Hartmann and Braun V17153-21

Isolating Driver Module

$135.00

In Stock

Qty Available: 5

New From Surplus Stock

Open Web Page

https://www.artisantg.com/96282-3

All trademarks, brandnames, and brands appearing herein are the property of their respective owners.

ARTISAN TECHNOLOGY GROUP

Your **definitive** source for quality pre-owned equipment.

Artisan Technology Group

(217) 352-9330 | sales@artisantg.com | artisantg.com

- Critical and expedited services
- In stock / Ready-to-ship
- We buy your excess, underutilized, and idle equipment
- Full-service, independent repair center

Artisan Scientific Corporation dba Artisan Technology Group is not an affiliate, representative, or authorized distributor for any manufacturer listed herein.

Contrans I – Interface Modules

Product Catalog

- Signal matching, binary or analog
- Electrical isolation of field signals
- HART compatible and FSK bus capable
- Clearly arranged instrumentation with plug-in modules
- Easy DCS coupling through standardized backplane

instrumentation

understanding measurement analysis control integration **optimization**

ABB

Contrans I
Interface Modules

Catalog 17.1 EN

Contrans I: Interface Modules

Introduction

Page

Contrans I – System description 4
General data 8

Binary Modules

Switch Amplifiers 9
Solenoid Drivers 19
Coupling Modules 27

Analog Modules

Input Isolators 31
Transmitters 67
Output Isolators 75

Monitoring Modules

Trip Amplifier 93

Sockets, Backplanes

Sockets, Backplanes 95
Dimensional drawings 105

Accessories

Cross Wiring Module 108
Straight Through Module 109
FSK Bus Amplifier 111
Programming Software 113
System cables 114
Power supply 115

Mounting and Installation Instructions

Safety instructions 118
Encoding 119

Contrans I – System description

In the field of process automation, the functionality of input or output modules of programmable logic control or distributed control systems is often inadequate for applications. For the ensuing signal matching between the field and control levels, the interface family Contrans I has a comprehensive program involving electrically isolated signal processing components for the supply of power to transmitters, for load increasing, for measuring temperatures, setting alarms, also including further modules for processing binary signals such as switch amplifiers, relays and optocouplers.

Analog modules are suitable for transmitting the HART field communication protocol. A central PC makes it possible to parameterize and centrally configure the underlying field unit level with the aid of special FSK bus amplifiers. All modules are optionally provided with intrinsically safe signal circuits.

Contrans I – Separation of wiring and function

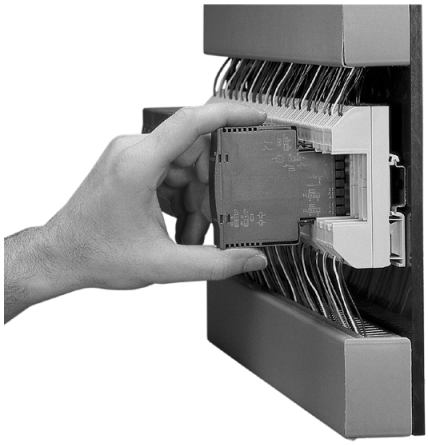

The Contrans I family stands out with its modular design, which permits electronic units to be plugged in a standard sockets or backplanes. Only the DIN rail sockets are required for wiring. This makes it easy to conduct functional matching even during the commissioning phase.

If maintenance becomes necessary, the defective module can be removed and replaced by just plugging the substitute into the standard socket. The replacement is done. There is no necessity to disconnect and reconnect wires. One source of error is thus removed. No expert is required.

In order to reduce the expenditure for planning and wiring, prewired backplanes for 8 or 16 plug-in function modules are provided. Power is fed from a central source. A multi-core system cable with two pluggable ends enables all modules to be connected directly to the input and output modules of the control unit.

The result: reduced expenditure for planning, documentation and wiring; also reduced time for installation, combined with extrem maintenance- and user-friendliness. All of these makes Contrans I a very cost-effective solution.

Contrans I – socket mounting

Type of modules for binary signals:

- Switch Amplifier
- Solenoid Driver
- Coupling Module

Type of modules for analog signals:

- Input Isolator
  - Loop Powered Supply
  - Isolating Power Supply
  - Input Isolator
  - Input Isolator, programmable
  - Universal Isolator
- Transmitter
  - Temperature Transmitter
  - Intelligent Transmitter
- Output Isolator
  - Loop Powered Isolator
  - Isolating Driver
- Trip Amplifier

The size of the modules depends to the functionality. The size 3 is not used today.

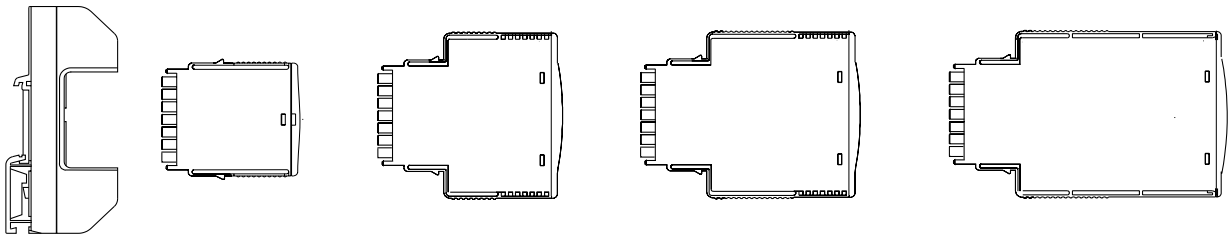

Module size 1 2 3 4

Contrans I – Backplane mounting

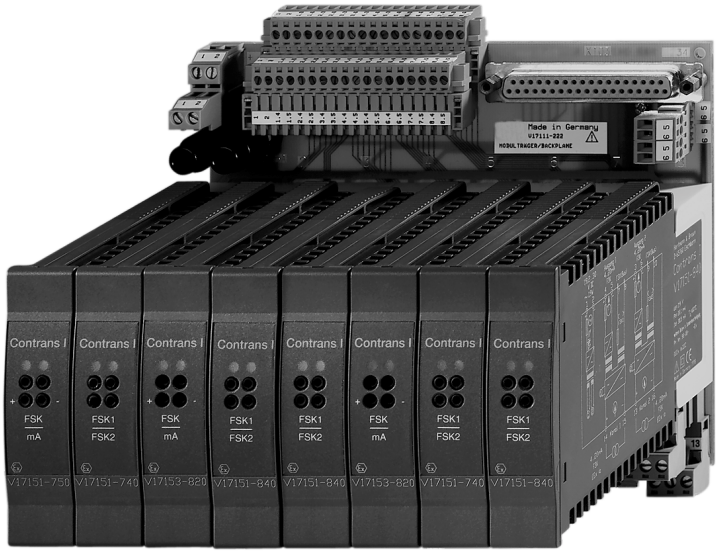

Type of Backplanes:

8-way

- 8 slots for modules
- 1 slot for the FSK bus amplifier (HART)
- Power supply with separate fusing for the power distribution to the modules and for the signals

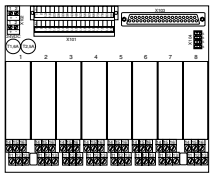

16-way

- 16 slots for modules
- 1 slot for the FSK bus amplifier (HART)
- Redundant power supply and separate fusing for the power distribution to the modules and for the signals. Dry contact for signalling of a fuse fault

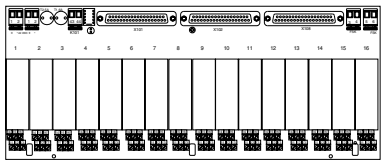

21-way

- 21 slots for modules
- 2 slots for the FSK bus amplifier (HART)
- Redundant power supply and separate fusing for the power distribution to the modules and for the signals. Dry contact for signalling of a fuse fault
- Especially design for using with 19“ racks

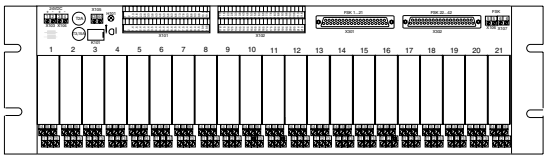

Customer-specified solutions

Backplanes can be fit according to customer requirements.

Module housing

Smallest amount of components to realise an effective production.
Labelling by laser beam and well-arranged mapping of the functions.

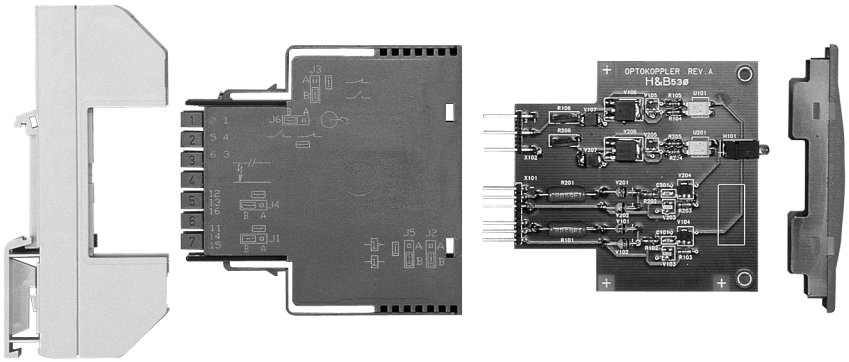

Module and sockets

Identical pinning of termination
- Power supply: terminals 1, 2
- Channel 1: terminals 4, 5 (control room side) 14, 15 (field side)
- Channel 2: terminals 3, 6 (control room side) 13, 16 (field side)

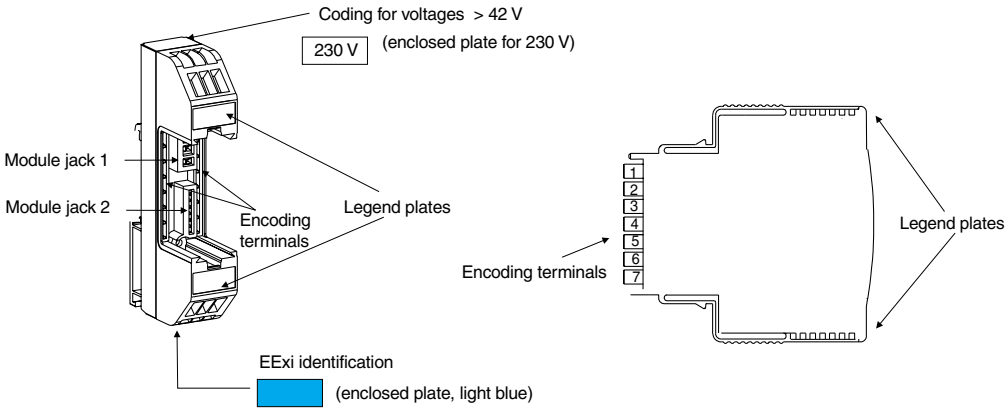

Encoding

The sockets on slots of the backplanes can be coded to avoid a mixup of modules. Break off the coding pin at the module and code with the encoding star the correspondend coding pins in the socket. Encoding stars are included in the delivery of sockets on backplanes.

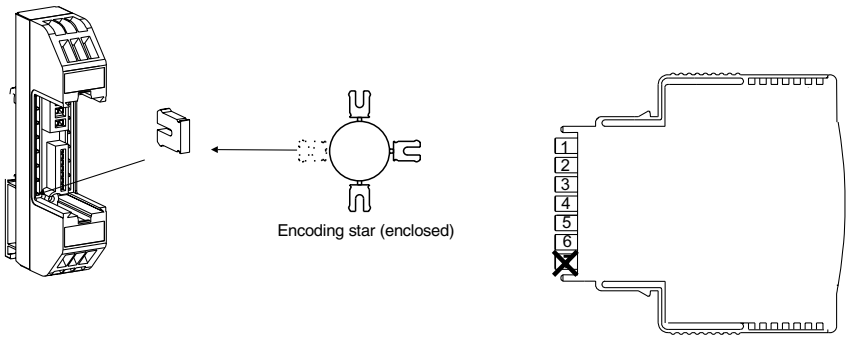

FSK bus: an system upgrade without additional effort

Independent HART communication is standard for all Contrans I backplanes. The FSK bus amplifier is only to plug-in and the analog HART FSK bus for one backplane is installed. Only wiring with 2 wires between all the backplanes is necessary to create a HART network. This can be also done as an upgrade in existing installations. The HART network can be connected through a HART modem to a personal computer. This HART network is independent of the running communication software. Of course the software "SMART VISION" is working with this HART network. This is the easiest way of HART communication and the best tool for service and maintenance in the plant.

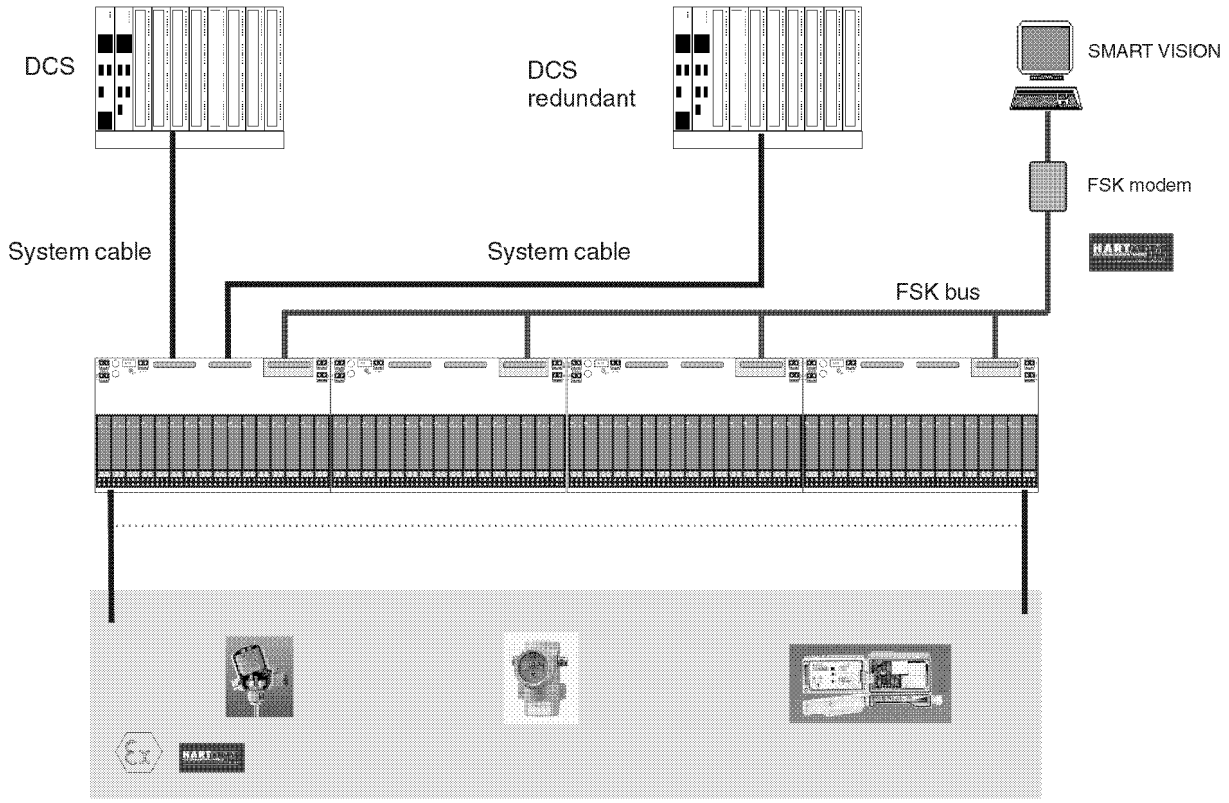

General data

Mounting
outside hazardous areas

Mounting orientation
vertical or horizontal

Storage temperature
-25...85 °C

Operating temperature
-20...60 °C; vertical mounting -20...55 °C
For the types V17151-74_, -75_, -34:
at vertical mounting -20...40 °C
(vertical mounting: top-hat rail vertical)

Relative humidity
< 85 %, 3K3 to IEC 721, part 3-3, no condensation

Explosion protection

Prozess inputs or outputs
[EEx ia] IIC or [EEx ia] IIB or [EEx ib] ...

Housing

Material
Polycarbonate

Fire protection class
V2 to UL 94 (DIN IEC 707)

Colour

Module	RAL 7043, dark grey
Socket, Backplane	RAL 7035, light grey

Contact material
Phosphorous bronze, gold-plated 0.8 µm

Mechanical features

Transport/shoc
30 g, 18 ms, 2M2 to DIN IEC 721, part 3-2

Function/Vibrations
2 g/± 0.15 mm/5...150 Hz/3 x 5 cycles
2 g/10 mm/1...35 Hz/3 x 1 cycle
3M2 to DIN IEC 721, part 3-3

Functional data

All Contrans I Modules meet the requirements of the EMC guideline 89/336/EWG and the low voltage 73/23/EWG

Behaviour of analog modules
Features for reference condtions to DIN IEC 770

Electromagnetic compatibility
DIN EN 50081-2 (1992)
DIN EN 50082-1 (1997)
DIN EN 50082-2 (1995) are met
NAMUR recommendation NE 21 is met

Functional modification through jumpers
The respective Data Sheets and block diagrams provides functional informations of the delivered device and matching possibilities of the modules.

The function can only be modified through jumpers off-line. To do this, remove the module from the socket or backplane. After removing the front panel with a screwdriver, the printed circuit board can be pulled out from the housing.

Safety data

DIN EN 61010-1; DIN VDE 0411, part 1

Overvoltage category
II

Degree of pollution
2

Type of protection to EN 60259/DIN VDE 0470, part 1
IP 20

Max. requirements on power supplies
(for backplanes with 16 modules and approx. 3.1 W power consumption)

Power supply	Max. inrush current < 100 µs	Rated current
19.2 V	6.4 A	3.1 A
24 V	8.0 A	2.5 A
30 V	9.9 A	2.0 A

Switch Amplifier

Switch Amplifier	2 channels	2 x relay outputs	V17131-13
Switch Amplifier	2 channels	2 x transistor outputs	V17131-16
Switch Amplifier Ex	1 channel	1 x relay output	V17131-51
Switch Amplifier Ex	1 channel	2 x relay outputs	V17131-52
Switch Amplifier Ex	2 channels	2 x relay outputs	V17131-53
Switch Amplifier Ex	1 channel	1 x transistor output	V17131-54
Switch Amplifier Ex	1 channel	2 x transistor outputs	V17131-55
Switch Amplifier Ex	2 channels	2 x transistor outputs	V17131-56

	Selection table		Switch amplifier							
			V17131-13	V17131-16	V17131-51	V17131-52	V17131-53	V17131-54	V17131-55	V17131-56
Control room	**Output**									
	Relay		x		x	x	x			
	Transistor			x				x	x	x
	Multi channel	amount of channels	2	2			2			2
	2. Output					x			x	
	Reversible signal flow direction		x	x	x	x	x	x	x	x
Field	**Input**									
	Sensor/actor	to DIN 19234 NAMUR	x	x	x	x	x	x	x	x
		Proximiy detector	x	x	x	x	x	x	x	x
		Switching contact	x	x	x	x	x	x	x	x
	Explosion protection	[EExia]IIC / [EExib]IIC			x/x	x/x	x/x	x/x	x/x	x/x
	Monitoring	Wire break	x	x	x	x	x	x	x	x
		Short circuit	x	x	x	x	x	x	x	x
General data	Power supply	19,2...30VDC	x	x	x	x	x	x	x	x
		95...253VAC	o¹	o¹	o¹	o¹	o¹	o¹	o¹	o¹
	Electrical galvanic isolation	Input-output	x	x	x	x	x	x	x	x
		Input-power supply	x	x	x	x	x	x	x	x
		Output-power supply	x	x	x	x	x	x	x	x
		Channel 1 - channel 2	x	x			x			x
	Modules fits for:									
	V17111-11, Socket		x	x	x	x	x	x	x	x
	V17111-12, Socket with power supply 24/24									
	V17111-13, Socket with power supply 230/24		x	x	x	x	x	x	x	x
	V17111-2_ _, Backplane 8 way		x	x	x	x	x	x	x	x
	V17111-3_ _, Backplane 16 way		x	x	x	x	x	x	x	x
	V17111-6_ _, Backplane 21 way		x	x	x	x	x	x	x	x

x = ok; o¹= only with V17111-13; o² = only with V17111-12, -13

Switch Amplifier

2 channels, 2 x relay outputs

V17131-13

- **Switching contacts, proximity detectors**
- **Electrical isolation between input, output and power supply**
- **Wire break and short-circuit monitoring**
- **Reversible signal flow direction**

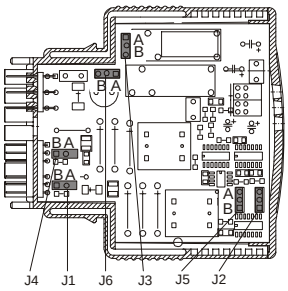

Module size 2

Module fits for:			
Socket		Backplane	
V17111-11	●	V17111-2 _ _	●
V17111-12	❍	V17111-3 _ _	●
V17111-13	●	V17111-6 _ _	●

Output per channel	
Contact load	250 V AC, cosφ > 0.7
	30 V DC, 2 A resistive load
Mech. life expectancy, operating cycles	> 3 · 10^7
Contact life frequency,	
operating cycles under load	> 10^6
Max. switching frequency	< 20 Hz
Start delay approx.	20 ms
Drop delay approx.	20 ms

Input per channel	
Rated voltage	to EN 50227, NAMUR
No load voltage approx.	7.8 V DC
Input resistance approx.	980 Ω
Short-circuit current approx.	7.9 mA
Switching span	1.2...2.1 mA
Overlap approx.	0.23 mA
Input pulse length	≥ 500 µs
Input pulse pause	≥ 500 µs
Line break monitoring (relay de-energized)	I < 150 mA
Short-circ. monitoring (relay de-energized)	R < 100 Ω

General data	
LED indicator, power “On“ (green)	
LED indicator, “Switching state relay“ (yellow)	
LED indicator, “Wire break/short-circuit“ (red)	
Max. ambient temperature	-20...+60 °C
Isolation	
Input – output – power supply	2.3 kV
Channel 1 – channel 2	1.35 kV
Weight	90 g
Power supply	
Rated voltage	19.2...30 V DC
Power consumption	0.94 W

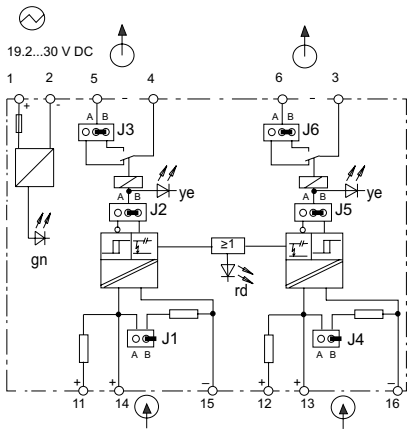

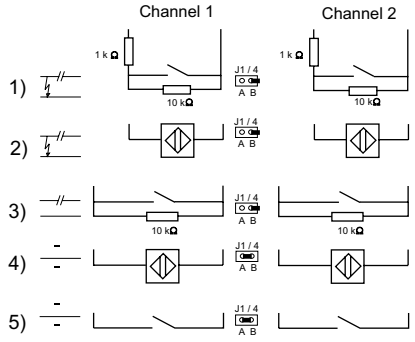

1) Contact with wire break and short-circuit monitoring
2) NAMUR transmitter with wire break and short-circuit monitoring
3) Contact with wire break monitoring
4) NAMUR transmitter without wire break and short-circuit monitoring
5) Contact without wire break and short-circuit monitoring

Functions of the plug-in jumpers J.:

Channel 1: J1, J2, J3
Channel 2: J4, J5, J6

J1/J4 Wire break monitoring
A = without, jumper plugged
B = with, jumper parked

J2/J5 Effective direction
A = inverse
B = direct

J3/J6 Relay output
A = NC contact
B = NO contact

The positions illustrated on the circuit diagram represent standard adjustments (delivery status)

ABB Automation Products GmbH · Borsigstr. 2 · D-63755 Alzenau · Phone +49(0)60 23 - 92 0 · Fax +49(0)60 23 - 92 33 00 · http://www.abb.com/automation

Subject to technical changes.

Printed in the Fed. Rep. of Germany 12.00

Switch Amplifier

V17131-16

2 channels, 2 x transistor outputs

- **Switching contacts, proximity detectors**
- **Electrical isolation between input, output and power supply**
- **Wire break and short-circuit monitoring**
- **Reversible signal flow direction**

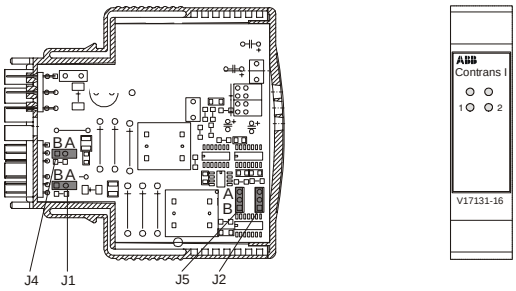

Module size 2

Output per channel	
Rated voltage	8...33 V DC
Rated current (limited current)	100 mA
Residual current	< 10 µA
Max. switching frequency	1 kHz
Start delay	< 500 µs
Drop delay	< 500 µs
Voltage drop	< 2.5 V
Input per channel	
Rated voltage	to EN 50227, NAMUR
No load voltage approx.	7.8 V DC
Input resistance approx.	980 Ω
Short-circuit current approx.	7.9 mA
Switching span	1.2...2.1 mA
Overlap approx.	0.23 mA
Input pulse length	≥ 500 µs
Input pulse pause	≥ 500 µs
Line break monitoring (output high-impedance)	I < 150 mA
Short-circuit monitoring (output high-impedance)	R < 100 Ω
General data	
LED indicator, power “On“ (green)	
LED indicator, “Switching state transistor“ (yellow)	
LED indicator, “Wire break/short-circuit“ (red)	
Max. ambient temperature	-20...+60 °C
Isolation	
Input – output – power supply	2.3 kV
Channel 1 – channel 2	1.35 kV
Weight	90 g
Power supply	
Rated voltage	19.2...30 V DC
Power consumption	0.62 W

Module fits for:

Socket		Backplane	
V17111-11	●	V17111-2 _ _	●
V17111-12	❍	V17111-3 _ _	●
V17111-13	●	V17111-6 _ _	●

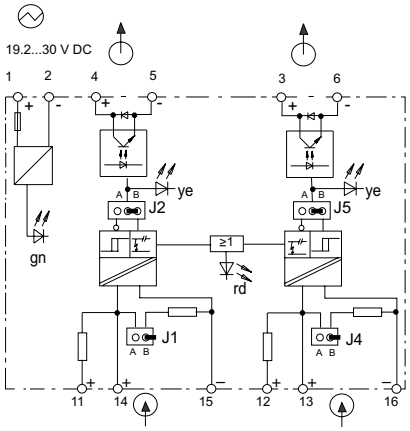

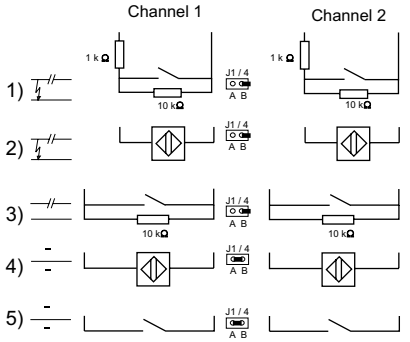

1) Contact with wire break and short-circuit monitoring
2) NAMUR transmitter with wire break and short-circuit monitoring
3) Contact with wire break monitoring
4) NAMUR transmitter without wire break and short-circuit monitoring
5) Contact without wire break and short-circuit monitoring

Functions of the plug-in jumpers J.:

Channel 1: J1, J2, J3
Channel 2: J4, J5, J6

J1/J4 Wire break monitoring
A = without, jumper plugged
B = with, jumper parked

J2/J5 Effective direction
A = inverse
B = direct

J3/J6 Transistor output
A = NC contact
B = NO contact

The positions illustrated on the circuit diagram represent standard adjustments (delivery status)

ABB Automation Products GmbH · Borsigstr. 2 · D-63755 Alzenau · Phone +49(0)60 23 - 92 0 · Fax +49(0)60 23 - 92 33 00 · http://www.abb.com/automation

Subject to technical changes.

Printed in the Fed. Rep. of Germany 12.00

Switch Amplifier Ex

1channel, 1 x relay output

V17131-51

- **Switching contacts, proximity detectors**
- **Electrical isolation between input, output and power supply**
- **Wire break and short-circuit monitoring**
- **Reversible signal flow direction**

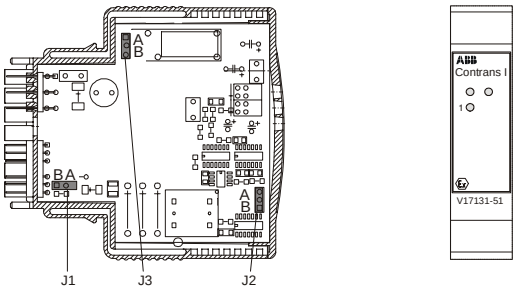

Module size 2

Module fits for:

Socket		Backplane	
V17111-11	●	V17111-2 _ _	●
V17111-12	❍	V17111-3 _ _	●
V17111-13	●	V17111-6 _ _	●

Output	(safe area)
Contact load	250 V AC, cosφ > 0.7
	30 V DC, 2 A resistive load
Mech. life expectancy, operating cycles	> $3 \cdot 10^7$
Contact life frequency,	
operating cycles under load	> 10^6
Max. switching frequency	20 Hz
Start delay approx.	20 ms
Drop delay approx.	20 ms
Input	(hazardous area)
Rated voltage	to EN 50227, NAMUR
No load voltage approx.	7.8 V DC
Input resistance approx.	980 Ω
Short-circuit current approx.	7.9 mA
Switching span	1.2...2.1 mA
Overlap approx.	0.23 mA
Input pulse length	≥ 500 µs
Input pulse pause	≥ 500 µs
Line break monitoring (relay de-energized)	I < 150 mA
Short-circ. monitoring (relay de-energized)	R < 100 Ω
Explosion protection	[EEx ia] IIC
Certificate of conformity	PTB 99 ATEX 2119X
Max. short-circuit current	I_o = 18 mA
Max. voltage	U_o = 10.6 V
Max. power	P_o = 48 mW
Permitted external inductance	L_a = 4 mH
Permitted external capacitance	C_a = 545 nF
General data	
LED indicator, power "On" (green)	
LED indicator, "Switching state relay" (yellow)	
LED indicator, "Wire break/short-circuit" (red)	
Max. ambient temperature	-20...+60 °C
Isolation	
Input – output – power supply	2.3 kV
Weight	90 g
Power supply	
Rated voltage	19.2...30 V DC
Power consumption	0.51 W

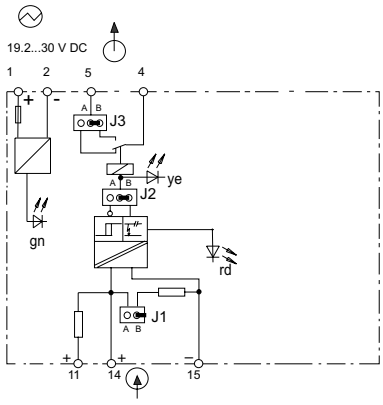

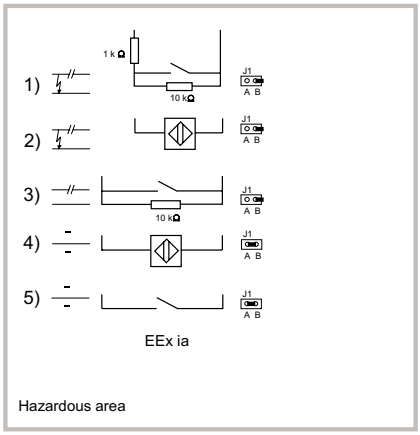

1) Contact with wire break and short-circuit monitoring
2) NAMUR transmitter with wire break and short-circuit monitoring
3) Contact with wire break monitoring
4) NAMUR transmitter without wire break and short-circuit monitoring
5) Contact without wire break and short-circuit monitoring

Functions of the plug-in jumpers J.:

J1 Wire break monitoring
A = without, jumper plugged
B = with, jumper parked

J2 Effective direction
A = inverse
B = direct

J3 Relay output
A = NC contact
B = NO contact

The positions illustrated on the circuit diagram represent standard adjustments (delivery status)

ABB Automation Products GmbH · Borsigstr. 2 · D-63755 Alzenau · Phone +49(0)60 23 - 92 0 · Fax +49(0)60 23 - 92 33 00 · http://www.abb.com/automation

Subject to technical changes.

Printed in the Fed. Rep. of Germany 12.00

Switch Amplifier Ex

1 channel, 2 x relay output

V17131-52

- **Switching contacts, proximity detectors**
- **Electrical isolation between input, output and power supply**
- **Wire break and short-circuit monitoring**
- **Reversible signal flow direction**

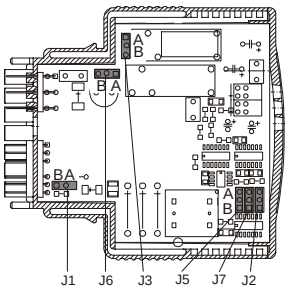

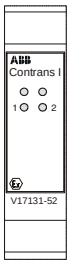

Module size 2

Output output 1/output 2	(safe area)
Contact load	250 V AC, cosφ > 0.7
	30 V DC, 2 A resistive load
Mech. life expectancy, operating cycles	> 3 · 10^7
Contact life frequency,	
operating cycles under load	> 10^6
Max. switching frequency	20 Hz
Start delay approx.	20 ms
Drop delay approx.	20 ms
Input per channel	(hazardous area)
Rated voltage	to EN 50227, NAMUR
No load voltage approx.	7.8 V DC
Input resistance approx.	980 Ω
Short-circuit current approx.	7.9 mA
Switching span	1.2...2.1 mA
Overlap approx.	0.23 mA
Input pulse length	≥ 500 µs
Input pulse pause	≥ 500 µs
Line break monitoring (relay de-energized)	I < 150 mA
Short-circ. monitoring (relay de-energized)	R < 100 Ω
Explosion protection	[EEx ia] IIC
Certificate of conformity	PTB 99 ATEX 2119X
Max. short-circuit current	I_o = 18 mA
Max. voltage	U_o = 10.6 V
Max. power	P_o = 48 mW
Permitted external inductance	L_a = 4 mH
Permitted external capacitance	C_a = 545 nF

General data

LED indicator, power "On" (green)	
LED indicator, "Switching state relay" (yellow)	
LED indicator, "Wire break/short-circuit" (red)	
Max. ambient temperature	-20...+60 °C
Isolation	
Input – output – power supply	2.3 kV
Channel 1 – channel 2	1.35 kV
Weight	90 g
Power supply	
Rated voltage	19.2...30 V DC
Power consumption	0.8 W

Module fits for:

Socket		Backplane	
V17111-11	●	V17111-2 _ _	●
V17111-12	❍	V17111-3 _ _	●
V17111-13	●	V17111-6 _ _	●

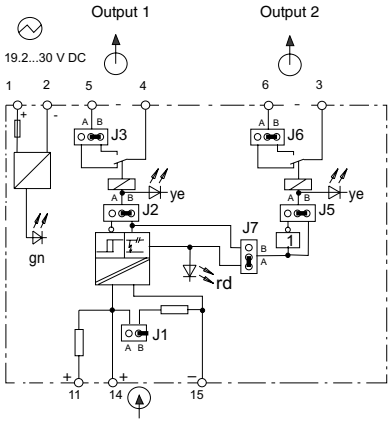

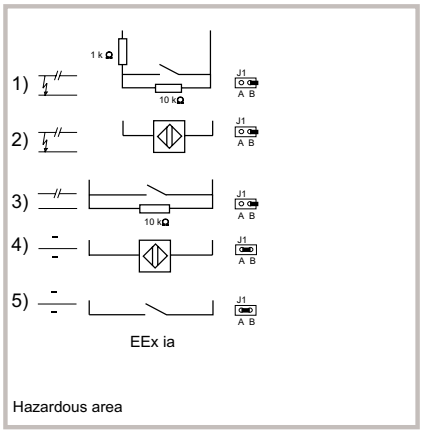

1) Contact with wire break and short-circuit monitoring
2) NAMUR transmitter with wire break and short-circuit monitoring
3) Contact with wire break monitoring
4) NAMUR transmitter without wire break and short-circuit monitoring
5) Contact without wire break and short-circuit monitoring

Functions of the plug-in jumpers J.:

J1 Wire break monitoring
A = without, jumper plugged
B = with, jumper parked

J2 Effective direction output 1
A = inverse
B = direct

J5 Effective direction output 2
A = invers
B = direct

J3/J6 Relay output 1/2
A = NC contact
B = NO contact

J7 Output 2
A = wire break and short-circuit monitoring (J5 set on position A)
B = set (as output 1)

The positions illustrated on the circuit diagram represent standard adjustments (delivery status)

ABB Automation Products GmbH · Borsigstr. 2 · D-63755 Alzenau · Phone +49(0)60 23 - 92 0 · Fax +49(0)60 23 - 92 33 00 · http://www.abb.com/automation

Subject to technical changes.

Printed in the Fed. Rep. of Germany 12.00

Switch Amplifier Ex

1 channel, 2 x relay output

V17131-53

- **Switching contacts, proximity detectors**
- **Electrical isolation between input, output and power supply**
- **Wire break and short-circuit monitoring**
- **Reversible signal flow direction**

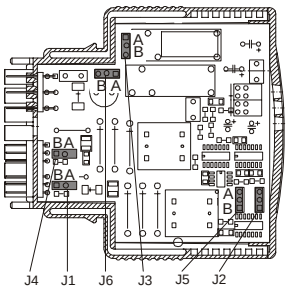

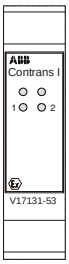

Module size 2

Output per channel	(safe area)
Contact load	250 V AC, cosφ > 0.7
	30 V DC, 2 A resistive load
Mech. life expectancy, operating cycles	> 3 · 10^7
Contact life frequency, operating cycles under load	> 10^6
Max. switching frequency	20 Hz
Start delay approx.	20 ms
Drop delay approx.	20 ms
Input per channel	(hazardous area)
Rated voltage	to EN 50227, NAMUR
No load voltage approx.	7.8 V DC
Input resistance approx.	980 Ω
Short-circuit current approx.	7.9 mA
Switching span	1.2...2.1 mA
Overlap approx.	0.23 mA
Input pulse length	≥ 500 µs
Input pulse pause	≥ 500 µs
Line break monitoring (relay de-energized)	I < 150 mA
Short-circ. monitoring (relay de-energized)	R < 100 Ω
Explosion protection	[EEx ia] IIC
Certificate of conformity	PTB 99 ATEX 2119X
Max. short-circuit current	I_o = 18 mA
Max. voltage	U_o = 10.6 V
Max. power	P_o = 48 mW
Permitted external inductance	L_a = 4 mH
Permitted external capacitance	C_a = 545 nF
General data	
LED indicator, power "On" (green)	
LED indicator, "Switching state relay" (yellow)	
LED indicator, "Wire break/short-circuit" (red)	
Max. ambient temperature	-20...+60 °C
Isolation	
Input – output – power supply	2.3 kV
Channel 1 – channel 2	1.35 kV
Weight	90 g
Power supply	
Rated voltage	19.2...30 V DC
Power consumption	0.94 W

Module fits for:

Socket		Backplane	
V17111-11	●	V17111-2 _ _	●
V17111-12	❍	V17111-3 _ _	●
V17111-13	●	V17111-6 _ _	●

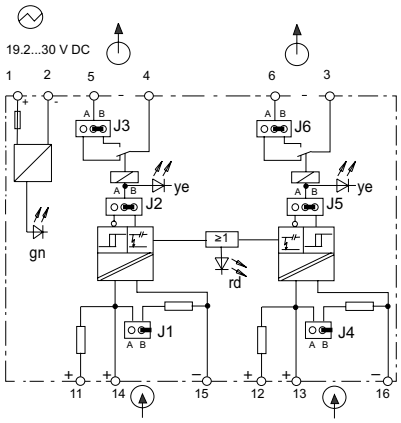

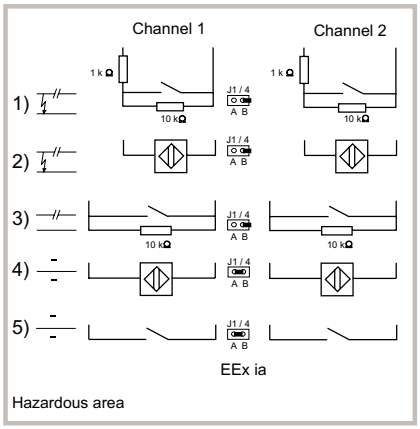

1) Contact with wire break and short-circuit monitoring
2) NAMUR transmitter with wire break and short-circuit monitoring
3) Contact with wire break monitoring
4) NAMUR transmitter without wire break and short-circuit monitoring
5) Contact without wire break and short-circuit monitoring

Functions of the plug-in jumpers J.:

Channel 1: J1, J2, J3
Channel 2: J4, J5, J6

J1/J4 Wire break monitoring
A = without, jumper plugged
B = with, jumper parked

J2/J5 Effective direction
A = inverse
B = direct

J3/J6 Relay output
A = NC contact
B = NO contact

The positions illustrated on the circuit diagram represent standard adjustments (delivery status)

ABB Automation Products GmbH · Borsigstr. 2 · D-63755 Alzenau · Phone +49(0)60 23 - 92 0 · Fax +49(0)60 23 - 92 33 00 · http://www.abb.com/automation

Subject to technical changes.

Printed in the Fed. Rep. of Germany 12.00

Switch Amplifier Ex

1 channel, 1 x transistor output

V17131-54

- **Switching contacts, proximity detectors**
- **Electrical isolation between input, output and power supply**
- **Wire break and short-circuit monitoring**
- **Reversible signal flow direction**

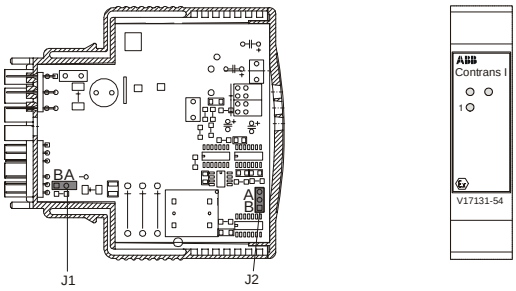

Module size 2

Module fits for:			
Socket		Backplane	
V17111-11	●	V17111-2 _ _	●
V17111-12	❍	V17111-3 _ _	●
V17111-13	●	V17111-6 _ _	●

Output	(safe area)
Rated voltage	8...33 V DC
Rated current (limited current)	100 mA
Residual current	< 10 µA
Max. switching frequency	1 kHz
Start delay	< 500 µs
Drop delay	< 500 µs
Voltage drop	< 2.5 V
Input	(hazardous area)
Rated voltage	to EN 50227, NAMUR
No load voltage approx.	7.8 V DC
Input resistance approx.	980 Ω
Short-circuit current approx.	7.9 mA
Switching span	1.2...2.1 mA
Overlap approx.	0.23 mA
Input pulse length	≥ 500 µs
Input pulse pause	≥ 500 µs
Line break monitoring (output high-impedance)	I < 150 mA
Short-circuit monitoring (output high-impedance)	R < 100 Ω
Explosion protection	[EEx ia] IIC
Certificate of conformity	PTB 99 ATEX 2119X
Max. short-circuit current	I_o = 18 mA
Max. voltage	U_o = 10.6 V
Max. power	P_o = 48 mW
Permitted external inductance	L_a = 4 mH
Permitted external capacitance	C_a = 545 nF
General data	
LED indicator, power “On“ (green)	
LED indicator, “Switching state transistor“ (yellow)	
LED indicator, “Wire break/short-circuit“ (red)	
Max. ambient temperature	-20...+60 °C
Isolation	
Input – output – power supply	2.3 kV
Weight	90 g
Power supply	
Rated voltage	19.2...30 V DC
Power consumption	0.35 W

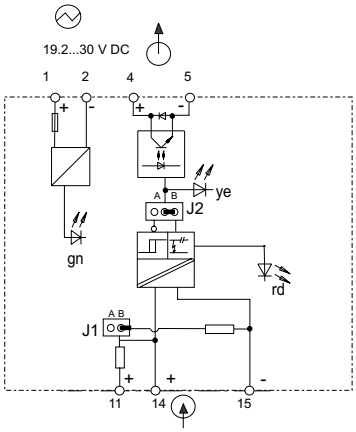

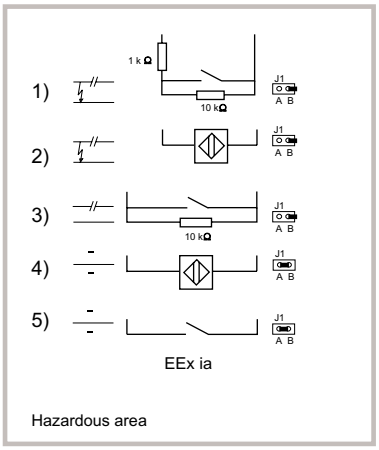

1) Contact with wire break and short-circuit monitoring
2) NAMUR transmitter with wire break and short-circuit monitoring
3) Contact with wire break monitoring
4) NAMUR transmitter without wire break and short-circuit monitoring
5) Contact without wire break and short-circuit monitoring

Functions of the plug-in jumpers J.:

J1 Wire break monitoring
A = without, jumper plugged
B = with, jumper parked

J2 Effective direction
A = inverse
B = direct

The positions illustrated on the circuit diagram represent standard adjustments (delivery status)

ABB Automation Products GmbH · Borsigstr. 2 · D-63755 Alzenau · Phone +49(0)60 23 - 92 0 · Fax +49(0)60 23 - 92 33 00 · http://www.abb.com/automation

Subject to technical changes.

Printed in the Fed. Rep. of Germany 12.00

Switch Amplifier Ex

1 channel, 2 x transistor output

V17131-55

- **Switching contacts, proximity detectors**
- **Electrical isolation between input, output and power supply**
- **Wire break and short-circuit monitoring**
- **Reversible signal flow direction**

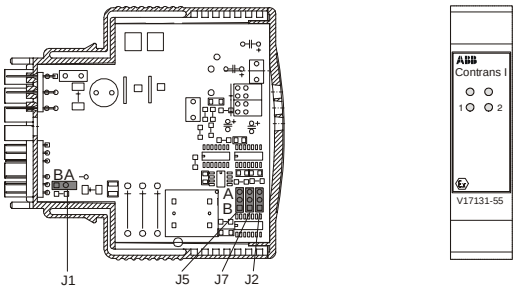

Module size 2

Output output 1/output 2	(safe area)
Rated voltage	8...33 V DC
Rated current (limited current)	100 mA
Residual current	< 10 µA
Max. switching frequency	1 kHz
Start delay	< 500 µs
Drop delay	< 500 µs
Voltage drop	< 2.5 V
Input per channel	(hazardous area)
Rated voltage	to EN 50227, NAMUR
No load voltage approx.	7.8 V DC
Input resistance approx.	980 Ω
Short-circuit current approx.	7.9 mA
Switching span	1.2...2.1 mA
Overlap approx.	0.23 mA
Input pulse length	≥ 500 µs
Input pulse pause	≥ 500 µs
Line break monitoring (output high-impedance)	I < 150 mA
Short-circuit monitoring (output high-impedance)	R < 100 Ω
Explosion protection	[EEx ia] IIC
Certificate of conformity	PTB 99 ATEX 2119X
Max. short-circuit current	I_o = 18 mA
Max. voltage	U_o = 10.6 V
Max. power	P_o = 48 mW
Permitted external inductance	L_a = 4 mH
Permitted external capacitance	C_a = 545 nF
General data	
LED indicator, power "On" (green)	
LED indicator, "Switching state transistor" (yellow)	
LED indicator, "Wire break/short-circuit" (red)	
Max. ambient temperature	-20...+60 °C
Isolation	
Input – output – power supply	2.3 kV
Channel 1 – channel 2	1.35 kV
Weight	90 g
Power supply	
Rated voltage	19.2...30 V DC
Power consumption	0.48 W

Module fits for:

Socket		Backplane	
V17111-11	●	V17111-2 _ _	●
V17111-12	❍	V17111-3 _ _	●
V17111-13	●	V17111-6 _ _	●

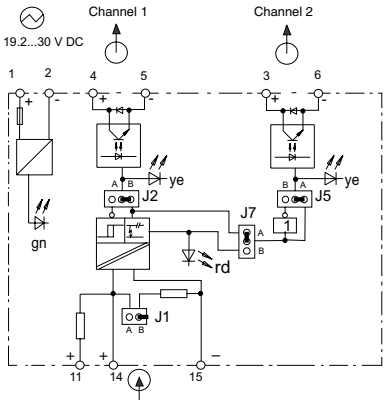

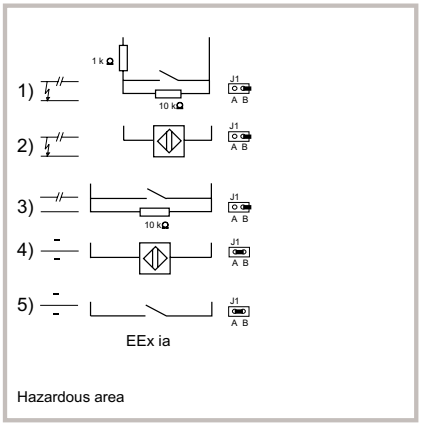

1) Contact with wire break and short-circuit monitoring
2) NAMUR transmitter with wire break and short-circuit monitoring
3) Contact with wire break monitoring
4) NAMUR transmitter without wire break and short-circuit monitoring
5) Contact without wire break and short-circuit monitoring

Functions of the plug-in jumpers J.:

J1 Wire break monitoring
A = without, jumper plugged
B = with, jumper parked

J2 Effective direction output 1
A = inverse
B = direct

J5 Effective direction output 2
A = invers
B = direct

J7 Output 2
A = wire break and short-circuit monitoring (J5 set on position A)
B = set (as output 1)

The positions illustrated on the circuit diagram represent standard adjustments (delivery status)

ABB Automation Products GmbH · Borsigstr. 2 · D-63755 Alzenau · Phone +49(0)60 23 - 92 0 · Fax +49(0)60 23 - 92 33 00 · http://www.abb.com/automation

Subject to technical changes.

Printed in the Fed. Rep. of Germany 12.00

Switch Amplifier Ex

2 channels, 2 x transistor output

V17131-56

- **Switching contacts, proximity detectors**
- **Electrical isolation between input, output and power supply**
- **Wire break and short-circuit monitoring**
- **Reversible signal flow direction**

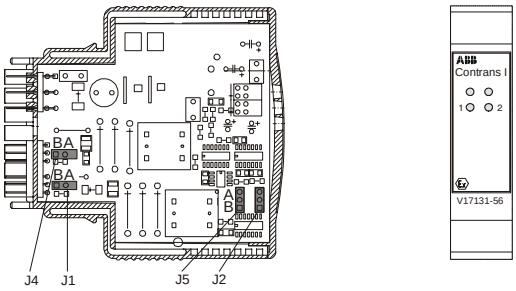

Module size 2

Module fits for:

Socket		Backplane	
V17111-11	●	V17111-2 _ _	●
V17111-12	❍	V17111-3 _ _	●
V17111-13	●	V17111-6 _ _	●

Output per channel	(safe area)
Rated voltage	8...33 V DC
Rated current (limited current)	100 mA
Residual current	< 10 µA
Max. switching frequency	1 kHz
Start delay	< 500 µs
Drop delay	< 500 µs
Voltage drop	< 2.5 V
Input per channel	(hazardous area)
Rated voltage	to EN 50227, NAMUR
No load voltage approx.	7.8 V DC
Input resistance approx.	980 Ω
Short-circuit current approx.	7.9 mA
Switching span	1.2...2.1 mA
Overlap approx.	0.23 mA
Input pulse length	≥ 500 µs
Input pulse pause	≥ 500 µs
Line break monitoring (output high-impedance)	I < 150 mA
Short-circuit monitoring (output high-impedance)	R < 100 Ω
Explosion protection	[EEx ia] IIC
Certificate of conformity	PTB 99 ATEX 2119X
Max. short-circuit current	I_o = 18 mA
Max. voltage	U_o = 10.6 V
Max. power	P_o = 48 mW
Permitted external inductance	L_a = 4 mH
Permitted external capacitance	C_a = 545 nF
General data	
LED indicator, power "On" (green)	
LED indicator, "Switching state transistor" (yellow)	
LED indicator, "Wire break/short-circuit" (red)	
Max. ambient temperature	-20...+60 °C
Isolation	
Input – output – power supply	2.3 kV
Channel 1 – channel 2	1.35 kV
Weight	90 g
Power supply	
Rated voltage	19.2...30 V DC
Power consumption	0.62 W

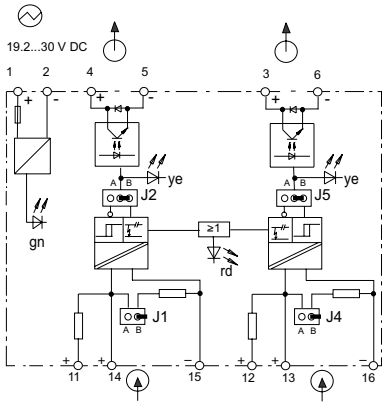

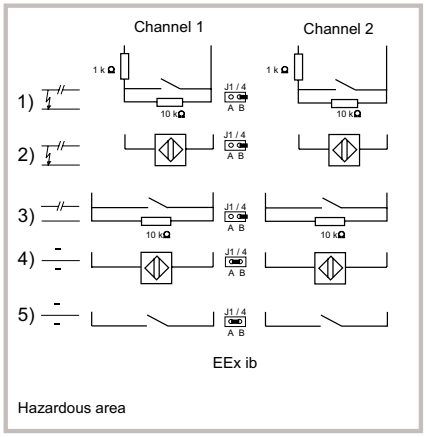

1) Contact with wire break and short-circuit monitoring
2) NAMUR transmitter with wire break and short-circuit monitoring
3) Contact with wire break monitoring
4) NAMUR transmitter without wire break and short-circuit monitoring
5) Contact without wire break and short-circuit monitoring

Functions of the plug-in jumpers J.:

Channel 1: J1, J2
Channel 2: J4, J5

J1/J4 Wire break monitoring
A = without, jumper plugged
B = with, jumper parked

J2/J5 Effective direction
A = inverse
B = direct

The positions illustrated on the circuit diagram represent standard adjustments (delivery status)

ABB Automation Products GmbH · Borsigstr. 2 · D-63755 Alzenau · Phone +49(0)60 23 - 92 0 · Fax +49(0)60 23 - 92 33 00 · http://www.abb.com/automation

Subject to technical changes.

Printed in the Fed. Rep. of Germany 12.00

Solenoid Drivers

Solenoid Drivers Ex	8/20	V17132-51
Solenoid Drivers Ex	13/45	V17132-52
Solenoid Drivers Ex	15/47	V17132-53
Solenoid Drivers Ex	17.5/36	V17132-54
Solenoid Drivers Ex	19/32	V17132-55
Solenoid Drivers Ex	21/25	V17132-56

Selection table			Solenoid driver					
			V17132-51	V17132-52	V17132-53	V17132-54	V17132-55	V17132-56
Control room	**Input**							
	Logig/direct		x	x	x	x	x	x
	Contact		x	x	x	x	x	x
	2nd Output	short circuit signal	x	x	x	x	x	x
Field	**Output**							
	Sensor/actor	Solenoid valve	x	x	x	x	x	x
		Audiple alarms / LED annunciators	x	x	x	x	x	x
	Explosion protection	[EExia]IIC / [EExib]IIC	-/x	-/x	-/x	-/x	-/x	-/x
	Short circuit monitoring		x	x	x	x	x	x
	Rated voltage [V]		8	13	15	17,5	19	21
	Rated current [mA]		20	45	47	36	32	25
General data	Power supply	19,2...30VDC	x	x	x	x	x	x
		20...253VAC/DC	o¹	o¹	o¹	o¹	o¹	o¹
	Electrical galvanic isolation	Output - input /power supply	x	x	x	x	x	x
		Input - power supply	o²	o²	o²	o²	o²	o²
	Modules fits for:							
	V17111-11, Socket		x	x	x	x	x	x
	V17111-12, Socket with power supply 24/24		x	x	x	x	x	x
	V17111-13, Socket with power supply 230/24		x	x	x	x	x	x
	V17111-2_ _, Backplane 8 way		x	x	x	x	x	x
	V17111-3_ _, Backplane 16 way		x	x	x	x	x	x
	V17111-6_ _, Backplane 21 way		x	x	x	x	x	x

x = ok; o¹= only with V17111-13; o² = only with V17111-12, -13

Solenoid Driver Ex

8 V/20 mA

V17132-51

- **Actuation of intrinsically safe solenoid valves, alarm sounders, LED indicators**
- **Logic input**
- **With or without additional power supply**
- **Electrical isolation input/output**

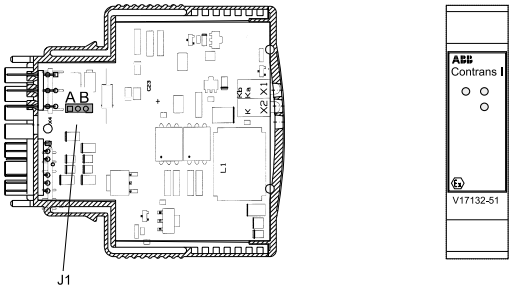

Module size 2

Module fits for:			
Socket		Backplane	
V17111-11	●	V17111-2 _ _	●
V17111-12	●	V17111-3 _ _	●
V17111-13	●	V17111-6 _ _	●

Input	(safe area)
Logic (terminals 4/5, jumper J1 = A)	
Signal level L (output “Off“)	0...3 V
Signal level H (output “On“)	12...30 V
Direct (terminal 4/5, jumper J1 = B)	
Signal level (output “Off“)	< 3 V
Signal level (output “On“)	19.2...30 V
Contact (terminal 3/4)	
Signal level floating	
Short-circuit signal (terminal 5/6)	
Voltage H (open collector)	12...30 V

Output	(hazardous area)
Rated voltage	8 V
Rated current	20 mA
Switching frequency (logic)	< 200 Hz
Switching frequency (direct)	< 10 Hz
Residual ripple	< 200 mV
Explosion protection	[EEx ib] IIC
Certificate of conformity	PTB 99 ATEX 2118X
Max. short-circuit current	I_o = 32.2 mA
Max. voltage	U_o = 10.5 V
Max. power	P_o = 340 mW
Permitted external inductance	L_a = 4 mH
Permitted external capacitance	C_a = 400 nF

General data	
LED indicators, power “On“ (green)	
LED indicators, “Switching state“ (yellow)	
LED indicators, “Short-circuit“ (red)	
Isolation	
Input – output	2.3 kV
Max. ambient temperature	-20...+60 °C
Weight	90 g
Power supply	
Rated voltage	19.2...30 V DC
Power consumption	0.6 W

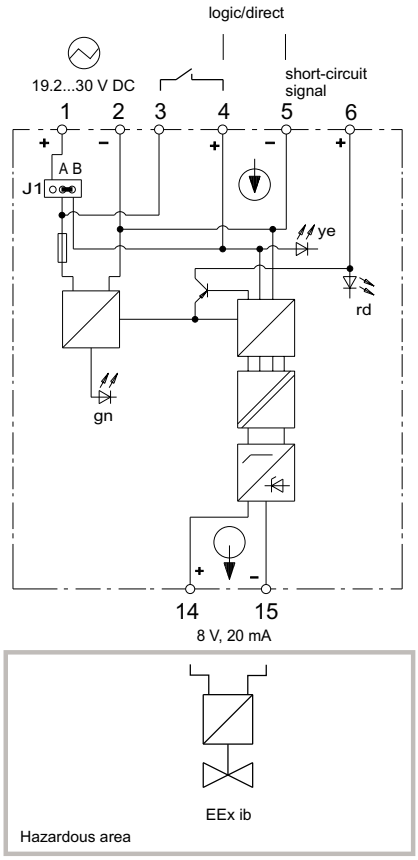

Functions of the plug-in jumpers J.:

J1 Input circuit
A = contact/logic
B = direct
(without additional power supply)

The positions illustrated on the circuit diagram represent standard adjustments (delivery status)

ABB Automation Products GmbH · Borsigstr. 2 · D-63755 Alzenau · Phone +49(0)60 23 - 92 0 · Fax +49(0)60 23 - 92 33 00 · http://www.abb.com/automation

Subject to technical changes.

Printed in the Fed. Rep. of Germany 12.00

Solenoid Driver Ex

13 V/45 mA

V17132-52

- **Actuation of intrinsically safe solenoid valves, alarm sounders, LED indicators**
- **Logic input**
- **With or without additional power supply**
- **Electrical isolation input/output**

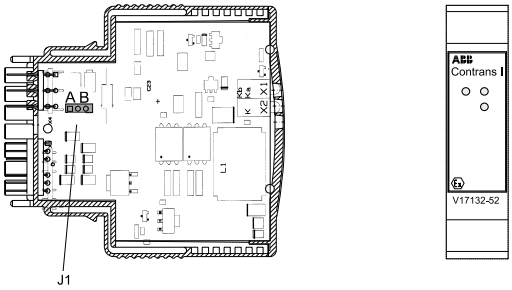

Module size 2

Module fits for:

Socket		Backplane	
V17111-11	●	V17111-2 _ _	●
V17111-12	●	V17111-3 _ _	●
V17111-13	●	V17111-6 _ _	●

Input	(safe area)
Logic (terminals 4/5, jumper J1 = A)	
Signal level L (output “Off“)	0...3 V
Signal level H (output “On“)	12...30 V
Direct (terminal 4/5, jumper J1 = B)	
Signal level (output “Off“)	< 3 V
Signal level (output “On“)	19.2...30 V
Contact (terminal 3/4)	
Signal level floating	
Short-circuit signal (terminal 5/6)	
Voltage H (open collector)	12...30 V

Output	(hazardous area)
Rated voltage	13 V
Rated current	45 mA
Switching frequency (logic)	< 200 Hz
Switching frequency (direct)	< 10 Hz
Residual ripple	< 200 mV
Explosion protection	[EEx ib] IIC
Certificate of conformity	PTB 99 ATEX 2118X
Max. short-circuit current	I_o = 52 mA
Max. voltage	U_o = 15.8 V
Max. power	P_o = 820 mW
Permitted external inductance	L_a = 1.5 mH
Permitted external capacitance	C_a = 160 nF

General data	
LED indicators, power “On“ (green)	
LED indicators, “Switching state“ (yellow)	
LED indicators, “Short-circuit“ (red)	
Isolation	
Input – output	2.3 kV
Max. ambient temperature	-20...+60 °C
Weight	90 g
Power supply	
Rated voltage	19.2...30 V DC
Power consumption	1.5 W

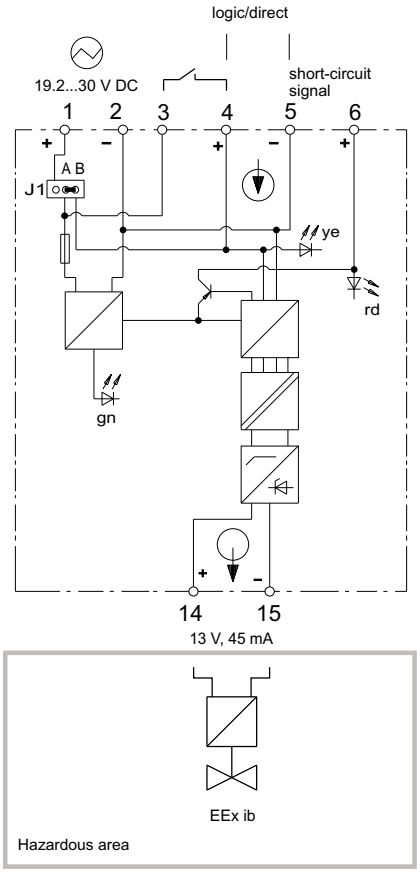

Functions of the plug-in jumpers J.:

J1 Input circuit
A = contact/logic
B = direct
(without additional power supply)

The positions illustrated on the circuit diagram represent standard adjustments (delivery status)

ABB Automation Products GmbH · Borsigstr. 2 · D-63755 Alzenau · Phone +49(0)60 23 - 92 0 · Fax +49(0)60 23 - 92 33 00 · http://www.abb.com/automation

Subject to technical changes.

Printed in the Fed. Rep. of Germany 12.00

Solenoid Driver Ex

15 V/47 mA

V17132-53

- **Actuation of intrinsically safe solenoid valves, alarm sounders, LED indicators**
- **Logic input**
- **With or without additional power supply**
- **Electrical isolation input/output**

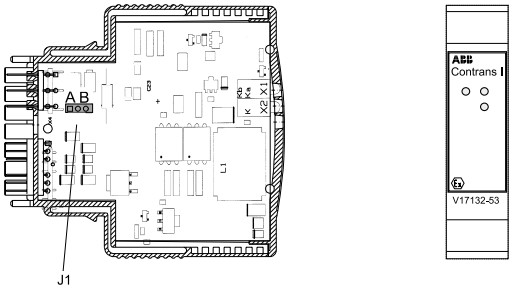

Module size 2

Module fits for:			
Socket		Backplane	
V17111-11	●	V17111-2 _ _	●
V17111-12	●	V17111-3 _ _	●
V17111-13	●	V17111-6 _ _	●

Input	(safe area)
Logic (terminals 4/5, jumper J1 = A)	
Signal level L (output “Off“)	0...3 V
Signal level H (output “On“)	12...30 V
Direct (terminal 4/5, jumper J1 = B)	
Signal level (output “Off“)	< 3 V
Signal level (output “On“)	19.2...30 V
Contact (terminal 3/4)	
Signal level floating	
Short-circuit signal (terminal 5/6)	
Voltage H (open collector)	12...30 V

Output	(hazardous area)
Rated voltage	15 V
Rated current	47 mA
Switching frequency (logic)	< 200 Hz
Switching frequency (direct)	< 10 Hz
Residual ripple	< 200 mV
Explosion protection	[EEx ib] IIC
Certificate of conformity	PTB 99 ATEX 2118X
Max. short-circuit current	I_o = 59.4 mA
Max. voltage	U_o = 17.5 V
Max. power	P_o = 1040 mW
Permitted external inductance	L_a = 0.9 mH
Permitted external capacitance	C_a = 120 nF

General data	
LED indicators, power “On“ (green)	
LED indicators, “Switching state“ (yellow)	
LED indicators, “Short-circuit“ (red)	
Isolation	
Input – output	2.3 kV
Max. ambient temperature	-20...+60 °C
Weight	90 g
Power supply	
Rated voltage	19.2...30 V DC
Power consumption	1.5 W

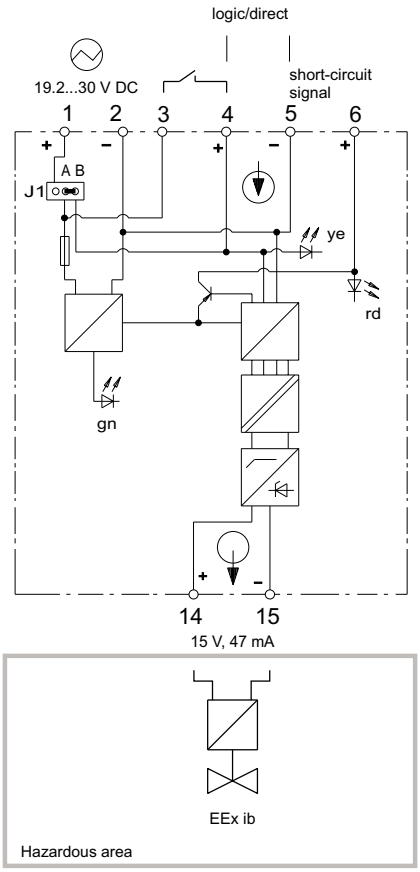

Functions of the plug-in jumpers J.:

J1 Input circuit
A = contact/logic
B = direct
(without additional power supply)

The positions illustrated on the circuit diagram represent standard adjustments (delivery status)

ABB Automation Products GmbH · Borsigstr. 2 · D-63755 Alzenau · Phone +49(0)60 23 - 92 0 · Fax +49(0)60 23 - 92 33 00 · http://www.abb.com/automation

Subject to technical changes.

Printed in the Fed. Rep. of Germany 12.00

Solenoid Driver Ex

17.5 V/36 mA

V17132-54

- **Actuation of intrinsically safe solenoid valves, alarm sounders, LED indicators**
- **Logic input**
- **With or without additional power supply**
- **Electrical isolation input/output**

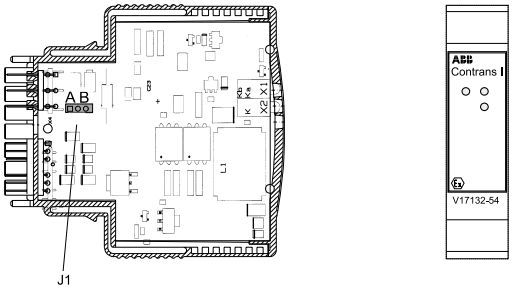

Module size 2

Module fits for:			
Socket		Backplane	
V17111-11	●	V17111-2 _ _	●
V17111-12	●	V17111-3 _ _	●
V17111-13	●	V17111-6 _ _	●

Input	(safe area)
Logic (terminals 4/5, jumper J1 = A)	
Signal level L (output “Off“)	0...3 V
Signal level H (output “On“)	12...30 V
Direct (terminal 4/5, jumper J1 = B)	
Signal level (output “Off“)	< 3 V
Signal level (output “On“)	19.2...30 V
Contact (terminal 3/4)	
Signal level floating	
Short-circuit signal (terminal 5/6)	
Voltage H (open collector)	12...30 V

Output	(hazardous area)
Rated voltage	17.5 V
Rated current	36 mA
Switching frequency (logic)	< 200 Hz
Switching frequency (direct)	< 10 Hz
Residual ripple	< 200 mV
Explosion protection	[EEx ib] IIC
Certificate of conformity	PTB 99 ATEX 2118X
Max. short-circuit current	I_o = 45 mA
Max. voltage	U_o = 21 V
Max. power	P_o = 950 mW
Permitted external inductance	L_a = 0.6 mH
Permitted external capacitance	C_a = 79 nF

General data	
LED indicators, power “On“ (green)	
LED indicators, “Switching state“ (yellow)	
LED indicators, “Short-circuit“ (red)	
Isolation	
Input – output	2.3 kV
Max. ambient temperature	-20...+60 °C
Weight	90 g
Power supply	
Rated voltage	19.2...30 V DC
Power consumption	1.5 W

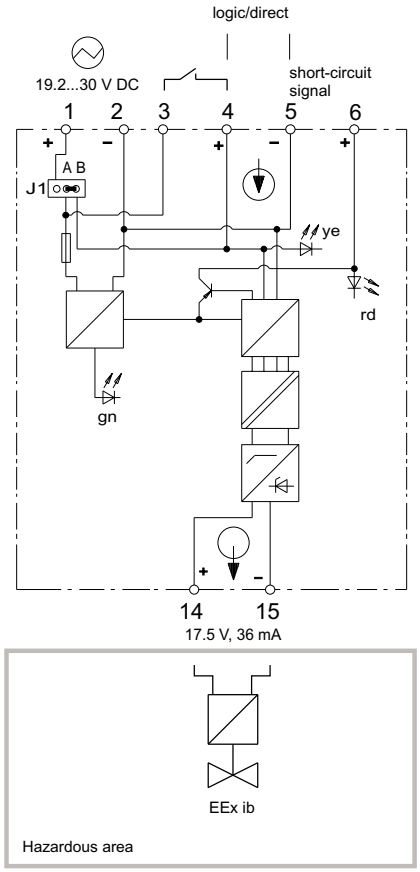

Functions of the plug-in jumpers J.:

J1 Input circuit
A = contact/logic
B = direct
(without additional power supply)

The positions illustrated on the circuit diagram represent standard adjustments (delivery status)

ABB Automation Products GmbH · Borsigstr. 2 · D-63755 Alzenau · Phone +49(0)60 23 - 92 0 · Fax +49(0)60 23 - 92 33 00 · http://www.abb.com/automation

Subject to technical changes.

Printed in the Fed. Rep. of Germany 12.00

Solenoid Driver Ex

19 V/32 mA

V17132-55

- **Actuation of intrinsically safe solenoid valves, alarm sounders, LED indicators**
- **Logic input**
- **With or without additional power supply**
- **Electrical isolation input/output**

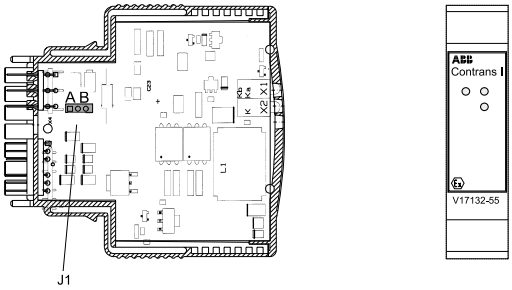

Module size 2

Module fits for:

Socket		Backplane	
V17111-11	●	V17111-2 _ _	●
V17111-12	●	V17111-3 _ _	●
V17111-13	●	V17111-6 _ _	●

Input	(safe area)
Logic (terminals 4/5, jumper J1 = A)	
Signal level L (output “Off“)	0...3 V
Signal level H (output “On“)	12...30 V
Direct (terminal 4/5, jumper J1 = B)	
Signal level (output “Off“)	< 3 V
Signal level (output “On“)	19.2...30 V
Contact (terminal 3/4)	
Signal level floating	
Short-circuit signal (terminal 5/6)	
Voltage H (open collector)	12...30 V

Output	(hazardous area)
Rated voltage	19 V
Rated current	32 mA
Switching frequency (logic)	< 200 Hz
Switching frequency (direct)	< 10 Hz
Residual ripple	< 200 mV
Explosion protection	[EEx ib] IIC
Certificate of conformity	PTB 99 ATEX 2118X
Max. short-circuit current	I_o = 41 mA
Max. voltage	U_o = 21 V
Max. power	P_o = 860 mW
Permitted external inductance	L_a = 0.8 mH
Permitted external capacitance	C_a = 76 nF

General data	
LED indicators, power “On“ (green)	
LED indicators, “Switching state“ (yellow)	
LED indicators, “Short-circuit“ (red)	
Isolation	
Input – output	2.3 kV
Max. ambient temperature	-20...+60 °C
Weight	90 g
Power supply	
Rated voltage	19.2...30 V DC
Power consumption	1.5 W

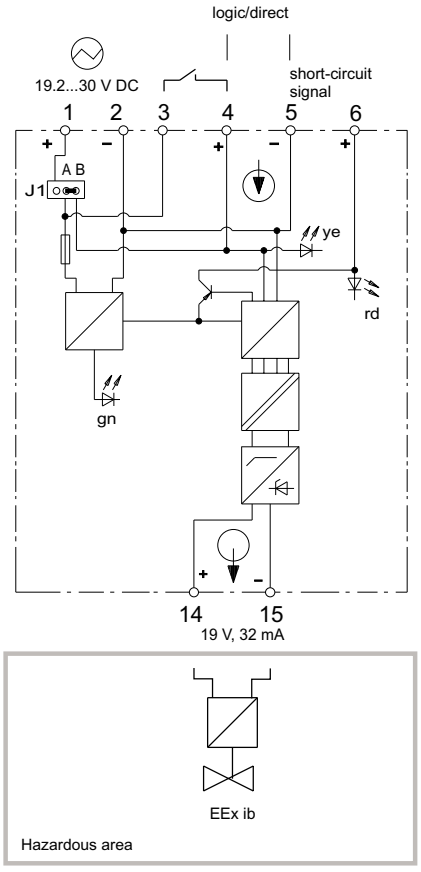

Functions of the plug-in jumpers J.:

J1 Input circuit
A = contact/logic
B = direct
(without additional power supply)

The positions illustrated on the circuit diagram represent standard adjustments (delivery status)

ABB Automation Products GmbH · Borsigstr. 2 · D-63755 Alzenau · Phone +49(0)60 23 - 92 0 · Fax +49(0)60 23 - 92 33 00 · http://www.abb.com/automation

Subject to technical changes.

Printed in the Fed. Rep. of Germany 12.00

Solenoid Driver Ex

21 V/25 mA

V17132-56

- **Actuation of intrinsically safe solenoid valves, alarm sounders, LED indicators**
- **Logic input**
- **With or without additional power supply**
- **Electrical isolation input/output**

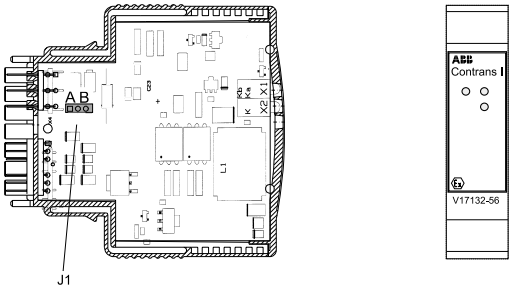

Module size 2

Module fits for:

Socket		Backplane	
V17111-11	●	V17111-2 _ _	●
V17111-12	●	V17111-3 _ _	●
V17111-13	●	V17111-6 _ _	●

Input	(safe area)
Logic (terminals 4/5, jumper J1 = A)	
Signal level L (output “Off“)	0...3 V
Signal level H (output “On“)	12...30 V
Direct (terminal 4/5, jumper J1 = B)	
Signal level (output “Off“)	< 3 V
Signal level (output “On“)	19.2...30 V
Contact (terminal 3/4)	
Signal level floating	
Short-circuit signal (terminal 5/6)	
Voltage H (open collector)	12...30 V

Output	(hazardous area)
Rated voltage	21 V
Rated current	25 mA
Switching frequency (logic)	< 200 Hz
Switching frequency (direct)	< 10 Hz
Residual ripple	< 200 mV
Explosion protection	[EEx ib] IIC
Certificate of conformity	PTB 99 ATEX 2118X
Max. short-circuit current	I_o = 32.2 mA
Max. voltage	U_o = 24.2 V
Max. power	P_o = 780 mW
Permitted external inductance	L_a = 0.5 mH
Permitted external capacitance	C_a = 47 nF

General data	
LED indicators, power “On“ (green)	
LED indicators, “Switching state“ (yellow)	
LED indicators, “Short-circuit“ (red)	
Isolation	
Input – output	2.3 kV
Max. ambient temperature	-20...+60 °C
Weight	90 g
Power supply	
Rated voltage	19.2...30 V DC
Power consumption	1.5 W

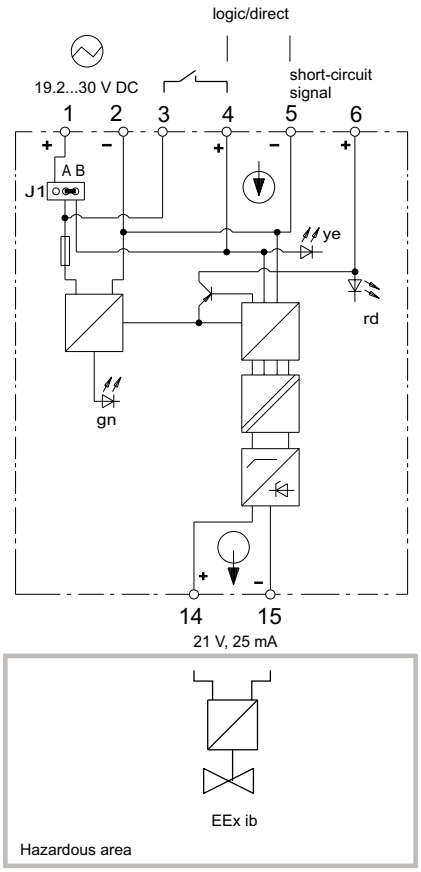

Functions of the plug-in jumpers J.:

J1 Input circuit
A = contact/logic
B = direct
(without additional power supply)

The positions illustrated on the circuit diagram represent standard adjustments (delivery status)

ABB Automation Products GmbH · Borsigstr. 2 · D-63755 Alzenau · Phone +49(0)60 23 - 92 0 · Fax +49(0)60 23 - 92 33 00 · http://www.abb.com/automation

Subject to technical changes.

Printed in the Fed. Rep. of Germany 12.00

Coupling Modules

Optocoupler	2 channels	V17133-11
Switch Relay	2 channels	V17133-21
Switch Relay Ex	2 channels	V17133-510

Optocoupler

2 channels

V17133-11

- **Electrical isolation of control signals**
- **Matching to various of voltage levels**
- **Input with protection against wrong polarity**

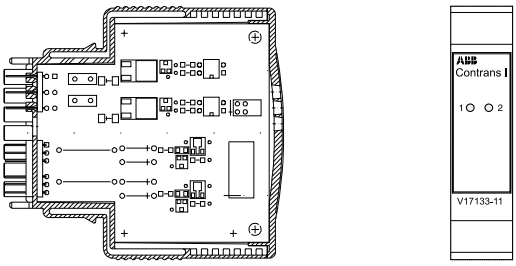

Module size 2

Output	
Rated voltage	8...33 V DC
Rated current (limited current)	< 100 mA
Residual current	< 10 µA
Switching frequency	≤ 1 kHz
Voltage drop	< 2.5 V
Protected against wrong polarity up to ± 80 V	

Input	
Signal level H	12...33 V DC
Signal level L	-30...+3 V DC
Input current	< 2.8 mA

General data	
LED indicator, switching state “transistor“ (yellow)	
Isolation per channel	
Input – output	3.7 kV
Isolation channel 1 – channel 2	
Input 1 – input 2	820 V
Output 1 – output 2	2.3 kV
Max. ambient temperature	-20...+60 °C
Weight	90 g

Module fits for:

Socket		Backplane	
V17111-11	●	V17111-2 _ _	●
V17111-12	❍	V17111-3 _ _	●
V17111-13	❍	V17111-6 _ _	●

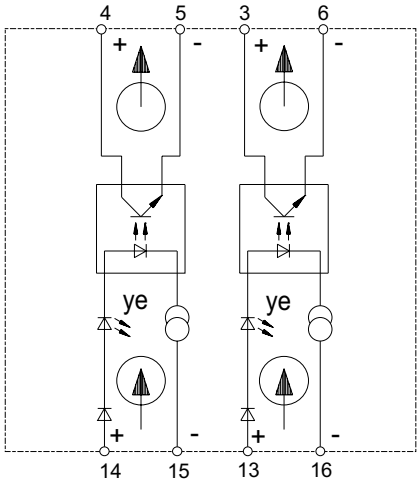

Channel 1 Channel 2

ABB Automation Products GmbH · Borsigstr. 2 · D-63755 Alzenau · Phone +49(0)60 23 - 92 0 · Fax +49(0)60 23 - 92 33 00 · http://www.abb.com/automation

Subject to technical changes.

Printed in the Fed. Rep. of Germany 12.00

Switch Relay

2 channels

V17133-21

- **Electrical isolation of control signals**
- **Matching to various of voltage levels**
- **Level conversion**
- **With or without contact protection circuit**

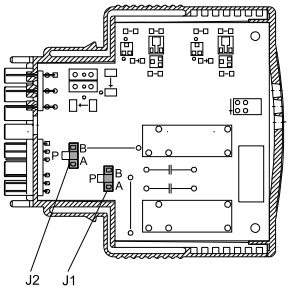

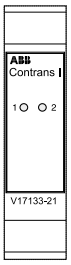

Module size 2

Module fits for:			
Socket		Backplane	
V17111-11	●	V17111-2 _ _	●
V17111-12	❍	V17111-3 _ _	●
V17111-13	❍	V17111-6 _ _	●

Input	
Signal level H	15...30 V DC
Signal level L	-30...+3 V DC
Input current	< 24 mA
Protected against wrong polarity up to ± 80 V	

Output	
Contact load AC/cosφ	250 V, 1 A/> 0,7
Contact load DC/resistive load	30 V, 2 A
Mech. life expectancy, operating cycles	> 3 · 10^7
Contact life frequency, operating cycles under load	> 10^6
Spark quenching unit	100 Ω/22 nF
Switching frequency	< 20 Hz
Start delay	< 10 ms
Drop delay	< 10 ms
Contact material	AgcdO

General data	
LED indicator, switching state “Relais“ (yellow)	
Isolation per channel	
Coil – contact	2,3 kV
Isolation channel 1 – channel 2	
Contact 1 – contact 2	2.3 kV
Coil 1 – coil 2	820 V
Max. ambient temperature	-20...+60 °C
Weight	90 g

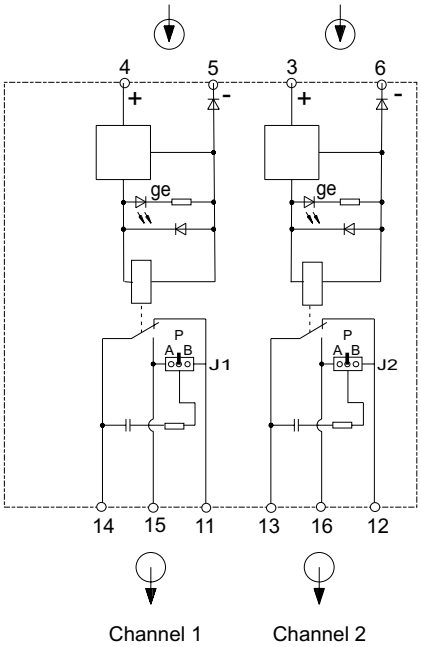

Functions of the plug-in jumpers J.:

J1/J2 Spark quenching units
A = with, NO contact channel 1/2
B = with, NC contact channel 1/2
B = without (park position)

The positions illustrated on the circuit diagram represent standard adjustments (delivery status)

ABB Automation Products GmbH · Borsigstr. 2 · D-63755 Alzenau · Phone +49(0)60 23 - 92 0 · Fax +49(0)60 23 - 92 33 00 · http://www.abb.com/automation

Subject to technical changes.

Printed in the Fed. Rep. of Germany 12.00

Switch Relay Ex

2 channels

V17133-510

- **Electrical isolation of control signals**
- **Matching to various of voltage levels**
- **Level conversion**

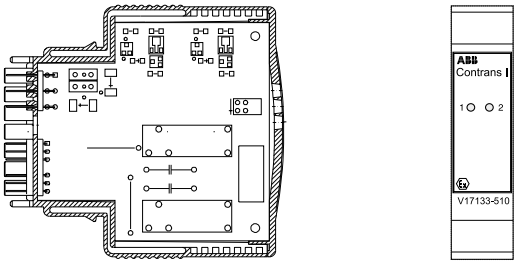

Module size 2

Module fits for:			
Socket		Backplane	
V17111-11	●	V17111-2 _ _	●
V17111-12	❍	V17111-3 _ _	●
V17111-13	❍	V17111-6 _ _	●

Input	
Signal level H	15...30 V DC
Signal level L	-30...+3 V DC
Input current	< 24 mA
Protected against wrong polarity up to ± 80 V	

Output	
Contact load AC/cosφ	250 V, 1 A/> 0,7
Contact load DC/resistive load	30 V, 2 A
Mech. life expectancy, operating cycles	$> 3 \cdot 10^7$
Contact life frequency, operating cycles under load	$> 10^6$
Spark quenching unit	100 Ω/22 nF
Switching frequency	< 20 Hz
Start delay	< 10 ms
Drop delay	< 10 ms
Contact material	AgcdO
Explosion protection	[EEx ia] IIC
Certificate of conformity	PTB 99 ATEX 2067 X
Max. voltage	U_i = 55 V U_i = 40 V U_i = 37 V
Max. current	I_i=800 mA I_i = 1,5 A I_i = 2 A

General data	
LED indicator, switching state “relay“ (yellow)	
Isolation per channel	
Coil – contact	2.3 kV
Isolation channel 1 – channel 2	
Contact 1 – contact 2	2.3 kV
Coil 1 – coil 2	820 V
Max. ambient temperature	-20...+60 °C
Weight	90 g

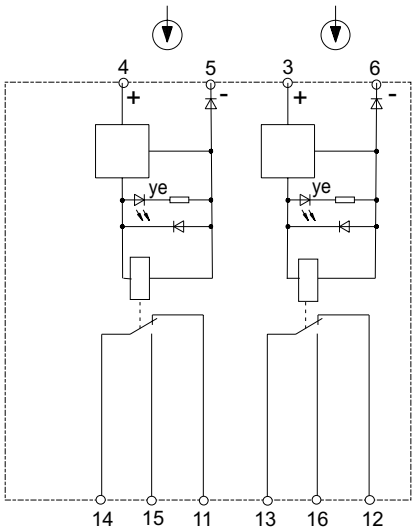

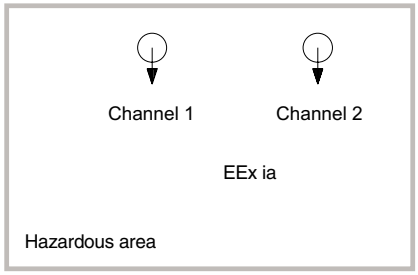

ABB Automation Products GmbH · Borsigstr. 2 · D-63755 Alzenau · Phone +49(0)60 23 - 92 0 · Fax +49(0)60 23 - 92 33 00 · http://www.abb.com/automation

Subject to technical changes.

Printed in the Fed. Rep. of Germany 12.00

Input Isolators

Power Supply Module	2 channels	V17151-100
Loop Powered Supply	1 channel	V17151-11
Loop Powered Supply	2 channels	V17151-13
Isolating Power Supply	1 channel	V17151-21_
Isolating Power Supply	1 channel, HART	V17151-22_
Isolating Power Supply	1 channel, HART, FSK bus	V17151-320
Isolating Power Supply	1 channel, HART	V17151-325
Isolating Power Supply	2 channels, HART, FSK bus	V17151-340
Isolating Power Supply	2 outputs, HART, FSK bus	V17151-350
Loop Powered Input Isolator	2 channels	V17151-413
Input Isolator	1 channel, HART, FSK bus	V17151-420
Input Isolator, programmable	1 channel, V, mA	V17151-43_
Input Isolator, universal		V17151-480
Loop Powered Supply Ex	1 channel	V17151-51
Loop Powered Supply Ex	1 channel, HART	V17151-52
Isolating Power Supply Ex	1 channel	V17151-61_
Isolating Power Supply Ex	1 channel, HART	V17151-62_
Isolating Power Supply Ex	1 channel, HART, FSK bus	V17151-720
Isolating Power Supply Ex	1 channel, HART	V17151-725
Isolating Power Supply Ex	2 channels, HART, FSK bus	V17151-740
Isolating Power Supply Ex	2 channels, HART	V17151-745
Isolating Power Supply Ex	2 ourputs, HART, FSK bus	V17151-750
Isolating Power Supply Ex	2 outputs, HART	V17151-755
Input Isolator Ex	1 channel, HART, FSK bus	V17151-820
Input Isolator Ex	1 channel, HART	V17151-825
Input Isolator Ex	2 channels, HART, FSK bus	V17151-840
Input Isolator Ex	2 channels, HART	V17151-845

	Selection table			Loop powered supply		Isolating power supply											Input isolator							Loop powered supply Ex		Isolating power supply Ex												Input isolator Ex			
																			programmable																						
			V17151-100	V17151-11	V17151-13	V17151-210	V17151-211	V17151-212	V17151-213	V17151-220	V17151-221	V17151-222	V17151-320	V17151-325	V17151-340	V17151-350	V17151-413	V17151-420	V17151-430	V17151-432	V17151-433	V17151-434	V17151-480	V17151-51	V17151-52	V17151-610	V17151-611	V17151-612	V17151-613	V17151-620	V17151-621	V17151-622	V17151-720	V17151-725	V17151-740	V17151-745	V17151-750	V17151-755	V17151-820	V17151-825	V17151-840	V17151-845
Control room	**Output**																																								
	Analog signal	0...20mA					x				x						x		x				x				x				x											
		4...20mA	x	x	x	x				x			x	x	x	x	x	x	x				x	x	x	x				x			x	x	x	x	x	x	x	x	x	x
		0...5mA							x								x				x		x						x													
		0(2)...10V						x				x								x			x					x				x										
		0(1)...5V																				x	x																			
		± 10V																					x																			
		± 20mA																					x																			
	Output signal with FSK signal		x							x				x											x					x	x	x		x		x		x		x		x
	Output signal free of FSK signal												x		x	x		x															x		x		x		x		x	
	Multichannel	Channels	2		2										2		2																		2	2				2	2
	2 Outputs															x																					x	x				
	Wire break monitoring					x				x																																
	Relay output																		x	x	x	x																				
Field	**Input**																																								
	Sensor / actor	0...20mA															x		x	x	x	x	x																			
		4...20mA				x	x	x	x								x	x	x	x	x	x	x																x	x	x	x
		4...20mA with supply voltage 20mA,24V [V]	21,6	18,3	18,3	14	14	14	14	14	14	14	15,5	15,5	15,5	15,5								13,5	13,5	14	14	14	14	14	14	14	15,5	15,5	15,5	15,5	15,5	15,5				
		FSK(HART)								x	x	x	x	x	x	x		x							x					x	x	x	x	x	x	x	x	x	x	x	x	x
		0...5mA															x		x	x	x	x	x																			
		0/2...10V																	x	x	x	x	x																			
		0/1...5V																	x	x	x	x	x																			
		± 10V																	x	x	x	x	x																			
		± 20mA																					x																			
		± 25mA																	x	x	x	x	x																			
		± 12,5 V																	x	x	x	x	x																			
		≤ 200 V																					x																			
		≤ 100mA																					x																			
	Explosion protection	[EExia]IIC / [EExib]IIC																						-/x	-/x	-/x	-/x	-/x	-/x	-/x	-/x	-/x	x/x	x/x	x/x	x/x	x/x	x/x	x/x	x/x	x/x	x/x
	Wire break monitoring					x				x																																
General data	Power supply	19,2...30VDC	x			x	x	x	x	x	x	x	x	x	x	x		x	x	x	x	x				x	x	x	x	x	x	x	x	x	x	x	x	x	x	x	x	x
		95...253VAC	o¹			o¹	o¹	o¹	o¹	o¹	o¹	o¹		o¹					o¹	o¹	o¹	o¹				o¹	o¹	o¹	o¹	o¹	o¹	o¹										
		20...253VAC/DC																					x																			
	Electrical galvanic isolation	Input - output / power supply		x	x	x	x	x	x	x	x	x	x	x			x	x	x	x	x	x	x	x	x	x	x	x	x	x	x	x	x	x	x	x	x	x	x	x	x	x
		Output - power supply				o²	o²	o²	o²	o²	o²	o²	x	x	x	x		x	o²	o²	o²	o²	x			x	x	x	x	x	x	x	x	x	x	x	x	x	x	x	x	x
		Output (4...20mA) -FSK											x	x	x	x		x															x	x	x	x	x	x	x	x	x	x
		Channel 1 - channel 2 (output 2)			x										x	x	x																		x	x	x	x			x	x
	Programmable	via PC-software																	x	x	x	x																				
		via DIP-Schalter																					x																			
	Kommunikation	Point to point (FSK -HART)	x							x	x	x	x	x	x	x		x												x	x	x	x	x	x	x	x	x	x	x	x	x
		FSK -Bus (HART)											x		x	x		x															x		x		x		x		x	
	Test jacks	mA											x	x		x		x															x	x			x	x	x	x		
		FSK											x	x	x	x		x															x	x	x	x	x	x	x	x	x	x
	Modules fits for:																																								
	V17111-11, Socket		x	x	x	x	x	x	x	x	x	x		x			x	x	x	x	x	x	x	x	x	x	x	x	x	x	x	x	x	x	x	x	x	x	x	x	x	x
	V17111-12, Socket with power supply 24/24		x			x	x	x	x	x	x	x							x	x	x	x				x	x	x	x	x	x	x										
	V17111-13, Socket with power supply 230/24		x			x	x	x	x	x	x	x						x	x	x	x	x				x	x	x	x	x	x	x										
	V17111-2_ _, Backplane 8 way		x	x	x	x	x	x	x	x	x	x	x	x	x	x	x	x	x	x	x	x	x	x	x	x	x	x	x	x	x	x	x	x	x	x	x	x	x	x	x	x
	V17111-3_ _, Backplane 16 way		x	x	x	x	x	x	x	x	x	x	x	x	x	x	x	x	x	x	x	x	x	x	x	x	x	x	x	x	x	x	x	x	x	x	x	x	x	x	x	x
	V17111-6_ _, Backplane 21 way		x	x	x	x	x	x	x	x	x	x	x	x	x	x	x	x	x	x	x	x	x	x	x	x	x	x	x	x	x	x	x	x	x	x	x	x	x	x	x	x

x = ok; o¹= only with V17111-13; o² = only with V17111-12, -13

Power Supply Module V17151-100

2 channels

- **Power supply for loop powered transmitter**
- **2 channels or 1 channel with FSK connection**

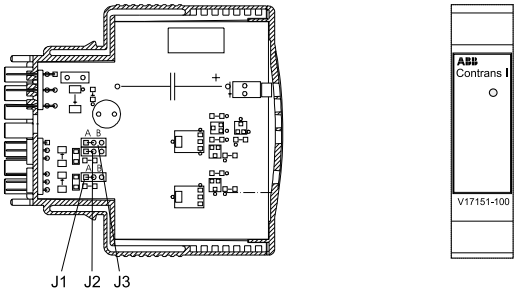

Module size 2

Module fits for:			
Socket		Backplane	
V17111-11	●	V17111-2 _ _	●
V17111-12	●	V17111-3 _ _	●
V17111-13	●	V17111-6 _ _	●

Output

Output current (short-circuit proof)	0...20 mA
Transformation ratio	1:1

Input

Input current	4...20 mA
Supply voltage	rated voltage -2.3 V (J1/J2 = A)
(U_v = 24 V, R_b = 50 Ω, I = 20 mA)	rated voltage -7.1 V (J1/J2 = B)
Short-circuit current	24...35 mA
Overranging	> 23.6 mA

General data

Voltage drop per channel	
(U_v = 24 V, R_b = 0 Ω, I = 20 mA)	1 V (A), 6 V (B)
Max. ambient temperature	-20...+60 °C
Weight	90 g
Power supply	
Rated voltage	19.2...30 V DC
Power consumption	1 W
Performance under reference conditions	
Response time	< 50 ms

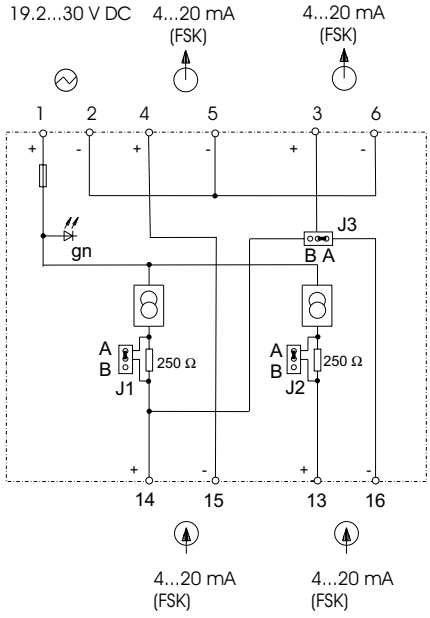

Functions of the plug-in jumpers J.:

J1/J2 HART communication
A = without resistance 250 Ω
B = with resistance 250 Ω

J3 Channels
A = 2 channels
B = 1 channel with FSK output (terminal 3/6)

The positions illustrated on the circuit diagram represent standard adjustments (delivery status)

ABB Automation Products GmbH · Borsigstr. 2 · D-63755 Alzenau · Phone +49(0)60 23 - 92 0 · Fax +49(0)60 23 - 92 33 00 · http://www.abb.com/automation

Subject to technical changes.

Printed in the Fed. Rep. of Germany 12.00

■ **Electrical isolation for current signal with transmitter power supply**

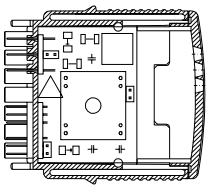

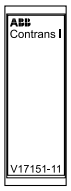

Module size 1

Module fits for:			
Socket		Backplane	
V17111-11	●	V17111-2 _ _	●
V17111-12	❍	V17111-3 _ _	●
V17111-13	❍	V17111-6 _ _	●

Output	
Output current (short-circuit proof)	4...20 mA
Transformation ratio	1:1
Detect. of wire break (input)	< 400 µA
Supply voltage	18.5...30 V

Input	
Input current (short-circuit proof)	4...20 mA
Supply voltage	≥ 12.8...24.3 V
Short-circuit current	24...35 mA

General data	
Voltage drop at 20 mA	< 5.7 V
Isolation	
Input – output	1.35 kV
Max. ambient temperature	-20...+60 °C
Weight	40 g
Performance under reference conditions	
Linearity deviation	< 0.1 %
Error limit	< 0.3 %
Temperature effect	< 0.1 %/10 K
Impedance effect	< 0.18 %
Response time	< 50 ms

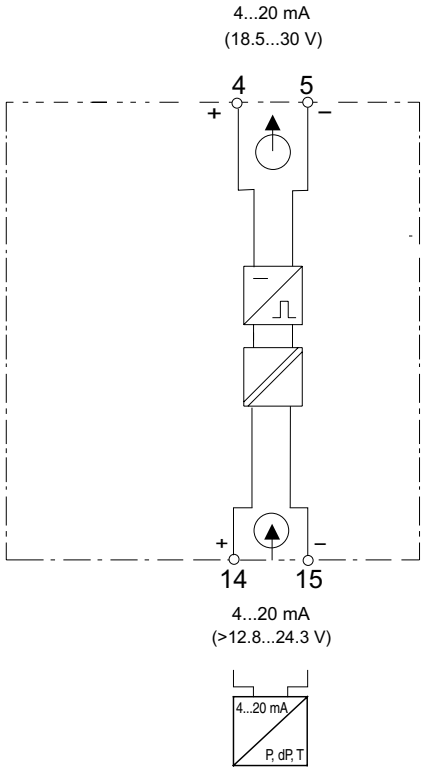

ABB Automation Products GmbH · Borsigstr. 2 · D-63755 Alzenau · Phone +49(0)60 23 - 92 0 · Fax +49(0)60 23 - 92 33 00 · http://www.abb.com/automation

Subject to technical changes.

Printed in the Fed. Rep. of Germany 12.00

■ **Electrical isolation for current signal with transmitter power supply**

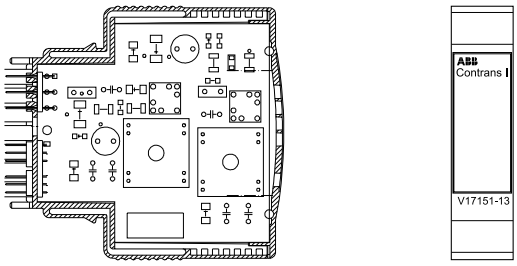

Module size 2

Output per channel	
Output current (short-circuit proof)	4...20 mA
Transformation ratio	1:1
Detect. of wire break (input)	< 400 µA
Supply voltage	18.5...30 V

Module fits for:

Socket		Backplane	
V17111-11	●	V17111-2 _ _	●
V17111-12	❍	V17111-3 _ _	●
V17111-13	❍	V17111-6 _ _	●

Input per channel	
Input current (short-circuit proof)	4...20 mA
Supply voltage	≥ 12.8...24.3 V
Short-circuit current	24...35 mA

General data	
Voltage drop at 20 mA	< 5.7 V
Isolation	
Input – output	1.35 kV
Channel 1 – channel 2	500 V
Max. ambient temperature	-20...+60 °C
Weight	90 g
Performance under reference conditions	
Linearity deviation	< 0.1 %
Error limit	< 0.3 %
Temperature effect	< 0.1 %/10 K
Impedance effect	< 0.18 %
Response time	< 50 ms

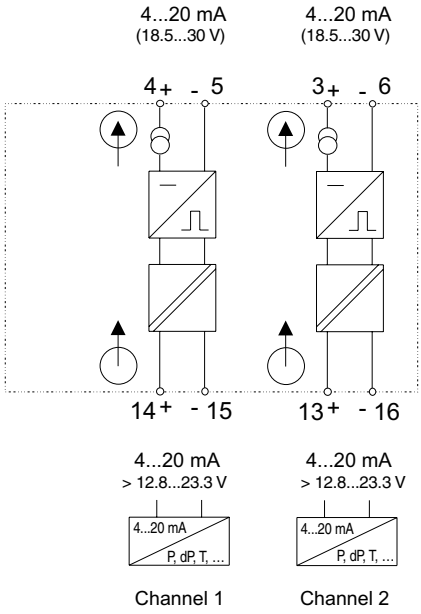

ABB Automation Products GmbH · Borsigstr. 2 · D-63755 Alzenau · Phone +49(0)60 23 - 92 0 · Fax +49(0)60 23 - 92 33 00 · http://www.abb.com/automation

Subject to technical changes.

Printed in the Fed. Rep. of Germany 12.00

ABB Automation Products GmbH · Borsigstr. 2 · D-63755 Alzenau · Phone +49(0)60 23 - 92 0 · Fax +49(0)60 23 - 92 33 00 · http://www.abb.com/automation

Subject to technical changes.

Printed in the Fed. Rep. of Germany 12.00

Isolating Power Supply

1 channel

V17151-21_

- **Power supply for loop powered transmitters**
- **Isolating driver for 4...20 mA**
- **Wire break monitoring output overrange/underrange (Jumper J1)**

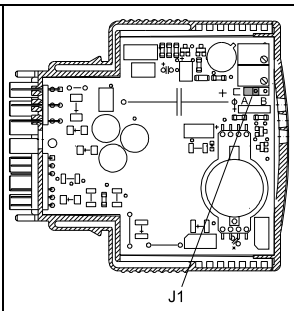

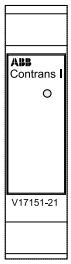

Module size 2

Module fits for:

Socket		Backplane	
V17111-11	●	V17111-2 _ _	●
V17111-12	●	V17111-3 _ _	●
V17111-13	●	V17111-6 _ _	●

Output

Transformation ratio	1:1
Residual ripple (peak-to-peak)	< 0.25 %
Output signal short-circuit proof	

Type	Signal	Wire break	Short-circuit	Load
V17151-210	4...20 mA	< 0.1 > 22 mA	23...30 mA	0...600 Ω
V17151-211	0...20 mA	0 > 22 mA	23...30 mA	0...600 Ω
V17151-212	0...10 V	0 > 11 V	–	> 10 kΩ
V17151-213	0... 5 mA	0 > 5.13 mA	–	0...2.4 kΩ

Input

Input current	4...20 mA
Short circuit current	23...30 mA
Residual ripple (peak-to-peak)	< 100 mV
Isolating power supply (terminal 14/15)	
Supply voltage at 22.7 mA	≥ 14 V
Isolating driver (terminal 13/16)	
Voltage drop	< 1 V

General data

LED indicators, power “On“ (green)	
Isolation	
Input – output/power supply	2.3 kV
Max. ambient temperature	-20...+60 °C
Weight	90 g
Power supply	
Rated voltage	19.2...30 V DC
Power consumption	1.05 W
Performance under reference conditions	
Linearity deviation	< 0.1 %
Error limit	< 0.25 %
Temperature effect	< 0.1 %/10 K
Impedance effect	< 0.05 %
Response time	< 50 ms

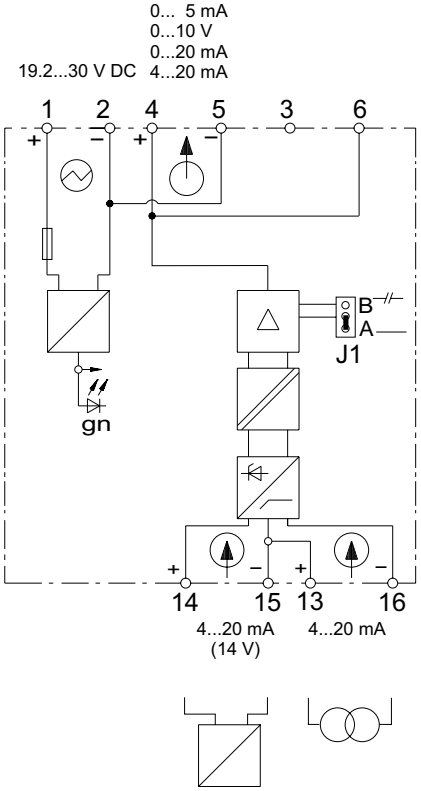

Functions of the plug-in jumpers J.:

J1 Wire break monitoring
A = without
B = with

The positions illustrated on the circuit diagram represent standard adjustments (delivery status)

ABB Automation Products GmbH · Borsigstr. 2 · D-63755 Alzenau · Phone +49(0)60 23 - 92 0 · Fax +49(0)60 23 - 92 33 00 · http://www.abb.com/automation

Subject to technical changes.

Printed in the Fed. Rep. of Germany 12.00

Ordering information		Catalog No.
Isolating Power supply, 1 channel		V17151-21_
Output	4...20 mA	0
	0...20 mA	1
	0...10 V	2
	0...5 mA	3

ABB Automation Products GmbH · Borsigstr. 2 · D-63755 Alzenau · Phone +49(0)60 23 - 92 0 · Fax +49(0)60 23 - 92 33 00 · http://www.abb.com/automation

Subject to technical changes. Printed in the Fed. Rep. of Germany 12.00

Isolating Power Supply

1 channel, HART

V17151-22_

- **Power supply for loop powered HART transmitters**
- **Point to point communication**
- **Wire break monitoring output overrange/underrange (Jumper J1)**

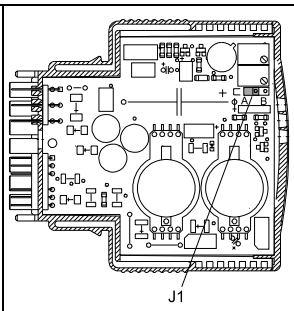

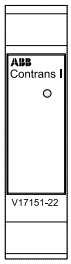

Module size 2

Module fits for:

Socket		Backplane	
V17111-11	●	V17111-2 _ _	❍
V17111-12	●	V17111-3 _ _	●
V17111-13	●	V17111-6 _ _	❍

Output

Transformation ratio	1:1
Residual ripple (peak-to-peak)	< 0.25 %
Output signal short-circuit proof	

Type	Signal	Wire break	Short-circuit	Load
V17151-220	4...20 mA	< 0.1 > 22 mA	23...30 mA	0...600 Ω
V17151-221	0...20 mA	0 > 22 mA	23...30 mA	0...600 Ω
V17151-222	0...10 V	0 > 11 V	–	> 10 kΩ

Communication	
via terminals 3/6	
via mA signal	
Permeable protocol	HART
Bandwidth	500 Hz...10 kHz

Input

Input current	4...20 mA
Supply voltage at 22.7 mA	≥ 14 V
Short circuit current	23...30 mA
Residual ripple (peak-to-peak)	< 100 mV

General data

LED indicators, power “On“ (green)	
Isolation	
Input – output/power supply/FSK	2.3 kV
Max. ambient temperature	-20...+60 °C
Weight	90 g
Power supply	
Rated voltage	19.2...30 V DC
Power consumption	1.05 W
Performance under reference conditions	
Linearity deviation	< 0.1 %
Error limit	< 0.25 %
Temperature effect	< 0.1 %/10 K
Impedance effect	< 0.05 %
Response time	< 50 ms

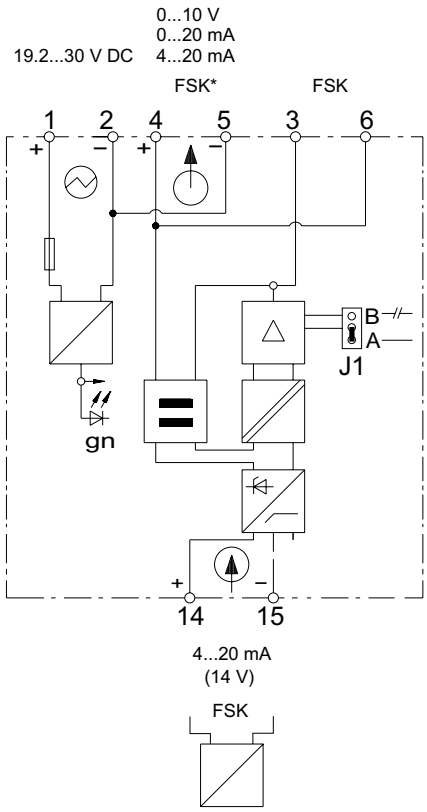

Functions of the plug-in jumpers J.:

J1 Wire break monitoring
A = without
B = with

The positions illustrated on the circuit diagram represent standard adjustments (delivery status)

* FSK only at load ≥ 250 Ω

ABB Automation Products GmbH · Borsigstr. 2 · D-63755 Alzenau · Phone +49(0)60 23 - 92 0 · Fax +49(0)60 23 - 92 33 00 · http://www.abb.com/automation

Subject to technical changes.

Printed in the Fed. Rep. of Germany 12.00

Ordering information		Catalog No.
Isolating Power Supply, 1 channel, HART		V17151-22_
Output	4...20 mA	0
	0...20 mA	1
	0...10 V	2

ABB Automation Products GmbH · Borsigstr. 2 · D-63755 Alzenau · Phone +49(0)60 23 - 92 0 · Fax +49(0)60 23 - 92 33 00 · http://www.abb.com/automation

Subject to technical changes. Printed in the Fed. Rep. of Germany 12.00

Isolating Power Supply

V17151-320

1 channel, HART, FSK bus

- **Power supply for loop powered HART transmitters**
- **FSK bus communication via backplanes and FSK bus amplifier**
- **Galvanic isolation between input/output/power supply and HART**
- **Testjacks for mA signal**
- **Jacks for HART communication**
- **Output signal free of HART signal**

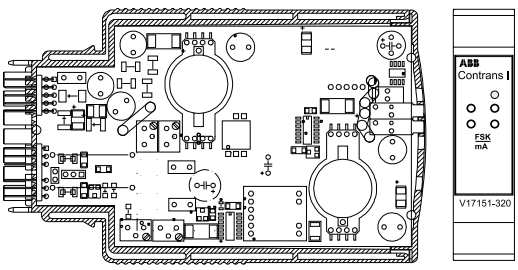

Module size 4

Module fits for:

Socket		Backplane	
V17111-11	❍	V17111-2 _ _	●
V17111-12	❍	V17111-3 _ _	●
V17111-13	❍	V17111-6 _ _	●

Output	
Output current (short-circuit proof)	4...20 mA
Transformation ratio	1:1
Detect. of wire break (input)	< 0.1 mA
Detect. of short-circuit (input, approx.)	23...28 mA
Load	0...600 Ω
Residual ripple (peak-to-peak)	< 0.25 %
Communication	
via FSK bus (backplane/FSK bus amplifier)	
via jacks 2 x 2 mm (front)	
Permeable protocol	HART
Bandwidth	500 Hz...10 kHz
Input	
Input current	4...20 mA
Supply voltage at 20/22 mA	≥ 15.5/14.8 V
Short circuit current	23...28 mA
Residual ripple (peak-to-peak)	< 100 mV
General data	
LED indicators, power “On“ (green)	
Isolation	
Input – output/power supply/FSK	2.3 kV
Output – power supply – FSK	500 V
Max. ambient temperature	-20...+60 °C
Weight	120 g
Power supply	
Rated voltage	19.2...30 V DC
Power consumption	1.7 W
Power dissipation	1.4 W
Performance under reference conditions	
Linearity deviation	< 0.1 %
Error limit	< 0.25 %
Temperature effect	< 0.1 %/10 K
Impedance effect	< 0.05 %
Response time	< 50 ms

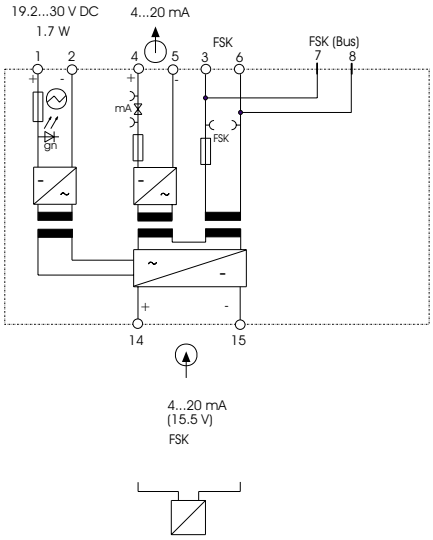

ABB Automation Products GmbH · Borsigstr. 2 · D-63755 Alzenau · Phone +49(0)60 23 - 92 0 · Fax +49(0)60 23 - 92 33 00 · http://www.abb.com/automation

Subject to technical changes.

Printed in the Fed. Rep. of Germany 12.00

Isolating Power Supply

1 channel, HART

V17151-325

- **Power supply for loop powered HART transmitters**
- **Galvanic isolation between input/output/power supply and HART**
- **Testjacks for mA signal**
- **Jacks for HART communication**

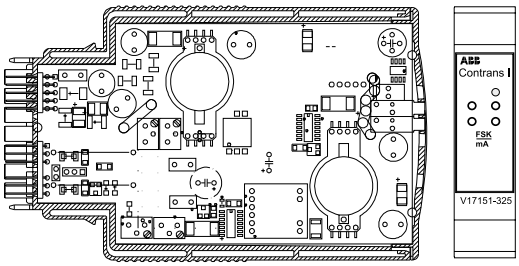

Module size 4

Module fits for:

Socket		Backplane	
V17111-11	●	V17111-2 _ _	●
V17111-12	❍	V17111-3 _ _	●
V17111-13	❍	V17111-6 _ _	●

Output	
Output current (short-circuit proof)	4...20 mA
Transformation ratio	1:1
Detect. of wire break (input)	< 0.1 mA
Detect. of short-circuit (input, approx.)	23...28 mA
Load	0...600 Ω
Residual ripple (peak-to-peak)	< 0.25 %
Communication	
via mA signal	
via jacks 2 x 2 mm (front)	
Permeable protocol	HART
Bandwidth	500 Hz...10 kHz
Input	
Input current	4...20 mA
Supply voltage at 20/22 mA	≥ 15.5/14.8 V
Short circuit current	23...28 mA
Residual ripple (peak-to-peak)	< 100 mV
General data	
LED indicators, power “On“ (green)	
Isolation	
Input – output/power supply/FSK	2.3 kV
Output – power supply – FSK	500 V
Max. ambient temperature	-20...+60 °C
Weight	120 g
Power supply	
Rated voltage	19.2...30 V DC
Power consumption	1.7 W
Power dissipation	1.4 W
Performance under reference conditions	
Linearity deviation	< 0.1 %
Error limit	< 0.25 %
Temperature effect	< 0.1 %/10 K
Impedance effect	< 0.05 %
Response time	< 50 ms

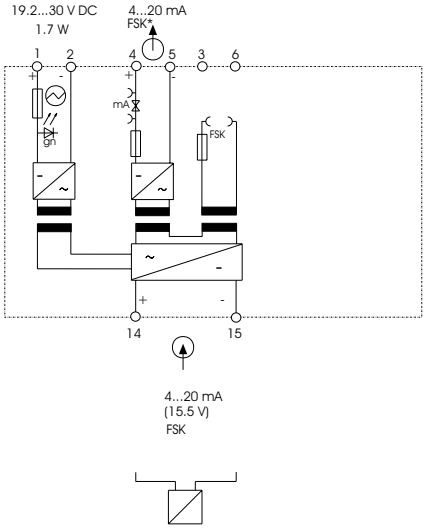

* FSK only at load ≥ 250 Ω

ABB Automation Products GmbH · Borsigstr. 2 · D-63755 Alzenau · Phone +49(0)60 23 - 92 0 · Fax +49(0)60 23 - 92 33 00 · http://www.abb.com/automation

Subject to technical changes.

Printed in the Fed. Rep. of Germany 12.00

Isolating Power Supply

2 channels, HART, FSK bus

V17151-340

- **Power supply for loop powered HART transmitters**
- **FSK bus communication via backplanes and FSK bus amplifier**
- **Galvanic isolation between input/output/power supply and HART**
- **Jacks for HART communication**
- **Output signal free of HART signal**

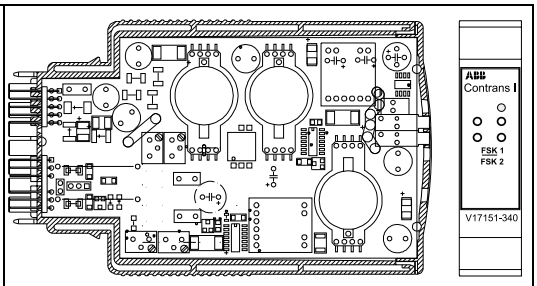

Module size 4

Output per channel	
Output current (short-circuit proof)	4...20 mA
Transformation ratio	1:1
Detect. of wire break (input)	< 0.1 mA
Detect. of short-circuit (input, approx.)	23...28 mA
Load	0...600 Ω
Residual ripple (peak-to-peak)	< 0.25 %
Communication per channel	
via FSK bus (backplane/FSK bus amplifier)	
via jacks 2 x 2 mm (front)	
Permeable protocol	HART
Bandwidth	500 Hz...10 kHz
Input per channel	
Input current	4...20 mA
Supply voltage at 20/22 mA	≥ 15.5/14.8 V
Short circuit current	23...28 mA
Residual ripple (peak-to-peak)	< 100 mV
General data	
LED indicators, power “On“ (green)	
Isolation per channel	
Input – output/power supply/FSK	2.3 kV
Output – power supply – FSK	500 V
Isolation channel 1 – channel 2	
Input 1 – input 2	500 V
Output 1 – output 2	500 V
Max. ambient temperature	-20...+60 °C
Weight	140 g
Power supply	
Rated voltage	19.2...30 V DC
Power consumption	3.1 W
Power dissipation	2.45 W
Performance under reference conditions	
Linearity deviation	< 0.1 %
Error limit	< 0.25 %
Temperature effect	< 0.1 %/10 K
Impedance effect	< 0.05 %
Response time	< 50 ms

Module fits for:

Socket		Backplane	
V17111-11	❍	V17111-2 _ _	●
V17111-12	❍	V17111-3 _ _	●
V17111-13	❍	V17111-6 _ _	●

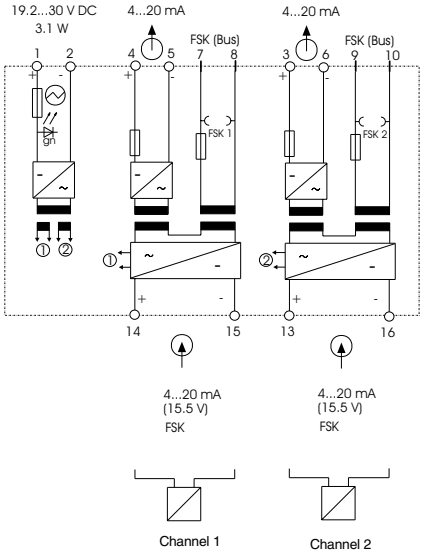

ABB Automation Products GmbH · Borsigstr. 2 · D-63755 Alzenau · Phone +49(0)60 23 - 92 0 · Fax +49(0)60 23 - 92 33 00 · http://www.abb.com/automation

Subject to technical changes.

Printed in the Fed. Rep. of Germany 12.00

Isolating Power Supply

V17151-350

2 outputs, HART, FSK bus

- **Power supply for loop powered HART transmitters**
- **FSK bus communication via backplanes and FSK bus amplifier**
- **Galvanic isolation between input/output/power supply and HART**
- **Jacks for HART communication**
- **Output signal free of HART signal**

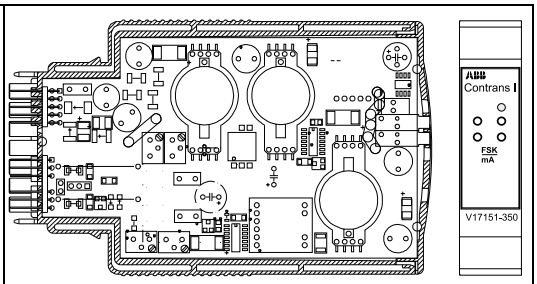

Module size 4

Output output 1/output 2	
Output current (short-circuit proof)	4...20 mA
Transformation ratio	1:1
Detect. of wire break (input)	< 0.1 mA
Detect. of short-circuit (input, approx.)	23...28 mA
Load	0...600 Ω
Residual ripple (peak-to-peak)	< 0.25 %
Communication	
via FSK bus (backplane/FSK bus amplifier)	
via jacks 2 x 2 mm (front)	
Permeable protocol	HART
Bandwidth	500 Hz...10 kHz
Input	
Input current	4...20 mA
Supply voltage at 20/22 mA	≥ 15.5/14.8 V
Short circuit current	23...28 mA
Residual ripple (peak-to-peak)	< 100 mV
General data	
LED indicators, power “On“ (green)	
Isolation	
Input – outp.1/outp. 2/power supply/FSK	2.3 kV
Output 1 – output 2 – power supply – FSK	500 V
Max. ambient temperature	-20...+60 °C
Weight	140 g
Power supply	
Rated voltage	19.2...30 V DC
Power consumption	2.6 W
Power dissipation	2.3 W
Performance under reference conditions	
Linearity deviation	< 0.1 %
Error limit	< 0.25 %
Temperature effect	< 0.1 %/10 K
Impedance effect	< 0.05 %
Response time	< 50 ms

Module fits for:

Socket		Backplane	
V17111-11	❍	V17111-2 _ _	●
V17111-12	❍	V17111-3 _ _	●
V17111-13	❍	V17111-6 _ _	●

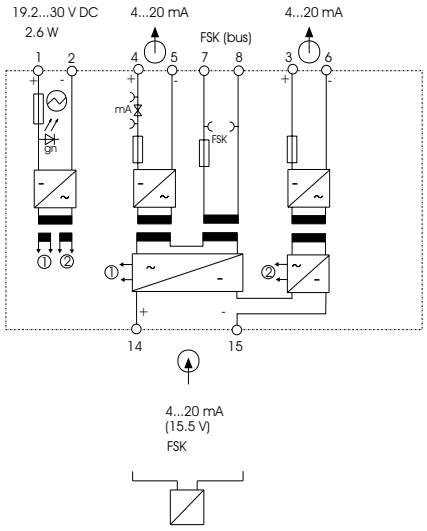

ABB Automation Products GmbH · Borsigstr. 2 · D-63755 Alzenau · Phone +49(0)60 23 - 92 0 · Fax +49(0)60 23 - 92 33 00 · http://www.abb.com/automation

Subject to technical changes.

Printed in the Fed. Rep. of Germany 12.00

Loop Powered Input Isolator

V17151-413

2 channels

- **Electrical isolation for standard signals 0(4)...20 mA (I/P converter, positioner)**
- **Low voltage drop**

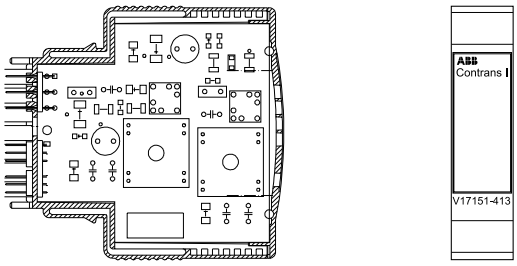

Module size 2

Output per channel	
Output current (short-circuit proof)	(0)4...20 mA
Transformation ratio	1:1
Detect. of overranging (input, approx.)	> 23.6 mA, max. 40 mA
Load	0...750 Ω
Input per channel	
Input current	(0)4...20 mA
Overranging	> 23.6 mA, max. 40 mA
General data	
Voltage drop	< 1.5 V
Isolation	
Input – output	1.35 kV
Channel 1 – channel 2	500 V
Max. ambient temperature	-20...+60 °C
Weight	90 g
Performance under reference conditions	
Linearity deviation	< 0.1 %
Error limit	< 0.1 %
Temperature effect	< 0.1 %/10 K
Impedance effect	< 0.18 %
Response time	< 50 ms

Module fits for:

Socket		Backplane	
V17111-11	●	V17111-2 _ _	●
V17111-12	❍	V17111-3 _ _	●
V17111-13	❍	V17111-6 _ _	●

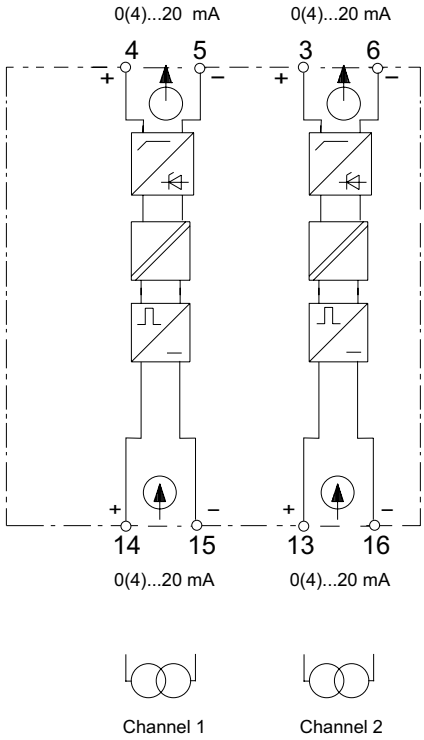

ABB Automation Products GmbH · Borsigstr. 2 · D-63755 Alzenau · Phone +49(0)60 23 - 92 0 · Fax +49(0)60 23 - 92 33 00 · http://www.abb.com/automation

Subject to technical changes.

Printed in the Fed. Rep. of Germany 12.00

Input Isolator

1 channel, HART, FSK bus

V17151-420

- **Input isolator for extra powered HART transmitters (Flowmeters)**
- **FSK bus communication via backplanes and FSK bus amplifier**
- **Galvanic isolation between input/output/power supply and HART**
- **Testjacks for mA signal**
- **Jacks for HART communication**
- **Output signal free of HART signal**

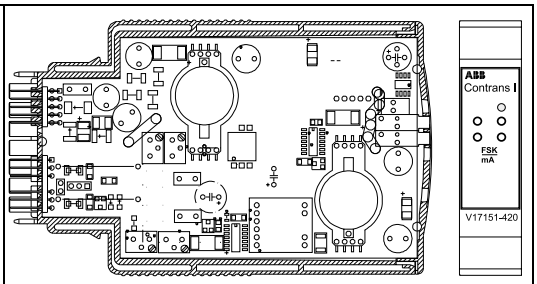

Module size 4

Module fits for:

Socket		Backplane	
V17111-11	❍	V17111-2 _ _	●
V17111-12	❍	V17111-3 _ _	●
V17111-13	❍	V17111-6 _ _	●

Output	
Output current (short-circuit proof)	4...20 mA
Transformation ratio	1:1
Detect. of wire break (input)	< 0.1 mA
Detect. of overranging (input, approx.)	23...28 mA
Load	0...600 Ω
Residual ripple (peak-to-peak)	< 0.25 %
Communication	
via FSK bus (backplane/FSK bus amplifier)	
via jacks 2 x 2 mm (front)	
Permeable protocol	HART
Bandwidth	500 Hz...10 kHz
Input	
Input current	4...20 mA
Voltage drop in input	< 3 V
General data	
LED indicators, power “On“ (green)	
Isolation	
Input – output/power supply/FSK	2.3 kV
Output – power supply – FSK	500 V
Max. ambient temperature	-20...+60 °C
Weight	120 g
Power supply	
Rated voltage	19.2...30 V DC
Power consumption	1.1 W
Power dissipation	1.1 W
Performance under reference conditions	
Linearity deviation	< 0.1 %
Error limit	< 0.25 %
Temperature effect	< 0.1 %/10 K
Impedance effect	< 0.05 %
Response time	< 50 ms

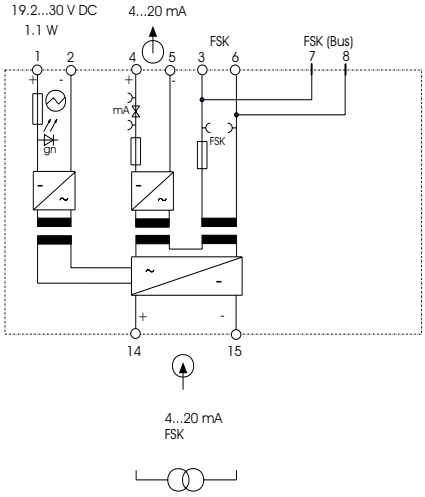

ABB Automation Products GmbH · Borsigstr. 2 · D-63755 Alzenau · Phone +49(0)60 23 - 92 0 · Fax +49(0)60 23 - 92 33 00 · http://www.abb.com/automation

Subject to technical changes.

Printed in the Fed. Rep. of Germany 12.00

Input Isolator, parameterizable

V17151-43_

1 channel V, mA

- **Input isolator for direct current or direct voltage signals**
- **free adjustable measuring ranges**
- **Definition of parameters via LCI interface (does not require an additional power supply)**
- **Relay output for alarm**

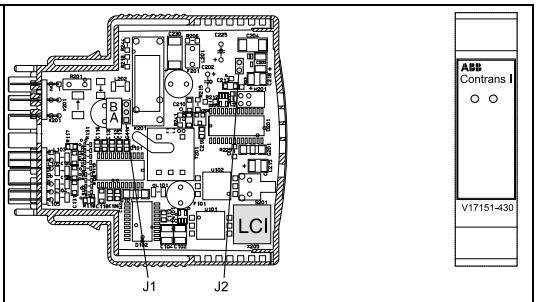

Module size2

Module fits for:

Socket		Backplane	
V17111-11	●	V17111-2 _ _	●
V17111-12	●	V17111-3 _ _	●
V17111-13	●	V17111-6 _ _	●

Output (open and short-circuit proof)

Type	Full modulation span	Load
V17151-430	0/4...20 mA (0/3.8...20,5 mA)	0...600 Ω
V17151-432	0/2...10 V (0/1.9...10.25 V)	> 100 kΩ
V17151-433	0...5 mA (0...5.13 mA)	0...2.4 kΩ
V17151-434	0/1...5 V (0/0.95...5.13 V)	> 50 kΩ
Residual ripple	< 0.25 % (peak-to-peak)	
Damping	0...30 s	
Binary output		
Triggering (adjustable via software)	alarm set point, wire break	
Relay contact (via jumper J1)	1 x NO/NC	
Contact ratings	250VAC; 1A; cosφ >0.7; 560VA	
	30V DC; 2 A; 60 W	
Parameterization	via software	
	or customer-specific	

Input (open and short-circuit proof)

Sensors	V, mA	
Measuring ranges	full modulat. span/load	min. meas. span
	-25...+25 mA/5 Ω	0.5 mA
	-12.5...+12.5 V/> 100 kΩ	300 mV
Customer specific (max. tie points)	60	

General data

LED indicator	power “On“ (green)
	switching state relay (red)
Isolation	
Input – output/power supply	2.3 kV
Max. ambient temperature	-20...+60 °C
Weight	90 g
Power supply	
Connection	terminals 1(+); 2(-)
Rated voltage	19.2...30 V DC
Power consumption	approx. 1.0 W
Performance under reference conditions	
Linearity deviation	< 0.1 %
Error limit	< 0.1 %
Temperature effect	< 0.1 %/10 K
Impedance effect	< 0,05 %
Response time	< 250 ms

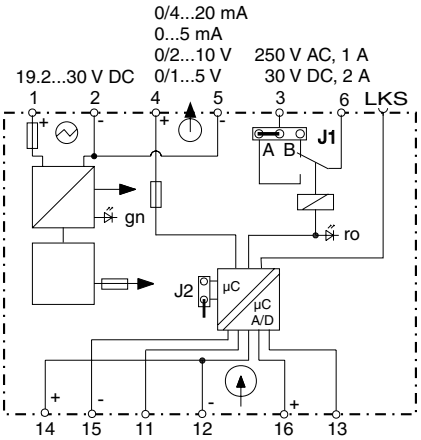

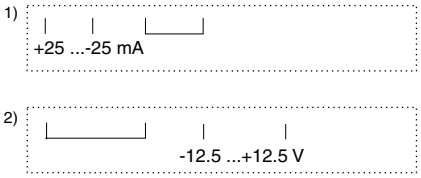

Functions of the plug-in jumpers J.:

J1 Relay output
A = NC
B = NO

J2 Parameterization
disable
enable

The positions illustrated on the circuit diagram represent standard adjustments (delivery status)

ABB Automation Products GmbH · Borsigstr. 2 · D-63755 Alzenau · Phone +49(0)60 23 - 92 0 · Fax +49(0)60 23 - 92 33 00 · http://www.abb.com/automation

Subject to technical changes.

Printed in the Fed. Rep. of Germany 12.00

Ordering information		Catalog No.
Input Isolator, 1 channel, V, mA		V17151-43_
Output	0/4...20 mA	0
	0/2...10 V	2
	0...5 mA	3
	0/1...5 V	4
Accessories		
Programming software (without customer-specified characteristic)*		7957781
LCI adapter		0317135

* with customer-specified characteristic use SMART VISION

ABB Automation Products GmbH · Borsigstr. 2 · D-63755 Alzenau · Phone +49(0)60 23 - 92 0 · Fax +49(0)60 23 - 92 33 00 · http://www.abb.com/automation

Subject to technical changes. Printed in the Fed. Rep. of Germany 12.00

Input Isolator, universal

on preparation

V17151-480

- **Input isolator for direct current or direct voltage signals**
- **Setting of the input and output ranges with DIP switches**
- **Supply voltages from 20...253 V AC/DC**

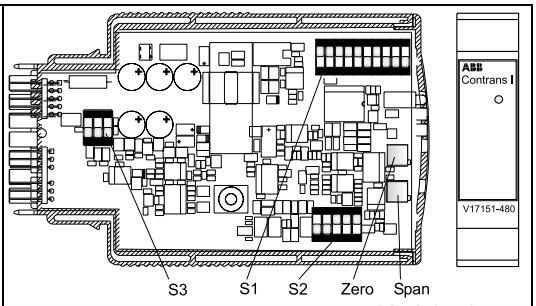

Module size 4

Module fits for:

Socket		Backplane	
V17111-11	●	V17111-2 _ _	●
V17111-12	❍	V17111-3 _ _	●
V17111-13	❍	V17111-6 _ _	●

Output

Current	20 mA uni-/biploar; 4...20 mA
Voltage	5 V, 10 V uni-/bipolar;
	1...5 V, 2...10 V
Offset off output span of select	-100%, -50%, 0%, 50%, 100%
Load at 20 mA	≤ 600 Ω
Load at 10 V	≥ 1 kΩ
Offset error	< 20 µA/< 10 mV
Residual ripple (effective)	< 10 mV

Input

Measurement	0.1...100 mA; 20 mV...200 V			
Measur. range	≤ 5 mA	> 5 mA	≤ 500 mV	> 500 mV
Input resistance approx.	100 Ω	5 Ω	1 MΩ	1 MΩ
Overload	≤100 mA	≤ 300 mA	≤ 20 mA	≤ 3 mA
Adjustment range ZERO pot	± 25 % of the output range			
Adjustment range SPAN pot: 0.3...3.33 from the final value of the input range				
Bandwidth	< 10 kHz, < 10 Hz, adjustable			

General data

LED indicator, power "On" (green)	
Isolation	
Input – output	2.3 kV
Output – power supply	2.3 kV
Max. ambient temperature	-20...+60 °C
Weight	120 g
Power supply	
Rated voltage	20...253 V AC/DC
Power consumption	2 VA AC, 48...62 Hz, 0.9 W DC
Characteristics under reference conditions	
Error limit	< 0.1 % from final value
Temperature effect	< 60 ppm/K from final value

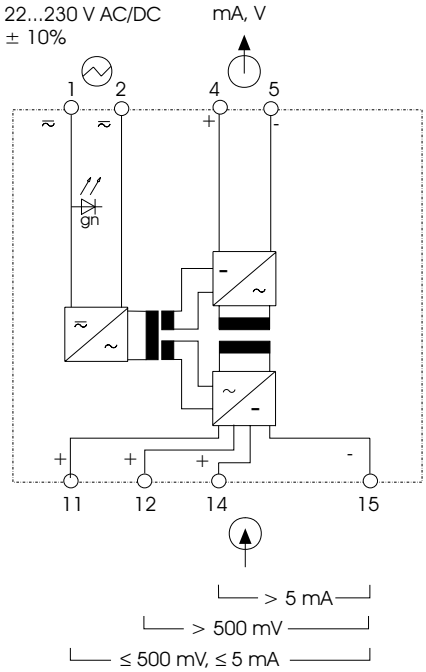

Settings DIP counter:

Input ranges

Input settings ❍ = default ● = on X = not used

	Switch	S1					S2				
	Range	1	2	3	4	5-10	1	2	3	4	5-10
	0...±60 mV					X				●	X
	0...±100 mV	●				X				●	X
	0...±150 mV		●			X				●	X
	0...±300 mV	●	●			X				●	X
	0...±500 mV			●		X				●	X
	0...±1 V	●		●		X		●		●	X
	0...±5 V		●	●		X		●		●	X
	0...±10 V	●	●	●		X		●		●	X
	0...±100 V				●	X			●	●	X
	0...±0.3 mA	●			●	X	●			●	X
	0...±1 mA		●		●	X	●			●	X
	0...±5 mA	●	●		●	X	●			●	X
	0...±10 mA			●	●	X	●			●	X
	0...±20 mA	●		●	●	X	●			●	X
	0...±50 mA		●	●	●	X	●			●	X
❍	0...20 mA	●	●	●	●	X	●			●	X
	Variable with SPAN Pot: 30...333% of sel. range	X	X	X	X	X	X	X	X		X

Output ranges, displacement and limit frequency/damping

Output settings ❍ = default ● = on X = not used

	Switch	S1					S3		
	Range	1-4	2	3	4	8-10	1	2	3
	0...±10 V	X				X	●	●	X
	2...10 V	X	●			X	●	●	X
	0...±5 V	X		●		X	●	●	X
	1...5 V	X	●	●		X	●	●	X
	0...±20 mA	X			●	X			X
❍	4...20 mA	X	●		●	X			X

	Switch	S1				S2		
	Offset	1-7	8	9	10	1-3	4	5
❍	0 %	X				X	X	●
	-100 %	X	●			X	X	●
	-50 %	X		●		X	X	●
	+50 %	X	●	●		X	X	●
	+100 %	X			●	X	X	●
	Variable with ZERO Pot: 0...±25% of span	X	X	X	X	X	X	

	Switch	S3	
	Bandwidth	1-2	3
❍	10 kHz	X	
	10 Hz	X	●

ABB Automation Products GmbH · Borsigstr. 2 · D-63755 Alzenau · Phone +49(0)60 23 - 92 0 · Fax +49(0)60 23 - 92 33 00 · http://www.abb.com/automation

Subject to technical changes.

Printed in the Fed. Rep. of Germany 12.00

Loop Powered Supply Ex

1 channel

V17151-51

■ **Electrical isolation for current signals with transmitter power supply**

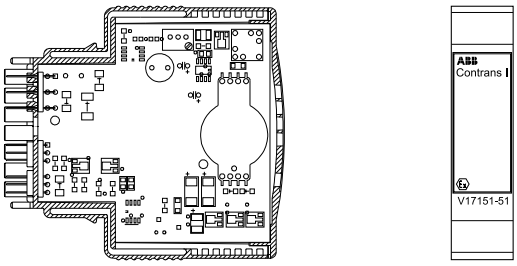

Module size 2

Module fits for:			
Socket		Backplane	
V17111-11	●	V17111-2 _ _	●
V17111-12	❍	V17111-3 _ _	●
V17111-13	❍	V17111-6 _ _	●

Output	(safe area)
Output current (short-circuit proof)	4...20 mA
Transformation ratio	1:1
Detect. of wire break (input)	< 400 µA
Supply voltage	18.5...30 V

Input	(hazardous area)
Input current (short-circuit proof)	4...20 mA
Supply voltage	> 13.5 V
Short-circuit current	23...30 mA
Explosion protection	[EEx ib] IIC
Certificate of conformity	PTB No. 00 ATEX 2017
Max. short-circuit current	I_o = 28.5 mA
Max. voltage	U_o = 20 V
Max. power	P_o = 570 mW
Permitted external inductance	L_a = 1.3 mH
Permitted external capacitance	C_a = 95 nF

General data	
Isolation	
Input – output	2.3 kV
Max. ambient temperature	-20...+60 °C
Weight	90 g
Performance under reference conditions	
Linearity deviation	< 0.1 %
Error limit	< 0.25 %
Temperature effect	< 0.1 %/10 K
Impedance effect	< 0.05 %
Response time	< 50 ms

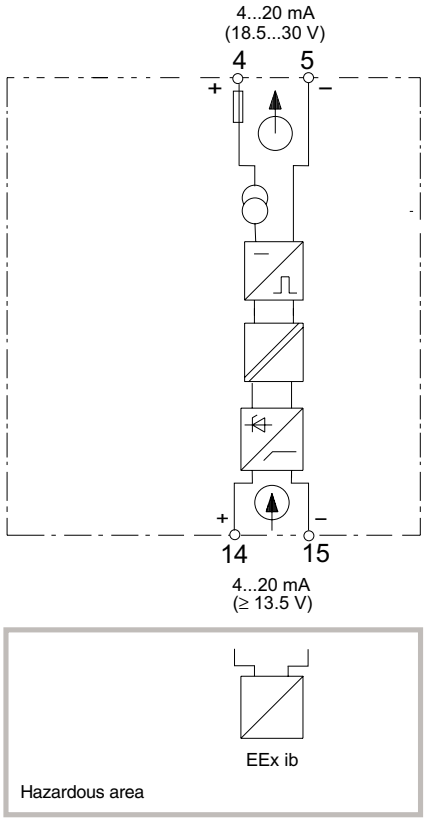

ABB Automation Products GmbH · Borsigstr. 2 · D-63755 Alzenau · Phone +49(0)60 23 - 92 0 · Fax +49(0)60 23 - 92 33 00 · http://www.abb.com/automation

Subject to technical changes.

Printed in the Fed. Rep. of Germany 12.00

Loop Powered Supply Ex

1 channel, HART

V17151-52

- **Electrical isolation for current signals with transmitter power supply and HART communication**
- **Point to point communication**

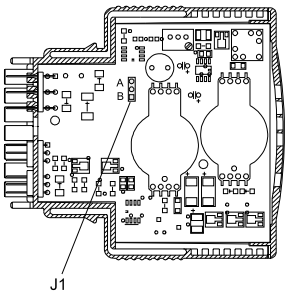

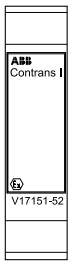

Module size 2

Module fits for:

Socket		Backplane	
V17111-11	●	V17111-2 _ _	●
V17111-12	❍	V17111-3 _ _	●
V17111-13	❍	V17111-6 _ _	●

Output	(safe area)
Output current (short-circuit proof)	4...20 mA
Transformation ratio	1:1
Detect. of wire break (input)	< 400 µA
Supply voltage	18.5...30 V
Communication	
via terminals 3/6	(Jumper J1 = A)
via mA signal	(Jumper J1 = B)
Permeable protocol	HART
Bandwidth	500 Hz...10 kHz
Input	(hazardous area)
Input current (short-circuit proof)	4...20 mA
Supply voltage	> 13.2 V
Short-circuit current	23...30 mA
Explosion protection	[EEx ib] IIC
Certificate of conformity	PTB No. 00 ATEX 2017
Max. short-circuit current	I_o < 28.5 mA
Max. voltage	U_o < 20 V
Max. power	P_o < 570 mW
Permitted external inductance	L_a < 1.3 mH
Permitted external capacitance	C_a < 95 nF

General data	
Isolation	
Input – output/FSK	2.3 kV
Max. ambient temperature	-20...+60 °C
Weight	90 g
Performance under reference conditions	
Linearity deviation	< 0.1 %
Error limit	< 0.25 %
Temperature effect	< 0.1 %/10 K
Impedance effect	< 0.05 %
Response time	< 50 ms

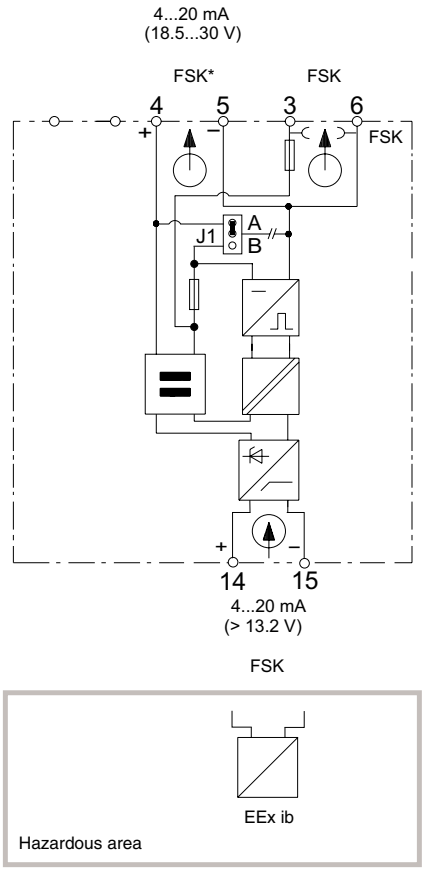

Functions of the plug-in jumpers J.:

J1 HART communication
A = via terminals 3/6 (delivery status)
B = via terminals 4/5

The positions illustrated on the circuit diagram represent standard adjustments (delivery status)

* FSK only at load ≥ 250 Ω

ABB Automation Products GmbH · Borsigstr. 2 · D-63755 Alzenau · Phone +49(0)60 23 - 92 0 · Fax +49(0)60 23 - 92 33 00 · http://www.abb.com/automation

Subject to technical changes.

Printed in the Fed. Rep. of Germany 12.00

ABB Automation Products GmbH · Borsigstr. 2 · D-63755 Alzenau · Phone +49(0)60 23 - 92 0 · Fax +49(0)60 23 - 92 33 00 · http://www.abb.com/automation

Subject to technical changes.

Printed in the Fed. Rep. of Germany 12.00

Isolating Power Supply Ex

1 channel

V17151-61_

- **Power supply for loop powered transmitters**
- **Isolating driver for 4...20 mA**
- **Wire break monitoring output overrange/underrange (Jumper J1)**

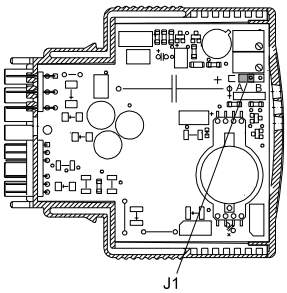

Module size 2

Module fits for:

Socket		Backplane	
V17111-11	●	V17111-2 _ _	●
V17111-12	●	V17111-3 _ _	●
V17111-13	●	V17111-6 _ _	●

Output

(safe area)

Transformation ratio			1:1	
Residual ripple (peak-to-peak)			< 0.25 %	
Output signal short-circuit proof				
Type	Signal	Wire break	Short-circuit	Load
V17151-610	4...20 mA	< 0.1 > 22 mA	23...30 mA	0...600 Ω
V17151-611	0...20 mA	0 > 22 mA	23...30 mA	0...600 Ω
V17151-612	0...10 V	0 > 11 V	–	> 10 kΩ
V17151-613	0... 5 mA	0 > 5.13 mA	–	0...2.4 kΩ

Input

(hazardous area)

Input current	4...20 mA
Short circuit current	23...28 mA
Residual ripple (peak-to-peak)	< 100 mV
Isolating power supply (terminal 14/15)	
Supply voltage at 22.7 mA	≥ 14 V
Explosion protection	[EEx ib] IIC
Certificate of conformity	PTB No. Ex-95.D.2188 X
Max. short-circuit current	I_o = 28.5 mA
Max. voltage	U_o = 20 V
Max. power	P_o = 570 mW
Permitted external inductance	L_a = 1.3 mH
Permitted external capacitance	C_a = 95 nF
Isolating driver (terminal 13/16)	
Voltage drop	< 1 V
Explosion protection	[EEx ib] IIC
Max. short-circuit current	I_o = 28.5 mA
Max. voltage	U_o = 2.9 V
Max. power	P_o = 82.6 mW

General data

LED indicators, power “On“ (green)	
Isolation	
Input – output/power supply	2.3 kV
Max. ambient temperature	-20...+60 °C
Weight	90 g
Power supply	
Rated voltage	19.2...30 V DC
Power consumption	1.05 W
Performance under reference conditions	
Linearity deviation	< 0.1 %
Error limit	< 0.25 %
Temperature effect	< 0.1 %/10 K
Impedance effect	< 0.05 %
Response time	< 50 ms

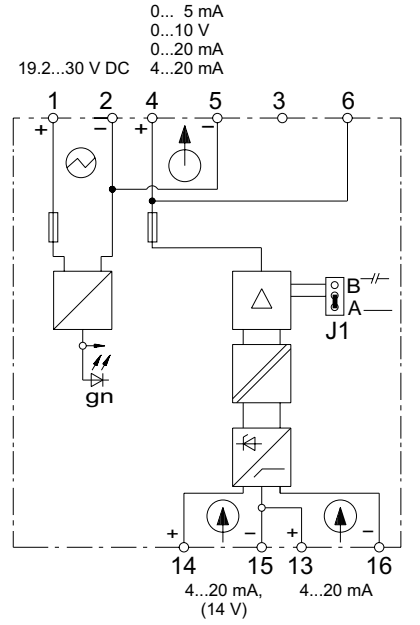

Functions of the plug-in jumpers J.:

J1 wire break monitoring
A = without
B = with

The positions illustrated on the circuit diagram represent standard adjustments (delivery status)

ABB Automation Products GmbH · Borsigstr. 2 · D-63755 Alzenau · Phone +49(0)60 23 - 92 0 · Fax +49(0)60 23 - 92 33 00 · http://www.abb.com/automation

Subject to technical changes.

Printed in the Fed. Rep. of Germany 12.00

Ordering information		Catalog No.
Isolating Power Supply Ex, 1 channel		V17151-61_
Output	4...20 mA	0
	0...20 mA	1
	0...10 V	2
	0...5 mA	3

ABB Automation Products GmbH · Borsigstr. 2 · D-63755 Alzenau · Phone +49(0)60 23 - 92 0 · Fax +49(0)60 23 - 92 33 00 · http://www.abb.com/automation

Subject to technical changes.

Printed in the Fed. Rep. of Germany 12.00

Isolating Power Supply Ex

1 channel, HART

V17151-62_

- **Power supply for loop powered HART transmitters**
- **Point to point communication**
- **Wire break monitoring output overrange/underrange (Jumper J1)**

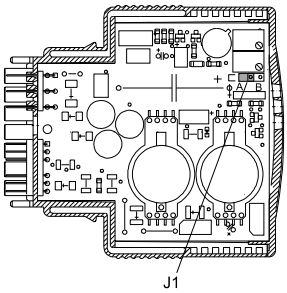

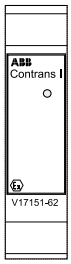

Module size 2

Module fits for:

Socket		Backplane	
V17111-11	●	V17111-2 _ _	●
V17111-12	●	V17111-3 _ _	●
V17111-13	●	V17111-6 _ _	●

Output	(safe area)			
Transformation ratio	1:1			
Residual ripple (peak-to-peak)	< 0.25 %			
Output signal short-circuit proof				
Type	Signal	Wire break	Short-circuit	Load
V17151-620	4...20 mA	< 0.1 > 22 mA	23...30 mA	0...600 Ω
V17151-621	0...20 mA	0 > 22 mA	23...30 mA	0...600 Ω
V17151-622	0...10 V	0 > 11 V	–	> 10 kΩ
Communication				
via terminals 3/6				
via mA signal				
Permeable protocol	HART			
Bandwidth	500 Hz...10 kHz			

Input	(hazardous area)
Input current	4...20 mA
Supply voltage at 22.7 mA	≥ 14 V
Short circuit current	23...28 mA
Residual ripple (peak-to-peak)	< 100 mV
Explosion protection	[EEx ib] IIC
Certificate of conformity	PTB No. Ex-95.D.2188 X
Max. short-circuit current	I_o = 28.5 mA
Max. voltage	U_o = 20 V
Max. power	P_o = 570 mW
Permitted external inductance	L_a = 1.3 mH
Permitted external capacitance	C_a = 95 nF

General data	
LED indicators, power “On“ (green)	
Isolation	
Input – output/power supply/FSK	2.3 kV
Max. ambient temperature	-20...+60 °C
Weight	90 g
Power supply	∿
Rated voltage	19.2...30 V DC
Power consumption	1.05 W
Performance under reference conditions	
Linearity deviation	< 0.1 %
Error limit	< 0.25 %
Temperature effect	< 0.1 %/10 K
Impedance effect	< 0.05 %
Response time	< 50 ms

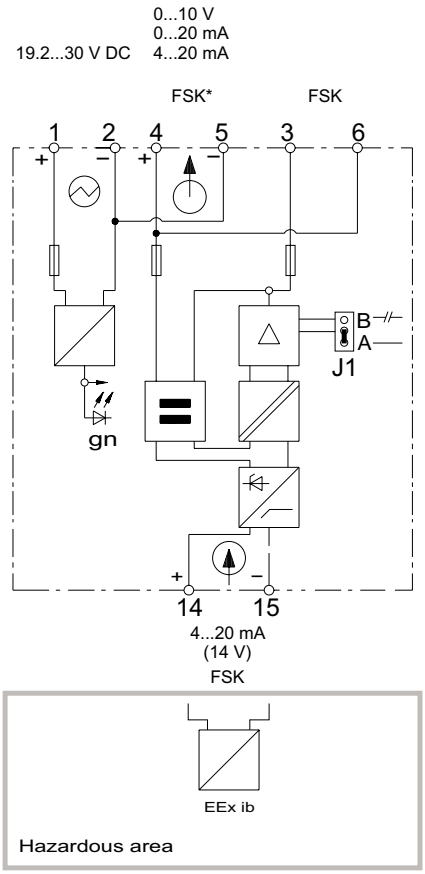

Functions of the plug-in jumpers J.:

J1 wire break monitoring
A = without
B = with

The positions illustrated on the circuit diagram represent standard adjustments (delivery status)

* FSK only at load ≥ 250 Ω (4...20 mA)

ABB Automation Products GmbH · Borsigstr. 2 · D-63755 Alzenau · Phone +49(0)60 23 - 92 0 · Fax +49(0)60 23 - 92 33 00 · http://www.abb.com/automation

Subject to technical changes.

Printed in the Fed. Rep. of Germany 12.00

Ordering information		Catalog No.
Isolating Power Supply Ex, 1 channel, HART		V17151-62_
Output	4...20 mA	0
	0...20 mA	1
	0...10 V	2

ABB Automation Products GmbH · Borsigstr. 2 · D-63755 Alzenau · Phone +49(0)60 23 - 92 0 · Fax +49(0)60 23 - 92 33 00 · http://www.abb.com/automation

Subject to technical changes. Printed in the Fed. Rep. of Germany 12.00

Isolating Power Supply Ex

1 channel, HART, FSK bus

V17151-720

- **Power supply for loop powered HART transmitters**
- **FSK bus communication via backplanes and FSK bus amplifier**
- **Galvanic isolation between input/output/power supply and HART**
- **Testjacks for mA signal**
- **Jacks for HART communication**
- **Output signal free of HART signal**

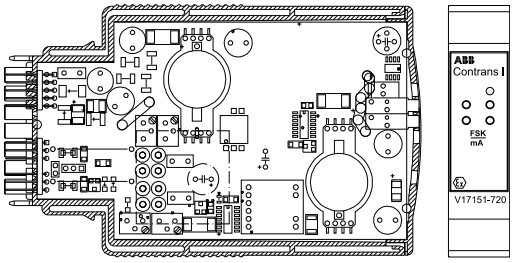

Module size 4

Module fits for:

Socket		Backplane	
V17111-11	❍	V17111-2 _ _	●
V17111-12	❍	V17111-3 _ _	●
V17111-13	❍	V17111-6 _ _	●

Output	(safe area)
Output current (short-circuit proof)	4...20 mA
Transformation ratio	1:1
Detect. of wire break (input)	< 0.1 mA
Detect. of short-circuit (input, approx.)	23...28 mA
Load	0...600 Ω
Residual ripple (peak-to-peak)	< 0.25 %
Communication	
via FSK bus (backplane/FSK bus amplifier)	
via jacks 2 x 2 mm (front)	
Permeable protocol	HART
Bandwidth	500 Hz...10 kHz
Input	(hazardous area)
Input current	4...20 mA
Supply voltage at 20/22 mA	≥ 15.5/14.8 V
Short circuit current	23...28 mA
Residual ripple (peak-to-peak)	< 100 mV
Explosion protection	[EEx ia] IIC
Certificate of conformity	PTB 98 ATEX 2183 X
Max. short-circuit current	I_o = 93 mA
Max. voltage	U_o = 26.3 V
Max. power	P_o = 610 mW
Permitted external inductance	L_a = 4.1 mH
Permitted external capacitance	C_a = 97 nF
General data	
LED indicators, power “On“ (green)	
Isolation	
Input – output/power supply/FSK	2.3 kV
Output – power supply – FSK	500 V
Max. ambient temperature	-20...+60 °C
Weight	120 g
Power supply	∿
Rated voltage	19.2...30 V DC
Power consumption	1.7 W
Power dissipation	1.4 W
Performance under reference conditions	
Linearity deviation	< 0.1 %
Error limit	< 0.25 %
Temperature effect	< 0.1 %/10 K
Impedance effect	< 0.05 %
Response time	< 50 ms

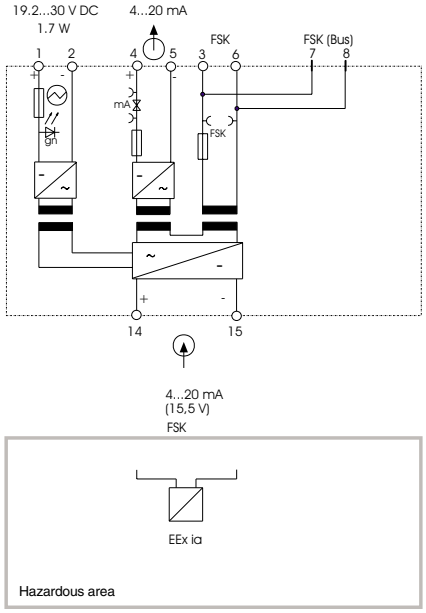

ABB Automation Products GmbH · Borsigstr. 2 · D-63755 Alzenau · Phone +49(0)60 23 - 92 0 · Fax +49(0)60 23 - 92 33 00 · http://www.abb.com/automation

Subject to technical changes.

Printed in the Fed. Rep. of Germany 12.00

Isolating Power Supply Ex

1 channel, HART

V17151-725

- **Power supply for loop powered HART transmitters**
- **Galvanic isolation between input/output/power supply and HART**
- **Testjacks for mA signal**
- **Jacks for HART communication**

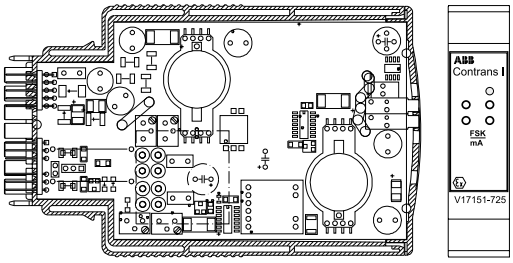

Module size 4

Module fits for:

Socket		Backplane	
V17111-11	●	V17111-2 _ _	●
V17111-12	❍	V17111-3 _ _	●
V17111-13	❍	V17111-6 _ _	●

Output	(safe area)
Output current (short-circuit proof)	4...20 mA
Transformation ratio	1:1
Detect. of wire break (input)	< 0.1 mA
Detect. of short-circuit (input, approx.)	23...28 mA
Load	0...600 Ω
Residual ripple (peak-to-peak)	< 0.25 %
Communication	
via mA signal	
via testjacks 2 x 2 mm (front)	
Permeable protocol	HART
Bandwidth	500 Hz...10 kHz

Input	(hazardous area)
Input current	4...20 mA
Supply voltage at 20/22 mA	≥ 15.5/14.8 V
Short circuit current	23...28 mA
Residual ripple (peak-to-peak)	< 100 mV
Explosion protection	[EEx ia] IIC
Certificate of conformity	PTB 98 ATEX 2183 X
Max. short-circuit current	I_o = 93 mA
Max. voltage	U_o = 26.3 V
Max. power	P_o = 610 mW
Permitted external inductance	L_a = 4.1 mH
Permitted external capacitance	C_a = 97 nF

General data	
LED indicators, power “On“ (green)	
Isolation	
Input – output/power supply/FSK	2.3 kV
Output – power supply – FSK	500 V
Max. ambient temperature	-20...+60 °C
Weight	120 g
Power supply	∿
Rated voltage	19.2...30 V DC
Power consumption	1.7 W
Power dissipation	1.4 W
Performance under reference conditions	
Linearity deviation	< 0.1 %
Error limit	< 0.25 %
Temperature effect	< 0.1 %/10 K
Impedance effect	< 0.05 %
Response time	< 50 ms

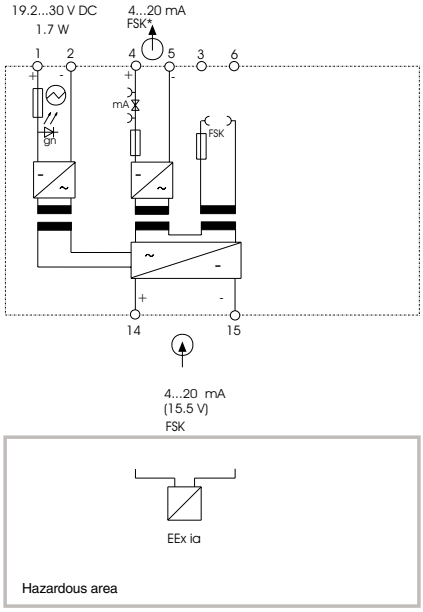

* FSK only at load ≥ 250 Ω

ABB Automation Products GmbH · Borsigstr. 2 · D-63755 Alzenau · Phone +49(0)60 23 - 92 0 · Fax +49(0)60 23 - 92 33 00 · http://www.abb.com/automation

Subject to technical changes.

Printed in the Fed. Rep. of Germany 12.00

Isolating Power Supply Ex

2 channels, HART, FSK bus

V17151-740

- **Power supply for loop powered HART transmitters**
- **FSK bus communication via backplanes and FSK bus amplifier**
- **Galvanic isolation between input/output/power supply and HART**
- **Jacks for HART communication**
- **Output signal free of HART signal**

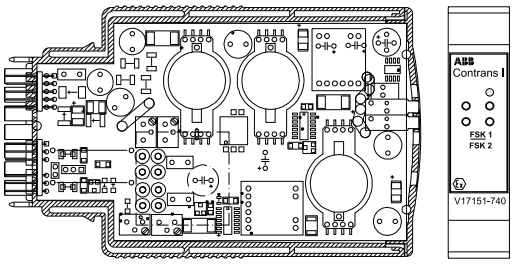

Module size 4

Module fits for:

Socket		Backplane	
V17111-11	❍	V17111-2 _ _	●
V17111-12	❍	V17111-3 _ _	●
V17111-13	❍	V17111-6 _ _	●

Output per channel	(safe area)
Output current (short-circuit proof)	4...20 mA
Transformation ratio	1:1
Detect. of wire break (input)	< 0.1 mA
Detect. of short-circuit (input, approx.)	23...28 mA
Load	0...600 Ω
Residual ripple (peak-to-peak)	< 0.25 %
Communication per channel	
via FSK bus (backplane/FSK bus amplifier)	
via jacks 2 x 2 mm (front)	
Permeable protocol	HART
Bandwidth	500 Hz...10 kHz
Input per channel	(hazardous area)
Input current	4...20 mA
Supply voltage at 20/22 mA	≥ 15.5/14.8 V
Short circuit current	23...28 mA
Residual ripple (peak-to-peak)	< 100 mV
Explosion protection	[EEx ia] IIC
Certificate of conformity	PTB 98 ATEX 2183 X
Max. short-circuit current	I_o = 93 mA
Max. voltage	U_o = 26.3 V
Max. power	P_o = 610 mW
Permitted external inductance	L_a = 4.1 mH
Permitted external capacitance	C_a = 97 nF

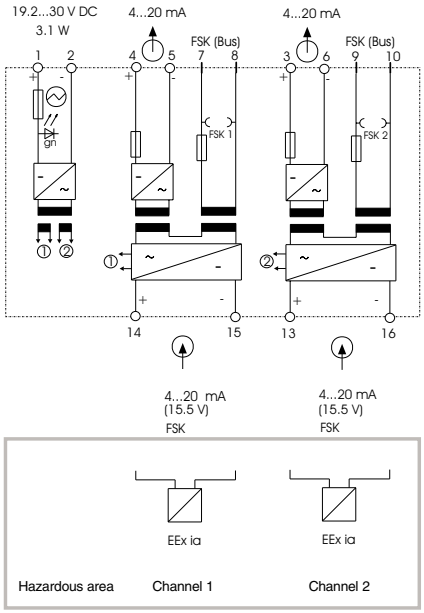

General data

LED indicators, power "On" (green)	
Isolation per channel	
Input – output/power supply/FSK	2.3 kV
Output – power supply – FSK	500 V
Isolation channel 1 – channel 2	
Input 1 – input 2	500 V
Output 1 – output 2	500 V
Max. ambient temperature	-20...+60 °C
Weight	140 g
Power supply	
Rated voltage	19.2...30 V DC
Power consumption	3.1 W
Power dissipation	2.45 W
Performance under reference conditions	
Linearity deviation	< 0.1 %
Error limit	< 0.25 %
Temperature effect	< 0.1 %/10 K
Impedance effect	< 0.05 %
Response time	< 50 ms

ABB Automation Products GmbH · Borsigstr. 2 · D-63755 Alzenau · Phone +49(0)60 23 - 92 0 · Fax +49(0)60 23 - 92 33 00 · http://www.abb.com/automation

Subject to technical changes.

Printed in the Fed. Rep. of Germany 12.00

Isolating Power Supply Ex

2 channels, HART

V17151-745

- **Power supply for loop powered HART transmitters**
- **Galvanic isolation between input/output/power supply and HART**
- **Jacks for HART communication**

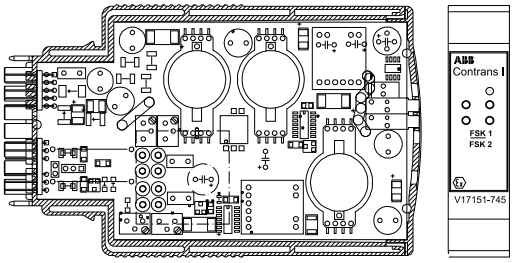

Module size 4

Module fits for:

Socket		Backplane	
V17111-11	●	V17111-2 _ _	●
V17111-12	❍	V17111-3 _ _	●
V17111-13	❍	V17111-6 _ _	●

Output per channel	(safe area)
Output current (short-circuit proof)	4...20 mA
Transformation ratio	1:1
Detect. of wire break (input)	< 0.1 mA
Detect. of short-circuit (input, approx.)	23...28 mA
Load	0...600 Ω
Residual ripple (peak-to-peak)	< 0.25 %
Communication per channel	
via mA signal	
via jacks 2 x 2 mm (front)	
Permeable protocol	HART
Bandwidth	500 Hz...10 kHz
Input per channel	(hazardous area)
Input current	4...20 mA
Supply voltage at 20/22 mA	≥ 15.5/14.8 V
Short circuit current	23...28 mA
Residual ripple (peak-to-peak)	< 100 mV
Explosion protection	[EEx ia] IIC
Certificate of conformity	PTB 98 ATEX 2183 X
Max. short-circuit current	I_o = 93 mA
Max. voltage	U_o = 26.3 V
Max. power	P_o = 610 mW
Permitted external inductance	L_a = 4.1 mH
Permitted external capacitance	C_a = 97 nF

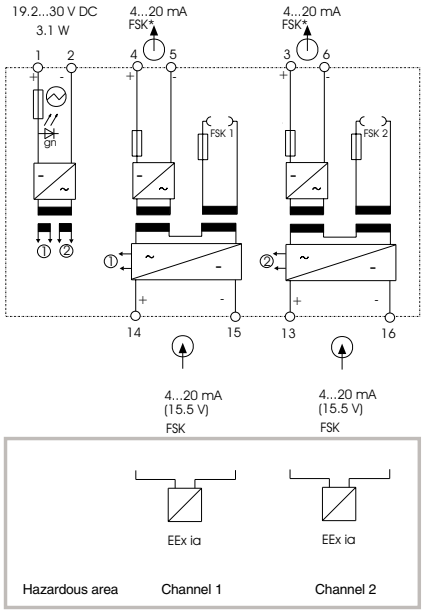

* FSK only at load ≥ 250 Ω

General data

LED indicators, power "On" (green)	
Isolation per channel	
Input – output/power supply/FSK	2.3 kV
Output – power supply – FSK	500 V
Isolation channel 1 – channel 2	
Input 1 – input 2	500 V
Output 1 – output 2	500 V
Max. ambient temperature	-20...+60 °C
Weight	140 g
Power supply	
Rated voltage	19.2...30 V DC
Power consumption	3.1 W
Power dissipation	2.45 W
Performance under reference conditions	
Linearity deviation	< 0.1 %
Error limit	< 0.1 %
Temperature effect	< 0.1 %/10 K
Impedance effect	< 0.05 %
Response time	< 50 ms

ABB Automation Products GmbH · Borsigstr. 2 · D-63755 Alzenau · Phone +49(0)60 23 - 92 0 · Fax +49(0)60 23 - 92 33 00 · http://www.abb.com/automation

Subject to technical changes.

Printed in the Fed. Rep. of Germany 12.00

Isolating Power Supply Ex

2 outputs, HART, FSK bus

V17151-750

- **Power supply for loop powered HART transmitters**
- **FSK bus communication via backplanes and FSK bus amplifier**
- **Galvanic isolation between input/output/power supply and HART**
- **Jacks for HART communication**
- **Output signal free of HART signal**

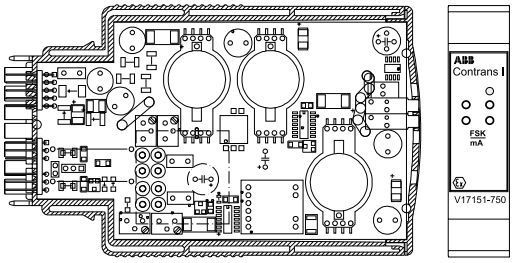

Module size 4

Module fits for:

Socket		Backplane	
V17111-11	❍	V17111-2 _ _	●
V17111-12	❍	V17111-3 _ _	●
V17111-13	❍	V17111-6 _ _	●

Output output 1/output 2	(safe area)
Output current (short-circuit proof)	4...20 mA
Transformation ratio	1:1
Detect. of wire break (input)	< 0.1 mA
Detect. of short-circuit (input, approx.)	23...28 mA
Load	0...600 Ω
Residual ripple (peak-to-peak)	< 0.25 %
Communication	
via FSK bus (backplane/FSK bus amplifier)	
via jacks 2 x 2 mm (front)	
Permeable protocol	HART
Bandwidth	500 Hz...10 kHz

Input	(hazardous area)
Input current	4...20 mA
Supply voltage at 20/22 mA	≥ 15.5/14.8 V
Short circuit current	23...28 mA
Residual ripple (peak-to-peak)	< 100 mV
Explosion protection	[EEx ia] IIC
Certificate of conformity	PTB 98 ATEX 2183 X
Max. short-circuit current	I_o = 93 mA
Max. voltage	U_o = 26.3 V
Max. power	P_o = 610 mW
Permitted external inductance	L_a = 4.1 mH
Permitted external capacitance	C_a = 97 nF

General data	
LED indicators, power “On“ (green)	
Isolation	
Input – outp. 1/outp. 2/power supply/FSK	2.3 kV
Output 1 – output 2 – power supply – FSK	500 V
Max. ambient temperature	-20...+60 °C
Weight	140 g
Power supply	∿
Rated voltage	19.2...30 V DC
Power consumption	2.6 W
Power dissipation	2.3 W
Performance under reference conditions	
Linearity deviation	< 0.1 %
Error limit	< 0.25 %
Temperature effect	< 0.1 %/10 K
Impedance effect	< 0.05 %
Response time	< 50 ms

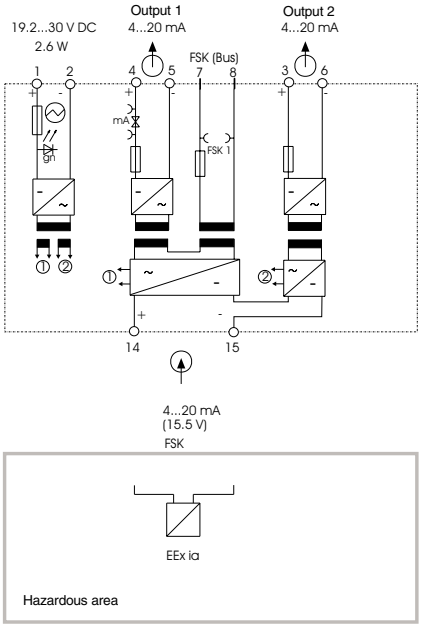

ABB Automation Products GmbH · Borsigstr. 2 · D-63755 Alzenau · Phone +49(0)60 23 - 92 0 · Fax +49(0)60 23 - 92 33 00 · http://www.abb.com/automation

Subject to technical changes.

Printed in the Fed. Rep. of Germany 12.00

Isolating Power Supply Ex

2 outputs, HART

V17151-755

- **Power supply for loop powered HART transmitters**
- **Galvanic isolation between input/output/power supply and HART**
- **Testjacks for mA signal**
- **Jacks for HART communication**

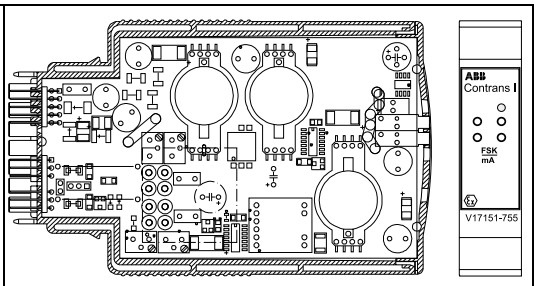

Module size 4

Module fits for:

Socket		Backplane	
V17111-11	●	V17111-2 _ _	●
V17111-12	❍	V17111-3 _ _	●
V17111-13	❍	V17111-6 _ _	●

Output output 1/output 2	(safe area)
Output current (short-circuit proof)	4...20 mA
Transformation ratio	1:1
Detect. of wire break (input)	< 0.1 mA
Detect. of short-circuit (input, approx.)	23...28 mA
Load	0...600 Ω
Residual ripple (peak-to-peak)	< 0.25 %
Communication	
via mA signal	
via jacks 2 x 2 mm (front)	
Permeable protocol	HART
Bandwidth	500 Hz...10 kHz

Input	(hazardous area)
Input current	4...20 mA
Supply voltage at 20/22 mA	≥ 15.5/14.8 V
Short circuit current	23...28 mA
Residual ripple (peak-to-peak)	< 100 mV
Explosion protection	[EEx ia] IIC
Certificate of conformity	PTB 98 ATEX 2183 X
Max. short-circuit current	I_o = 93 mA
Max. voltage	U_o = 26.3 V
Max. power	P_o = 610 mW
Permitted external inductance	L_a = 4.1 mH
Permitted external capacitance	C_a = 97 nF

General data	
LED indicators, power “On“ (green)	
Isolation	
Input – outp. 1/outp. 2/power supply/FSK	2.3 kV
Output 1 – output 2 – power supply – FSK	500 V
Max. ambient temperature	-20...+60 °C
Weight	140 g
Power supply	∿
Rated voltage	19.2...30 V DC
Power consumption	2.6 W
Power dissipation	2.3 W
Performance under reference conditions	
Linearity deviation	< 0.1 %
Error limit	< 0.25 %
Temperature effect	< 0.1 %/10 K
Impedance effect	< 0.05 %
Response time	< 50 ms

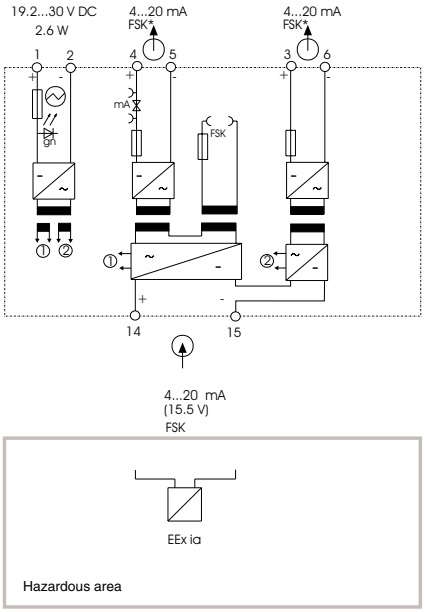

* FSK only at load ≥ 250 Ω

ABB Automation Products GmbH · Borsigstr. 2 · D-63755 Alzenau · Phone +49(0)60 23 - 92 0 · Fax +49(0)60 23 - 92 33 00 · http://www.abb.com/automation

Subject to technical changes.

Printed in the Fed. Rep. of Germany 12.00

Input Isolator Ex

1 channel, HART, FSK bus

V17151-820

- **Input isolator for extra powered HART transmitters (Flowmeters)**
- **FSK bus communication via backplanes and FSK bus amplifier**
- **Galvanic isolation between input/output/power supply and HART**
- **Testjacks for mA signal**
- **Jacks for HART communication**
- **Output signal free of HART signal**

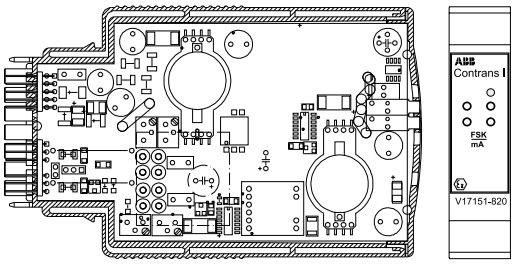

Module size 4

Module fits for:

Socket		Backplane	
V17111-11	❍	V17111-2 _ _	●
V17111-12	❍	V17111-3 _ _	●
V17111-13	❍	V17111-6 _ _	●

Output	(safe area)
Output current (short-circuit proof)	4...20 mA
Transformation ratio	1:1
Detect. of wire break (input)	< 0.1 mA
Detect. of short circuit (input, approx.)	23...28 mA
Load	0...600 Ω
Residual ripple (peak-to-peak)	< 0.25 %
Communication	
via FSK bus (backplane/FSK bus amplifier)	
via jacks 2 x 2 mm (front)	
Permeable protocol	HART
Bandwidth	500 Hz...10 kHz

Input	(hazardous area)
Input current	4...20 mA
Voltage drop in input	< 3 V
Explosion protection	[EEx ia] IIC
Certificate of conformity	PTB 98 ATEX 2183 X
Max. short-circuit current	I_o = 30.5 mA
Max. voltage	U_o = 2.9 V
Max. power	P_o = 22.1 mW

General data	
LED indicators, power “On“ (green)	
Isolation	
Input – output/power supply/FSK	2.3 kV
Output – power supply – FSK	500 V
Max. ambient temperature	-20...+60 °C
Weight	120 g
Power supply	
Rated voltage	19.2...30 V DC
Power consumption	1.1 W
Power dissipation	1.1 W
Performance under reference conditions	
Linearity deviation	< 0.1 %
Error limit	< 0.25 %
Temperature effect	< 0.1 %/10 K
Impedance effect	< 0.05 %
Response time	< 50 ms

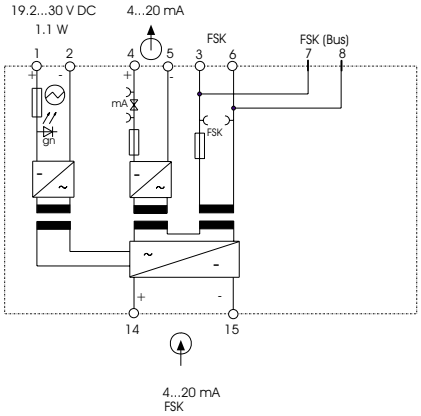

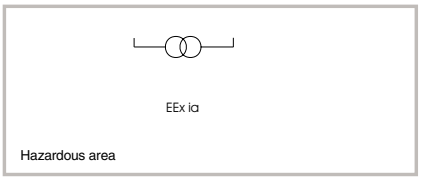

ABB Automation Products GmbH · Borsigstr. 2 · D-63755 Alzenau · Phone +49(0)60 23 - 92 0 · Fax +49(0)60 23 - 92 33 00 · http://www.abb.com/automation

Subject to technical changes.

Printed in the Fed. Rep. of Germany 12.00

Input Isolator Ex

1 channel, HART

V17151-825

- **Input isolator for extra powered HART transmitters (Flowmeters)**
- **Galvanic isolation between input/output/power supply and HART**
- **Testjacks for mA signal**
- **Jacks for HART communication**

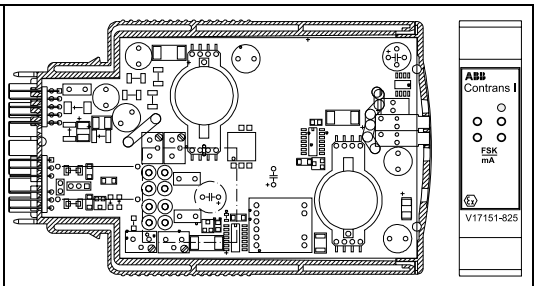

Module size 4

Module fits for:

Socket		Backplane	
V17111-11	●	V17111-2 _ _	●
V17111-12	❍	V17111-3 _ _	●
V17111-13	❍	V17111-6 _ _	●

Output	(safe area)
Output current (short-circuit proof)	4...20 mA
Transformation ratio	1:1
Detect. of wire break (input)	< 0.1 mA
Detect. of short-circuit (input, approx.)	23...28 mA
Load	0...600 Ω
Residual ripple (peak-to-peak)	< 0.25 %
Communication	
via mA signal	
via jacks 2 x 2 mm (front)	
Permeable protocol	HART
Bandwidth	500 Hz...10 kHz

Input	(hazardous area)
Input current	4...20 mA
Short circuit current	23...28 mA
Residual ripple (peak-to-peak)	< 100 mV
Voltage drop in input	< 3 V
Explosion protection	[EEx ia] IIC
Certificate of conformity	PTB 98 ATEX 2183 X
Max. short-circuit current	I_o = 30.5 mA
Max. voltage	U_o = 2.9 V
Max. power	P_o = 22.1 mW

General data	
LED indicators, power “On“ (green)	
Isolation	
Input – output/power supply/FSK	2.3 kV
Output – power supply – FSK	500 V
Max. ambient temperature	-20...+60 °C
Weight	120 g
Power supply	
Rated voltage	19.2...30 V DC
Power consumption	1.1 W
Power dissipation	1.1 W
Performance under reference conditions	
Linearity deviation	< 0.1 %
Error limit	< 0.25 %
Temperature effect	< 0.1 %/10 K
Impedance effect	< 0.05 %
Response time	< 50 ms

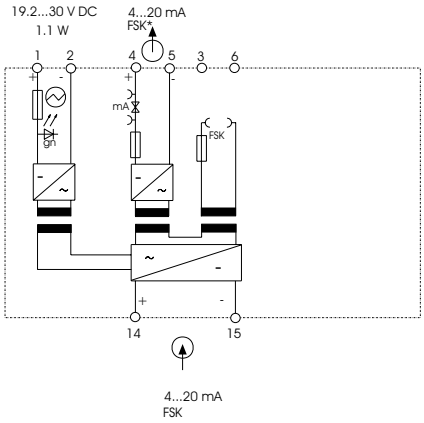

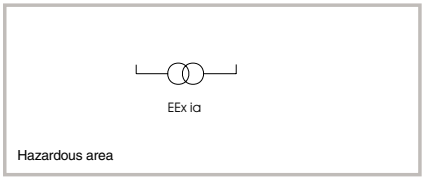

* FSK only at load ≥ 250 Ω

ABB Automation Products GmbH · Borsigstr. 2 · D-63755 Alzenau · Phone +49(0)60 23 - 92 0 · Fax +49(0)60 23 - 92 33 00 · http://www.abb.com/automation

Subject to technical changes.

Printed in the Fed. Rep. of Germany 12.00

Input Isolator Ex

2 channels, HART, FSK bus

V17151-840

- **Input isolator for extra powered HART transmitters (Flowmeters)**
- **FSK bus communication via backplanes and FSK bus amplifier**
- **Galvanic isolation between input/output/power supply and HART**
- **Jacks for HART communication**
- **Output signal free of HART signal**

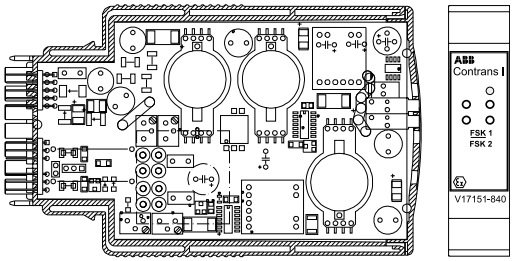

Module size 4

Module fits for:

Socket		Backplane	
V17111-11	❍	V17111-2 _ _	●
V17111-12	❍	V17111-3 _ _	●
V17111-13	❍	V17111-6 _ _	●

Output per channel	(safe area)
Output current (short-circuit proof)	4...20 mA
Transformation ratio	1:1
Detect. of wire break (input)	< 0.1 mA
Detect. of short-circuit (input, approx.)	23...28 mA
Load	0...600 Ω
Residual ripple (peak-to-peak)	< 0.25 %
Communication per channel	
via FSK bus (backplane/FSK bus amplifier)	
via jacks 2 x 2 mm (front)	
Permeable protocol	HART
Bandwidth	500 Hz...10 kHz
Input per channel	(hazardous area)
Input current	4...20 mA
Short circuit current	23...28 mA
Residual ripple (peak-to-peak)	< 100 mV
Voltage drop in input	< 3 V
Explosion protection	[EEx ia] IIC
Certificate of conformity	PTB 98 ATEX 2183 X
Max. short-circuit current	I_o = 30.5 mA
Max. voltage	U_o = 2.9 V
Max. power	P_o = 22.1 mW

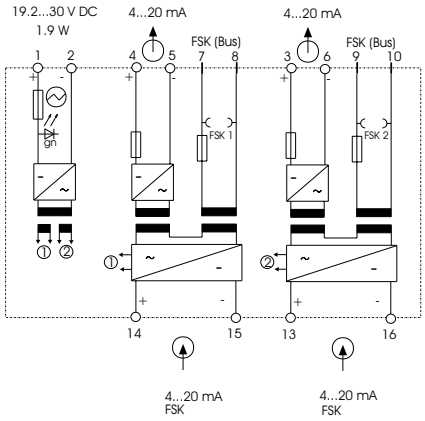

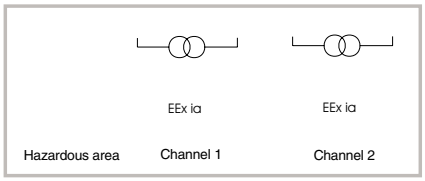

General data	
LED indicators, power “On“ (green)	
Isolation per channel	
Input – output/power supply/FSK	2.3 kV
Output – power supply – FSK	500 V
Isolation channel 1 – channel 2	
Input 1 – input 2	500 V
Output 1 – output 2	500 V
Max. ambient temperature	-20...+60 °C
Weight	140 g
Power supply	
Rated voltage	19.2...30 V DC
Power consumption	1.9 W
Power dissipation	1.9 W
Performance under reference conditions	
Linearity deviation	< 0.1 %
Error limit	< 0.25 %
Temperature effect	< 0.1 %/10 K
Impedance effect	< 0.05 %
Response time	< 50 ms

ABB Automation Products GmbH · Borsigstr. 2 · D-63755 Alzenau · Phone +49(0)60 23 - 92 0 · Fax +49(0)60 23 - 92 33 00 · http://www.abb.com/automation

Subject to technical changes.

Printed in the Fed. Rep. of Germany 12.00

Input Isolator Ex

2 channels, HART

V17151-845

- **Input isolator for extra powered HART transmitters (Flowmeters)**
- **Galvanic isolation between input/output/power supply and HART**
- **Jacks for HART communication**

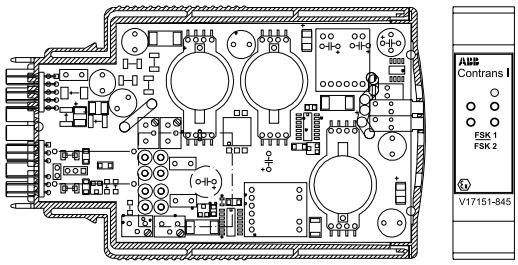

Module size 4

Module fits for:

Socket		Backplane	
V17111-11	●	V17111-2 _ _	●
V17111-12	❍	V17111-3 _ _	●
V17111-13	❍	V17111-6 _ _	●

Output per channel	(safe area)
Output current (short-circuit proof)	4...20 mA
Transformation ratio	1:1
Detect. of wire break (input)	< 0.1 mA
Detect. of short-circuit (input, approx.)	23...28 mA
Load	0...600 Ω
Residual ripple (peak-to-peak)	< 0.25 %
Communication per channel	
via mA signal	
via jacks 2 x 2 mm (front)	
Permeable protocol	HART
Bandwidth	500 Hz...10 kHz
Input per channel	(hazardous area)
Input current	4...20 mA
Short circuit current	23...28 mA
Residual ripple (peak-to-peak)	< 100 mV
Voltage drop in input	< 3 V
Explosion protection	[EEx ia] IIC
Certificate of conformity	PTB 98 ATEX 2183 X
Max. short-circuit current	I_o = 30.5 mA
Max. voltage	U_o = 2.9 V
Max. power	P_o = 22.1 mW

General data	
LED indicators, power “On“ (green)	
Isolation per channel	
Input – output/power supply/FSK	2.3 kV
Output – power supply – FSK	500 V
Isolation channel 1 – channel 2	
Input 1 – input 2	500 V
Output 1 – output 2	500 V
Max. ambient temperature	-20...+60 °C
Weight	140 g
Power supply	
Rated voltage	19.2...30 V DC
Power consumption	1.9 W
Power dissipation	1.9 W
Performance under reference conditions	
Linearity deviation	< 0.1 %
Error limit	< 0.25 %
Temperature effect	< 0.1 %/10 K
Impedance effect	< 0.05 %
Response time	< 50 ms

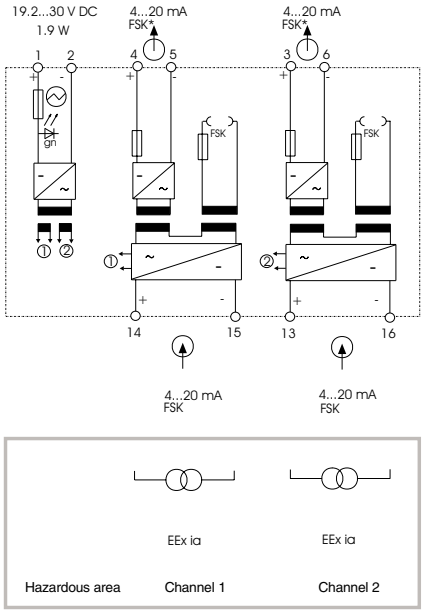

* FSK only at load ≥ 250 Ω

ABB Automation Products GmbH · Borsigstr. 2 · D-63755 Alzenau · Phone +49(0)60 23 - 92 0 · Fax +49(0)60 23 - 92 33 00 · http://www.abb.com/automation

Subject to technical changes.

Printed in the Fed. Rep. of Germany 12.00

Transmitter

Intelligent Transmitter	1 channel, LCI	V17152-31_
Temperature Transmitter Ex	1 channel, Pt 100	V17152-61_
Intelligent Transmitter Ex	1 channel, LCI	V17152-62_

	Selection table		Transmitters												
			digital				analog, Ex					digital, Ex			
			V17152-310	V17152-312	V17152-313	V17152-314	V17152-611	V17152-612	V17152-613	V17152-614	V17152-619	V17152-620	V17152-622	V17152-623	V17152-624
Control room	**Output**														
	Analog signal	0...20mA	x								x	x			
		4...20mA	x				x	x	x	x	x	x			
		0...5mA			x									x	
		0(2)...10V		x							x		x		
		0(1)...5V				x									x
	Monitoring	under- and overrange		x									x		
		Default value	x	x	x	x						x	x	x	x
	Binary	Relay	x	x	x	x						x	x	x	x
Field	**Input**														
	Sensor / actor	Resistance thermometer, 2-wire	x	x	x	x	x	x	x	x	x	x	x	x	x
		Resistance thermometer, 3-wire	x	x	x	x	x	x	x	x	x	x	x	x	x
		Resistance thermometer, 4-wire	x	x	x	x						x	x	x	x
		Thermocuple	x	x	x	x						x	x	x	x
		0...500 Ohm	x	x	x	x						x	x	x	x
		0...5000 Ohm	x	x	x	x						x	x	x	x
		± 125mV	x	x	x	x						x	x	x	x
		-125 mV...1250 mV	x	x	x	x						x	x	x	x
	Linearization	Pt100	x	x	x	x	x	x	x	x	x	x	x	x	x
		Ni100	x	x	x	x						x	x	x	x
		TC Typ B, E, J, K, L, N, R, S, T, U	x	x	x	x						x	x	x	x
		Customer spezific	x	x	x	x						x	x	x	x
	Type of measuring	Single	x	x	x	x	x	x	x	x	x	x	x	x	x
		Differential, average	x	x	x	x						x	x	x	x
	Explosion protection	[EExia]IIC / [EExib]IIC					x/x	x/x	x/x	x/x	x/x	x/x	x/x	x/x	x/x
	Monitoring	Wire break	x	x	x	x						x	x	x	x
		Short circuit	x	x	x	x						x	x	x	x
General data	Power supply	19,2...30VDC	x	x	x	x	x	x	x	x	x	x	x	x	x
		95...253VAC	o[1]	o[1]	o[1]	o[1]	o[1]	o[1]	o[1]	o[1]	o[1]	o[1]	o[1]	o[1]	o[1]
	Electrical galvanic isolation	Input-output / power supply	x	x	x	x	x	x	x	x	x	x	x	x	x
		Output - power supply	o[2]	o[2]	o[2]	o[2]	o[2]	o[2]	o[2]	o[2]	o[2]	o[2]	o[2]	o[2]	o[2]
	Programmable	via PC-software	x	x	x	x						x	x	x	x
	Measurement range	fixed range					x	x	x	x	x				
		via PC-software	x	x	x	x						x	x	x	x
	Modules fits for:														
	V17111-11, Socket		x	x	x	x	x	x	x	x	x	x	x	x	x
	V17111-12, Socket with power supply 24/24		x	x	x	x	x	x	x	x	x	x	x	x	x
	V17111-13, Socket with power supply 230/24		x	x	x	x	x	x	x	x	x	x	x	x	x
	V17111-2_ _, Backplane 8 way		x	x	x	x	x	x	x	x	x	x	x	x	x
	V17111-3_ _, Backplane 16 way		x	x	x	x	x	x	x	x	x	x	x	x	x
	V17111-6_ _, Backplane 21 way		x	x	x	x	x	x	x	x	x	x	x	x	x

x = ok; o[1]= only with V17111-13; o[2] = only with V17111-12, -13

Intelligent Transmitter V17152-31_

1 channel, LCI

- **Programmable temperature transmitter for resistance thermometer (RTD) and thermocouples**
- **Definition of parameters via LCI interface (does not require an additional power supply)**
- **Relay output for alarm**
- **Monitoring of short-circuit, wire break and internal failure**
- **Output at failure under- and overrange, custom current level**

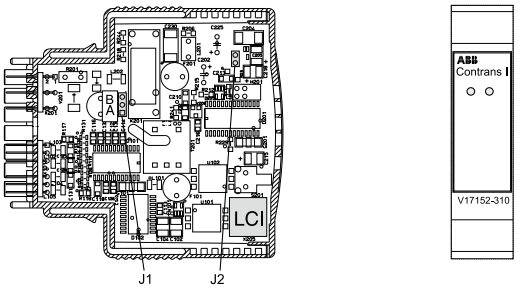

Module size 4

Module fits for:

Socket		Backplane	
V17111-11	●	V17111-2 _ _	●
V17111-12	●	V17111-3 _ _	●
V17111-13	●	V17111-6 _ _	●

Output

Type	full modulation span	load
V17152-310	0/4...20 mA (0/3.8...20.5 mA)	0...600 Ω
V17152-312	0/2...10 V (0/1.9...10.25 V)	> 100 kΩ
V17152-313	0...5 mA (0...5.13 mA)	0...2,4 kΩ
V17152-314	0/1...5 V (0/0.95...5.13 V)	> 50 kΩ
Output at failure	under- and overranging, custom current level	
Residual ripple (peak-to-peak)	< 0.25 %	
Damping	0...30 s	
Binary output (relay)		
Trigger condition	alarm set-point, wire break, short-circuit,	
	device failure (adjustment via software)	
Relay contact	1 x NO/NC (adj. via jumper J1)	
Contact rating: 250 VAC; 1A; cosφ > 0.7; 560 VA; 30 V DC; 2 A; 60 W		
Parameter setting	via software or set by manufacturer	
Acc. for parameter setting	PC with software	
	LCI adapter (connection to PC)	

Input

Sensors	Resist. thermometers (2-,3-,4 wire circuit)	
	Thermocouples with/without ref. junction	
	Resistance teletransmitters, Ω, mV inputs	
Measuring methods	Single, differential, average	
Measuring ranges	full modulation span	min. meas. span
	-200...+850 °C (Pt 100)	20 K
	-200...+850 °C (Pt 100 diff.)	40 K
	0...500 Ω; 0...5 kΩ	5 Ω; 50 Ω
	±125 mV; -125...+1250 mV	2 mV; 20 mV
Linearization acc. to DIN IEC	RTD - Pt 100, Pt 1000, Ni 100;	
	TC - B, E, J, K, L, N, R, S, T, U	
	Customer specific (max. 60 tiepoints)	

General data

LED indicator: Power "On" (green); "Failure"/"Switching State Relay" (red)	
Isolation	
Input – output/power supply	2.3 kV
Max. ambient temperature	-20...+60 °C
Weight	90 g
Power supply	
Rated voltage	19.2...30 V DC
Power consumption	approx. 1.0 W
Characteristics under reference conditions	
Linearity deviation	< 0.1 %
Error limit	< 0.2 K/< 0.2 % / < 80 mΩ (0...500 Ω)
	< 0.2 K/< 0.2 % / < 0.8 Ω (0...5 kΩ)
	< 0.2 K/< 0.2 % / < 10 µV (-125...+125 mV)
	< 100 µV/<0.2 % / (-125...+1250 V)
	Additional error through ref. junction: 0.5 K
Temperature effect	< 0.1 %/10 K (at < -5 °C 0.25%/10 K)
Impedance effect	< 0.05 %
Response time	< 250 ms (TC), < 500 ms (RTD)

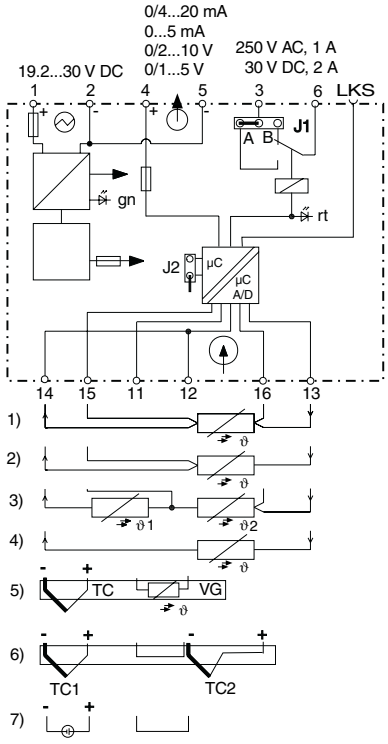

Functions of the plug-in jumpers J.:

J1 Relay output
A = NO contact; B = NC contact

J2 Parameter setting interlock
closed = inactive
open (parked) = active

The positions illustrated on the circuit diagram represented standard adjustments (delivery status)

VG Reference junction Catalog No. 0317093
LKS Local Communication Interface
1) Resistance thermometers, Ω sensor in 4-wire circuit
2) Resistance thermometers, Ω sensor in 3-wire circuit
3) Resistance thermometers, Ω sensor in diff./average
4) Resistance thermometers, Ω sensor in 2-wire circuit
5) Thermocouple with internal reference junction
6) Thermocouple, mV sensor in difference/average (without reference junction short-circuit to terminals 11/12)
7) mV sensor

Standard parameter setting:
(delivery status, if no customer specifications)
Sensor: Pt 100, 3-wire circuit
Measuring method: single
Measuring range: 0...100 °C
Output: acc. to type 4...20 mA, 0...5 mA, 0...10 V, 0...5 V
Output at failure: overranging
Binary output: sensor error

ABB Automation Products GmbH · Borsigstr. 2 · D-63755 Alzenau · Phone +49(0)60 23 - 92 0 · Fax +49(0)60 23 - 92 33 00 · http://www.abb.com/automation

Subject to technical changes.

Printed in the Fed. Rep. of Germany 12.00

Ordering information		Catalog No.
Intelligent Transmitter, 1 channel, LCI		V17152-31_
Output	0/4...20 mA	0
	0/2...10 V	2
	0...5 mA	3
	0/1...5 V	4
Accessories		
Internal reference junction (Pt 100)		0317093
Parameter definition software (without customer-specific characteristic)*		7957781
LCI adapter		0317135
Notes: The internal reference junction is not included and has to be ordered separately. The termination of the reference junction according to the connection diagram.		

* with customer-specific characteristic use SMART VISION

ABB Automation Products GmbH · Borsigstr. 2 · D-63755 Alzenau · Phone +49(0)60 23 - 92 0 · Fax +49(0)60 23 - 92 33 00 · http://www.abb.com/automation

Subject to technical changes. Printed in the Fed. Rep. of Germany 12.00

Temperature Transmitter Ex

Pt 100, 1 channel

V17152-61_

- **Connection of resistance thermometer Pt 100**
- **Input [EEx ia] IIC**
- **Line break monitoring, rise or drop**

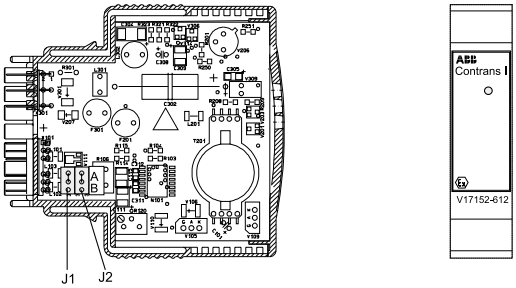

Module size 2

Module fits for:			
Socket		Backplane	
V17111-11	●	V17111-2 _ _	●
V17111-12	●	V17111-3 _ _	●
V17111-13	●	V17111-6 _ _	●

Output

Connection	Terminals 4(+); 5(-)
Output current	4...20 mA, temperature linear
	(optional 0...20 mA, 0...10 V)[1)]
Wire break at input	> 22 mA/< 3,6 mA (rise/drop)
Load	0...600 Ω
Residual ripple	< 0,25 %
	(peak-to-peak – parasitic voltage at input)

Output

Connection	Terminals 12, 13, 14, 15
	for resistance thermometer Pt 100
Input circuit	2-, 3-wire circuit
Line resistance	0 Ω for 2-wire circuit
	(10 Ω for ext. line balancing optional)
Measurement start	-100 °C
Max. measuring range	-100...+850 °C
Min. measuring span	60 °C
Explosion protection	[EEx ia] IIC
Certificate of conformity	PTB No. Ex-97.D.2030 X
Max. short-circuit current	I_o = 19 mA
Max. voltage	U_o = 20 V
Max. capacity	P_o = 95 mW
Permitted external inductance	L_a = 75 mH
Permitted external capacitance	C_a = 140 nF

General data

Display	green LED – power “On“
Test voltage	2.3 kV input – output/power supply
Max. ambient temperature	-20...+60 °C
Weight	90 g
Power supply	
Connection	Terminals 1(+); 2(-)
Rated voltage	19.2...30 V DC
Power consumption	approx. 1.0 W
Characteristics under reference conditions	
Linearity deviation	< 0.1 %
Measurement deviation	< 0.5 %
Temperature effect	< 0.1 %/10 K for -5...+60 °C
	< 0.2 %/10 K for -20...-5 °C
Load effect	< 0.05 % in load range 0...600 Ω
Response time	< 350 ms

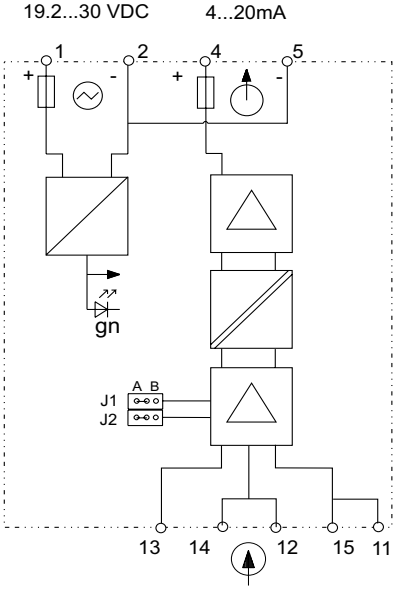

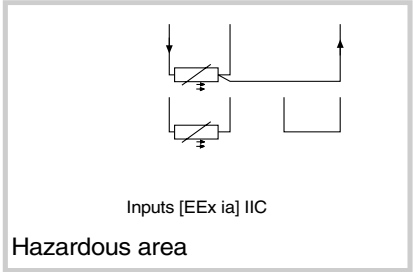

Functions of the plug-in jumpers J.:

J1/J2 Wire break monitoring
A = output signal, rise
B = output signal, drop

The positions illustrated on the circuit diagram represented standard adjustments (delivery status)

ABB Automation Products GmbH · Borsigstr. 2 · D-63755 Alzenau · Phone +49(0)60 23 - 92 0 · Fax +49(0)60 23 - 92 33 00 · http://www.abb.com/automation

Subject to technical changes.

Printed in the Fed. Rep. of Germany 12.00

Ordering information	Catalog No.
Temperature Transmitter Ex, Pt 100, 1 channel	V17152-61_
Meas. range 0... 60 °C, 3-wire, 4...20 mA	1
0...100 °C, 3-wire, 4...20 mA	2
0...150 °C, 3-wire, 4...20 mA	3
0...200 °C, 3-wire, 4...20 mA	4
.....[2)]	9

[2)] Example: 100...200 °C/2-wire/0...20 mA

ABB Automation Products GmbH · Borsigstr. 2 · D-63755 Alzenau · Phone +49(0)60 23 - 92 0 · Fax +49(0)60 23 - 92 33 00 · http://www.abb.com/automation

Subject to technical changes.

Printed in the Fed. Rep. of Germany 12.00

Intelligent Transmitter Ex

1 channel, LCI

V17152-62_

- **Programmable temperature transmitter for resistance thermometer (RTD) and thermocouples**
- **Definition of parameters via LCI interface (does not require an additional power supply)**
- **Relay output for alarm**
- **Monitoring of short-circuit, wire break and internal failure**

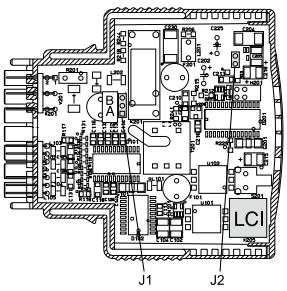

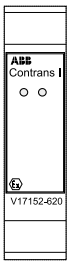

Module size 4

Module fits for:

Socket		Backplane	
V17111-11	●	V17111-2 _ _	●
V17111-12	●	V17111-3 _ _	●
V17111-13	●	V17111-6 _ _	●

Output

Type	full modulation span	load
V17152-620	0/4...20 mA (0/3.8...20.5 mA)	0...600 Ω
V17152-622	0/2...10 V (0/1.9...10.25 V)	> 100 kΩ
V17152-623	0...5 mA (0...5.13 mA)	0...2,4 kΩ
V17152-624	0/1...5 V (0/0.95...5.13 V)	> 50 kΩ
Output at failure	under- and overranging, custom current level	
Residual ripple (peak-to-peak)	< 0.25 %	
Damping	0...30 s	
Binary output (relay)		
Trigger condition: alarm set-point, wire break, short-circuit, device failure		
Relay contact	1 x NO/NC (adj. via jumper J1)	
Contact rating: 250 VAC; 1A; cosφ > 0.7; 560 VA; 30 V DC; 2 A; 60 W		

Input

Sensors	Resist. thermometers (2-,3-,4 wire circuit)	
	Thermocouples with/without ref. junction	
	Resistance teletransmitters, Ω, mV inputs	
Measuring methods	Single, differential, average	
Measuring ranges	full modulation span	min. meas. span
	-200...+850 °C (Pt 100)	20 K
	-200...+850 °C (Pt 100 diff.)	40 K
	0...500 Ω; 0...5 kΩ	5 Ω; 50 Ω
	±125 mV; -125...+1250 mV	2 mV; 20 mV
Linearization acc. to DIN IEC	RTD - Pt 100, Pt 1000, Ni 100;	
	TC - B, E, J, K, L, N, R, S, T, U	
	Customer specific (max. 60 tiepoints)	
Explosion protection	[EEx ia] IIC	
Certificate of conformity	PTB 99 ATEX 2013 X	
Max. short-circuit current	I_o = 2 mA	
Max. voltage	U_o = 5,4 V	
Max. power	P_o = 2 mW	
Permitted external inductance	L_a = 5 mH	
Permitted external capacitance	C_a = 1650 nF	
General data		
LED indicator: power "On" (green)/"Failure"/"Switching State Relay" (red)		
Isolation		
Input – output/power supply/FSK	2.3 kV	
Max. ambient temperature	-20...+60 °C	
Weight	90 g	
Power supply	∿	
Rated voltage	19.2...30 V DC	
Power consumption	approx. 1.0 W	
Characteristics under reference conditions		
Linearity deviation	< 0.1 %	
Error limit	< 0.2 K/< 0.2 % / < 80 mΩ (0...500 Ω)	
(additional error through	< 0.2 K/< 0.2 % / < 0.8 Ω (0...5 kΩ)	
reference junction: 0.5 K)	< 0.2 K/< 0.2 % / < 10 µV (-125...+125 mV)	
	< 100 µV/<0.2 % / (-125...+1250 V)	
Temperature effect	< 0.1 %/10 K (at < -5 °C 0.25%/10 K)	
Impedance effect	< 0.05 %	
Response time	< 250 ms (TC), < 500 ms (RTD)	

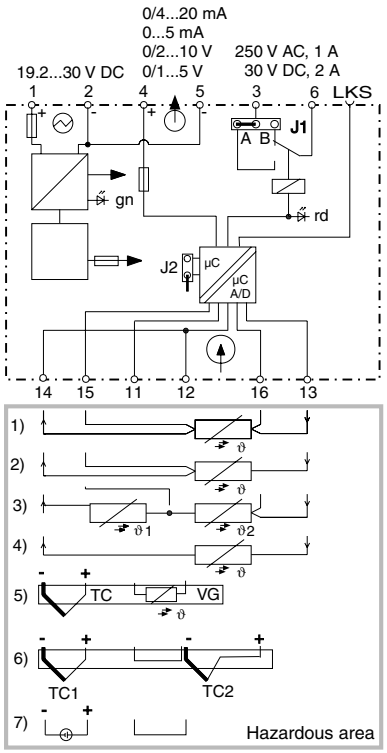

Functions of the plug-in jumpers J.:

J1 Relay output
A = NO contact; B = NC contact

J2 Parameter setting interlock
closed = inactive
open (parked) = active

The positions illustrated on the circuit diagram represented standard adjustments (delivery status)

VG Reference junction Catalog No. 0317093
LKS Local Communication Interface
1) Resistance thermometers, Ω sensor in 4-wire circuit
2) Resistance thermometers, Ω sensor in 3-wire circuit
3) Resistance thermometers, Ω sensor in diff./average
4) Resistance thermometers, Ω sensor in 2-wire circuit
5) Thermocouple with internal reference junction*
6) Thermocouple, mV sensor in difference/average (without reference junction short-circuit to terminals 11/12)
7) mV sensor

Standard parameter setting:
(delivery status, if no customer specifications)
Sensor: Pt 100, 3-wire circuit
Measuring method: single
Measuring range: 0...100 °C
Output: acc. to type 4...20 mA, 0...5 mA, 0...10 V, 0...5 V
Output at failure: overranging
Binary output: sensor error

ABB Automation Products GmbH · Borsigstr. 2 · D-63755 Alzenau · Phone +49(0)60 23 - 92 0 · Fax +49(0)60 23 - 92 33 00 · http://www.abb.com/automation

Subject to technical changes.

Printed in the Fed. Rep. of Germany 12.00

Ordering information		Catalog No.
Intelligent Transmitter Ex, 1 channel, LCI		V17152-62_
Output	0/4...20 mA	0
	0/2...10 V	2
	0...5 mA	3
	0/1...5 V	4
Accessories		
Internal reference junction (Pt 100)		0317093
Parameter definition software (without customer-specific characteristic)*		7957781
LCI adapter		0317135
Note: The internal reference junction is not included and has to be ordered separately. The termination of the reference junction according to the connection diagram.		

* with customer-specific characteristic use SMART VISION

ABB Automation Products GmbH · Borsigstr. 2 · D-63755 Alzenau · Phone +49(0)60 23 - 92 0 · Fax +49(0)60 23 - 92 33 00 · http://www.abb.com/automation

Subject to technical changes.

Printed in the Fed. Rep. of Germany 12.00

Output Isolators

Loop Powered Isolator	1 channel	V17153-11
Loop Powered Isolator	1 channel, bypass	V17153-115
Loop Powered Isolator	2 channels	V17153-13
Isolating Driver	1 channel	V17153-21
Isolating Driver	1 channel, HART	V17153-22
Isolating Driver	1 channel, HART, FSK bus	V17153-420
Loop Powered Isolator Ex	1 channel	V17153-51
Loop Powered Isolator Ex	1 channel, bypass	V17153-515
Loop Powered Isolator Ex	1 channel, HART	V17153-52
Isolating Driver Ex	1 channel	V17153-61
Isolating Driver Ex	1 channel, HART	V17153-62
Isolating Driver Ex	1 channel, HART, FSK bus	V17153-820
Isolating Driver Ex	1 channel, HART	V17153-825
Isolating Driver Ex	2 channels, HART, FSK bus	V17153-840
Isolating Driver Ex	2 channels, HART	V17153-845

	Selection table		Loop powered isolator			Isolating driver			Loop powered isolator Ex			Isolating driver Ex					
			V17153-11	V17153-115	V17153-13	V17153-21	V17153-22	V17153-420	V17153-51	V17153-515	V17153-52	V17153-61	V17153-62	V17153-820	V17153-825	V17153-840	V17153-845
Control room	**Input**																
	Analog signal	0...20mA	x	x	x				x	x	x						
		4...20mA	x	x	x	x	x	x	x	x	x	x	x	x	x	x	x
	Output signal with FSK signal						x	x			x	x	x	x	x	x	x
	Output signal free of FSK signal																
	Multichannel	Channels			2											2	2
	Bypass			x						x							
Field	**Output**																
	Sensor / actor	0...20mA	x	x	x				x	x							
		4...20mA	x	x	x	x	x	x	x	x	x	x	x	x	x	x	x
		FSK(HART)					x	x			x		x	x	x	x	x
	Explosion protection	[EExia]IIC / [EExib]IIC							-/x	-/x	-/x	x/x	x/x	x/x	x/x	x/x	x/x
General data	Power supply	19,2...30VDC				x	x	x				x	x	x	x	x	x
		95...253VAC				o[1]	o[1]					o[1]	o[1]				
	Electrical galvanic isolation	Output - input / power supply	x	x	x	x	x	x	x	x	x	x	x	x	x	x	x
		Input - power supply				o[2]	o[2]	x				o[2]	o[2]	x	x	x	x
		Input (4...20mA) -FSK						x						x	x	x	x
		Channel 1 - channel 2			x												x
	Communication	Point to point (FSK -HART)									x		x	x	x	x	x
		FSK -Bus (HART)						x						x		x	
	Test jacks	mA						x						x	x		
		FSK						x			x			x	x	x	x
	Modules fits for:																
	V17111-11, Socket		x	x	x	x	x	x	x	x	x	x	x	x	x	x	x
	V17111-12, Socket with power supply 24/24					x	x					x	x				
	V17111-13, Socket with power supply 230/24					x	x					x	x				
	V17111-2_ _, Backplane 8 way		x	x	x	x	x	x	x	x	x	x	x	x	x	x	x
	V17111-3_ _, Backplane 16 way		x	x	x	x	x	x	x	x	x	x	x	x	x	x	x
	V17111-6_ _, Backplane 21 way		x	x	x	x	x	x	x	x	x	x	x	x	x	x	x

x = ok; o[1]= only with V17111-13; o[2] = only with V17111-12, -13.

Loop Powered Isolator

V17153-11

1 channel

- **Electrical isolation for standard signals 0(4)...20 mA (I/P converter, positioner)**
- **Low voltage drop**

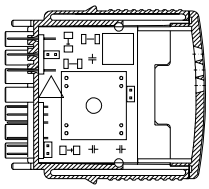

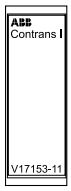

Module size 1

Module fits for:			
Socket		Backplane	
V17111-11	●	V17111-2 _ _	●
V17111-12	❍	V17111-3 _ _	●
V17111-13	❍	V17111-6 _ _	●

Input

Input current	(0)4...20 mA
Overranging	> 23.6 mA, max. 40 mA

Output

Output current (short-circuit proof)	(0)4...20 mA
Transformation ratio	1:1
Detect. of overranging (input, approx.)	> 23.6 mA, max. 40 mA
Load	0...750 Ω

General data

Voltage drop	< 1.5 V
Isolation	
Input – output	1.35 kV[1)]
Max. ambient temperature	-20...+60 °C
Weight	40 g
Performance under reference conditions	
Linearity deviation	< 0.1 %
Error limit	< 0.1 %
Temperature effect	< 0.1 %/10 K
Impedance effect	< 0.18 %
Response time	< 50 ms

[1)] Rating voltage 50 V acc. to DIN EN 61010

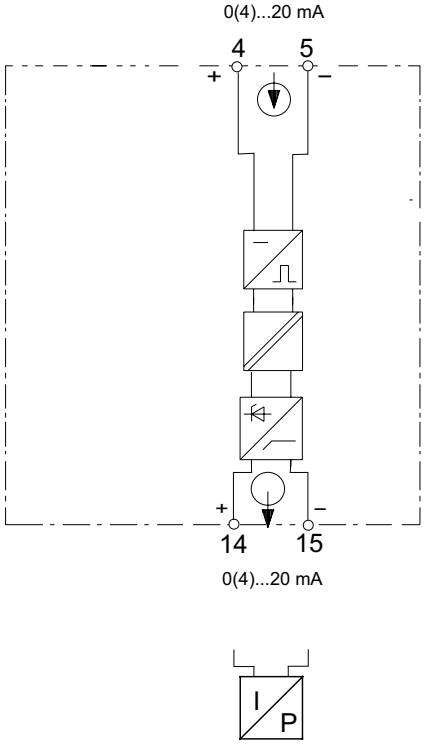

ABB Automation Products GmbH · Borsigstr. 2 · D-63755 Alzenau · Phone +49(0)60 23 - 92 0 · Fax +49(0)60 23 - 92 33 00 · http://www.abb.com/automation

Subject to technical changes.

Printed in the Fed. Rep. of Germany 12.00

Loop Powered Isolator

V17153-115

1 channel, bypass

- **Electrical isolation for standard signals 0(4)...20 mA (I/P converter, positioner)**
- **At a wire-break in the output signal, the input signal does not interrupt**

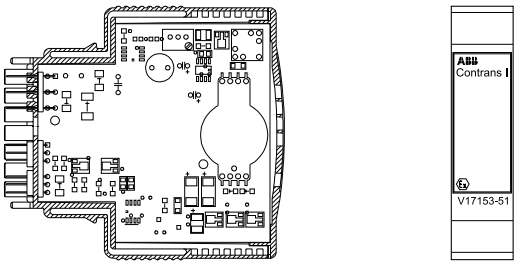

Module size 2

Module fits for:			
Socket		Backplane	
V17111-11	●	V17111-2 _ _	●
V17111-12	❍	V17111-3 _ _	●
V17111-13	❍	V17111-6 _ _	●

Input	
Input current	(0)4...20 mA
Overranging	> 22 mA, max. 40 mA
Output	
Output current (short-circuit proof)	(0)4...20 mA
Transformation ratio	1:1
Detect. of overranging (input, approx.)	22...28,5 mA
Load	0...600 Ω
General data	
Voltage drop	< 3.8 V/< 6.8 V load
	160...600/0...160 Ω
Isolation	
Input – output	2.3 kV
Max. ambient temperature	-20...+60 °C
Weight	90 g
Performance under reference conditions	
Linearity deviation	< 0.1 %
Error limit	< 0.1 %
Temperature effect	< 0.1 %/10 K
Impedance effect	< 0.18 %
Response time	< 50 ms

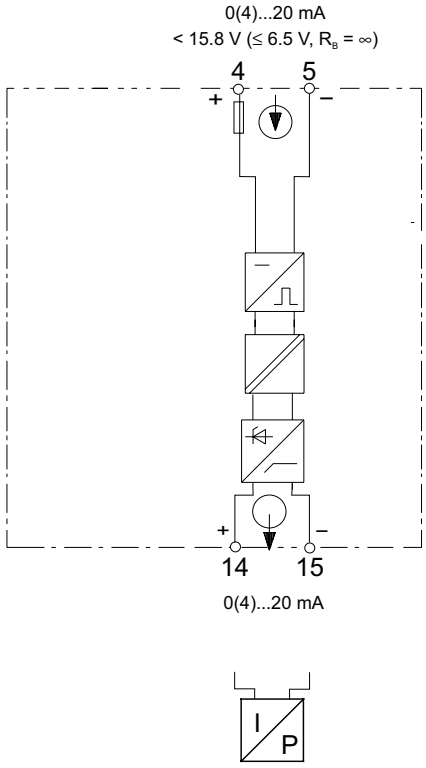

ABB Automation Products GmbH · Borsigstr. 2 · D-63755 Alzenau · Phone +49(0)60 23 - 92 0 · Fax +49(0)60 23 - 92 33 00 · http://www.abb.com/automation

Subject to technical changes.

Printed in the Fed. Rep. of Germany 12.00

Loop Powered Isolator

V17153-13

2 channels

- **Electrical isolation for standard signals 0(4)...20 mA (I/P converter, positioner)**
- **Low voltage drop**

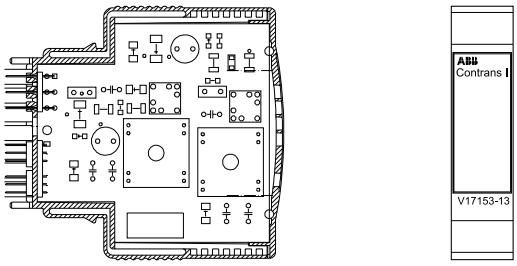

Module size 2

Input per channel	
Input current	(0)4...20 mA
Overranging	> 23.6 mA, max. 40 mA
Output per channel	
Output current (short-circuit proof)	(0)4...20 mA
Transformation ratio	1:1
Detect. of overranging (input, approx.)	> 23.6 mA, max. 40 mA
Load	0...750 Ω
General data	
Voltage drop	< 1.5 V
Isolation	
Input – output	1.35 kV[1)]
Channel 1 – channel 2	500 V
Max. ambient temperature	-20...+60 °C
Weight	90 g
Performance under reference conditions	
Linearity deviation	< 0.1 %
Error limit	< 0.1 %
Temperature effect	< 0.1 %/10 K
Impedance effect	< 0.18 %
Response time	< 50 ms

[1)] Rating voltage 50 V acc. to DIN EN 61010

Module fits for:

Socket		Backplane	
V17111-11	●	V17111-2 _ _	●
V17111-12	❍	V17111-3 _ _	●
V17111-13	❍	V17111-6 _ _	●

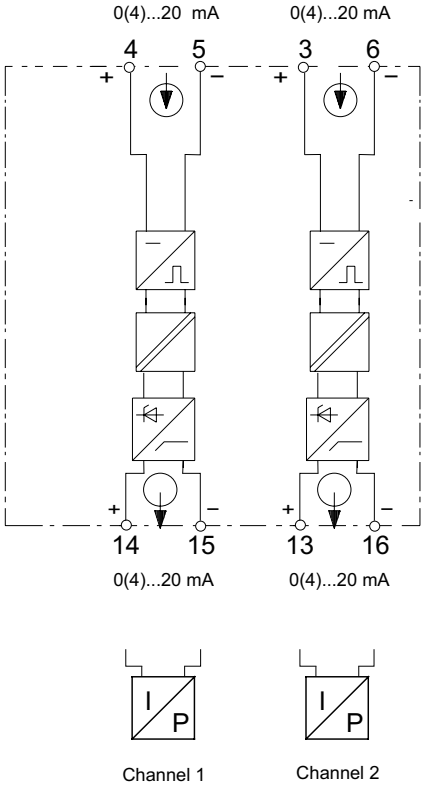

ABB Automation Products GmbH · Borsigstr. 2 · D-63755 Alzenau · Phone +49(0)60 23 - 92 0 · Fax +49(0)60 23 - 92 33 00 · http://www.abb.com/automation

Subject to technical changes.

Printed in the Fed. Rep. of Germany 12.00

Isolating Driver

1 channel

V17153-21

- **Isolating driver for I/P converter**
- **Minimal power consumption**

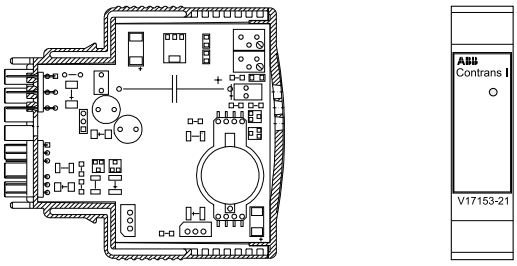

Module size 2

Module fits for:			
Socket		Backplane	
V17111-11	●	V17111-2 _ _	●
V17111-12	●	V17111-3 _ _	●
V17111-13	●	V17111-6 _ _	●

Input	
Input current	4...20 mA
Voltage drop	< 1.5 V
Output	
Output current (short-circuit proof)	4...20 mA
Transformation ratio	1:1
Detect. of wire-break (input)	< 0.1 mA
Detect. of overranging (input, approx.)	22...30 mA
Load	0...600 Ω
Residual ripple (peak-to-peak)	< 0.25 %
General data	
LED indicators, power “On“ (green)	
Isolation	
Output – input/power supply	2.3 kV
Max. ambient temperature	-20...+60 °C
Weight	90 g
Power supply	
Rated voltage	19.2...30 V DC
Power consumption	0.7 W
Power dissipation	0.7 W
Performance under reference conditions	
Linearity deviation	< 0.1 %
Error limit	< 0.25 %
Temperature effect	< 0.1 %/10 K
Impedance effect	< 0.1 %
Response time	< 50 ms

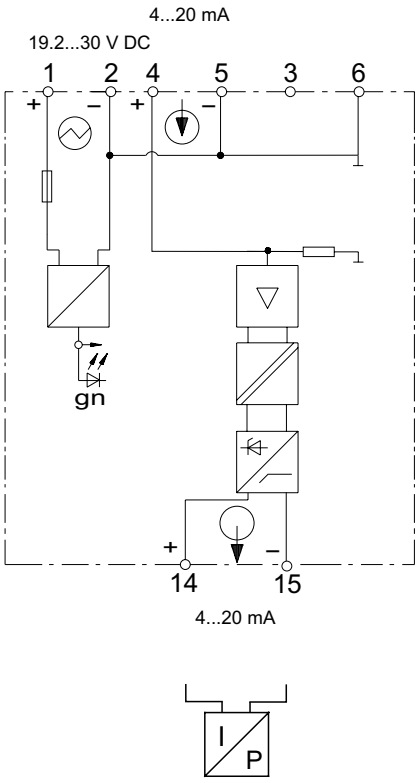

ABB Automation Products GmbH · Borsigstr. 2 · D-63755 Alzenau · Phone +49(0)60 23 - 92 0 · Fax +49(0)60 23 - 92 33 00 · http://www.abb.com/automation

Subject to technical changes.

Printed in the Fed. Rep. of Germany 12.00

Isolating Driver

1 channel, HART

V17153-22

- **Isolating driver for I/P converter with HART communication**
- **Point to point communication**
- **Minimal power consumption**

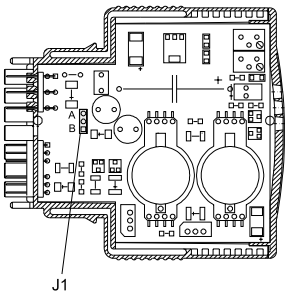

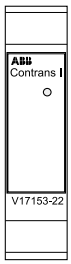

Module size 2

Module fits for:

Socket		Backplane	
V17111-11	●	V17111-2 _ _	●
V17111-12	●	V17111-3 _ _	●
V17111-13	●	V17111-6 _ _	●

Input	
Input current	4...20 mA
Voltage drop	< 1.5 V; < 6.5 V (if source not HART-kompatible)
Communication	
via terminals 3/6	
via mA signal	
Permeable protocol	HART
Bandwidth	500 Hz...10 kHz
Output	
Output current (short-circuit proof)	4...20 mA
Transformation ratio	1:1
Detect. of wire-break (input)	< 0.1 mA
Detect of overranging (input, approx.)	22...30 mA
Load	0...600 Ω
Residual ripple (peak-to-peak)	< 0.25 %
General data	
LED indicators, power “On“ (green)	
Isolation	
Output – input/power supply/FSK	2.3 kV
Max. ambient temperature	-20...+60 °C
Weight	90 g
Power supply	
Rated voltage	19.2...30 V DC
Power consumption	0.7 W
Power dissipation	0.7 W
Performance under reference conditions	
Linearity deviation	< 0.1 %
Error limit	< 0.25 %
Temperature effect	< 0.1 %/10 K
Impedance effect	< 0.1 %
Response time	< 50 ms

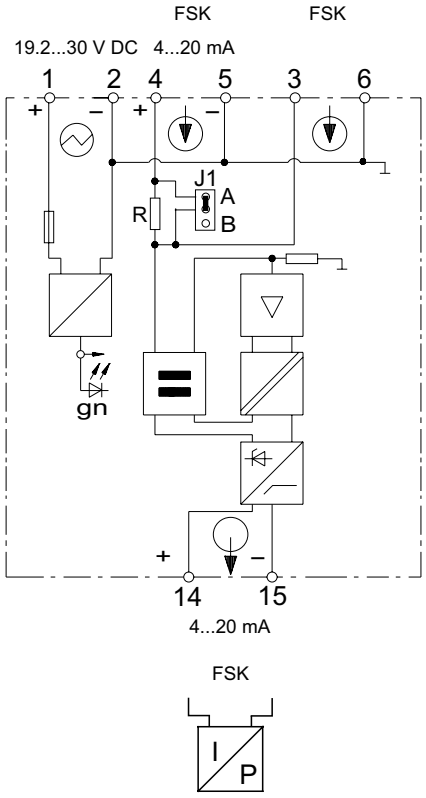

Functions of the plug-in jumpers J.:

J1 Minimum impedance for HHT to terminals 3/6
A = U_i <1.5 V
(Source to terminal 4/5 HART-compatible)
B = U_i < 6.5 V
(Source to terminal 4/5 not HART-compatible)

The positions illustrated on the circuit diagram represented standard adjustments (delivery status)

ABB Automation Products GmbH · Borsigstr. 2 · D-63755 Alzenau · Phone +49(0)60 23 - 92 0 · Fax +49(0)60 23 - 92 33 00 · http://www.abb.com/automation

Subject to technical changes.

Printed in the Fed. Rep. of Germany 12.00

Isolating Driver

1 channel, HART, FSK bus

V17153-420

- **Isolating driver for I/P converter, positioner with HART-communication**
- **FSK bus communication via backplanes and FSK bus amplifier**
- **Galvanic isolation between input/output/power supply and HART**
- **Testjacks for mA signal**
- **Jacks for HART communication**

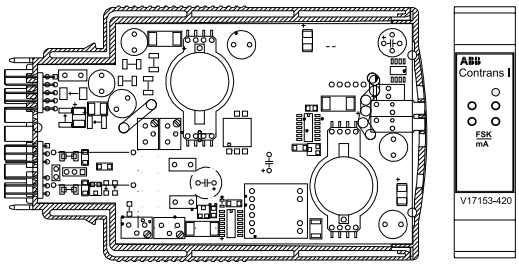

Module size 4

Module fits for:

Socket		Backplane	
V17111-11	❍	V17111-2 _ _	●
V17111-12	❍	V17111-3 _ _	●
V17111-13	❍	V17111-6 _ _	●

Input	
Input current	4...20 mA
Voltage drop	< 6.9 V
Communication	
via FSK bus (backplane/FSK bus amplifier)	
via jacks 2 x 2 mm (front)	
Permeable protocol	HART
Bandwidth	500 Hz...10 kHz
Output	
Output current (short-circuit proof)	4...20 mA
Transformation ratio	1:1
Detect. of wire break (input)	< 0.1 mA
Detect. of overranging (input, approx.)	23...29 mA
Load	0...700 Ω
Residual ripple (peak-to-peak)	< 0.25 %
General data	
LED indicators, power “On“ (green)	
Isolation	
Output – input/power supply/FSK	2.3 kV
Input – power supply – FSK	500 V
Max. ambient temperature	-20...+60 °C
Weight	120 g
Power supply	
Rated voltage	19.2...30 V DC
Power consumption	1.1 W
Power dissipation	1.1 W
Performance under reference conditions	
Linearity deviation	< 0.1 %
Error limit	< 0.25 %
Temperature effect	< 0.1 %/10 K
Impedance effect	< 0.05 %
Response time	< 50 ms

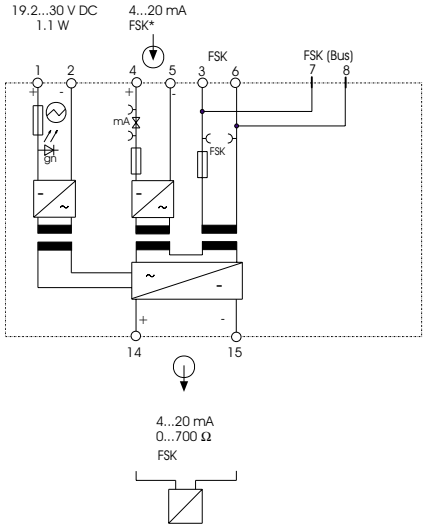

* FSK only at load ≥ 250 Ω for the current source

ABB Automation Products GmbH · Borsigstr. 2 · D-63755 Alzenau · Phone +49(0)60 23 - 92 0 · Fax +49(0)60 23 - 92 33 00 · http://www.abb.com/automation

Subject to technical changes.

Printed in the Fed. Rep. of Germany 12.00

Loop Powered Isolator Ex

1 channel

V17153-51

- **Electrical isolation for standard signals 0(4)...20 mA (I/P converter, positioner)**
- **Low voltage drop**

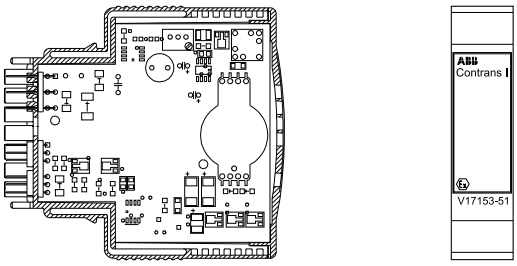

Module size 2

Input	(safe area)
Input current	(0)4...20 mA
Overranging	> 22 mA, max. 40 mA
Output	(hazardous area)
Output current (short-circuit proof)	(0)4...20 mA
Transformation ratio	1:1
Detect. of overranging (input, approx.)	22...28.5 mA
Load	0...600 Ω
Explosion protection	[EEx ib] IIC
Certificate of conformity	PTB 00 ATEX 2017 X
Max. short-circuit current	I_o = 28.5 mA
Max. voltage	U_o = 19 V
Max. power	P_o = 542 mW
Permitted external inductance	L_a = 1.3 mH
Permitted external capacitance	C_a = 110 nF
General data	
Voltage drop	< 3 V/6 V load
	120...600/0...120 Ω
Isolation	
Input – output	2.3 kV
Max. ambient temperature	-20...+60 °C
Weight	90 g
Performance under reference conditions	
Linearity deviation	< 0.1 %
Error limit	< 0.1 %
Temperature effect	< 0.1 %/10 K
Impedance effect	< 0.18 %
Response time	< 50 ms

Module fits for:

Socket		Backplane	
V17111-11	●	V17111-2 _ _	●
V17111-12	❍	V17111-3 _ _	●
V17111-13	❍	V17111-6 _ _	●

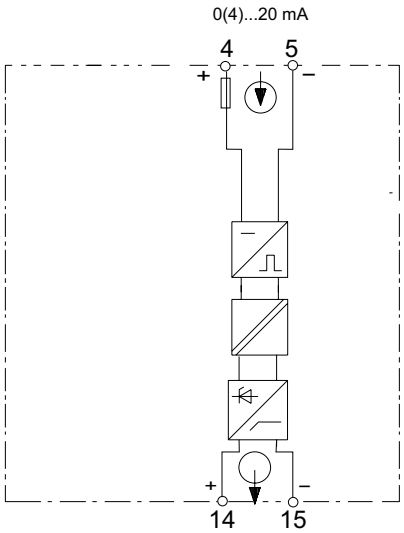

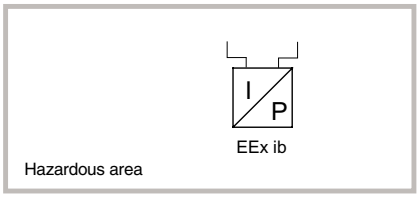

ABB Automation Products GmbH · Borsigstr. 2 · D-63755 Alzenau · Phone +49(0)60 23 - 92 0 · Fax +49(0)60 23 - 92 33 00 · http://www.abb.com/automation

Subject to technical changes.

Printed in the Fed. Rep. of Germany 12.00

Loop Powered Isolator Ex

1 channel, bypass

V17153-515

- **Electrical isolation for standard signals 0(4)...20 mA (I/P converter, positioner)**
- **The input signal is not interrupted at break on output (bypass)**

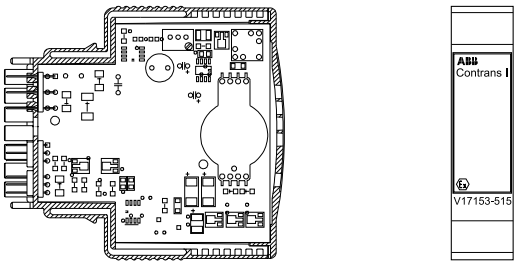

Module size 2

Input	(safe area)
Input current	(0)4...20 mA
Overranging	> 22 mA, max. 40 mA
Output	(hazardous area)
Output current (short-circuit proof)	(0)4...20 mA
Transformation ratio	1:1
Detect. of overranging (input, approx.)	22...28.5 mA
Load	0...600 Ω
Explosion protection	[EEx ib] IIC
Certificate of conformity	PTB 00 ATEX 2017 X
Max. short-circuit current	I_o = 28.5 mA
Max. voltage	U_o = 19 V
Max. power	P_o = 542 mW
Permitted external inductance	L_a = 1.3 mH
Permitted external capacitance	C_a = 110 nF
General data	
Voltage drop	< 3,8 V/6,8 V load
	120...600/0...120 Ω
Isolation	
Input – output	2.3 kV
Max. ambient temperature	-20...+60 °C
Weight	90 g
Performance under reference conditions	
Linearity deviation	< 0.1 %
Error limit	< 0.1 %
Temperature effect	< 0.1 %/10 K
Impedance effect	< 0.18 %
Response time	< 50 ms

Module fits for:

Socket		Backplane	
V17111-11	●	V17111-2 _ _	●
V17111-12	❍	V17111-3 _ _	●
V17111-13	❍	V17111-6 _ _	●

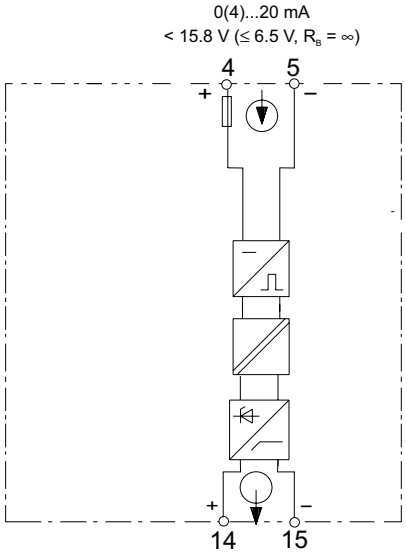

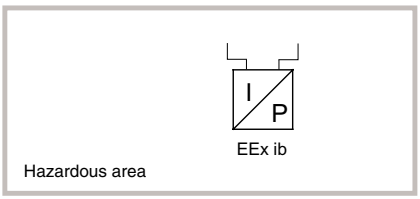

ABB Automation Products GmbH · Borsigstr. 2 · D-63755 Alzenau · Phone +49(0)60 23 - 92 0 · Fax +49(0)60 23 - 92 33 00 · http://www.abb.com/automation

Subject to technical changes.

Printed in the Fed. Rep. of Germany 12.00

Loop Powered Isolator Ex

1 channel, HART

V17153-52

- **Electrical isolation for standard signals 0(4)...20 mA (I/P converter, positioner)**
- **Point to point communication**
- **Low voltage drop**

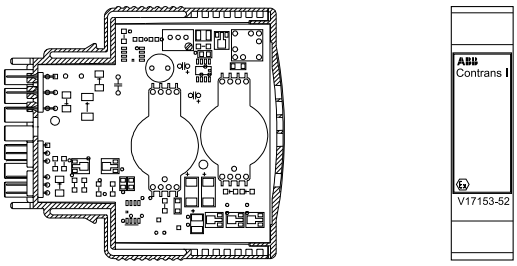

Module size 2

Module fits for:			
Socket		Backplane	
V17111-11	●	V17111-2 _ _	●
V17111-12	❍	V17111-3 _ _	●
V17111-13	❍	V17111-6 _ _	●

Input	(safe area)
Input current	4...20 mA
Overranging	> 23.6 mA; max. 40 mA
Communication	
via terminals 3/6	
via mA signal 4/5	
Permeable protocol	HART
Bandwidth	500 Hz...10 kHz
Output	(hazardous area)
Output current (short-circuit proof)	0(4)...20 mA
Transformation ratio	1:1
Detect. of overranging (input, approx.)	22...28.5 mA
Load	0...600 Ω
Explosion protection	[EEx ib] IIC
Certificate of conformity	PTB 00 ATEX 2017 X
Max. short-circuit current	I_o = 28.5 mA
Max. voltage	U_o = 19 V
Max. power	P_o = 542 mW
Permitted external inductance	L_a = 1.3 mH
Permitted external capacitance	C_a = 110 nF
General data	
Voltage drop	< 3.5 V/< 6 V at load
	120...600/0...120 Ω
Isolation	
Output – input/FSK	2.3 kV
Max. ambient temperature	-20...+60 °C
Weight	90 g
Performance under reference conditions	
Linearity deviation	< 0.1 %
Error limit	< 0.1 %
Temperature effect	< 0.1 %/10 K
Impedance effect	< 0.18 %
Response time	< 50 ms

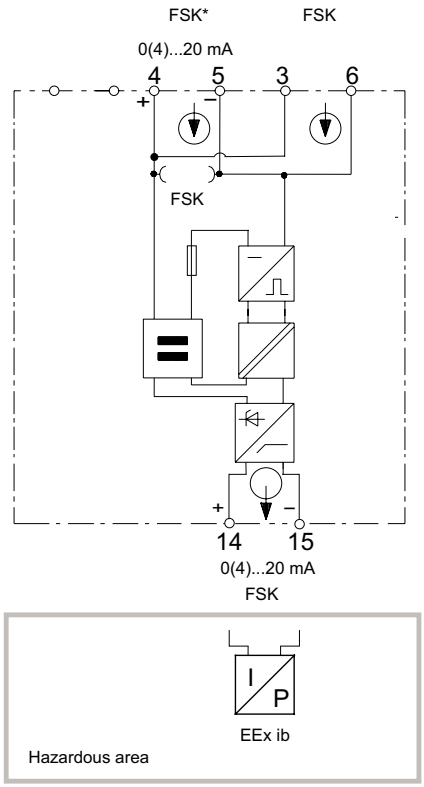

* FSK only at load ≥ 250 Ω for the current source

ABB Automation Products GmbH · Borsigstr. 2 · D-63755 Alzenau · Phone +49(0)60 23 - 92 0 · Fax +49(0)60 23 - 92 33 00 · http://www.abb.com/automation

Subject to technical changes.

Printed in the Fed. Rep. of Germany 12.00

Isolating Driver Ex

1 channel

V17153-61

- **Isolating driver for I/P converter, positioner with HART-communication**
- **Minimal power consumption**

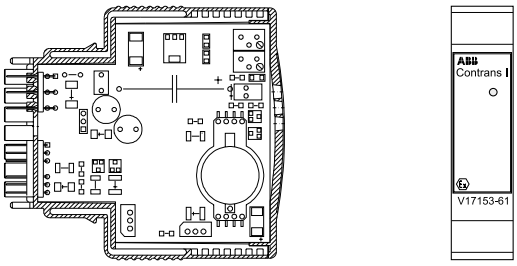

Module size 2

Module fits for:

Socket		Backplane	
V17111-11	●	V17111-2 _ _	●
V17111-12	●	V17111-3 _ _	●
V17111-13	●	V17111-6 _ _	●

Input	(safe area)
Input current	4...20 mA
Voltage drop	< 1.5 V
Output	(hazardous area)
Output current (short-circuit proof)	4...20 mA
Transformation ratio	1:1
Detect. of wire break (input)	< 0.1 mA
Detect. of overranging (input, approx.)	22...30 mA
Load	0...600 Ω
Residual ripple (peak-to-peak)	< 0.25 %
Explosion protection	[EEx ib] IIC
Certificate of conformity	PTB No. Ex-95.D.2109 X
Max. short-circuit current	I_o = 28.5 mA
Max. voltage	U_o = 20 V
Max. power	P_o = 570 mW
Permitted external inductance	L_a = 1.3 mH
Permitted external capacitance	C_a = 95 nF
General data	
LED indicators, power “On“ (green)	
Isolation	
Output – input/power supply	2.3 kV
Max. ambient temperature	-20...+60 °C
Weight	90 g
Power supply	
Rated voltage	19.2...30 V DC
Power consumption	0.7 W
Power dissipation	0.7 W
Performance under reference conditions	
Linearity deviation	< 0.1 %
Error limit	< 0.25 %
Temperature effect	< 0.1 %/10 K
Impedance effect	< 0.1 %
Response time	< 50 ms

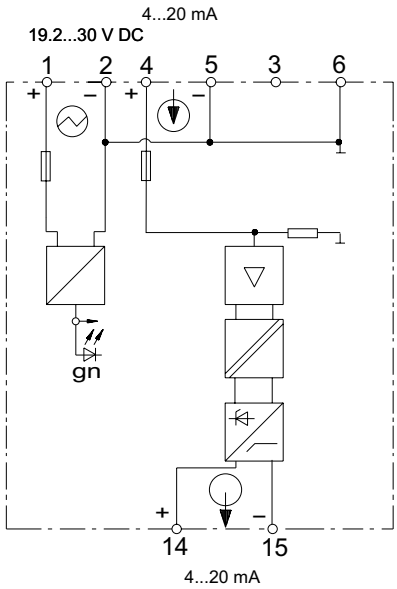

ABB Automation Products GmbH · Borsigstr. 2 · D-63755 Alzenau · Phone +49(0)60 23 - 92 0 · Fax +49(0)60 23 - 92 33 00 · http://www.abb.com/automation

Subject to technical changes.

Printed in the Fed. Rep. of Germany 12.00

Isolating Driver Ex

1 channel, HART

V17153-62

- **Isolating driver for I/P converter, positioner with HART-communication**
- **Point to point communication**
- **Minimal power consumption**

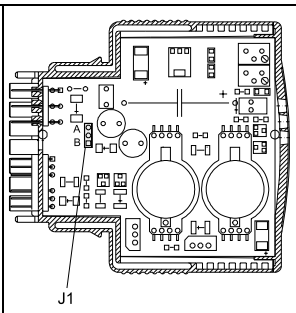

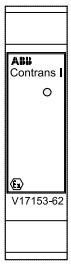

Module size 2

Module fits for:

Socket		Backplane	
V17111-11	●	V17111-2 _ _	●
V17111-12	●	V17111-3 _ _	●
V17111-13	●	V17111-6 _ _	●

Input	(safe area)
Input current	4...20 mA
Voltage drop	< 1.5 V; < 6.5 V (if source not HART compatible)
Communication	
via terminals 3/6	
via mA signal 4/5	
Permeable protocol	HART
Bandwidth	500 Hz...10 kHz
Output	(hazardous area)
Output current (short-circuit proof)	4...20 mA
Transformation ratio	1:1
Detect. of wire break (input)	< 0.1 mA
Detect. of overranging (input, approx.)	22...30 mA
Load	0...600 Ω
Residual ripple (peak-to-peak)	< 0.25 %
Explosion protection	[EEx ib] IIC
Certificate of conformity	PTB No. Ex-95.D.2190 X
Max. short-circuit current	I_o = 28.5 mA
Max. voltage	U_o = 20 V
Max. power	P_o = 570 mW
Permitted external inductance	L_a = 1.3 mH
Permitted external capacitance	C_a = 95 nF
General data	
LED indicators, power “On“ (green)	
Isolation	
Output – input/power supply/FSK	2.3 kV
Max. ambient temperature	-20...+60 °C
Weight	90 g
Power supply	
Rated voltage	19.2...30 V DC
Power consumption	0.7 W
Power dissipation	0.7 W
Performance under reference conditions	
Linearity deviation	< 0.1 %
Error limit	< 0.25 %
Temperature effect	< 0.1 %/10 K
Impedance effect	< 0.1 %
Response time	< 50 ms

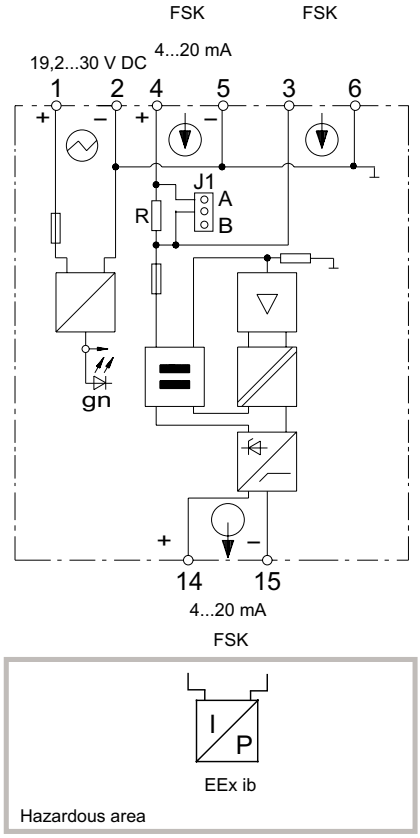

Functions of the plug-in jumpers J.:

J1 Minimum impedance for HHT to terminals 3/6
A = U_i <1.5 V
(Source to terminal 4/5 HART-compatible)
B = U_i < 6.5 V
(Source to terminal 4/5 not HART-compatible)

The positions illustrated on the circuit diagram represented standard adjustments (delivery status)

ABB Automation Products GmbH · Borsigstr. 2 · D-63755 Alzenau · Phone +49(0)60 23 - 92 0 · Fax +49(0)60 23 - 92 33 00 · http://www.abb.com/automation

Subject to technical changes.

Printed in the Fed. Rep. of Germany 12.00

Isolating Driver Ex

1 channel, HART, FSK bus

V17153-820

- **Isolating driver for I/P converter, positioner with HART-communication**
- **FSK bus communication via backplanes and FSK bus amplifier**
- **Galvanic isolation between input/output/power supply and HART**
- **Testjacks for mA signal**
- **Jacks for HART communication**

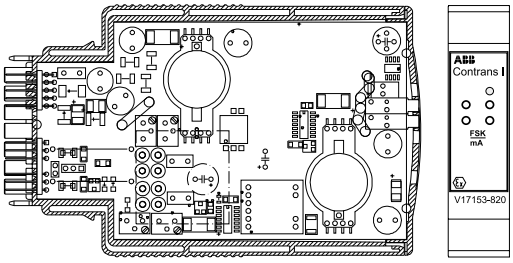

Module size 4

Module fits for:

Socket		Backplane	
V17111-11	❍	V17111-2 _ _	●
V17111-12	❍	V17111-3 _ _	●
V17111-13	❍	V17111-6 _ _	●

Input	(safe area)
Input current	4...20 mA
Voltage drop	< 6.9 V
Communication	
via FSK bus (backplane/FSK bus amplifier)	
via jacks 2 x 2 mm (front)	
Permeable protocol	HART
Bandwidth	500 Hz...10 kHz
Output	(hazardous area)
Output current (short-circuit proof)	4...20 mA
Transformation ratio	1:1
Detect. of wire break (input)	< 0.1 mA
Detect. of overranging (input, approx.)	23...29 mA
Load	0...700 Ω
Residual ripple (peak-to-peak)	< 0.25 %
Explosion protection	[EEx ia] IIC
Certificate of conformity	PTB 98 ATEX 2183 X
Max. short-circuit current	I_o = 93 mA
Max. voltage	U_o = 26.3 V
Max. power	P_o = 610 mW
Permitted external inductance	L_a = 4.1 mH
Permitted external capacitance	C_a = 97 nF
General data	
LED indicators, power “On“ (green)	
Isolation	
Input – output/power supply/FSK	2.3 kV
Output – power supply – FSK	500 V
Max. ambient temperature	-20...+60 °C
Weight	120 g
Power supply	
Rated voltage	19.2...30 V DC
Power consumption	1.1 W
Power dissipation	1.1 W
Performance under reference conditions	
Linearity deviation	< 0.1 %
Error limit	< 0.25 %
Temperature effect	< 0.1 %/10 K
Impedance effect	< 0.05 %
Response time	< 50 ms

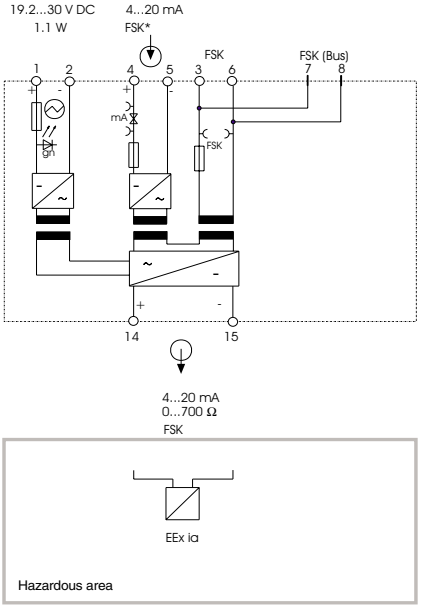

* FSK only at load ≥ 250 Ω for the current source

ABB Automation Products GmbH · Borsigstr. 2 · D-63755 Alzenau · Phone +49(0)60 23 - 92 0 · Fax +49(0)60 23 - 92 33 00 · http://www.abb.com/automation

Subject to technical changes.

Printed in the Fed. Rep. of Germany 12.00

Isolating Driver Ex

1 channel, HART

V17153-825

- **Isolating driver for I/P converter, positioner with HART-communication**
- **Galvanic isolation between input/output/power supply and HART**
- **Testjacks for mA signal**
- **Jacks for HART communication**

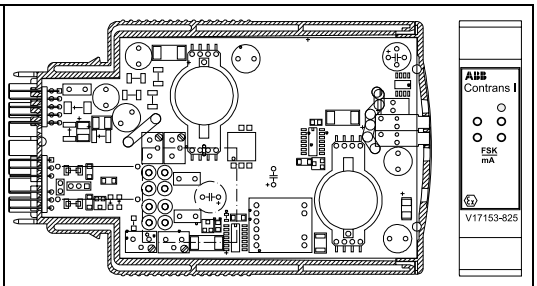

Module size 4

Module fits for:

Socket		Backplane	
V17111-11	●	V17111-2 _ _	●
V17111-12	❍	V17111-3 _ _	●
V17111-13	❍	V17111-6 _ _	●

Input	(safe area)
Input current	4...20 mA
Voltage drop	< 6.9 V
Communication	
via mA signal	
via jacks 2 x 2 mm (front)	
Permeable protocol	HART
Bandwidth	500 Hz...10 kHz
Output	(hazardous area)
Output current (short-circuit proof)	4...20 mA
Transformation ratio	1:1
Detect. of wire break (input)	< 0.1 mA
Detect. of overranging (input, approx.)	23...29 mA
Load	0...700 Ω
Residual ripple (peak-to-peak)	< 0.25 %
Explosion protection	[EEx ia] IIC
Certificate of conformity	PTB 98 ATEX 2183 X
Max. short-circuit current	I_o = 93 mA
Max. voltage	U_o = 26.3 V
Max. power	P_o = 610 mW
Permitted external inductance	L_a = 4.1 mH
Permitted external capacitance	C_a = 97 nF
General data	
LED indicators, power “On“ (green)	
Isolation	
Input – output/power supply/FSK	2.3 kV
Output – power supply – FSK	500 V
Max. ambient temperature	-20...+60 °C
Weight	120 g
Power supply	
Rated voltage	19.2...30 V DC
Power consumption	1.1 W
Power dissipation	1.1 W
Performance under reference conditions	
Linearity deviation	< 0.1 %
Error limit	< 0.25 %
Temperature effect	< 0.1 %/10 K
Impedance effect	< 0.05 %
Response time	< 50 ms

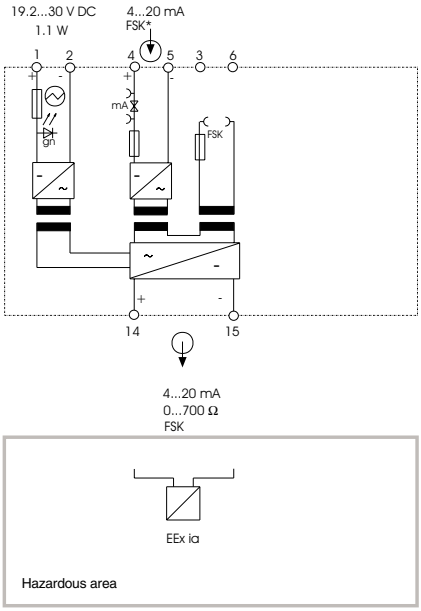

* FSK only at load ≥ 250 Ω for the current source

ABB Automation Products GmbH · Borsigstr. 2 · D-63755 Alzenau · Phone +49(0)60 23 - 92 0 · Fax +49(0)60 23 - 92 33 00 · http://www.abb.com/automation

Subject to technical changes.

Printed in the Fed. Rep. of Germany 12.00

Isolating Driver Ex

2 channels, HART, FSK bus

V17153-840

- **Isolating driver for I/P converter, positioner with HART-communication**
- **FSK bus communication via backplanes and FSK bus amplifier**
- **Galvanic isolation between input/output/power supply and HART**
- **Jacks for HART communication**

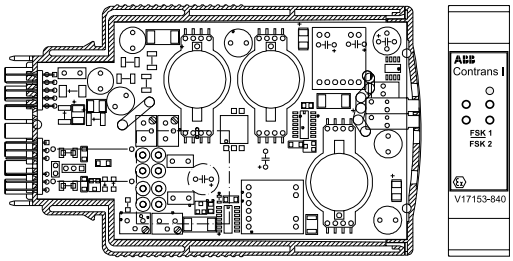

Module size 4

Module fits for:

Socket		Backplane	
V17111-11	❍	V17111-2 _ _	●
V17111-12	❍	V17111-3 _ _	●
V17111-13	❍	V17111-6 _ _	●

Input per channel	(safe area)
Input current	4...20 mA
Voltage drop	< 6.9 V
Communication per channel	
via FSK bus (backplane/FSK bus amplifier)	
via jacks 2 x 2 mm (front)	
Permeable protocols	HART
Bandwidth	500 Hz...10 kHz
Output per channel	(hazardous area)
Output current (short-circuit proof)	4...20 mA
Transformation ratio	1:1
Detect. of wire break (input)	< 0.1 mA
Detect. of short-circuit (input, approx.)	23...28 mA
Load	0...600 Ω
Residual ripple (peak-to-peak)	< 0.25 %
Overranging in input	23...28 mA
Explosion protection	[EEx ia] IIC
Certificate of conformity	PTB 98 ATEX 2183 X
Max. short-circuit current	I_o = 93 mA
Max. voltage	U_o = 26.3 V
Max. power	P_o = 610 mW
Permitted external inductance	L_a = 4.1 mH
Permitted external capacitance	C_a = 97 nF
General data	
LED indicators, power “On“ (green)	
Isolation per channel	
Input – output/power supply/FSK	2.3 kV
Output – power supply/FSK	500 V
Isolation channel 1 – channel 2	
Input 1 – input 2	500 V
Output 1 – output 2	500 V
Max. ambient temperature	-20...+60 °C
Weight	140 g
Power supply	
Rated voltage	19.2...30 V DC
Power consumption	2,2 W
Power dissipation	2,2 W
Performance under reference conditions	
Linearity deviation	< 0.1 %
Error limit	< 0.25 %
Temperature effect	< 0.1 %/10 K
Impedance effect	< 0.05 %
Response time	< 50 ms

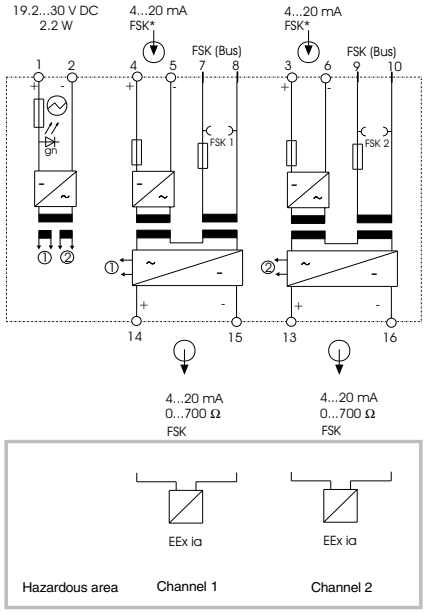

* FSK only at load ≥ 250 Ω for the current source

ABB Automation Products GmbH · Borsigstr. 2 · D-63755 Alzenau · Phone +49(0)60 23 - 92 0 · Fax +49(0)60 23 - 92 33 00 · http://www.abb.com/automation

Subject to technical changes.

Printed in the Fed. Rep. of Germany 12.00

Isolating Driver Ex

2 channels, HART

V17153-845

- **Isolating driver for I/P converter, positioner with HART-communication**
- **FSK bus communication via backplanes and FSK bus amplifier**
- **Galvanic isolation between input/output/power supply and HART**
- **Jacks for HART communication**

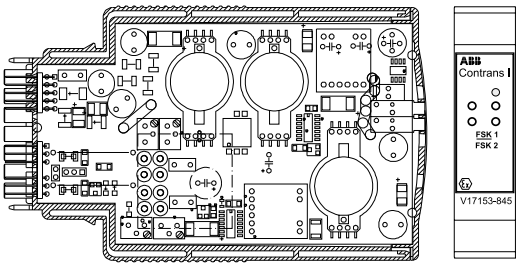

Module size 4

Module fits for:

Socket		Backplane	
V17111-11	●	V17111-2 _ _	●
V17111-12	❍	V17111-3 _ _	●
V17111-13	❍	V17111-6 _ _	●

Input per channel	(safe area)
Input current	4...20 mA
Voltage drop	< 6.9 V
Communication per channel	
via mA signal	
via jacks 2 x 2 mm (front)	
Permeable protocol	HART
Bandwidth	500 Hz...10 kHz
Output per channel	(hazardous area)
Output current (short-circuit proof)	4...20 mA
Transformation ratio	1:1
Detect. of wire break (input)	< 0.1 mA
Detect. of short-circuit (input, approx.)	23...29 mA
Load	0...600 Ω
Residual ripple (peak-to-peak)	< 0.25 %
Overranging in input	23...28 mA
Explosion protection	[EEx ia] IIC
Certificate of conformity	PTB 98 ATEX 2183 X
Max. short-circuit current	I_o = 93 mA
Max. voltage	U_o = 26.3 V
Max. power	P_o = 610 mW
Permitted external inductance	L_a = 4.1 mH
Permitted external capacitance	C_a = 97 nF
General data	
LED indicators, power “On“ (green)	
Isolation per channel	
Output – input/power supply/FSK	2.3 kV
Input – power supply – FSK	500 V
Isolation channel 1 – channel 2	
Input 1 – input 2	500 V
Output 1 – output 2	500 V
Max. ambient temperature	-20...+60 °C
Weight	140 g
Power supply	
Rated voltage	19.2...30 V DC
Power consumption	2,2 W
Power dissipation	2,2 W
Performance under reference conditions	
Linearity deviation	< 0.1 %
Error limit	< 0.25 %
Temperature effect	< 0.01 %/10 K
Impedance effect	< 0.05 %
Response time	< 50 ms

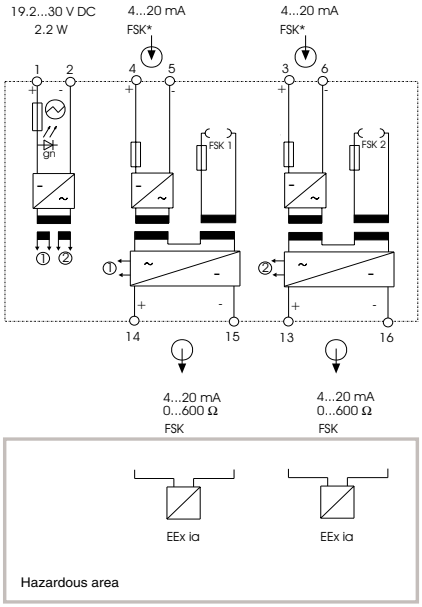

* FSK only at load ≥ 250 Ω for the current source

ABB Automation Products GmbH · Borsigstr. 2 · D-63755 Alzenau · Phone +49(0)60 23 - 92 0 · Fax +49(0)60 23 - 92 33 00 · http://www.abb.com/automation

Subject to technical changes.

Printed in the Fed. Rep. of Germany 12.00

Trip Amplifier

Trip Amplifier	2 alarms, 2 relays	V17171-11

Trip Amplifier

2 alarms, 2 relays

V17171-11

- **1 input 0(4)...20 mA**
- **2 alarms with one relay each or**
- **1 alarm with 2 relays**
- **Operating and quiescent current for each alarm**
- **with/without wire-break and short-circuit monitoring**
- **Set point adjustment with decade switch**

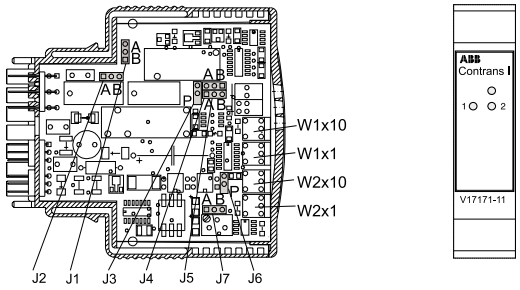

Module size 2

Module fits for:

Socket		Backplane	
V17111-11	●	V17111-2 _ _	●
V17111-12	❍	V17111-3 _ _	●
V17111-13	●	V17111-6 _ _	●

Output	
Relay contact Rs2/Rs1	NC/NO contacts (via jumpers J1/J2)
Contact rating	250 V AC, 1 A, cosφ > 0.7
	30 V DC, 2 A, resistive load
Mechanical life expectancy	> 3 · 10^7 operations
Contact life expectancy	> 10^6 operations at maximum load
Behavior during wire break	Relay drop (only for 4...20 mA,
short-circuit at input	(independent of alarm signal)
	jumper J3 = open
Input	
Input current	(0)4...20 mA
Input resistance	50 Ω
Voltage drop	≤ 1 V
Alarm section	
Number of alarms	2 (independent)
Alarm setting	1- and ten-steps
	(behind removable front cover)
Adjustment range	0...99 % (0...19.8 mA/4...19.84 mA)
Resolution	1 %
Switch hysterese	0.8 % referred to 0/4...20 mA
Effective direction	operating current (relay pick up at X > W)
	quiescent current (relay pick up at X < W)
	independent for both relays
General data	
LED display	power "On" (green)
LED display	switching status relay
	"flooded with current" (red)
Spark quenching unit	100 Ω/22 nF (between terminals 4,5/3,6)
Max. ambient temperature	-20...+60 °C
Isolation per channel	
Input – power supply	500 V
Output – power supply/input	2.3 kV
Weight	90 g
Power supply	
Connection	terminals 1(+); 2(–)
Rated voltage	19.2...30 V DC
Power consumption	approx. 0.7 W
Characteristics under reference conditions	
Temperature effect	< 0.1 %/10 K
Response time	≤ 300 ms

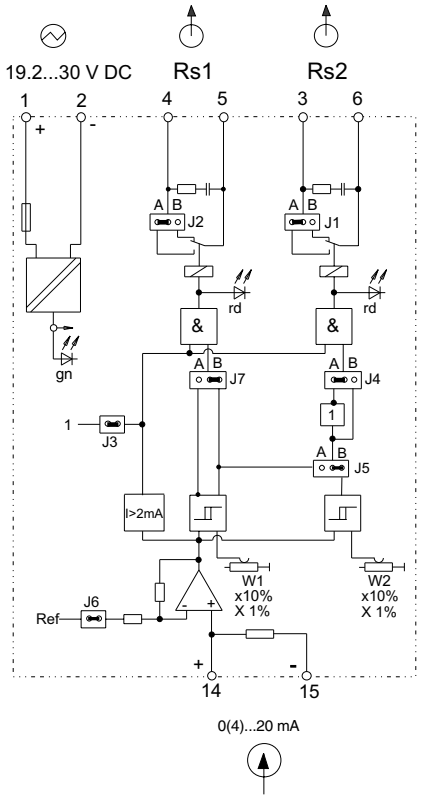

Functions of the plug-in jumpers J.:

J1/J2 Relay output Rs2/Rs1
A = NO
B = NC

J3 Line break and short-circuit monitoring (4...20 mA)
closed = inactive
open (parked) = activ

J4/J7 Effective direction
B = relay pick up at X > W (operating current)
A = relay pick up at X < W (quiescent current)

J5 Relay assignment
A = W1 affects Rs1 and Rs2 (1 alarm, 2 relays)
B = W1 affects Rs1, W2 affects Rs2 (2 alarms, 2 relays)

J6 Input
closed = 4...20 mA
open (parked) = 0...20 mA

The positions illustrated on the circuit diagram represent standard adjustments (delivery status)

ABB Automation Products GmbH · Borsigstr. 2 · D-63755 Alzenau · Phone +49(0)60 23 - 92 0 · Fax +49(0)60 23 - 92 33 00 · http://www.abb.com/automation

Subject to technical changes.

Printed in the Fed. Rep. of Germany 12.00

Sockets, Backplanes

Socket	V17111-11
Socket with power supply 24/24	V17111-12
Socket with power supply 230/24	V17111-13
Backplane, 8-way	V17111-2__
Backplane, 16-way	V17111-3__
Backplane, 21-way	V17111-6__

Dimensional drawings

- **For mounting the Contrans I modules**
- **Standard terminal layout**
- **Maintenance-free connection technique**
- **For Ex and non-Ex modules**
- **Encoding field for module assignment**

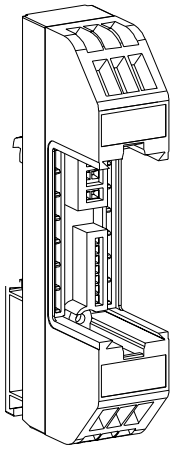

System connection

Connection	terminals 1, 2, 3, 4, 5, 6
Connection technique	6pin double-tiered terminals
	(cage clamp spring)
Rated terminal cross-section	0.08...2.5 mm^2 / AWG 26...14“
	single copper wiring, stranded
	with/without wire end ferrule[1)]

Field connection

Connection	terminals 11, 12, 13, 14, 15, 16
Connection technique	6pin double-tiered terminals
	(cage clamp spring)
Rated terminal cross-section	0.08...2.5 mm^2 / AWG 26...14“
	single copper wiring, stranded
	with/without wire end ferrule[1)]

General data

Mounting location	can be snap-fitted onto 35 mm
	standard rail to DIN EN 50022
Protected to DIN 40050	IP 20
Protection class	II (to DIN EN 61010)
Test voltage	3.7 kV terminals 1...6 – 11...16
	2.3 kV terminals 1, 2 – 4, 5 – 3, 6
	1.35 kV terminals 11, 14, 15 – 12, 13, 16
Colour	RAL 7035
Material	Polycarbonate
Weight	50 g

[1)] With wire end ferrules max. 1.5 mm^2

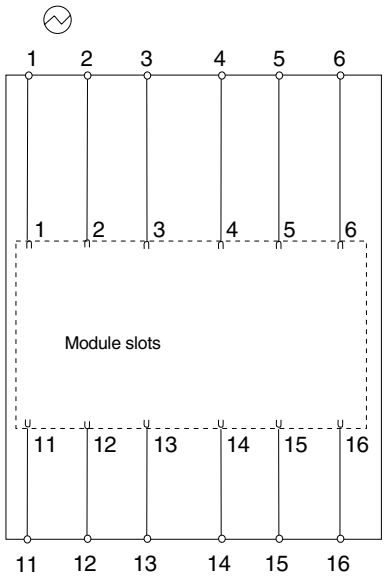

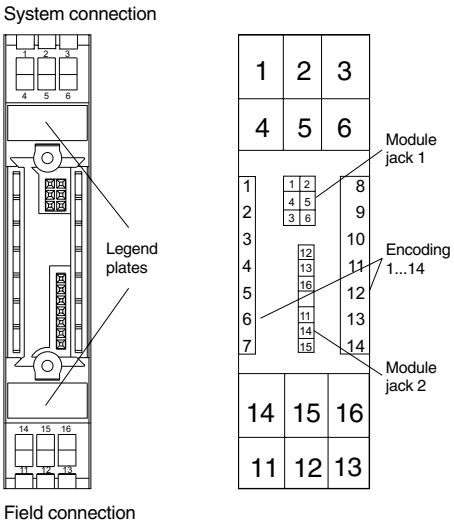

ABB Automation Products GmbH · Borsigstr. 2 · D-63755 Alzenau · Phone +49(0)60 23 - 92 0 · Fax +49(0)60 23 - 92 33 00 · http://www.abb.com/automation

Subject to technical changes.

Printed in the Fed. Rep. of Germany 12.00

Socket

with power supply unit 24/24

V17111-12

- **For installing Contrans I modules**
- **Integrated power supply unit 19...33 V/24 V**
- **Electrical isolation to mains**
- **Standard terminal layout**
- **Maintenance-free connection technique**
- **for Ex- and non-Ex modules**
- **Encoding field for module assignment**

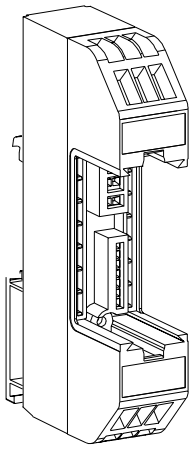

System connection

Power supply	⊗
Connection	terminals 1, 2
Rated voltage range	19.2...33 V DC
Power consumption	appr. 1.5 W for CI module V17151-2X, -6X
	appr. 1.1 W for CI module V17153-2X, -6X
Output	
Connection	power supply for the plugged modules
Isolation	the output is electrically isolated from
	the power supply
Rated voltage	24 V ± 10 %
Rated current	83 mA, non short-circuit proof
Terminals 3...6	signal current circuits of the module
	(see module description)

Field connection

Terminals 11...16	signal current circuits of the module
	(see module description)

Safety data

Protection class	II (to DIN EN 61010-1)
Overvoltage category	II
Pollution degree	2
Type of protection	IP 20 (to EN 60259/DIN VDE 0470 part 1)
Output	functional extra-low voltage to VDE 0100
	part 410/IEC 364-4-41 with safe
	electrical isolation
Test voltages	2.3 kV power supply – 24 V module supply
	2.3 kV power supply – term. 3...6, 11...16
The requirement of the EMC guideline 89/336/EWG and	
the low voltage guideline 73/23/EWG are met	

General data

Connection technique	6-pin double-tiered terminal
	(cage clamp spring)
Rated terminal cross section	0.08...2.5 mm^2/AWG 26...14“,
	single copper wiring, stranded,
	with wire end ferrule (max. 1.5 mm^2)
Type of mounting	can be snap-fitted onto 35 mm
	standard rail to DIN EN 50022
Mounting location	outside the hazardous area
	(for the supply of Ex-modules,
	pay attention to VDE 0165)
Mounting orientation	horizontal or vertical
Ambient conditions	
Operating temperature	-20...+60 °C for horizontal mounting
	-20...+55 °C for vertical mounting
Relative humidity	< 85 %, 3K3 to IEC 721, part 3-3,
	no condensation
Weight	80 g

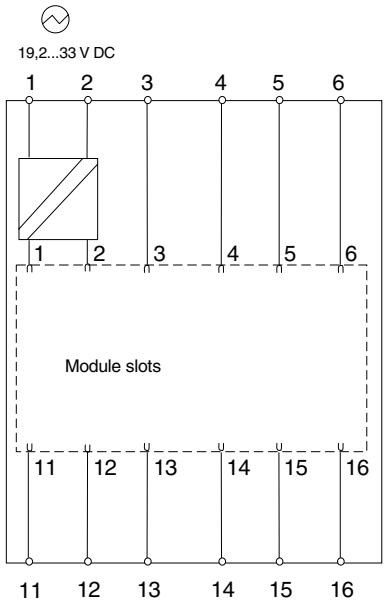

System connection

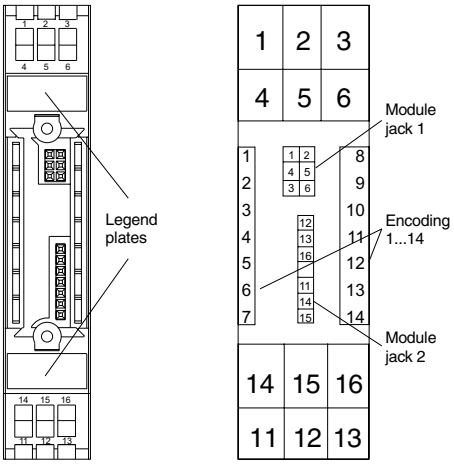

Field connection

ABB Automation Products GmbH · Borsigstr. 2 · D-63755 Alzenau · Phone +49(0)60 23 - 92 0 · Fax +49(0)60 23 - 92 33 00 · http://www.abb.com/automation

Subject to technical changes.

Printed in the Fed. Rep. of Germany 12.00

Socket

with power supply unit 230/24

V17111-13

- **For installing Contrans I modules**
- **Integrated power supply unit 95...253 V/24 V**
- **Electrical isolation to mains**
- **Standard terminal layout**
- **Maintenance-free connection technique**
- **for Ex- and non-Ex modules**
- **Encoding field for module assignment**

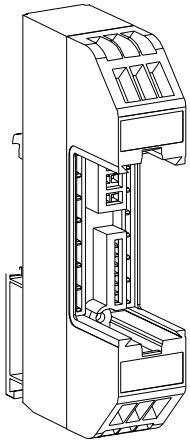

System connection

Power supply	∾
Connection	terminals 1, 2
Rated voltage range	95...253 V AC/48...62 Hz
Power consumption	appr. 1.5 W for CI module V17151-2X, -6X
	appr. 1.1 W for CI module V17153-2X, -6X
Fusing	Fuse T 0.1 A integr. in power supply unit
Output	
Connection	power supply for the plugged modules
Isolation	the output is electrically isolated from
	the power supply
Rated voltage	24 V ± 10 %
Rated current	83 mA, non short-circuit proof
Terminals 3...6	signal current circuits of the module
	(see module description)

Field connection

Terminals 11...16	signal current circuits of the module
	(see module description)

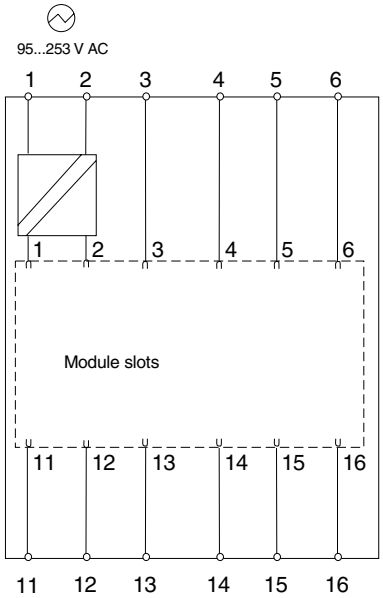

Safety data

Protection class	II (to DIN EN 61010-1)
Overvoltage category	II
Pollution degree	2
Type of protection	IP 20 (to EN 60259/DIN VDE 0470 part 1)
Output	functional extra-low voltage to VDE 0100
	part 410/IEC 364-4-41 with safe
	electrical isolation
Test voltages	2.3 kV power supply – 24 V module supply
	2.3 kV power supply – term. 3...11, 11...16

The requirement of the EMC guideline 89/336/EWG and the low voltage guideline 73/23/EWG are met

General data

Connection technique	6-pin double-tiered terminal
	(cage clamp spring)
Rated terminal cross section	0.08...2.5 mm^2/AWG 26...14“,
	single copper wiring, stranded,
	with wire end ferrule (max. 1.5 mm^2)
Type of mounting	can be snap-fitted onto 35 mm
	standard rail to DIN EN 50022
Mounting location	outside the hazardous area
	(for the supply of Ex-modules,
	pay attention to VDE 0165)
Mounting orientation	horizontal or vertical
Ambient conditions	
Operating temperature	-20...+60 °C for horizontal mounting
	-20...+55 °C for vertical mounting
Relative humidity	< 85 %, 3K3 to IEC 721, part 3-3,
	no condensation
Weight	80 g

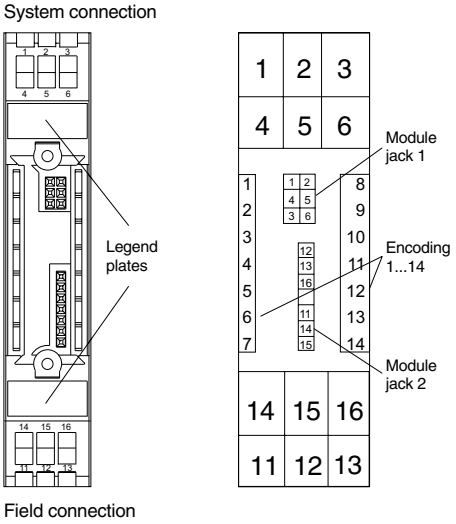

ABB Automation Products GmbH · Borsigstr. 2 · D-63755 Alzenau · Phone +49(0)60 23 - 92 0 · Fax +49(0)60 23 - 92 33 00 · http://www.abb.com/automation

Subject to technical changes.

Printed in the Fed. Rep. of Germany 12.00

Backplane

8way

V17111-2_ _

- **For installing 8 Contrans I modules**
- **Signal processing up to 16 Ex or non Ex signals**
- **Separate fusing for modules and signal circuits**
- **Simple design of FSK bus trough pluggable bus amplifier**

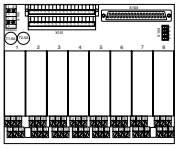

System connection

Signales	**X101/X102** (slot 1...8, terminal 3...6)
Socket/type	Pin terminal/SLD 3.5 V/36/90F 3.2 SNOR
Connector/type	Female multipoint connector/BL 3.5/18/FSNOR (for max. 1.5 mm^2 wire cross section)
Rated voltage	≤ 30 V AC/DC (functional extra low voltage with safe electrical isolation to VDE 0100 part 410/IEC 364-4-41)
FSK bus	**X110** (terminal 5...8)
Socket/type	Pin terminal/SLD 3.5 V/4/F 3.2 SNOR
Connector/type	Female multipoint connector/BL 3.5/2/FSNOR (for max. 1.5 mm^2 wire cross section)
FSK bus amplifier	X108 (slot 1...8, terminal 7, 9)
Socket/type	37pin SUB-D
Connector/type	FSK bus amplifier V17191-16 (option)
Power supply	⊘ **X1** (terminal 1...4)
Socket/type	Screw terminal for max. 2.5 mm^2 wire cross section
Rated voltage	19.2...30 V DC (see rated voltage of the CI modules)
Fusing power supply modules	T 2.5 A
Fusing power supply signals	T 1.6 A

Field connection

Signales		Slot 1...21, terminals 11...16
	V17111-221	Screw terminals for max. 2.5 mm^2 wire cross section (colour grey)
Slot	V17111-222	Pluggable screw terminals for max. 2.5 mm^2 wire cross section (colour grey)
Connector	V17111-222	Type of connector MSTB 2.5/3-ST (for max. 2.5 mm^2 wire cross section)
	V17111-251	Screw terminals for max. 2.5 mm^2 wire cross section (colour blue)
Rated voltage		250 V AC (375 V peak value to EN 50020 for Ex application)

General data

Safe electrical isolation to EN 61010/EN 50020 (Ex)	System connection – field connection, module slot – module slot
Isolation	System connection – field connection: 3.7 kV
	Module slot – module slot (field connection): 3.7 kV
	Per module slot (field connection), terminals 11, 14, 15 – 12, 13, 16: 1.35 kV
Max. ambient temperature	-20...+60 °C for horizontal mounting; -20...+55 °C for vertical mounting
Relative humidity	< 85 %, 3K3 to IEC 721, part 3-3, no condensation
Type of protect. to EN 60529/ DIN VDE 0470 part 1	IP 00 (the backplane must be so installed that at least IP 20 is guaranteed)
Mounting type	can be snapped-fitted onto 35 mm standard rails to DIN EN 50022
Mounting location	Outside hazardous area (attention to VDE 0165, IEC 79-14 in case Ex application)
Mounting orientation	horizontal or vertical
Weight	369 g

ABB Automation Products GmbH · Borsigstr. 2 · D-63755 Alzenau · Phone +49(0)60 23 - 92 0 · Fax +49(0)60 23 - 92 33 00 · http://www.abb.com/automation

Subject to technical changes.

Printed in the Fed. Rep. of Germany 12.00

System connection

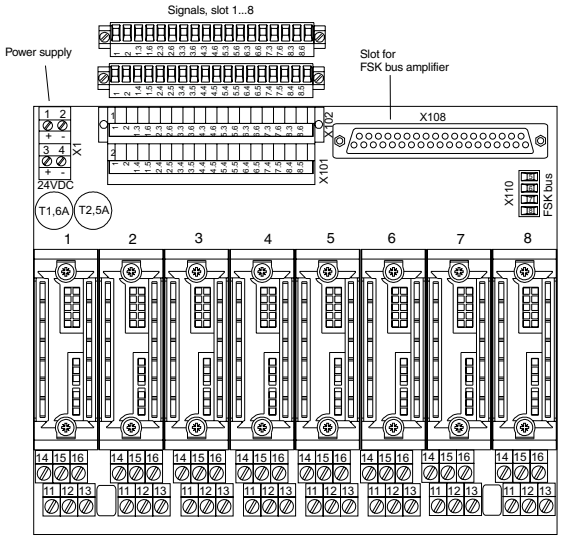

Field connection

System connection

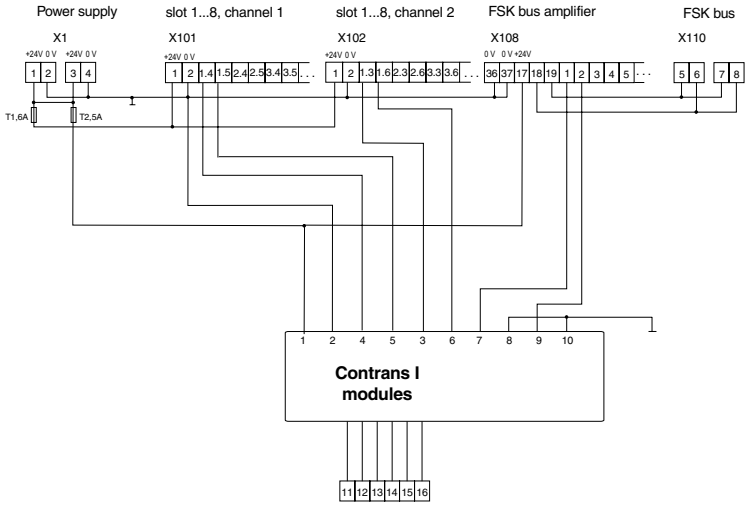

Field connection

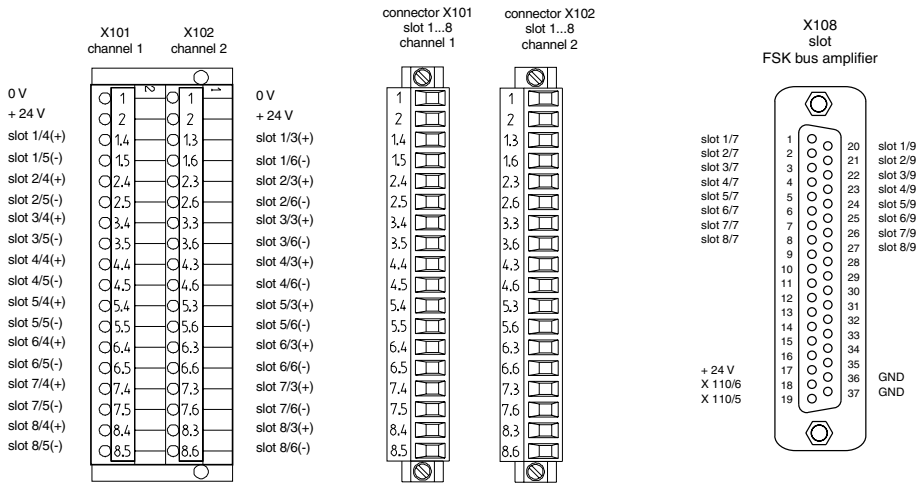

ABB Automation Products GmbH · Borsigstr. 2 · D-63755 Alzenau · Phone +49(0)60 23 - 92 0 · Fax +49(0)60 23 - 92 33 00 · http://www.abb.com/automation

Subject to technical changes.

Printed in the Fed. Rep. of Germany 12.00

Backplane

16way

V17111-3_ _

- **For installing 16 Contrans I modules**
- **Signal processing up to 32 Ex or non Ex signals**
- **Redundant power supply with signal contact**
- **Separate fusing for modules and signal circuits**
- **Simple design of FSK bus trough pluggable bus amplifier**

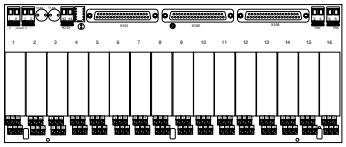

System connection

Signales	**X101/X102** (slot 1...16, terminal 3...6)
Socket/type	37 oin SUB-D
Rated voltage	≤ 30 V AC/DC (functional extra low voltage with safe electrical isolation
	to VDE 0100 part 410/IEC 364-4-41)
FSK bus	**X110** (terminal 5...8)
Socket/type	Screw terminals for max. 2.5 mm^2 wire cross section
FSK bus amplifier	X108 (slot 1...16, terminal 7, 9)
Socket/type	37pin SUB-D
Connector/type	FSK bus amplifier V17191-16/-32 (option)
Power supply	⊗ **X1** (terminal 1...4)
Socket/type	Screw terminal for max. 2.5 mm^2 wire cross section
Rated voltage	19.2...30 V DC (see rated voltage of the CI modules)
Voltage drop through	
redundant supply diodes	1.4 V
Wrong polarity protection	yes
Fusing power supply modules	T 3.15 A
Fusing power supply signals	T 2 A
Fuse monitoring	Failure of one or both fuses is signalled by the opening of the relay contact and the
	extinction of the LED
Signal contact	**X105** (terminal 43, 44 – NO contact from relais)
Socket/type	Screw terminals for max. 2.5 mm^2 wire cross section
Switching capacity	≤ 10 W, 10 VA, cosφ ≥ 0.7
Switching current	≤ 0.5 A UC
Switching voltage	≤ 50 V UC

Field connection

Signales		Slot 1...16, terminals 11...16
	V17111-331	Screw terminals for max. 2.5 mm^2 wire cross section (colour grey)
Slot	V17111-332	Pluggable screw terminals for max. 2.5 mm^2 wire cross section (colour grey)
Connector	V17111-332	Type of connector MSTB 2.5/3-ST (for max. 2.5 mm^2 wire cross section)
	V17111-351	Screw terminals for max. 2.5 mm^2 wire cross section (colour blue)
Rated voltage		250 V AC (375 V peak value to EN 50020 for Ex application)

General data

Safe electrical isolation to	System connection – field connection, module slot – module slot
EN 61010/EN 50020 (Ex)	
Isolation	System connection – field connection: 3.7 kV
	Module slot – module slot (field connection): 3.7 kV
	Per module slot (field connection), terminals 11, 14, 15 – 12, 13, 16: 1.35 kV
Max. ambient temperature	-20...+60 °C for horizontal mounting; -20...+55 °C for vertical mounting
Relative humidity	< 85 %, 3K3 to IEC 721, part 3-3, no condensation
Type of protect. to EN 60529/	IP 00 (the backplane must be so installed that at least IP 20 is guaranteed)
DIN VDE 0470 part 1	
Mounting type	Mounting in 19“-system
Mounting location	Outside hazardous area (attention to VDE 0165, IEC 79-14 in case Ex application)
Mounting orientation	horizontal or vertical
Weight	600 g

ABB Automation Products GmbH · Borsigstr. 2 · D-63755 Alzenau · Phone +49(0)60 23 - 92 0 · Fax +49(0)60 23 - 92 33 00 · http://www.abb.com/automation

Subject to technical changes.

Printed in the Fed. Rep. of Germany 12.00

System connection

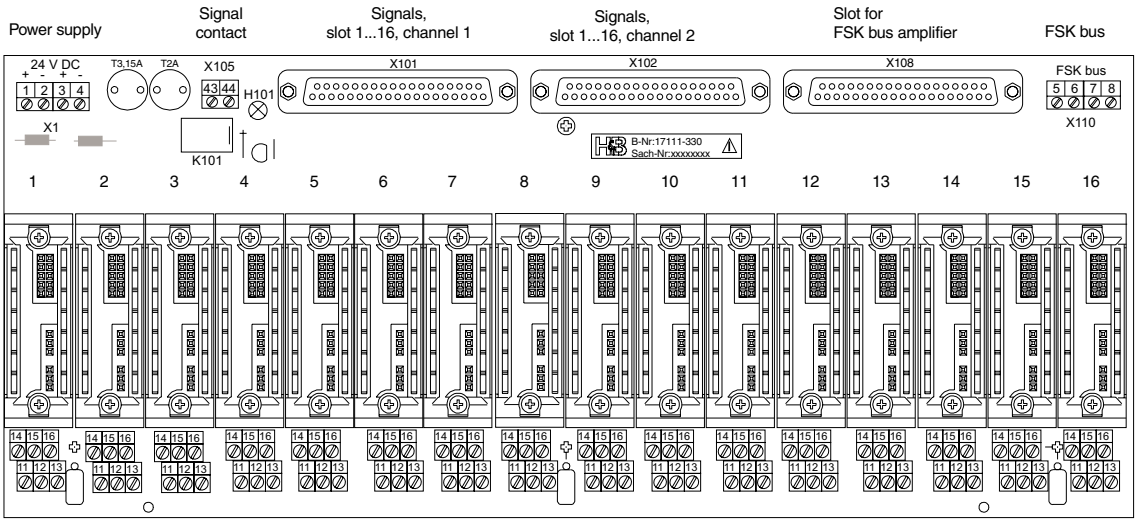

Signals, slot 1...21

Field connection

System connection

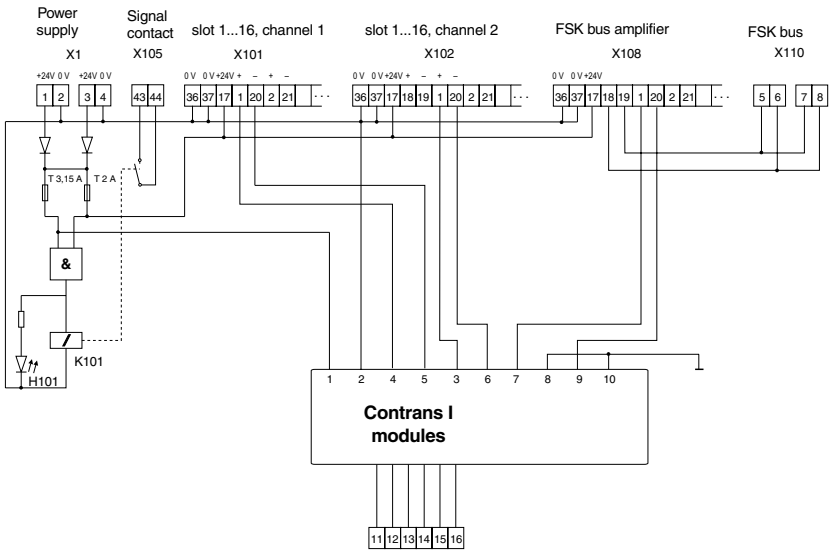

Field connection

X101
slot 1...16, channel 1

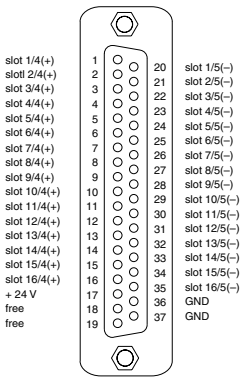

X102
slot 1...16, channel 2

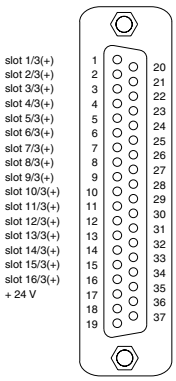

X108
slot
FSK bus amplifier

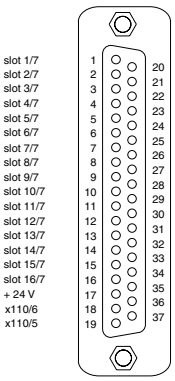

ABB Automation Products GmbH · Borsigstr. 2 · D-63755 Alzenau · Phone +49(0)60 23 - 92 0 · Fax +49(0)60 23 - 92 33 00 · http://www.abb.com/automation

Subject to technical changes.

Printed in the Fed. Rep. of Germany 12.00

Backplane V17111-6_ _

21way

- **For installing 21 Contrans I modules**
- **Signal processing up to 42 Ex or non Ex signals**
- **Redundant power supply with signal contact**
- **Separate fusing for modules and signal circuits**
- **Simple design of FSK bus trough pluggable bus amplifier**
- **Preference for 19“ racks**

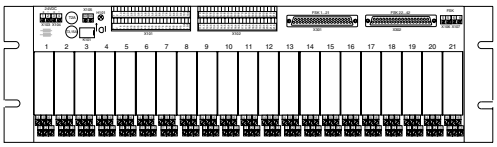

System connection

Signales	**X101/X102/X103/X104 (**slot 1...21, terminal 3, 4, 5, 6)
Socket/type	Pin terminal/SLD 3.5 V/44/90G 3.2 SNOR
Connector/type	Female multipoint connector/BL 3.5/2/SNOR (for max. 1.5 mm^2 wire cross section)
Rated voltage	≤ 30 V AC/DC (functional extra low voltage with safe electrical isolation
	to VDE 0100 part 410/IEC 364-4-41)
FSK bus	**X110** (terminal 5...8)
Socket/type	Screw terminals for max. 2.5 mm^2 wire cross section
FSK bus amplifier	X108/X109 (slot 1...21, terminal 7, 9)
Socket/type	37pin SUB-D
Connector/type	FSK bus amplifier V17191-21 (option)
Power supply	⊗ **X1** (terminal 1...4)
Socket/type	Screw terminal for max. 2.5 mm^2 wire cross section
Rated voltage	19.2...30 V DC (see rated voltage of the CI modules)
Voltage drop through	1.4 V
redundant supply diodes	
Wrong polarity protection	yes
Fusing power supply modules	T 3.15 A
Fusing power supply signals	T 2 A
Fuse monitoring	Failure of one or both fuses is signalled by the opening of the relay contact and the
	extinction of the LED
Signal contact	**X105 (**terminal 43, 44 – NO contact from relais)
Socket/type	Screw terminals for max. 2.5 mm^2 wire cross section
Switching capacity	≤ 10 W, 10 VA, cosφ ≥ 0.7
Switching current	≤ 0.5 A UC
Switching voltage	≤ 50 V UC

Field connection

Signales		Slot 1...21, terminals 11...16
	V17111-621	Screw terminals for max. 2.5 mm^2 wire cross section (colour grey)
Slot	V17111-622	Pluggable screw terminals for max. 2.5 mm^2 wire cross section (colour grey)
Connector	V17111-322	Type of connector MSTB 2.5/3-ST (for max. 2.5 mm^2 wire cross section)
	V17111-651	Screw terminals for max. 2.5 mm^2 wire cross section (colour blue)
Rated voltage		250 V AC (375 V peak value to EN 50020 for Ex application)

General data

Safe electrical isolation to	System connection – field connection, module slot – module slot
EN 61010/EN 50020 (Ex)	
Isolation	System connection – field connection: 3.7 kV
	Module slot – module slot (field connection): 3.7 kV
	Per module slot (field connection), terminals 11, 14, 15 – 12, 13, 16: 1.35 kV
Max. ambient temperature	-20...+60 °C for horizontal mounting; -20...+55 °C for vertical mounting
Relative humidity	< 85 %, 3K3 to IEC 721, part 3-3, no condensation
Type of protect. to EN 60529/	IP 00 (the backplane must be so installed that at least IP 20 is guaranteed)
DIN VDE 0470 part 1	
Mounting type	Mounting in 19“-system
Mounting location	Outside hazardous area (attention to VDE 0165, IEC 79-14 in case Ex application)
Mounting orientation	horizontal or vertical
Weight	1561 g

ABB Automation Products GmbH · Borsigstr. 2 · D-63755 Alzenau · Phone +49(0)60 23 - 92 0 · Fax +49(0)60 23 - 92 33 00 · http://www.abb.com/automation

Subject to technical changes.

Printed in the Fed. Rep. of Germany 12.00

System connection

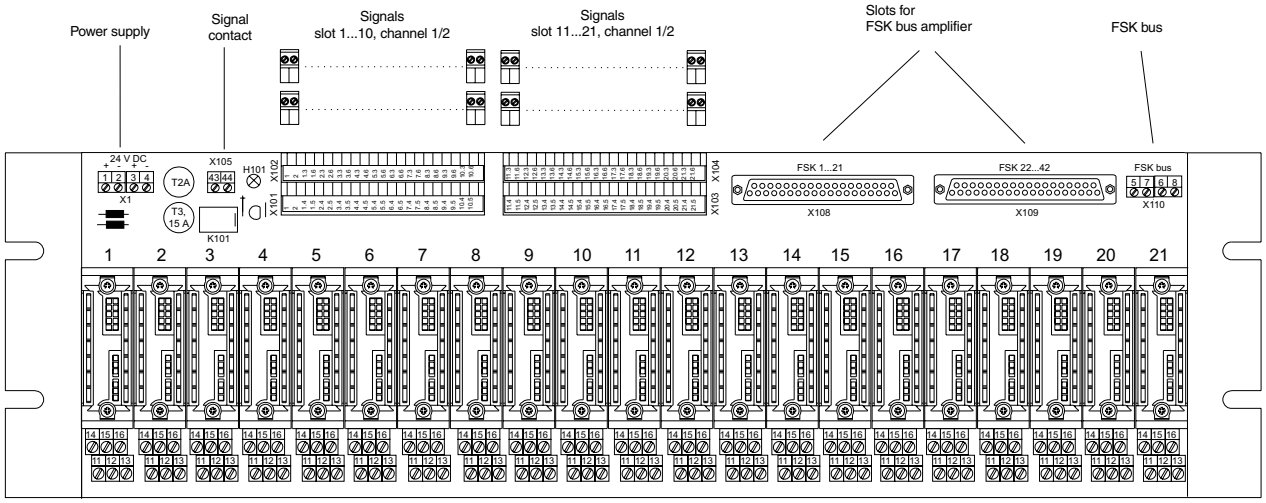

Field connection

System connection

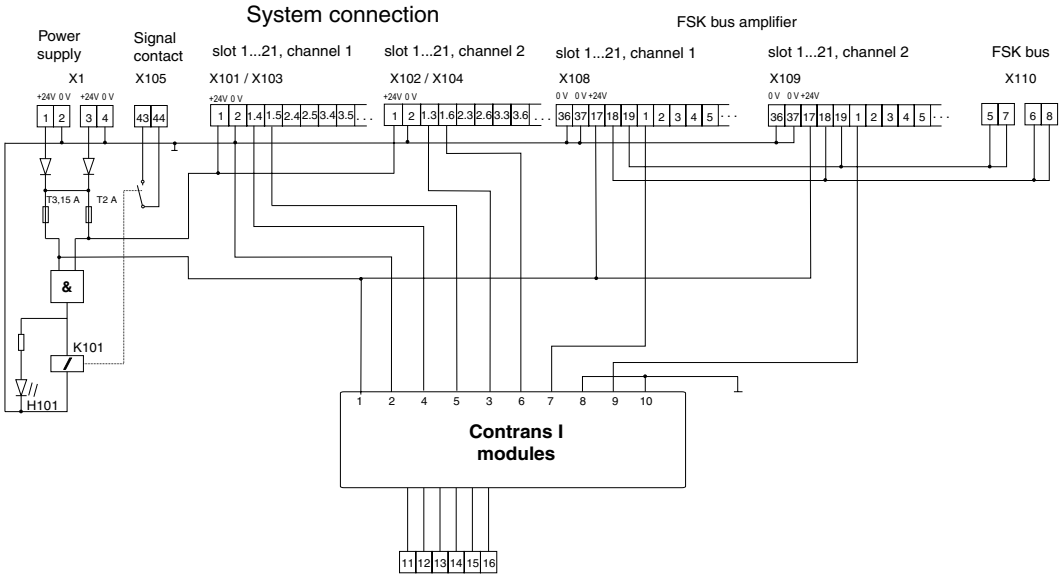

Field connection

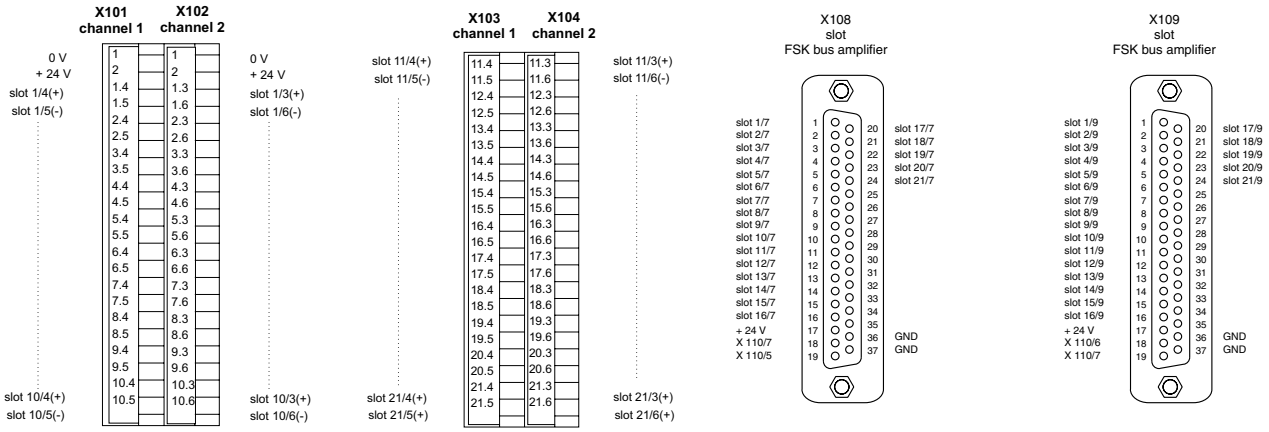

ABB Automation Products GmbH · Borsigstr. 2 · D-63755 Alzenau · Phone +49(0)60 23 - 92 0 · Fax +49(0)60 23 - 92 33 00 · http://www.abb.com/automation

Subject to technical changes.

Printed in the Fed. Rep. of Germany 12.00

Dimensional drawings

Socket V17111-11

Socket V17111-12
-13

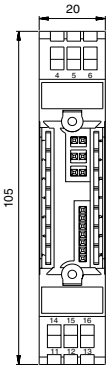

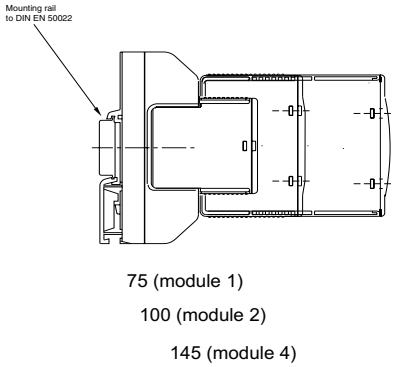

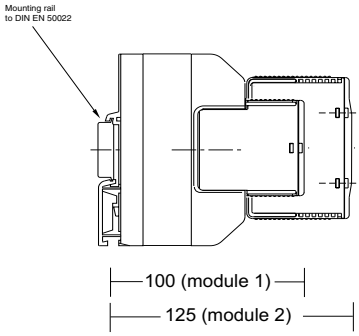

Backplane V17111-2 _ _

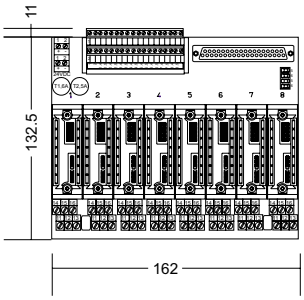

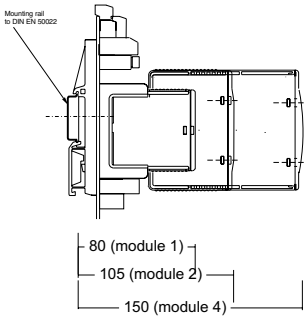

Backplane V17111-3 _ _

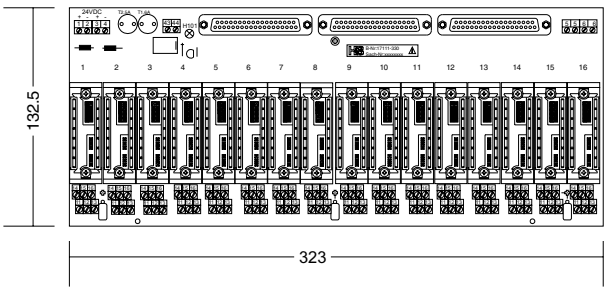

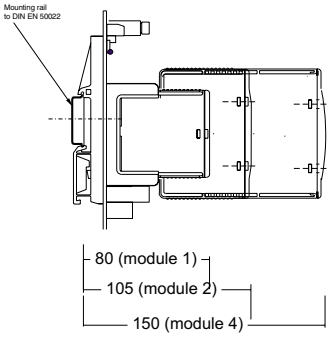

Backplane V17111-6 _ _

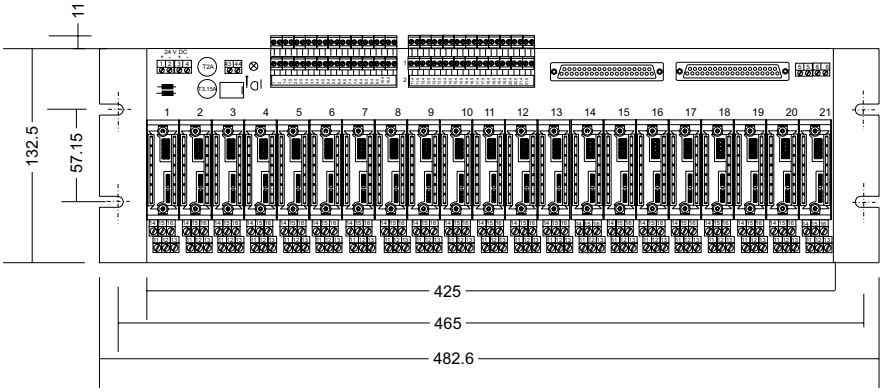

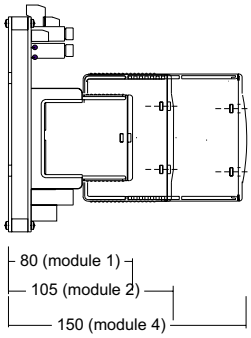

ABB Automation Products GmbH · Borsigstr. 2 · D-63755 Alzenau · Phone +49(0)60 23 - 92 0 · Fax +49(0)60 23 - 92 33 00 · http://www.abb.com/automation

Subject to technical changes.

Printed in the Fed. Rep. of Germany 12.00

Cross Wiring Module		V17191-11
Straight Through Module		V17191-12
FSK Bus Amplifier	16, 21, 32 channels	V17191-16, -21, -32
Programming Software	for Contrans I	7957781
System Cables	SUB D connector, single	0336935V
Power Supply		V17212-1_0

- **Connection multiplication**
- **Various types of cabling**
- **Routing of incoming and outgoing lines**
- **Separation between intrinsically safe and non-intrinsically safe circuits**

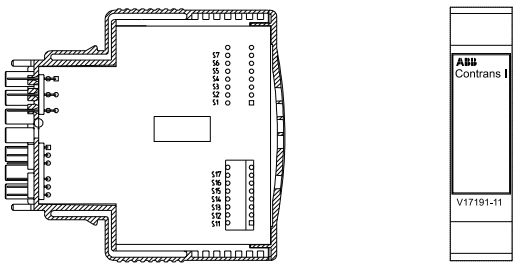

Module size 2

Input	
Connection	Terminals 12, 13, 14, 15, 16
	intrinsically safe and
	non-intrinsically safe circuits
Routing	DIP switches S11...S17
Output	
Connection	Terminals 1, 2, 3, 4, 5, 6
	non-intrinsically safe circuits
Routing	jumpers S1...S7

Module fits for:

Socket		Backplane	
V17111-11	●	V17111-2 _ _	●
V17111-12	●	V17111-3 _ _	●
V17111-13	●	V17111-6 _ _	●

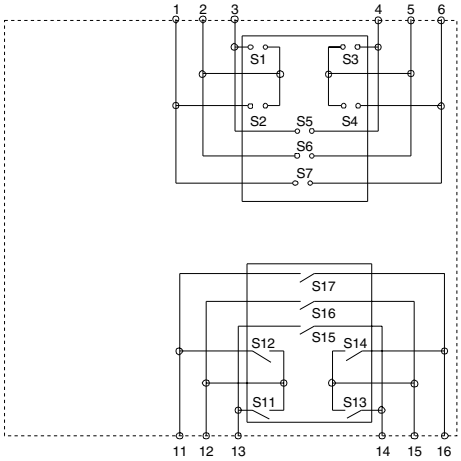

ABB Automation Products GmbH · Borsigstr. 2 · D-63755 Alzenau · Phone +49(0)60 23 - 92 0 · Fax +49(0)60 23 - 92 33 00 · http://www.abb.com/automation

Subject to technical changes.

Printed in the Fed. Rep. of Germany 12.00

- **Plug-in modules for testing (straight-through)**
- **User-specific application through universal circuit board**
- **Not suitable for intrinsically safe applications**

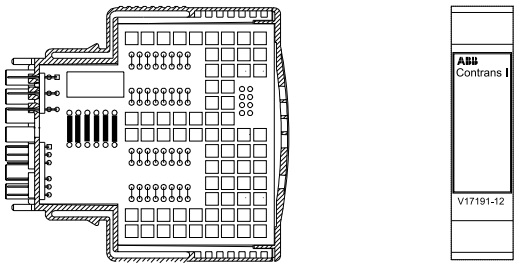

Module size 2

Input	
Connection	Terminals 12, 13, 14, 15, 16
Output	
Connection	Terminals 1, 2, 3, 4, 5, 6

Module fits for:

Socket		Backplane	
V17111-11	●	V17111-2 _ _	●
V17111-12	●	V17111-3 _ _	●
V17111-13	●	V17111-6 _ _	●

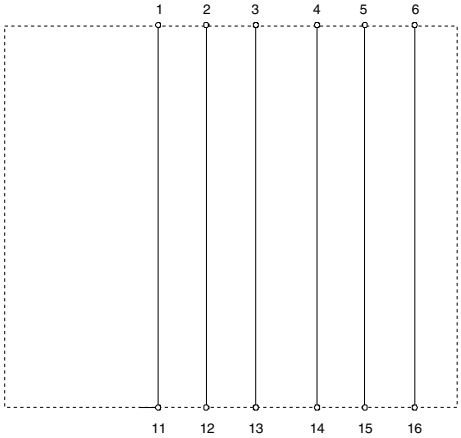

ABB Automation Products GmbH · Borsigstr. 2 · D-63755 Alzenau · Phone +49(0)60 23 - 92 0 · Fax +49(0)60 23 - 92 33 00 · http://www.abb.com/automation

Subject to technical changes.

Printed in the Fed. Rep. of Germany 12.00

ABB Automation Products GmbH · Borsigstr. 2 · D-63755 Alzenau · Phone +49(0)60 23 - 92 0 · Fax +49(0)60 23 - 92 33 00 · http://www.abb.com/automation

Subject to technical changes.

Printed in the Fed. Rep. of Germany 12.00

FSK Bus Amplifier

16, 21, 32 channels

V17191-16, -21, -32

- **FSK bus design Contrans I modules on standard backplane**
- **Bidirectional transmission of FSK signals according to HART protocol**
- **Cost-effective centralized operation**
- **Communication with intelligent field units via IBIS or SMART VISION**

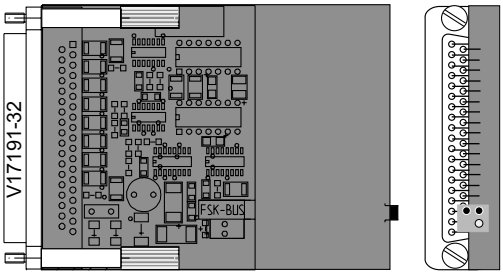

Output (FSK bus)	
Interconnection per FSK bus	max. 100 FSK bus amplifier
	(max. 50 FSK bus amplifier
	V17191-32)
Signal level	min. 140 mVss...2.0 Vss max.
Line length	max. 1000 m
Input	
Signal level	min. 140 mVss...2.0 Vss max.
Baudrate	1200 bit/s
Line length	max. 2 m
General data	
Transmission frequency	logical 1: 1200 Hz ± 1 %
	logical 0: 2200 Hz ± 1 %
Display	green LED, power supply „On“
Max. ambient temperature	-20...+60 °C
Weight	90 g
Power supply	
Connection	Terminals 1(+); 2(-)
Rated voltage	19.2...30 V DC
Power consumption	approx. 0.8 W

Notice:
The FSK bus is operated with the help of the IBIS or SMART VISION software. Field units which are to participated on the FSK bus are addressed via a bus code. During the first commissioning, it must be ensured that the bus code has been set to point operation. This means connecting the modem to the terminals of the respective Contrans I module. For the point to point operation mode, the connection to the FSK bus must be interrupted (pull out the FSK bus amplifier).

Accessories for the FSK bus communication:
– Personal computer with IBIS software of the connected field unit
– FSK modem with connecting cable, Catalog No. 11491-0343705

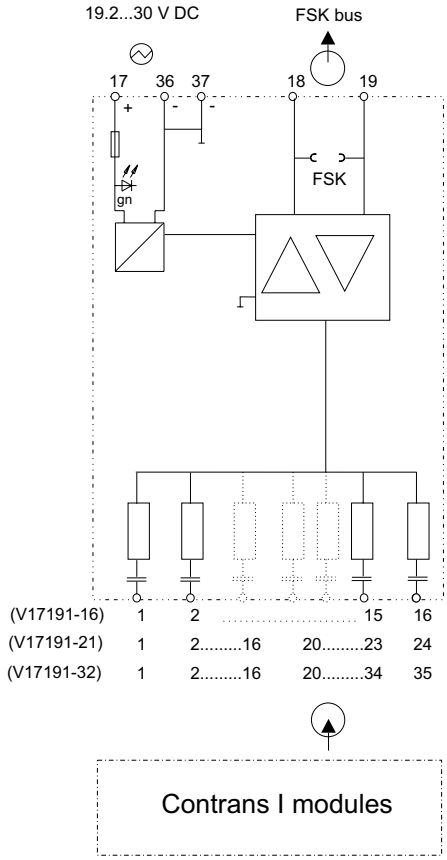

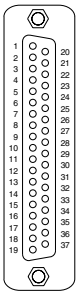

ABB Automation Products GmbH · Borsigstr. 2 · D-63755 Alzenau · Phone +49(0)60 23 - 92 0 · Fax +49(0)60 23 - 92 33 00 · http://www.abb.com/automation

Subject to technical changes.

Printed in the Fed. Rep. of Germany 12.00

Ordering information	Catalog No.
FSK bus amplifier	V17191-__
16 channels	16
21 channels	21
32 channels	32

ABB Automation Products GmbH · Borsigstr. 2 · D-63755 Alzenau · Phone +49(0)60 23 - 92 0 · Fax +49(0)60 23 - 92 33 00 · http://www.abb.com/automation

Subject to technical changes.

Printed in the Fed. Rep. of Germany 12.00

Programming Software

for Contrans I

7957781

- **Parameter setting and displaying measured values all parameters for the devices V17151-43_, V17152-31_, V17152-62_** [1)]
- **All informations on one screen view**
- **Online and offline parameterization via PC and LCI adapter**

[1)] For the definition of all parameters use SMART VISION

Menu-points

Headline: edit file, store file, load datas/save datas from the device, connection/disconnection to the device, output-simulation, select COM-port (option), select language (option)

Footline: displayed status informations, green LED (communication all right), date, time

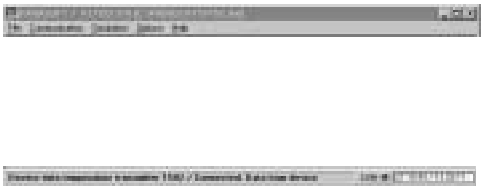

Device data

All informations which mark the device (device type, serial number, date of programming, Measurement tag), max. 32 characters)

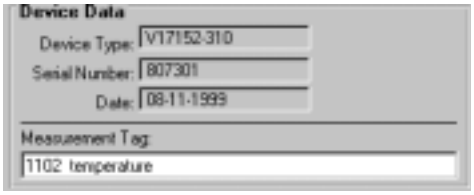

Measurement data input window

All datas which descripe the input values of the device: sensor type (Pt 100), Sensor connection (2-/3-/4-wire), reference junction for thermocouple (internal, external, without), measured mode (differential or average)

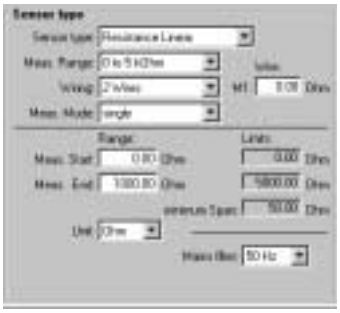

Measured Value/Status

Online informations: measured value, unit and percent of output-range status of the device

Measurement data output window

All datas which descripe the output values of the device: output range, output at failure (e.g. overranging 22 mA), output-behaviour at failure (e.g. wire-break), relays controlled values (alarm limits)

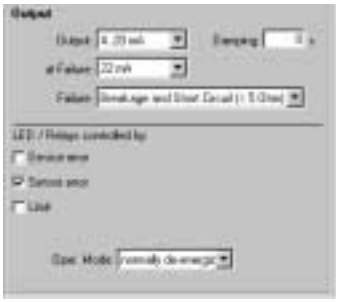

PC requirements (min.)

PC with Intel processor 80486, 66 MHz, 8 MB RAM, 8 MB hard drive capacity, operating system Windows 3.1x or higher

ABB Automation Products GmbH · Borsigstr. 2 · D-63755 Alzenau · Phone +49(0)60 23 - 92 0 · Fax +49(0)60 23 - 92 33 00 · http://www.abb.com/automation

Subject to technical changes.

Printed in the Fed. Rep. of Germany 12.00

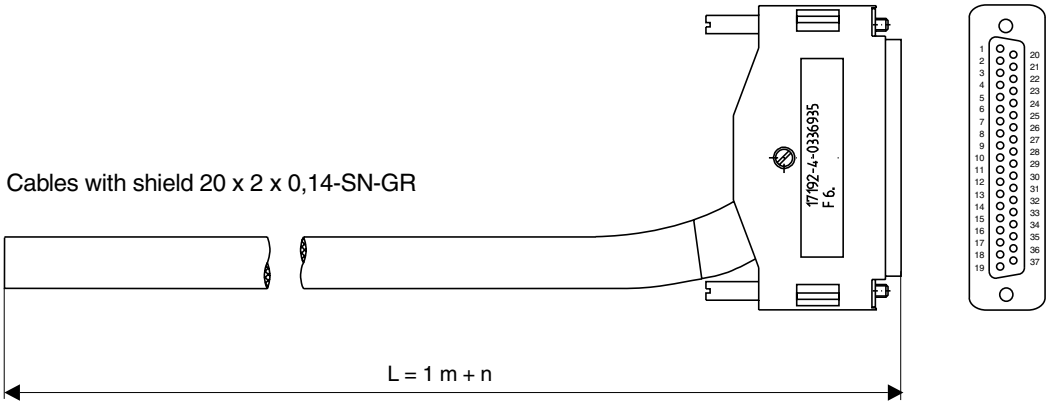

Pinout

Cables	ERNI plug	
green-black	17	24 V+
yellow-black	36	0 V
grey-blue	37	0 V
white	1	channel 1
brown	20	
green	2	channel 2
yellow	21	
grey	3	channel 3
pink	22	
blue	4	channel 4
red	23	
black	5	channel 5
violet	24	
grey-pink	6	channel 6
red-blue	25	
white-green	7	channel 7
brown-green	26	
white-yellow	8	channel 8
yellow-brown	27	

Don´t connect shield

Cables	ERNI plug	
white-grey	9	channel 9
grey-brown	28	
white-pink	10	channel 10
pink-brown	29	
white-blue	11	channel 11
brown-blue	30	
white-red	12	channel 12
brown-red	31	
white-black	13	channel 13
brown-black	32	
grey-green	14	channel 14
yellow-grey	33	
pink-green	15	channel 15
yellow-pink	34	
green-blue	16	channel 16
yellow-blue	35	
green-red	18	
yellow-red	19	
pink-blue	free	
grey-red	free	
pink-red	free	

ABB Automation Products GmbH · Borsigstr. 2 · D-63755 Alzenau · Phone +49(0)60 23 - 92 0 · Fax +49(0)60 23 - 92 33 00 · http://www.abb.com/automation

Subject to technical changes.

Printed in the Fed. Rep. of Germany 12.00

- **Power supply for Contrans I modules**
- **Termination at front**
- **Top-hat rail mounting**

Input		
Input voltage	115/230 V AC +15 %, -20 %	
	selectable	
Alternating voltage	47...63 Hz; 1.3/0.7 A	
Direct voltage	100...375 V DC at 50 % output current	
External circuit breaker	10 A (characteristic B proposed)	
Internal fuse	not reachable	
Output		
Rated voltage	24 V DC +5 %; -1 %	
		Buffer time
Type	output current	at 196 V AC
V17212-110	2.5 A	> 20 ms
V17212-120	5 A	> 37 ms
V17212-130	10 A	> 20 ms
Tolerance	better than 1 %	
Residual ripple	< 25 mV (peak-to-peak)	
General data		
LED display	Power “On“ (green)	
	LED switch off at < 12 V output voltage	
Electrical connections	Screw terminals at front, input at bottom,	
	output at top	
Type of protection	IP 20	
Distance between 2 supplies	approx. 25 mm	
Mounting type	at 35 mm DIN rail, acc. DIN EN 50 022	
Weight		
Type V17212-110	406 g	
Type V17212-120	620 g	
Type V17212-130	1050 g	
Performance under reference conditions		
Max. ambient temperature	-10...+60 °C	

Dimensional drawings (dimensions in mm)

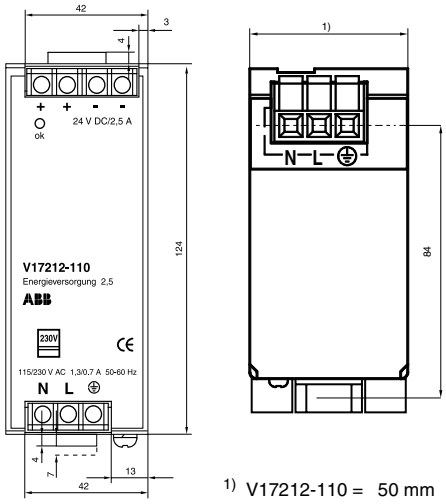

1) V17212-110 = 50 mm
-120 = 65 mm
-130 = 122 mm

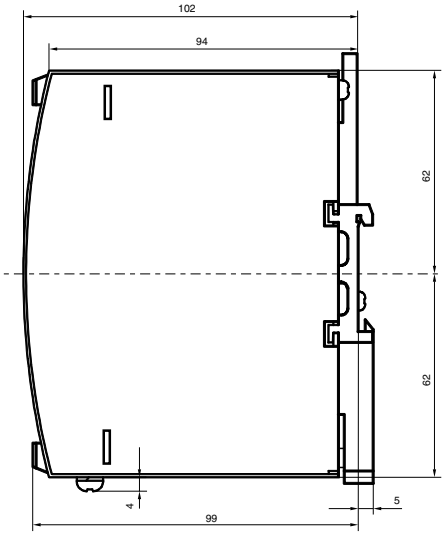

ABB Automation Products GmbH · Borsigstr. 2 · D-63755 Alzenau · Phone +49(0)60 23 - 92 0 · Fax +49(0)60 23 - 92 33 00 · http://www.abb.com/automation

Subject to technical changes.

Printed in the Fed. Rep. of Germany 12.00

Safety Instructions

Encoding

Safety Instructions

Correct and safe operation of Contrans I calls for appropriate transportation and storage, expert installation and commissioning as well as correct operation and meticulous maintenance.

Only those persons conversant with the installation, commissioning, operation and maintenance of similar apparatuses and who posses the necessary qualifications are allowed to work on Contrans I.

Contrans I has been designed and tested in conform with EN 61010-1 or DIN VDE 0411, Part 1 “Safety requirements for electrical process control units, instrumentation and laboratory devices“, overvoltage category II, pollution class 2 and has been supplied in a safe condition.

In order to retain this condition and to ensure safe operation, the following safety instructions must be observed. Otherwise, persons can be endangered and the Contrans I components themselves as well as other equipment and facilities can be demaged.

- Before plugging the module into the socket, care must be taken to ensure that the socket circuitry agrees with that of the connecting diagram. For voltages > 50 V AC or 120 V DC the terminals must be market with the rated voltage or the socket must be coded. The coding or marking must correspond th the “Mounting and Installation Instructions“.
- For voltages higher than 50 V AC/120 V DC, the insulation lengths of terminal wires must be between 5...6 mm. If more flexible lines are used, the end ferrules used should have these lengths.
- Before switching on devices of the protection class III, it must be ascertained that the power source has a functional extra-low voltage with an electrical isolation corresponding to the existing provisions.
- When opening covers or removing parts, except when this is manually possible, live parts may be exposed.
- The apparatus shall be disconnected from all voltage sources before it is opened for any operations. Operations on the opened apparatus under voltage must only be performed by an expert, who is aware of the hazard involved.
- Whenever it is likely that the protection has been impaired, the apparatus shall be made inoperative and be secured against any unintended operation.

Apart from the technical documentation in this catalog, the following must also be observed:

- The safety regulations pertaining to the installation and operation of electrical systems,
- the directives and guidelines on explosion protection.

If the information supplied in this catalog should prove to be insufficient, the ABB service department will be pleased to provide you with more information.

Encoding

Unintentional assignment of wrong functions can be prevented with coded modules

	Encoding pin													
	1	2	3	4	5	6	7	8	9	10	11	12	13	14
	Type group	Type group	Type group	Type group	Type group	> 50 V AC/120 V DC	Contrans I_remote	Type	Type	Type	Type	Type	Type	Ex
Binary modules: Switch amplifier														
V17131-13	●										●			
V17131-16	●							●						
V17131-51	●					❍							●	●
V17131-52	●					❍						●		●
V17131-53	●					❍					●			●
V17131-54	●									●				●
V17131-55	●								●					●
V17131-56	●							●						●
Binary modules: Solenoid drivers														
V17132-51		●											●	●
V17132-52		●										●		●
V17132-53		●									●			●
V17132-54		●								●				●
V17132-55		●							●					●
V17132-56		●						●						●
Binary modules: Coupling modules														
V17133-11			●										●	
V17133-21			●			❍			●					
V17133-510			●						●					●
Analog modules: Input isolators														
V17151-100				●								●	●	
V17151-11				●									●	
V17151-13				●								●		
V17151-210				●							●			
V17151-211				●							●		●	
V17151-212				●							●	●		
V17151-213				●						●	●			
V17151-220				●						●				
V17151-221				●						●			●	
V17151-222				●						●		●		
V17151-320				●					●					
V17151-325				●					●					
V17151-340				●					●					
V17151-350				●					●					
V17151-413				●								●		
V17151-420				●					●					
V17151-430				●		❍		●						
V17151-432				●		❍		●					●	
V17151-433				●		❍		●				●		
V17151-434				●		❍		●			●			
V17151-480				●		❍		●		●				
V17151-51				●									●	●
V17151-52				●								●		●
V17151-610				●							●			●
V17151-611				●							●		●	●
V17151-612				●							●	●		●
V17151-613				●						●	●			●
V17151-620				●						●				●
V17151-621				●						●			●	●

❍ = only when voltages > 50 V AC or 120 V DC are connected

Functional diagram for coding (suggestion)
Partial view of socket

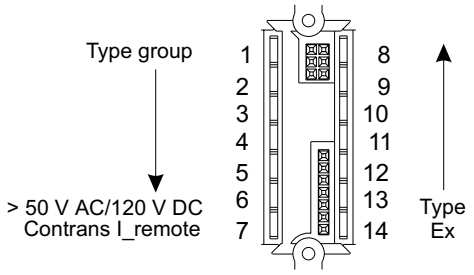

Example of coding (type V17131-1x)
Encoding star with 4 encoding pins
(part of supply for socket/backplane)

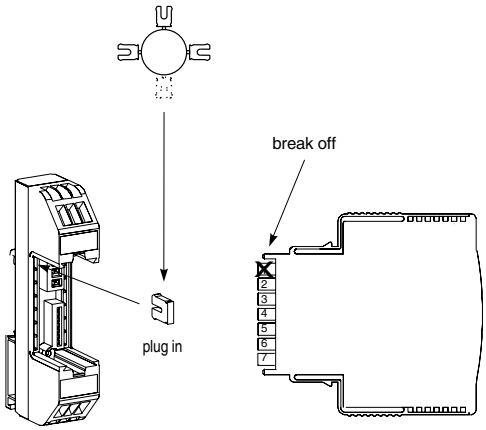

ABB Automation Products GmbH · Borsigstr. 2 · D-63755 Alzenau · Phone +49(0)60 23 - 92 0 · Fax +49(0)60 23 - 92 33 00 · http://www.abb.com/automation

Subject to technical changes.

Printed in the Fed. Rep. of Germany 12.00

Encoding

Unintentional assignment of wrong functions can be prevented with coded modules

	Encoding pin													
	1	2	3	4	5	6	7	8	9	10	11	12	13	14
	Type group	Type group	Type group	Type group	Type group	> 50 V AC/120 V DC	Contrans I_remote	Type	Type	Type	Type	Type	Type	Ex
Analog modules: Input isolators														
V17151-622				●						●		●		●
V17151-720				●					●					●
V17151-725				●					●					●
V17151-740				●					●					●
V17151-745				●					●					●
V17151-750				●					●					●
V17151-755				●					●					●
V17151-820				●					●					●
V17151-825				●					●					●
V17151-840				●					●					●
V17151-845				●					●					●
Analog modules: Transmitters														
V17152-310					●	❍							●	
V17152-311					●	❍						●		
V17152-312					●	❍					●			
V17152-313					●	❍				●				
V17152-314					●	❍			●					
V17152-611					●							●	●	●
V17152-612					●							●	●	●
V17152-613					●							●	●	●
V17152-614					●							●	●	●
V17152-619					●							●	●	●
V17152-620					●	❍							●	●
V17152-621					●	❍						●		●
V17152-622					●	❍					●			●
V17152-623					●	❍				●				●
V17152-624					●	❍			●					●
Analog modules: Output isolators														
V17153-11	●	●											●	
V17153-115	●	●										●	●	
V17153-13	●	●										●		
V17153-21	●	●									●			
V17153-22	●	●								●				
V17153-420	●	●							●					
V17153-51	●	●											●	●
V17153-515	●	●											●	●
V17153-52	●	●										●		●
V17153-61	●	●									●			●
V17153-62	●	●								●				●
V17153-820	●	●							●					●
V17153-825	●	●							●					●
V17153-840	●	●							●					●
V17153-845	●	●							●					●
Signalling and monitoring modules: Trip ampfifier														
V17171-11	●		●										●	
Accessories														
V17191-11	●			●									●	
V17191-12	●			●								●		

❍ = only when voltages > 50 V AC or 120 V DC are connected

Functional diagram for coding (suggestion)
Partial view of socket

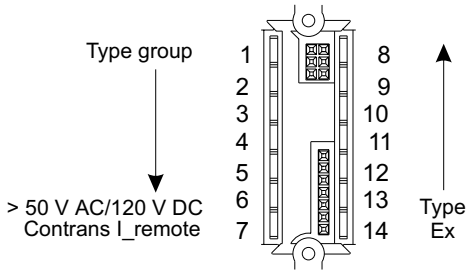

Example of coding (type V17131-1x)
Encoding star with 4 encoding pins
(part of supply for socket/backplane)

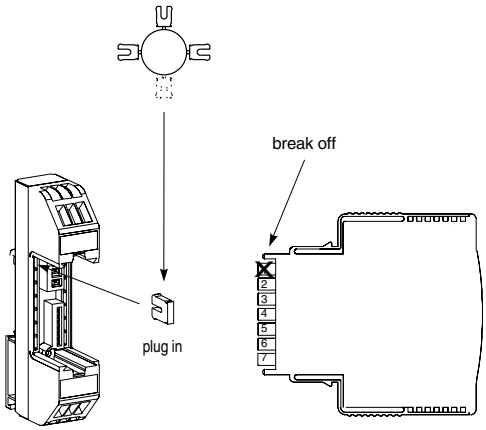

ABB Automation Products GmbH · Borsigstr. 2 · D-63755 Alzenau · Phone +49(0)60 23 - 92 0 · Fax +49(0)60 23 - 92 33 00 · http://www.abb.com/automation

Subject to technical changes.

Printed in the Fed. Rep. of Germany 12.00

ABB Automation Products GmbH
Borsigstr. 2, D-63755 Alzenau
Phone +49 (0) 6023 92 0, Fax +49 (0) 6023 92 3430
www.abb.com/automation

04/17.1 EN 11.00

Artisan Technology Group is an independent supplier of quality pre-owned equipment

Gold-standard solutions

Extend the life of your critical industrial, commercial, and military systems with our superior service and support.

We buy equipment

Planning to upgrade your current equipment? Have surplus equipment taking up shelf space? We'll give it a new home.

Learn more!

Visit us at **artisantg.com** for more info on price quotes, drivers, technical specifications, manuals, and documentation.

Artisan Scientific Corporation dba Artisan Technology Group is not an affiliate, representative, or authorized distributor for any manufacturer listed herein.

We're here to make your life easier. How can we help you today?

(217) 352-9330 | sales@artisantg.com | artisantg.com

ARTISAN® TECHNOLOGY GROUP