Allen-Bradley 2705-K11C1

RediPANEL Keypad Module

$1250.00

In Stock

Qty Available: 4

Used and in Excellent Condition

Open Web Page

https://www.artisantg.com/72623-1

ARTISAN TECHNOLOGY GROUP

Your **definitive** source for quality pre-owned equipment.

Artisan Technology Group

(217) 352-9330 | sales@artisantg.com | artisantg.com

All trademarks, brandnames, and brands appearing herein are the property of their respective owners.

- Critical and expedited services
- In stock / Ready-to-ship
- We buy your excess, underutilized, and idle equipment
- Full-service, independent repair center

Artisan Scientific Corporation dba Artisan Technology Group is not an affiliate, representative, or authorized distributor for any manufacturer listed herein.

Allen-Bradley

Bulletin 2705 RediPANEL Keypad Modules

(Cat. Nos. 2705-K11C1, -K11C2, -K12C2, -K12C3, -K12C4)

User Manual

Artisan Technology Group - Quality Instrumentation ... Guaranteed | (888) 88-SOURCE | www.artisantg.com

Important User Information

Solid state equipment has operational characteristics differing from those of electromechanical equipment. “Safety Guidelines for the Application, Installation and Maintenance of Solid State Controls” (Publication SGI-1.1) describes some important differences between solid state equipment and hard–wired electromechanical devices. Because of this difference, and also because of the wide variety of uses for solid state equipment, all persons responsible for applying this equipment must satisfy themselves that each intended application of this equipment is acceptable.

In no event will the Allen-Bradley Company be responsible or liable for indirect or consequential damages resulting from the use or application of this equipment.

The examples and diagrams in this manual are included solely for illustrative purposes. Because of the many variables and requirements associated with any particular installation, the Allen-Bradley Company cannot assume responsibility or liability for actual use based on the examples and diagrams.

No patent liability is assumed by Allen-Bradley Company with respect to use of information, circuits, equipment, or software described in this manual.

Reproduction of the contents of this manual, in whole or in part, without written permission of the Allen-Bradley Company is prohibited.

Throughout this manual we use notes to make you aware of safety considerations.

ATTENTION: Identifies information about practices or circumstances that can lead to personal injury or death, property damage, or economic loss.

Attentions help you:

- identify a hazard
- avoid the hazard
- recognize the consequences

Important: Identifies information that is especially important for successful application and understanding of the product.

PLC is a registered trademark of Allen-Bradley Company, Inc.
Pyramid Integrator, DTL and CVIM are trademarks of Allen-Bradley Company, Inc.
VAX is registered trademark of Digital Equipment Corporation.

Artisan Technology Group - Quality Instrumentation ... Guaranteed | (888) 88-SOURCE | www.artisantg.com

Using this Manual

Chapter 1

Chapter Objectives 1–1
What this Manual Contains 1–1
Audience 1–2
Reference Materials 1–2
Definition of Terms 1–2

Product Introduction

Chapter 2

Chapter Objectives 2–1
Features 2–1
Functions 2–1
Applications 2–2
Operator Data Input 2–3
Information Display 2–3
Remote I/O Communications 2–3

Installing the Bulletin 2705 Keypad Module

Chapter 3

Chapter Objectives 3–1
Electrical Precautions 3–1
Power Requirements 3–1
Grounding 3–2
NEMA Enclosures 3–2
Mechanical Installation 3–3
Connecting to a Remote I/O Link 3–5
Connecting to a Scanner Module 3–6

Chapter Objectives 11–12
SET AUTORUN? Entering the Special Functions Menu,
SET PORT? 1–12

Configuring the Bulletin 2705 Keypad Module with PLC's

Chapter 4

Chapter Objectives 4–1
Communications 4–1
Remote I/O Architecture 4–2
Compatible PLC's and Scanners 4–5
Calculating Rack Size 4–7
Remote I/O Configuration 4–8

Artisan Technology Group - Quality Instrumentation ... Guaranteed | (888) 88-SOURCE | www.artisantg.com

Selecting Options

Chapter 5

Chapter Objectives 5–1
DIP Switches 5–1
Typical Switch Settings 5–2
Setting Switch Bank #1 5–2
Setting Switch Bank #2 5–4
Setting Switch Bank #3 5–5

Operating Modes

Chapter 6

Chapter Objectives 6–1
Keypad Output Display 6–1
Numeric Data 6–2
ASCII Data 6–2
Display Stored Message 6–2
ASCII Message Display 6–2
Data Entry 6–3
Split Display 6–4
Decimal Modes 6–4
Polarity 6–4
Destination Entry 6–4
Messages 6–5
Keyboard 6–6
Entering Messages 6–7
Storing 6–7
Editing 6–7
Editing Commands 6–8

Programming

Chapter 7

Chapter Objectives 7–1
Introduction to Programming with the Keypad Module 7–1
PLC–5 Programming Examples 7–2
System Configuration 7–2
Input and Output Image Tables 7–3
Displaying Numeric Data 7–4
Triggering a Stored Message to Describe Data 7–5
Displaying a Full Line Stored Message 7–6
Entering or Changing Data with the Keypad Module 7–7
Using the Destination Function to Load Multiple Timer Presets 7–9
Using PLC–5's and a Sub I/O Scanner with Keypad Modules 7–11

Artisan Technology Group - Quality Instrumentation ... Guaranteed | (888) 88-SOURCE | www.artisantg.com

Instruction Parameters 7–12
Programming Example 7–13
Programming Example 7–15
PLC–2 Programming Example 7–16
PLC–2 Example Program 7–17
Program Set–up 7–19
Part A: Changing and Examining Accumulated Value of Counter for PLC–2 7–21
Part B: Changing and Examining Preset Value of Counter for PLC–2 7–22
Part C: Displaying a 16–Character Message for PLC–2 7–23
Part D: Displaying Message and Variable Data Simultaneously for PLC–2 7–24
Part E: Using Destination Bits to Retrieve or Change Data for PLC–2 7–24
Symbols and Abbreviations for I/O Image Tables 7–25
Decimal Point Control 7–26
When to Use the Handshake Mode 7–28
Input and Output Image Tables 7–30
Integer Data – With Stored Message 7–30
BCD Data – With Stored Message 7–31
Binary Data – With Stored Message 7–32
Integer Data – No Stored Message 7–33
BCD Data – No Stored Message 7–35
Binary Data – No Stored Message 7–37

Maintenance and Troubleshooting

Chapter 8

Chapter Objectives 8–1
Using the Comm/Fault LED Indicators 8–1
Power–up Sequence Error Message Display 8–2
Basic Troubleshooting Questions 8–3

Specifications

Chapter 9

Chapter Objectives 9–1
Specifications 9–1

Appendix

A

Error Messages A–1
Display Characters A–3

Index I–1

Artisan Technology Group - Quality Instrumentation ... Guaranteed | (888) 88-SOURCE | www.artisantg.com

Chapter 1

Using this Manual

Chapter Objectives

This chapter describes the manual's organization, intended audience, and special terminology.

What this Manual Contains

This manual describes the equipment, communication protocol, command structure, installation, operation, troubleshooting, and specifications for the Allen–Bradley Bulletin 2705 RediPANEL™ Keypad Modules (Catalog Numbers: 2705–K11C1, –K11C2, –K12C2, –K12C3, –K12C4).

You will want to study this manual before installing, interconnecting, or operating the Keypad Module.

Table 1.A shows the manual's organization.

Chapter	Title	Purpose
1	Using this Manual	Gives guidance on how to use this manual properly.
2	Product Introduction	Describes Keypad features and functions.
3	Installing the Keypad Module	Describes electrical, power and grounding requirements, gives procedures for connecting to remote I/O links and scanners.
4	Configuring the Keypad Module with PLC's	Provides communication and configuration parameters as well as application considerations.
5	Selecting Options	Describes DIP switch settings.
6	Operating Modes	Explains data input and display modes, and message entering, editing and storing.
7	Programming	Describes programming, explains sample program, and lists input/output image tables.
8	Maintenance and Troubleshooting	Covers basic troubleshooting questions, LED displays, and power–up sequence.
9	Specifications	Lists the design and operating specifications for the Module.

Artisan Technology Group - Quality Instrumentation ... Guaranteed | (888) 88-SOURCE | www.artisantg.com

Audience

To get maximum benefit from this manual and the best use of the Bulletin 2705 Keypad Module in your system, you must be able to operate and program an Allen–Bradley Programmable Logic Controller (PLC) or Small Logic Controller (SLC).

Reference Materials

We make reference in this manual to several other publications. They are:

- Allen–Bradley Publication 1770–4.1 (for grounding and wiring guidelines).
- *National Electrical Code* published by the National Fire Protection Association of Boston, Massachusetts (wire sizes and types for grounding electrical equipment)
- Programmable Controller and scanner module literature. Refer to page 4–6 for publication numbers.
- Bulletin 2705 Keypad Programming Software User's Manual

Definition of Major Terms

We use the following terms and acronyms in this manual:

Keypad Module	-Allen–Bradley Bulletin 2705 RediPANEL Keypad Modules (Catalog Numbers: 2705–K11C1, –K11C2, –K12C2, –K12C3, –K12C4)
PLC	Programmable Logic Controller
SLC	Small Logic Controller

Artisan Technology Group - Quality Instrumentation ... Guaranteed | (888) 88-SOURCE | www.artisantg.com

Chapter 2

Product Introduction

Chapter Objectives

This chapter describes the features, functions and operation of the Bulletin 2705 RediPANEL Keypad Module.

Features

The Bulletin 2705 RediPANEL Keypad Module is an operator module that connects directly to an Allen–Bradley PLC via the remote I/O link. It provides the capability for operators to input data to and retrieve data from the PLC. It also functions as a single line message display. The Keypad Module supports the following features:

- Sixteen character alphanumeric display
- Numeric keypad with keys for DELETE, ENTER, Decimal and Polarity
- Six programmable function keys with six programmable LED indicators
- Remote I/O networking. Up to 16 modules can be located along a single cable up to 10,000 feet away from the PLC
- On–board message storage and message editor
- NEMA Type 4X rating when panel mounted (indoor use only)
- Security keyswitch
- Security keyswitch option
- Complete diagnostics
- Binary, BCD and integer data types
- Power Source 90–265 Volts AC or 18–30 Volts DC
- Power Source 120/240 Volts AC or 18–30 Volts DC
- UL listed Class I; Division 2 versions available
- Additional data access with Destination Function
- IBM based Keypad Programming Software

Functions

- Replaces multiple thumbwheels
- Acts like a remote I/O rack:
  - Accepts operator input of numeric data and sends it to the Programmable Logic Controller (PLC)
  - Retrieves data from the PLC
- Displays numeric data with related text
- Allows operators to display messages that can:
  - prompt operators
  - display alarm messages
  - display machine or process status
- Provides alarm annunciator with acknowledgment capabilities

Artisan Technology Group - Quality Instrumentation ... Guaranteed | (888) 88-SOURCE | www.artisantg.com

Applications

The Keypad Module combines the functions of standard thumbwheel or push button devices with the built–in capabilities of a remote I/O rack.

The Keypad Module communicates directly with the programmable controller via the Remote I/O link. You can install a 2705 module anywhere along that link.

To the PLC, the Keypad Module looks like a hardwired remote I/O rack. The function keys and the LED output signals are programmed as discrete I/O in the PLC. Communication occurs through I/O image table updates.

Figure 2.1 shows a typical application.

Figure 2.1
Typical RediPANEL Keypad Application

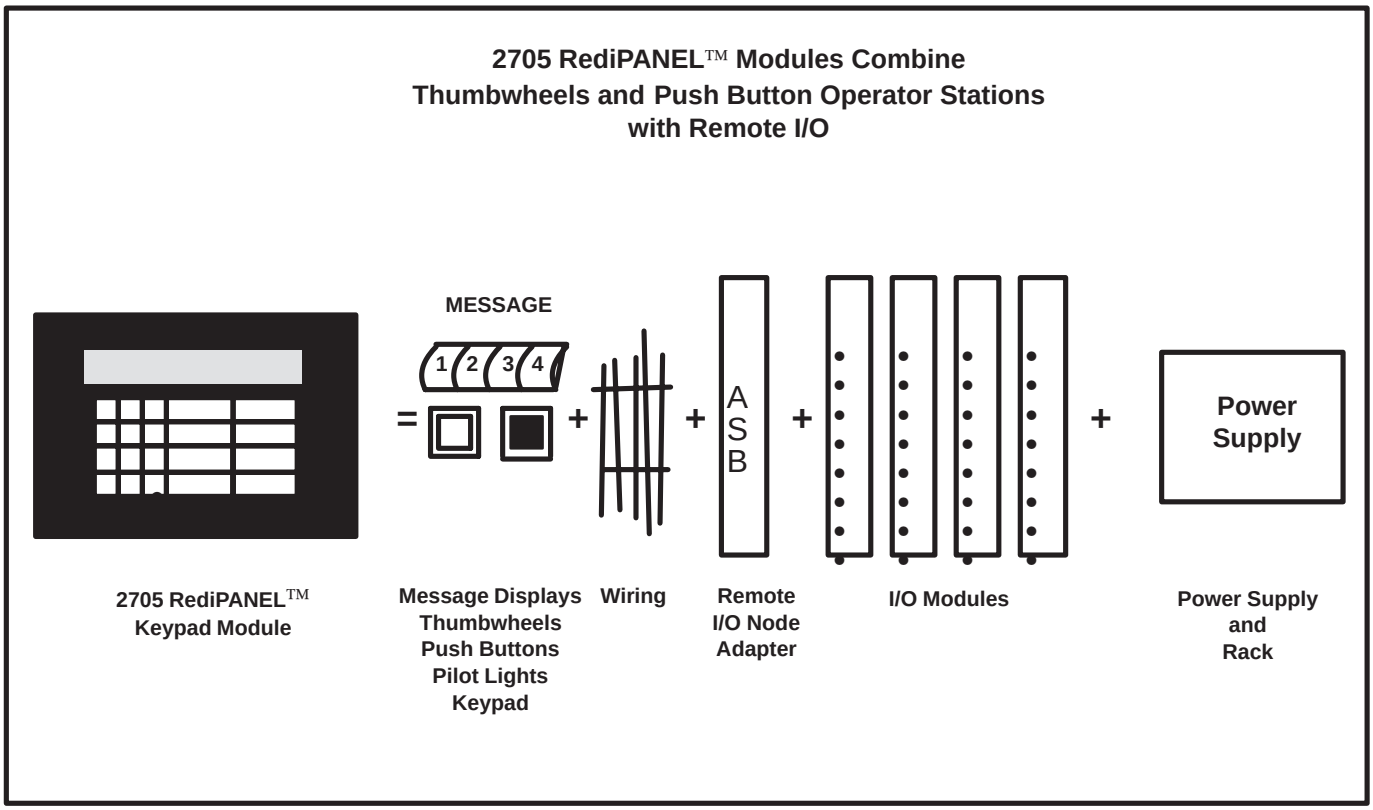

Artisan Technology Group - Quality Instrumentation ... Guaranteed | (888) 88-SOURCE | www.artisantg.com

Operator Data Input

The 2705 RediPANEL Keypad Module features a numeric keypad with DELETE, ENTER, decimal and polarity keys. Using the keypad, operators can enter up to eight (8) digits (seven digits for signed numbers), which appear on the right side of the 16 character display. If an attempt is made to enter more than eight digits, only the first eight are accepted.

If mistakes are made while entering data, the display can be cleared one character at a time by depressing the DELETE key. The data is not transmitted to the PLC until the ENTER key is depressed. The DECIMAL POINT key allows operators to enter decimal numbers.

Six user–definable function keys are also provided. These keys can be used for:

- Any momentary push button function.
- Acknowledging alarm messages.

Each function key features an independent LED.

A terminal block is provided for hardwiring a security keyswitch. When the Normally Open contact is closed, it locks out the functionality of the numeric keypad, but allows the use of the function keys 1 through 6 and destination value functions.

Information Display

The RediPANEL Keypad Module features a sixteen character, alphanumeric, vacuum fluorescent display. It can display input information from the keypad, ASCII and numeric data from the PLC, and messages that are stored in the module.

The module can display any one of the following combinations of information at any one time:

1) All ASCII data. This can consist of either:

   a) A single–line, 16 character message stored inside the module. Up to 120 single line messages can be stored in the EEPROM inside the module. To create and edit messages, the modules feature a built–in message editor. The editor is accessed by plugging an IBM–XT/AT keyboard (or compatible) into the receptacle located on the back of the module.

   b) Up to 12 ASCII characters from the PLC.

In this manner, the Keypad Module can display text to inform and prompt operators. It can also be used to display alarm messages that are stored on the keypad's EEPROM inside the module.

Artisan Technology Group - Quality Instrumentation ... Guaranteed | (888) 88-SOURCE | www.artisantg.com

2) A combination of ASCII and numeric data. Up to 8 characters of ASCII data are displayed on the left side of the display and 8 digits of numeric data are displayed on the right side of the display. This allows you to label numeric data with text.

The ASCII data can consist of either the first 8 characters of a stored message or 8 characters sent from the PLC controller. The 8 digits of numeric data can represent either operator input from the keypad or 8 characters from the PLC controller.

The module can support three data type formats for numeric data: binary, BCD, and integer. The data type is selected via a DIP switch on the module. Binary and BCD modes apply to the PLC–2 family of processors. Data type formats for the PLC–3 and PLC–5 controllers can be either binary, BCD or integer. These data type selections apply only to numeric values that are displayed.

Remote I/O Communications

2705 RediPANEL Modules combine the functions of standard panel devices with the capabilities of a Remote I/O Rack - all in one package.

2705 RediPANEL Modules connect to remote I/O scanners and sub–scanners just like remote I/O racks. This replaces large wire bundles with a single twin–axial cable that connects the module to the programmable controller. Up to 16 separate modules can be located on a single cable up to 10,000 feet away from the PLC.

The modules are addressed through DIP switch settings, in the same manner as remote I/O racks. Additional DIP switches allow you to select the following features:

- Handshake - Holds an input signal ON until the programmable controller recognizes it.
- Keyswitch - Enables the terminal block for the security lockout keyswitch.
- Data Format - Two DIP switches are used to select either binary, BCD or integer data types.
- Stored Message Display - When enabled determines whether to display ASCII messages from the PLC or messages stored in the module's EEPROM.
- Split Display - Enables the split display feature.

Artisan Technology Group - Quality Instrumentation ... Guaranteed | (888) 88-SOURCE | www.artisantg.com

Chapter 3

Installing the Bulletin 2705 Keypad Module

Chapter Objectives

This chapter lists electrical precautions and power and grounding requirements for installing the Bulletin 2705 RediPANEL Keypad Module. Topics also include selecting NEMA enclosures, the mechanical installation of the module, and connecting to remote I/O links and to scanner modules.

Electrical Precautions

Install the Bulletin 2705 Keypad Module using publication NFPA 70E,Electrical Safety Requirements for Employee Workplaces. In addition to the NFPA general guidelines, we have added some specific guidelines.

ATTENTION:
Do not program any of the function keys on the Keypad Module as emergency stop switches. Emergency stop switches must be hard–wired to the master control relay of the system in order to turn off all machine power completely.

Careful routing helps cut down on electrical noise. Route incoming power to the module by a separate path from the communication cables.

Do not run communications wiring and power wiring in the same conduit!

Where wire paths must cross, make their intersection perpendicular.

With solid state systems, grounding helps to limit the effects of noise due to electromagnetic interference (EMI). To avoid problems caused by EMI, use shielded cables.

Power Requirements

Before connecting the Keypad Module to the incoming power, verify that the power source and module type (AC or DC) are in agreement.

The Keypad Module will operate from these sources:

- 90–265 Volts AC, switch selectable, 47–63Hz
- 18–30 Volts DC

Artisan Technology Group - Quality Instrumentation ... Guaranteed | (888) 88-SOURCE | www.artisantg.com

Grounding

Grounding is an important safety measure in electrical installations. With solid state systems, as we mentioned before, grounding also helps to limit the effect of noise due to EMI (electromagnetic interference).

An authoritative source on grounding requirements is the *National Electrical Code* published by the National Fire Protection Association of Boston, Massachusetts. An article of the *Code* discusses the types and sizes of wire conductors and safe methods of grounding electrical equipment and components.

NEMA Enclosures

You must use a NEMA enclosure to protect the electronics of the Keypad Module from atmospheric contamination. Standards established by the National Electrical Manufacturer's Association (NEMA) define enclosure types based on the degree of protection an enclosure will provide.

Select an enclosure that meets the requirements of NEMA Type 4.

Within the NEMA enclosure, the Keypad Module (or modules) needs enough room to allow for convection cooling. If the ambient temperature around the enclosure is below +40°C, you may use an unvented enclosure.

To mount several modules in the same enclosure, follow these guidelines (see Figure 3.1 on the following page):

- **Vertical stacking of modules:** The lower edge of the top cutout must be at least 6 inches (15cm) from the top edge of the lower cutout. The enclosure must be at least 8 inches (20cm) deep.
- **Horizontal mounting:** You can mount modules as close together as physically possible. The enclosure must be at least 8 inches (20cm) deep.

In some applications, you may also have to deal with heat produced by other equipment inside (or outside) the enclosure. In such a case, you may place blower fans inside the enclosure to assist in circulating air to reduce hot spots near the components.

Do not bring in unfiltered outside air - it could contain contaminants or dirt harmful to the components.

In extreme cases, you may have to use air conditioning to protect against heat buildup within the enclosure.

Artisan Technology Group - Quality Instrumentation ... Guaranteed | (888) 88-SOURCE | www.artisantg.com

Figure 3.1 shows recommended spacing for modules inside the NEMA enclosure.

Figure 3.1
Spacing for Modules inside the NEMA Enclosure

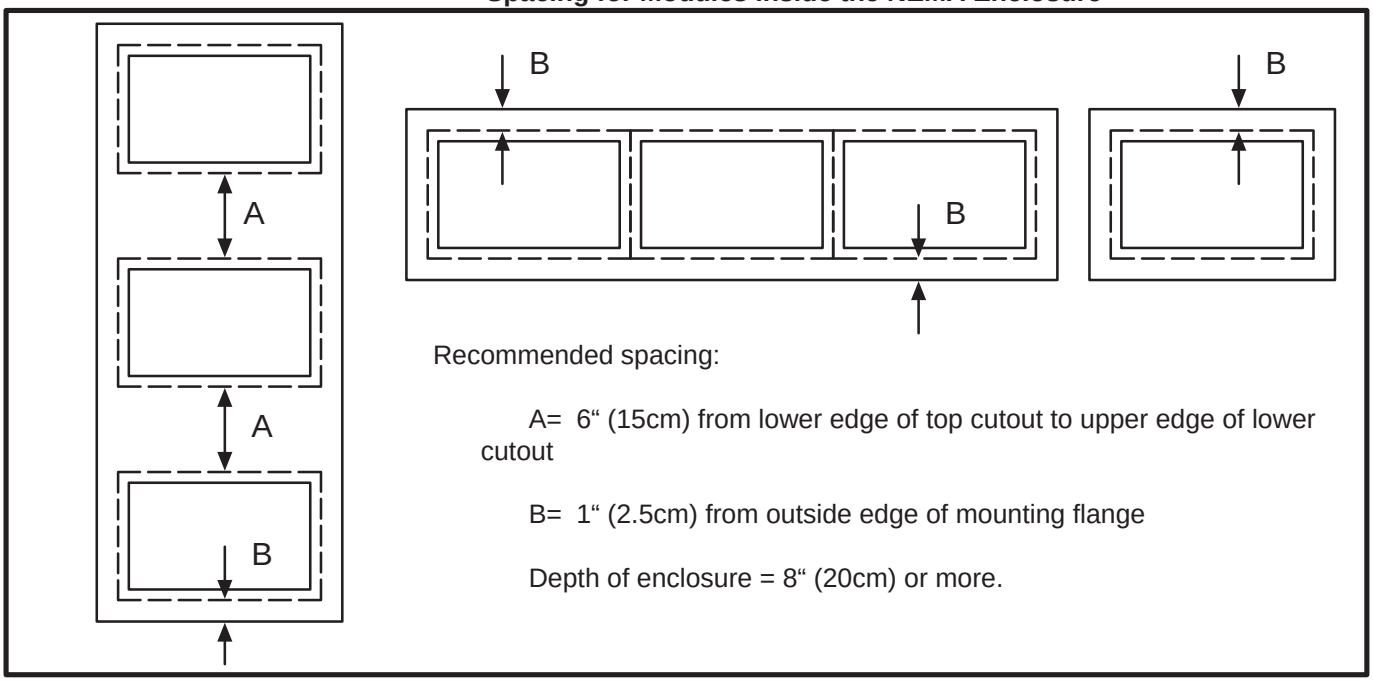

Mechanical Installation

Mounting tabs are built into the module. After you slide the module into the enclosure, the tabs secure the module to the enclosure. See Figure 3.2. The installation procedure is listed on the following page.

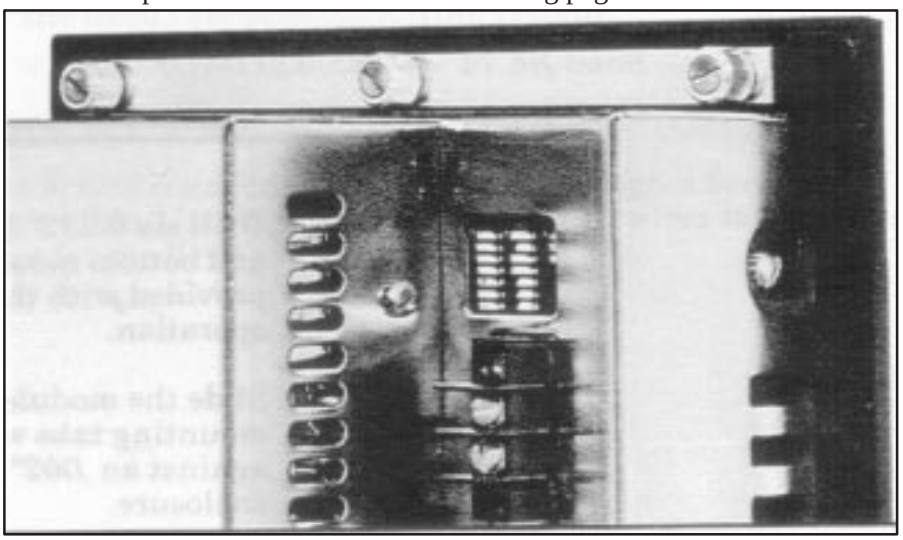

Artisan Technology Group - Quality Instrumentation ... Guaranteed | (888) 88-SOURCE | www.artisantg.com

To install the module, follow these guidelines:

Step 1 - Cut an opening in the panel approximately 5.86” (149mm) H x 8.61” (219mm) W. See Figure 3.3.

Figure 3.3
Mounting Dimensions of the Module

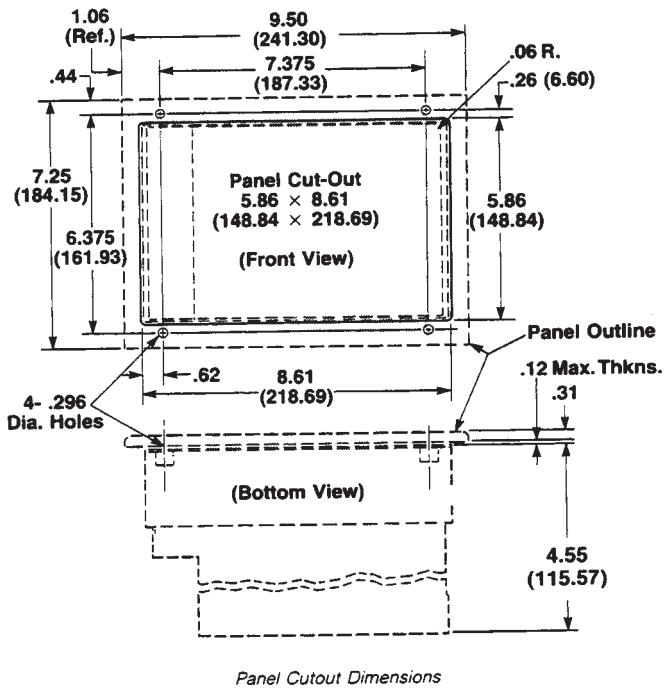

Step 2 - Drill six 0.312” (7.6mm) diameter holes for the top and bottom mounting brackets. A template is provided with the module to assist in this operation.

Step 3 - Slide the module through the opening. The mounting tabs will help seat the module tightly against an .062” (1.6mm) to .125” (3.2mm) thick enclosure.

Artisan Technology Group - Quality Instrumentation ... Guaranteed | (888) 88-SOURCE | www.artisantg.com

Step 4 - To complete the mechanical installation, apply the mounting brackets and tighten all the captive knurled thumbscrews to 5 in–lbs. only. A torque screwdriver is recommended for this operation. Figure 3.4 shows the location of these screws.

Figure 3.4
Mounting Bracket Thumbscrews

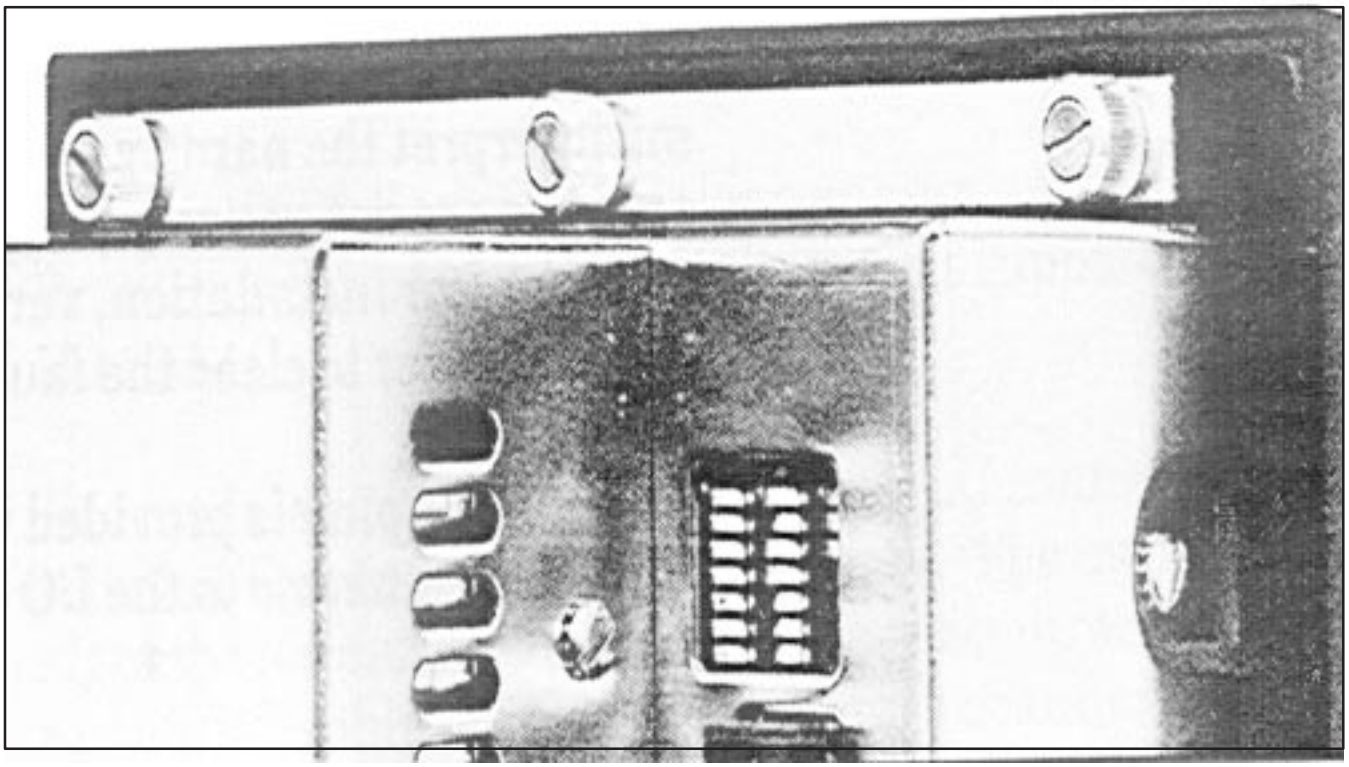

Connecting to a Remote I/O Link

The remote I/O link begins at the scanner module. The scanner modules and PLC controllers impose physical and logical limitations on the link. You have to know these limitations to avoid exceeding them.

- To the rest of the system, the Keypad Module looks like a remote I/O rack, and is addressed as such.
- You may distribute up to 16 remote I/O devices along the link.
- The maximum cable length (link distance) is limited by the baud rate selected for the system:
  - 10,000 feet (2,800m) for 57.5K baud
  - 5,000 feet (1,400m) for 115.2K baud
  - 2,500 feet (700m) for 230.4K baud

The actual connection to the link is through a Serial Data Link cable (Catalog No. 1770–CD) which wires to a connector plug for the Keypad Module.

Artisan Technology Group - Quality Instrumentation ... Guaranteed | (888) 88-SOURCE | www.artisantg.com

Connecting a Scanner Module

Connect the Keypad Module to the scanner module with Allen–Bradley I/O cable (Catalog No. 1770–CD) or Belden #9463.

Refer to Publication 1770–4.1 for detailed grounding and wiring guidelines. The user's manual or product data sheet for your scanner module will also provide cabling information.

Important: When first installed, the Keypad Module may misinterpret the hardware configuration if the DIP switch settings are not entirely correct. If the FAULT indicator flashes after installation, verify the DIP switch settings and recycle power to clear the fault.

A connector plug is provided with each Keypad Module. Wire the connector to the I/O cable according to Figure 3.5 below.

Figure 3.5
Wiring Connections for the Communications Cable

The Belden twin–axial cable is the link that ties the Bulletin 2705 RediPANEL Modules to the Remote I/O communications. It is to be wired from the mating connector of the user's scanner module to the mating connector of the 2705 modules.

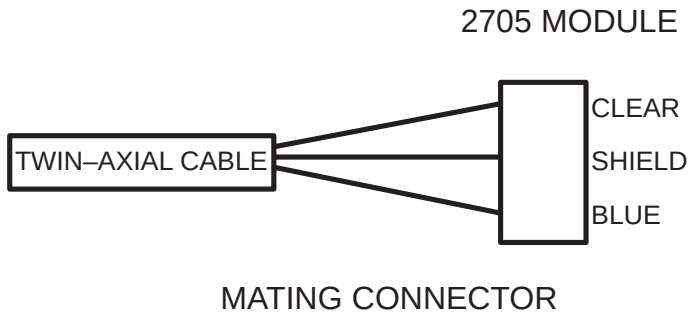

Artisan Technology Group - Quality Instrumentation ... Guaranteed | (888) 88-SOURCE | www.artisantg.com

Chapter 4

Configuring the Bulletin 2705 Keypad Module with PLC Controllers

Chapter Objectives

This chapter lists compatibility considerations for operating the Bulletin 2705 RediPANEL Keypad Module with programmable controllers via the remote I/O link. Topics also include the remote I/O architecture and factors in calculating rack size.

Communications

Bulletin 2705 Keypad Modules communicate with all Allen–Bradley programmable controllers that support the remote I/O link.

The modules communicate with the PLC controllers through remote I/O scanners and sub–scanners. The modules contain all of the necessary electronics to connect directly to the remote I/O cable that originates from a scanner or sub–scanner module. The scanners have both physical and logical limitations. The physical limitations refer to the number of separate chassis (I/O racks, drive systems, or RediPANEL Modules) the scanner can accommodate. The logical limitations refer to the amount of I/O the scanner can address.

To configure RediPANEL Modules with PLC controllers you need to know:

1. The appropriate scanner module for the PLC controller. This can be found in the next section titled Remote I/O Architecture.
2. The amount of I/O the RediPANEL Module utilizes. This is found in the section titled Calculating Rack Size on Page 4–7.
3. The number of chassis and amount of I/O that the scanner can accommodate. This is found in the section titled Remote I/O Configuration on Page 4–8.

Artisan Technology Group - Quality Instrumentation ... Guaranteed | (888) 88-SOURCE | www.artisantg.com

Remote I/O Architecture

The following diagrams show applications using the Bulletin 2705 Keypad Module in systems using applicable PLC's and scanners.

Figure 4.1
Keypad Module with Mini–PLC (PLC–2/05, PLC–2/15, PLC–2/16, PLC–2/17)

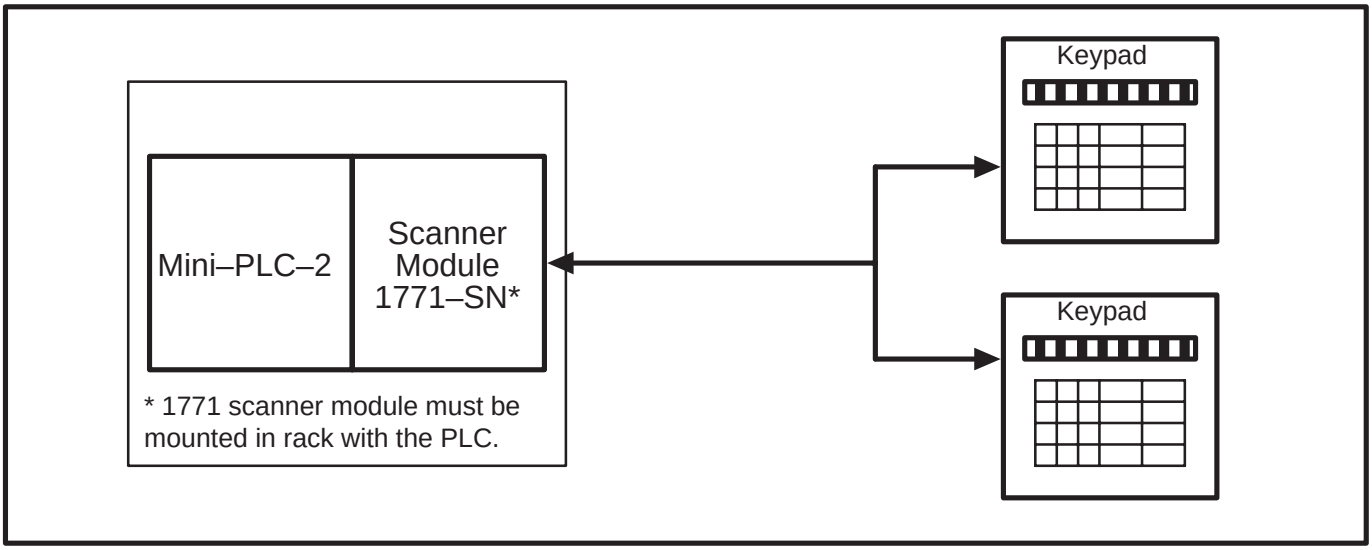

Figure 4.2
Keypad Module with PLC–2/20 or PLC 2/30

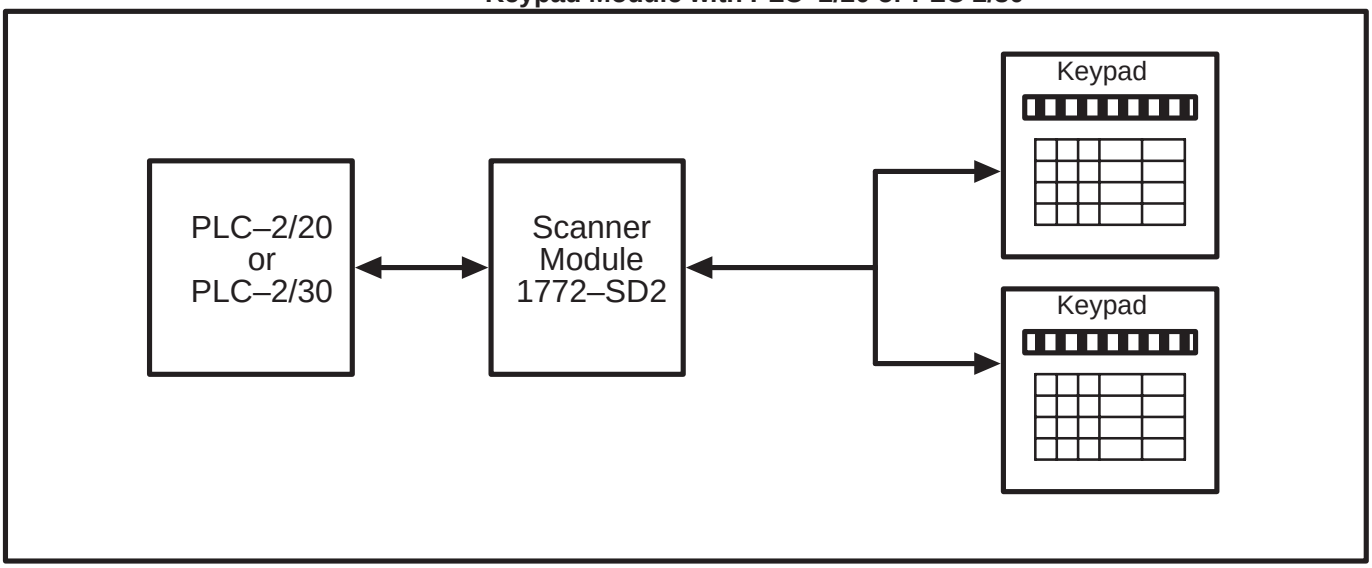

Artisan Technology Group - Quality Instrumentation ... Guaranteed | (888) 88-SOURCE | www.artisantg.com

Remote I/O Architecture (continued)

Figure 4.3
Keypad Module with PLC–3

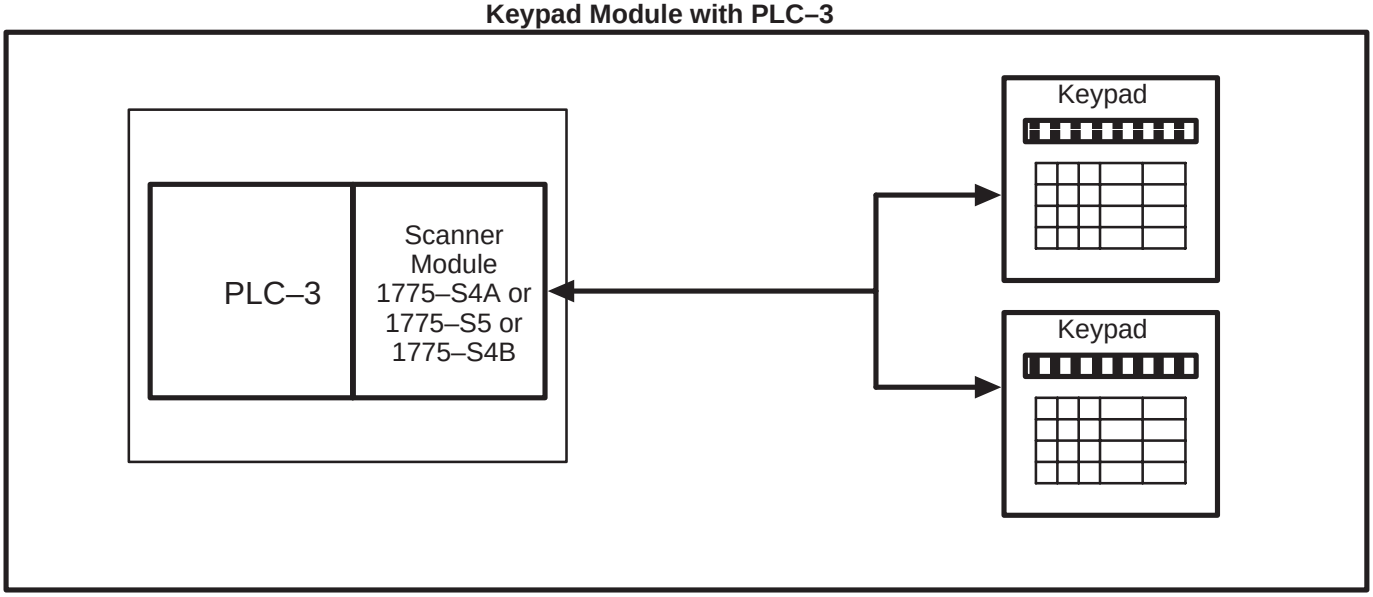

Figure 4.4
Keypad Module with PLC–3/10

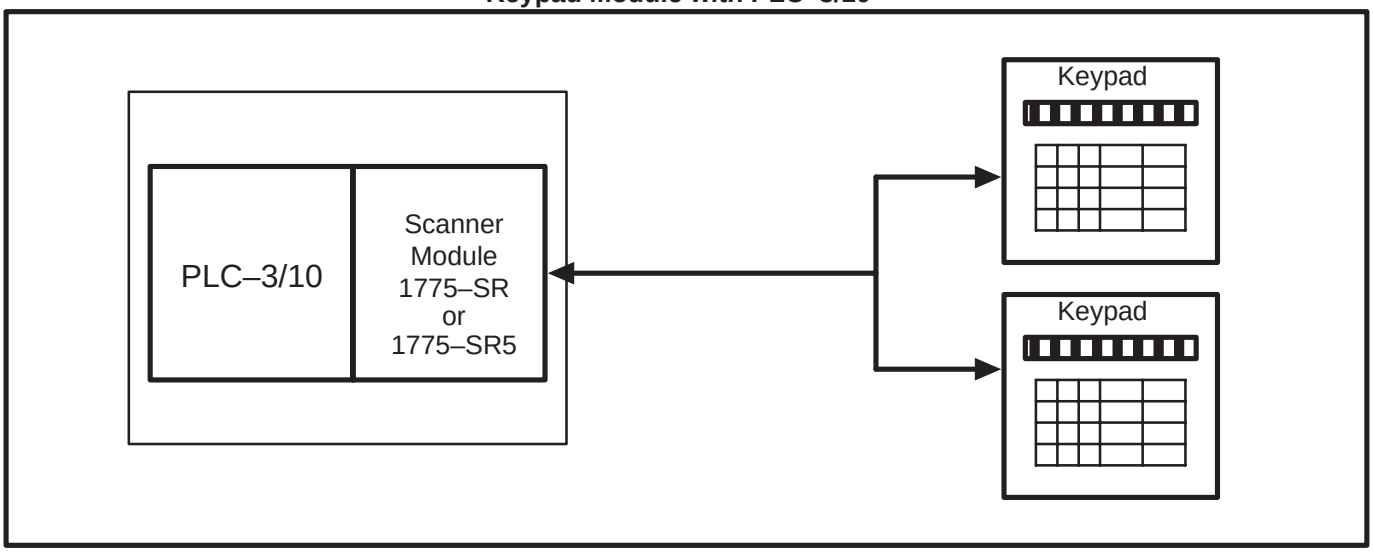

Artisan Technology Group - Quality Instrumentation ... Guaranteed | (888) 88-SOURCE | www.artisantg.com

Figure 4.5
Keypad Module with PLC–5/15, 5/25

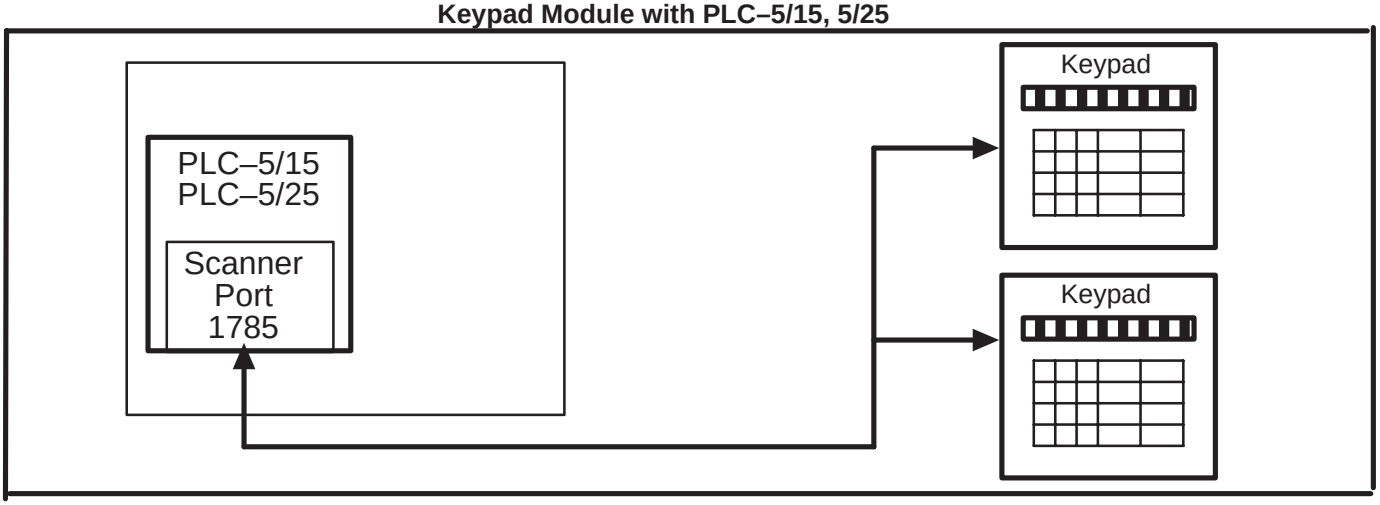

Figure 4.6
Keypad Module with any PLC–5 and Sub–Scanner

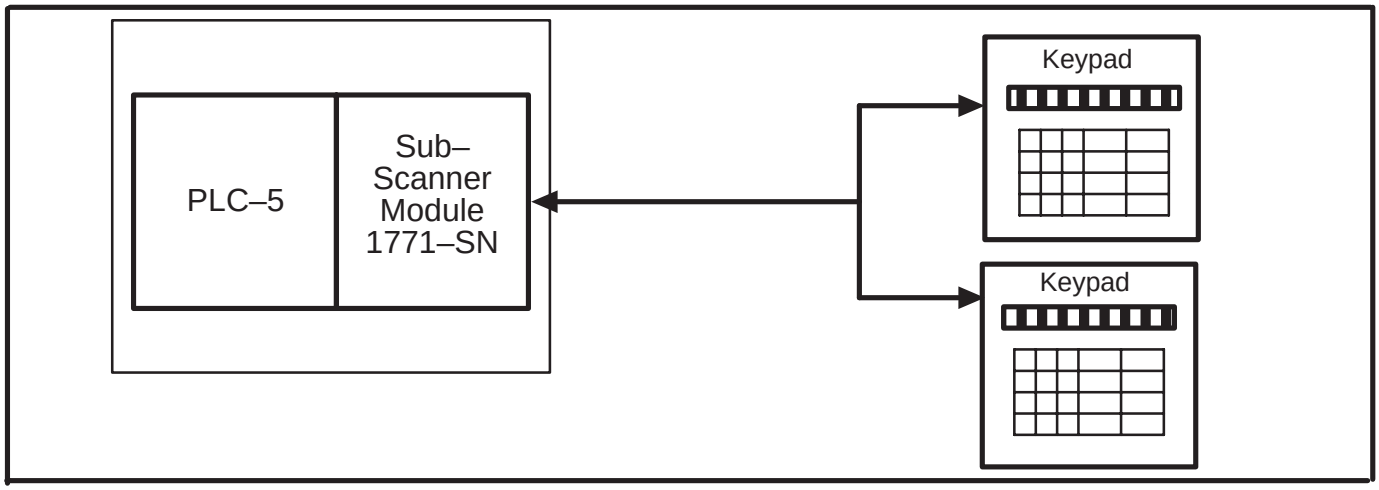

Artisan Technology Group - Quality Instrumentation ... Guaranteed | (888) 88-SOURCE | www.artisantg.com

Figure 4.7
Keypad Module with SLC–5/02

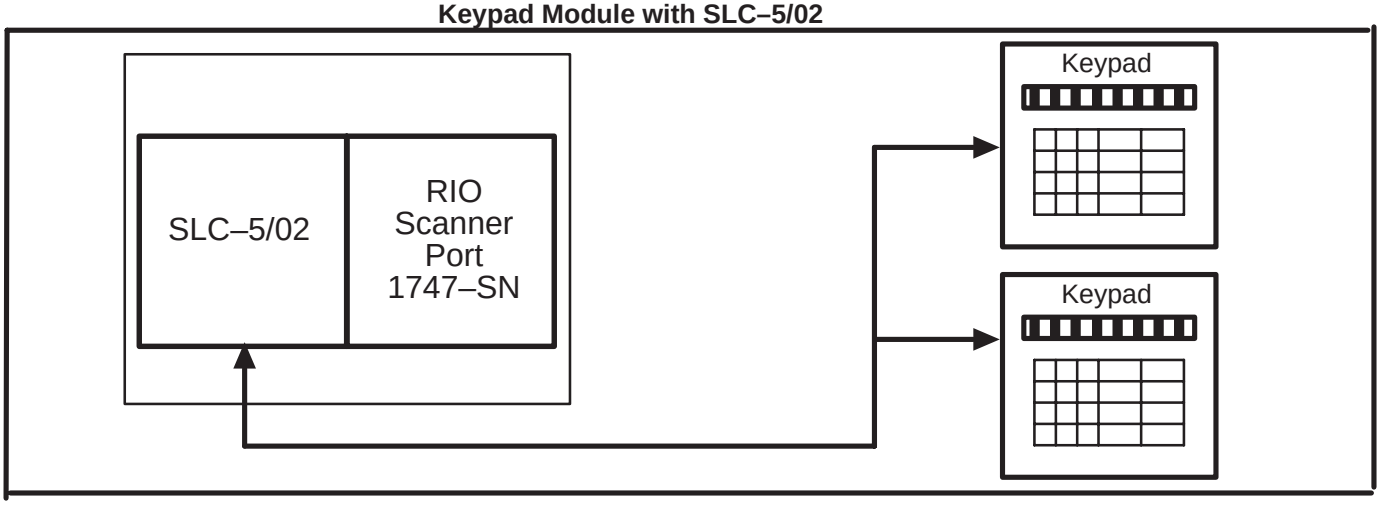

Compatible PLC Controllers and Scanners

The Bulletin 2705 Keypad Module is compatible with all Allen–Bradley scanners that support remote I/O. Tables 4.A, 4.B and 4.C on this and the following page list applicable PLC's and scanners.

The 1771–SN sub I/O scanner module allows a local PLC–2 or PLC–5 family processor to communicate with one to seven remote I/O racks.

Table 4.A
Applicable Programmable Controllers

Catalog Number	Description	Related Pub. No.
1772–LP1	PLC–2/20	1772–6.8.1
1772–LP2	PLC–2/20	1772–6.8.1
1772–LP3	PLC–2/30	1772–6.8.3
1775–L1, L2	PLC–3	1775–6.4.1
1775–LP4, LP8	PLC–3/10	1775–2.20–DUI
1785–LT	PLC–5/15	1785–6.8.2
1785–LT2	PLC–5/25	1785–6.8.2
5250–LP1,– LP2	PLC–5/250	5000–2.17
1785–L40	PLC–5/40	1785–2.1
1785–L60	PLC–5/60	1785–2.1
1747–L524	SLC–5/02	1747–804

Artisan Technology Group - Quality Instrumentation ... Guaranteed | (888) 88-SOURCE | www.artisantg.com

Table 4.B
Applicable Programmable Controllers Requiring 1771-SN Sub-scanner*

Catalog Number	Description	Related Pub. No.
1772–LS, LSP	Mini–PLC–2/05	1772–6.8.6
1772–LV	Mini–PLC–2/15	1772–6.8.2
1772–LX, LXP	Mini–PLC–2/16	1772–2.26
1772–LW, LWP	Mini–PLC–2/17	1772–2.25
1772–LN	Mini–PLC–2	1772–6.8.4
1785–LT3	PLC–5/12	1785–6.8.2

* The 1771–SN sub I/O scanner can be used with any PLC-2 or PLC-5 family processor.

Table 4.BA
Applicable Programmable Controllers Requiring 1747-SN Sub-scanner

Catalog Number	Description	Related Pub. No.
1747–SN	SLC–5/02	1747–NM005

Table 4.C
Applicable Scanners

Catalog Number	Description	Related Pub. No.
1772–SD, SD2*	Remote scanner/distribution panel for PLC–2 family.	1772–2.18
1771–SN	Sub I/O scanner module for PLC–2 and PLC–5 families.	1771–2.91
1775–SR, SR5	I/O Scanner Communication Adapter Module for PLC–3/10 family.	1775–6.5.5
1775–S4A 1775–S4B 1775–S5	I/O scanner–programmer interface module for PLC–3 family.	1775–6.5.2 1775–6.5.3 1775–6.5.5
1785	I/O scanner–message handling module for PLC–5 /15 & 5/25	1785–6.6.1 1785–6.8.1
5250–RS	Remote scanner for PLC–5/250	5000–2.17
6008–SI	IBM PC I/O Scanner Module	6008–6.5.3
6008–SV	VME Bus I/O Scanner Module	6008–6.5.2
1747–SN	Remote I/O Scanner	1747–NMoo5

* Scanner 1772–SD2 Revision 3 or later.

Artisan Technology Group - Quality Instrumentation ... Guaranteed | (888) 88-SOURCE | www.artisantg.com

Calculating Rack Size

The 2705 Keypad Module can be configured for any of four rack sizes: $^1/_4$, $^1/_2$, $^3/_4$, and a full rack. Rack sizes relate to the amount of I/O accessible to each rack: 32 I/O bits or points for $^1/_4$ rack, 64 for $^1/_2$ rack, 96 for $^3/_4$ rack and 128 for a full rack. You set DIP switches for the rack size you want in your system design. See Chapter 5 on DIP switch settings.

IMPORTANT NOTE: For stored messages, you must configure for $^1/_2$ rack or larger. You cannot use stored messages with $^1/_4$ rack.

Note: Stored message display requires $^3/_4$ rack to use the BCD mode. BCD mode can only be configured for $^1/_4$ or $^1/_2$ rack if message storage is disabled.

Table 4.D shows the functional characteristics of the Keypad Module configured in the available rack sizes:

Table 4.D
2705 Keypad Module Functions by Rack Size

Rack Size	Stored Message Capability	BCD Mode		Binary or Integer Mode (8 Digits)	Number of Destination Bits
		Number of BCD Digits	Number of ASCII Characters from PLC	Number of ASCII Characters from PLC	
$^1/_4$ Rack	No	6	0	0	0
$^1/_2$ Rack	BCD=N Other=Yes	8	2	4	16
$^3/_4$ Rack	Yes	8	8	8	BCD=32 Others=48
Full Rack	Yes	8	10	12	BCD=64 Others=80

Artisan Technology Group - Quality Instrumentation ... Guaranteed | (888) 88-SOURCE | www.artisantg.com

Remote I/O Configuration

Once you have selected the appropriate scanner for the PLC controller, Table 4.E below lists how many separate chassis the scanner can support and how much I/O it can address.

For any given application, the total of all the I/O used by each device (I/O rack, drive system, or RediPANEL Module) connected to the cable gives the amount of full racks of I/O being supported by the scanner or sub–scanner for that application.

For SLC–5/02 applications using the 1747–SN Remote I/O Scanner, refer to Publication 1747–NM005.

PLC Processors	Physical	Logical	Physical	Logical
Mini–PLC's 2/05 2/15 2/16 2/17	——	——	16 Devices [1]	7 Racks
PLC–5/12	——	——	16 Devices [1]	7 Racks
PLC–5/15 [2]	12 Devices	3 Racks	16 Devices [1]	7 Racks
PLC–5/25 [3]	16 Devices	7 Racks	16 Devices [1]	7 Racks
PLC–5/250	32 Devices/ Scanner; 4 Scanners/ Processor	8 Racks/Scanner; 4 Scanners/ Processor	16 Devices [1]	7 Racks
PLC–2/30	16 Devices / channel 2 Channels/ scanner	7 Racks total	16 Devices [1]	7 Racks
PLC–3	16 Devices/ channel 4 Channels/ scanner	32 Racks (64 using complimentary I/O)	16 Devices [1]	7 Racks
PLC–3/10	16 Devices/ channel 4 Channels/ scanner	16 Racks total	16 Devices [1]	7 Racks

[1] Two of these may be Bulletin 1771 chassis.
[2] PLC–5/15 Series B Revision H or later have partial rack addressing. Earlier versions were limited to (3) full rack devices.
[3] PLC–5/25 Series A Revision D or later have partial rack addressing. Earlier versions were limited to (7) full rack devices.

Artisan Technology Group - Quality Instrumentation ... Guaranteed | (888) 88-SOURCE | www.artisantg.com

Chapter 5

Selecting Options

Chapter Objectives

This chapter describes DIP switch location and functions on the Bulletin 2705 RediPANEL Keypad Module. It also lists the switch bank settings for selecting function and configuration options.

DIP Switches

See Figure 5.1 to identify the Keypad Module switch banks.

Figure 5.1
Switch Bank Location and Functions on Bulletin 2705 Keypad Module

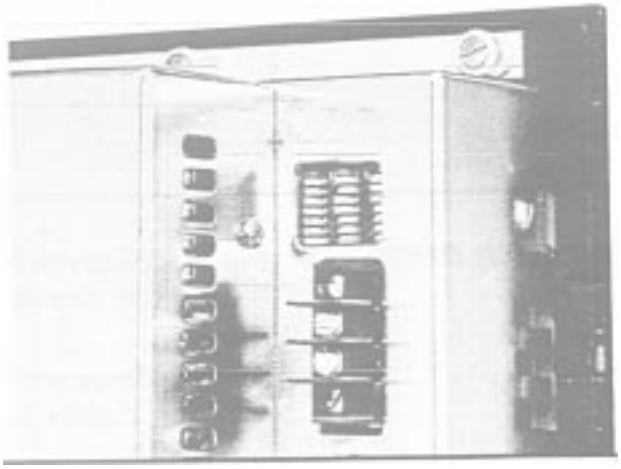

Switch bank #1 (SW–1) sets the rack address.

Switch bank #2 (SW–2) controls format and communication parameters: baud rate, data format, and the modes for Destination Bits, Last Rack, Keyswitch, Handshake and Last State.

Switch bank #3 (SW–3) establishes rack size and the modes for Stored Message Display, Split Display and Keyboard type.

IMPORTANT NOTE: Remove power from the module before setting DIP switches. Switch settings are scanned only on power–up.

Artisan Technology Group - Quality Instrumentation ... Guaranteed | (888) 88-SOURCE | www.artisantg.com

Typical Switch Settings

The following figures show examples of DIP switch settings. Figure 5.2 illustrates the “ON” and “OFF” positions of the DIP switches.

Figure 5.2
Setting DIP Switches

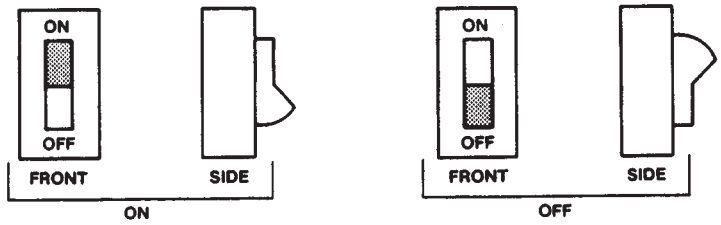

“ON” and “OFF” position examples. The switch setting is indicated by shading.

Setting Switch Bank #1

Figure 5.3 gives functions and settings for Switch Bank #1. Notice that the rack address settings apply only to PLC–2 or any other PLC usung a 1771–SN Sub I/O Scanner Module.

Rack address settings for PLC–3, PLC–5/15 and PLC–5/25 are listed in Figure 5.4 on the following page.

Figure 5.3
Setting Switch Bank #1 for PLC–2 or any other PLC using a 1771–SN

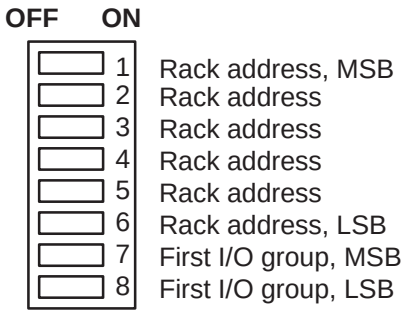

SW–1

Specifying Rack Address for PLC–2 family or any other PLC using a 1771–SN sub I/O Scanner Module

I/O Rack Address	Switch Settings					
	1	2	3	4	5	6
1	on	on	on	on	on	on
2	on	on	on	on	on	off
3	on	on	on	on	off	on
4	on	on	on	on	off	off
5	on	on	on	off	on	on
6	on	on	on	off	on	off
7	on	on	on	off	off	on

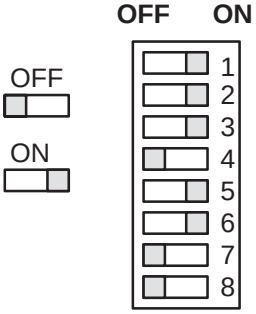

Example

PLC–2
I/O rack
number 5

First I/O
group 6

Specifying First I/O Group

First I/O Group	Switch Settings	
	7	8
0	on	on
2	on	off
4	off	on
6	off	off

Artisan Technology Group - Quality Instrumentation ... Guaranteed | (888) 88-SOURCE | www.artisantg.com

Figure 5.4 lists the rack address settings on Switch Bank #1 for PLC–3, PLC–5/15, PLC–5/25 and SLC–5/02 controllers.

Figure 5.4 Setting Switch Bank #1 for PLC–3, PLC–5/15, PLC–5/25 and SLC–5/02.

Specifying Rack Address for PLC–3 or PLC–5

I/O Rack Address	Switch Settings					
	1	2	3	4	5	6
00*	on	on	on	on	on	on
01	on	on	on	on	on	off
02	on	on	on	on	off	on
03	on	on	on	on	off	off
04	on	on	on	off	on	on
05	on	on	on	off	on	off
06	on	on	on	off	off	on
07	on	on	on	off	off	off
10	on	on	off	on	on	on
11	on	on	off	on	on	off
12	on	on	off	on	off	on
13	on	on	off	on	off	off
14	on	on	off	off	on	on
15	on	on	off	off	on	off
16	on	on	off	off	off	on
17	on	on	off	off	off	off
20	on	off	on	on	on	on
21	on	off	on	on	on	off
22	on	off	on	on	off	on
23	on	off	on	on	off	off
24	on	off	on	off	on	on
25	on	off	on	off	on	off
26	on	off	on	off	off	on
27	on	off	on	off	off	off
30	on	off	off	on	on	on
31	on	off	off	on	on	off
32	on	off	off	on	off	on
33	on	off	off	on	off	off
34	on	off	off	off	on	on
35	on	off	off	off	on	off
36	on	off	off	off	off	on
37	on	off	off	off	off	off

I/O Rack Address	Switch Settings					
	1	2	3	4	5	6
40	off	on	on	on	on	on
41	off	on	on	on	on	off
42	off	on	on	on	off	on
43	off	on	on	on	off	off
44	off	on	on	off	on	on
45	off	on	on	off	on	off
46	off	on	on	off	off	on
47	off	on	on	off	off	off
50	off	on	off	on	on	on
51	off	on	off	on	on	off
52	off	on	off	on	off	on
53	off	on	off	on	off	off
54	off	on	off	off	on	on
55	off	on	off	off	on	off
56	off	on	off	off	off	on
57	off	on	off	off	off	off
60	off	off	on	on	on	on
61	off	off	on	on	on	off
62	off	off	on	on	off	on
63	off	off	on	on	off	off
64	off	off	on	off	on	on
65	off	off	on	off	on	off
66	off	off	on	off	off	on
67	off	off	on	off	off	off
70	off	off	off	on	on	on
71	off	off	off	on	on	off
72	off	off	off	on	off	on
73	off	off	off	on	off	off
74	off	off	off	off	on	on
75	off	off	off	off	on	off
76	off	off	off	off	off	on

*Rack 00 not valid with PLC–5s

Specifying First I/O Group

First I/O Group	Switch Settings	
	7	8
0	on	on
2	off	on
4	on	off
6	off	off

Artisan Technology Group - Quality Instrumentation ... Guaranteed | (888) 88-SOURCE | www.artisantg.com

Setting Switch Bank #2

Figure 5.5 gives the switch functions and settings for switch bank #2.

Figure 5.5
Setting Switch Bank #2

Figure 5.5
Setting Switch Bank #2

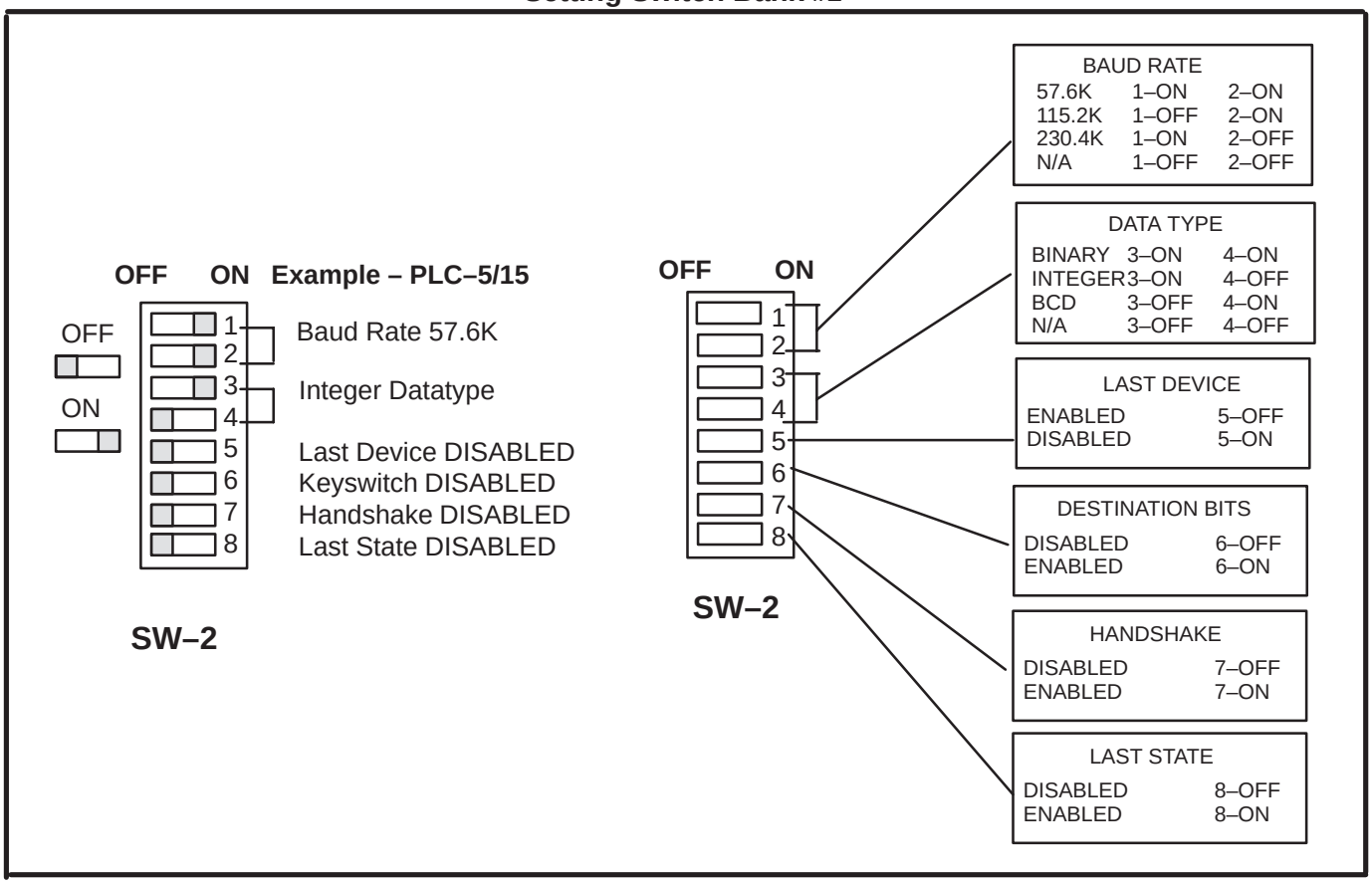

Set BAUD RATE to 57.6K for PLC–5/15 and 5/25 or the module will not communicate with the PLC.

Set LAST DEVICE to OFF position to tell the scanner module that the Keypad module is the last device of that logical rack, not necessarily the last device on the I/O link.

Enable HANDSHAKE to allow the use of the handshake bit which holds an input signal on until the PLC acknowledges data receipt. If you disable HANDSHAKE, the module uses a timed mode (100 millisecond delay) to make sure the PLC reads the input signal. Handshaking is explained in detail in Chapter 7.

Enable LAST STATE to lock the module up (hold the display in its last state) if communication with the PLC is lost. If you disable LAST STATE, the display will clear instead of locking up. When communication is reestablished, the module updates itself, and resumes operation.

Artisan Technology Group - Quality Instrumentation ... Guaranteed | (888) 88-SOURCE | www.artisantg.com

Setting Switch Bank #3

Figure 5.6 gives the switch functions and settings for Switch Bank #3. These switch bank #3 settings are for all PLC's.

Figure 5.5
Setting Switch Bank #2

Figure 5.6
Setting Switch Bank #3

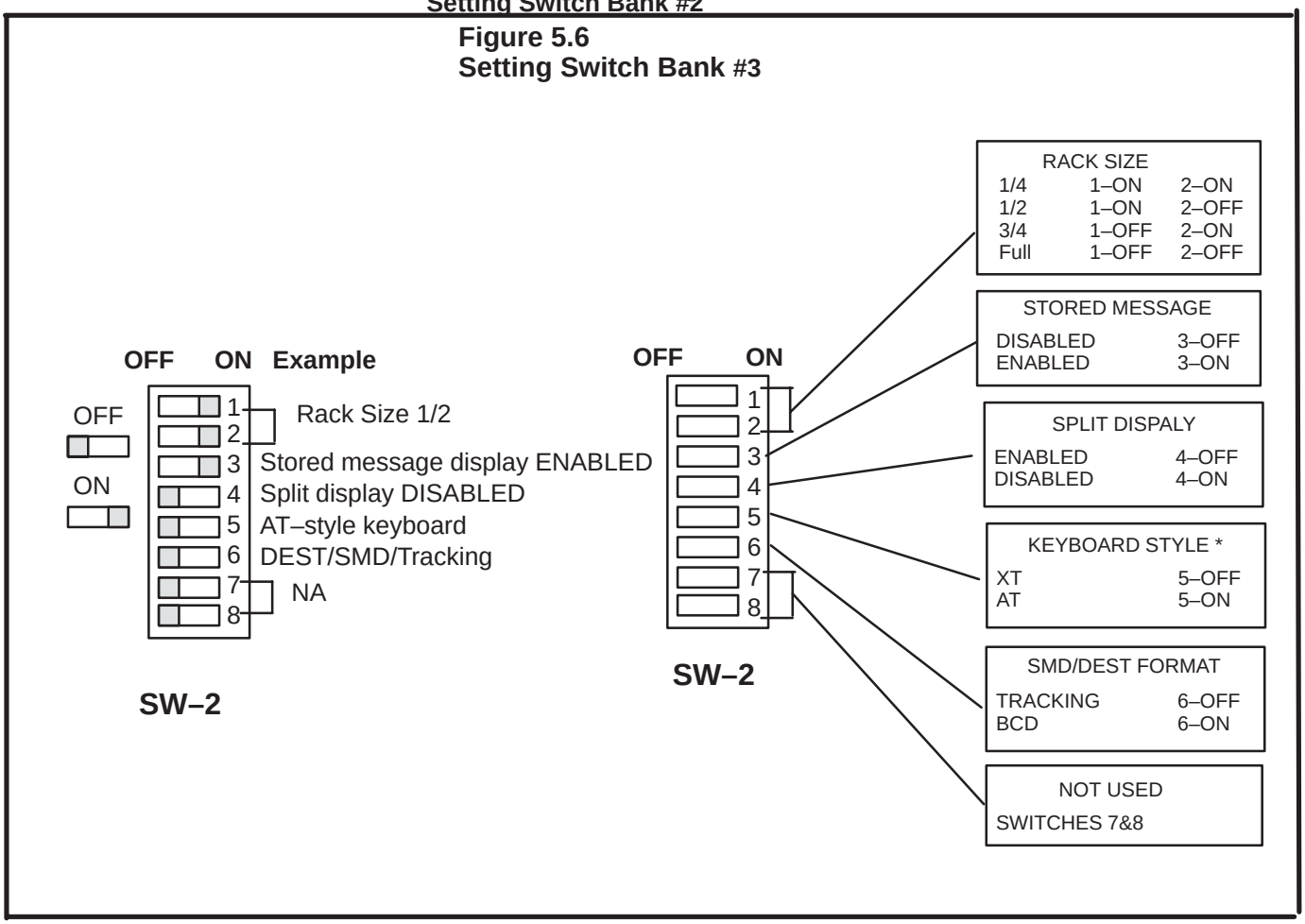

Enable STORED MESSAGE to be able to store and retrieve messages on the EEPROM inside the keypad module. If STORED MESSAGE is disabled, messages can only be retrieved from PLC memory.

Enable SPLIT DISPLAY to control what is displayed during operator entry. Refer to page 6–4 for more information.

The DEST. and SMD FORMAT controls the numeric format for the destination word in the input image table and the SMD word in the output image table.

When BCD is selected the SMD and destination numbers are in BCD format. When TRACKING is selected these values will follow the data type set by DIP switches 3 and 4 on switch bank #2.

Note: On Series B Revision D or earlier modules, DIP switch 6 on switch bank #3 is not used and the format is always BCD.

Artisan Technology Group - Quality Instrumentation ... Guaranteed | (888) 88-SOURCE | www.artisantg.com

Chapter 6

Operating Modes

Chapter Objectives

This chapter describes the operating modes of the Bulletin 2705 RediPANEL Keypad Module. Topics include:

- PLC output display of numeric and ASCII data and 16–character messages
- Data entry, decimal modes, split display data entry
- Message entering, storing and editing
- Destination entry

Keypad Output Display

The Keypad Module's vacuum fluorescent display shows 16 alphanumeric characters. Figure 6.1 shows the features of the display.

Figure 6.1
Keypad Module Display

Artisan Technology Group - Quality Instrumentation ... Guaranteed | (888) 88-SOURCE | www.artisantg.com

Numeric Data

Numeric data appears on the right–hand side of the display in the eight right–most character positions. These positions display eight digits (seven for negative numbers). The decimal point, if used, does not require an additional character position.

ASCII Data

Text starts on the left–most element. Text is displayed left to right.

Display Stored Message

A maximum of 16 ASCII characters can be displayed when using a stored message. What is shown on the display is controlled by the DM bit in the Output Image table.

When DM=0, only the first eight ASCII characters show up on the left hand side of the display and the right–most positions of the display show the numeric data.

When DM=1, all 16 ASCII characters are displayed and no numeric data is displayed.

ASCII Message Display

The ASCII message is stored in the PLC and moved to the Output Image table of the Keypad Module to display the message. Each word defined in the Output Image table, as alphanumeric characters, can hold a numbered code for two characters. The PLC program can also be used to send up to 12 ASCII characters to the display. **Note** – Refer to the Appendix for the alphanumeric sub–set that the Keypad Module can support.

The first word of alphanumeric characters in the Output Image table represents position one and two of the Keypad Module display when looking left to right. The rest of the Output Image table words assigned to the alphanumeric characters follow the same pattern, Word 2 = positions 3 and 4, etc. When the DM = 1, more than eight ASCII characters can be displayed on the Keypad Module. See chapter 7 for an example of an I/O Image table.

Artisan Technology Group - Quality Instrumentation ... Guaranteed | (888) 88-SOURCE | www.artisantg.com

Data Entry

The Keypad Module offers a standard numeric keypad interface with a polarity (minus sign) key and a decimal point as shown in Figure 6.2. Additional features are DELETE and ENTER keys, and six programmable function keys with LED's.

Figure 6.2
Keypad Layout

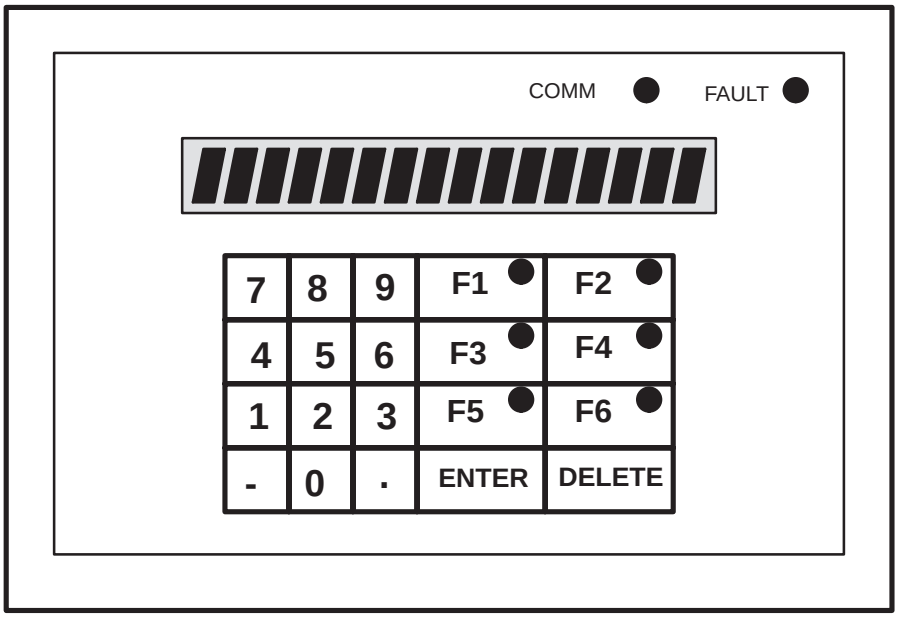

The Keypad Module accepts up to eight digits of data.

- Six digits for $^1/_4$ rack BCD (0 to 999,999)
- Eight digits for $^1/_2$ rack BCD (0 to 99,999,999)
- Five digits for binary (0 to 65,535)
- Five digits for integer (–32,767 to 32,767)

The module ignores any digits after the first eight. **Note** – For binary and integer the numeric value is checked for being in range before it is sent to the PLC.

The DELETE key clears one character at a time. Each deletion shifts previously entered characters one position to the right.

Each function key and its LED is individually programmable through bits in the PLC image tables.

Artisan Technology Group - Quality Instrumentation ... Guaranteed | (888) 88-SOURCE | www.artisantg.com

To enter data you must first key in the desired numbers using the numeric keypad. The data will appear on the right hand side of the display as the numbers are being keyed. To complete data entry you must press the ENTER key. The entered data is placed directly into the data word(s) of the Input Image table. Any ASCII characters in the left hand side of the display remain there during data entry, unless the Split Display feature is enabled.

Split Display

This feature controls the display during operator entry. Split display must be enabled (DIP switch 4 on switch bank #3) and DM=0.

When the operator starts entering data, the data shown in the right half of display is placed in the left half. The operator can then enter new data in the right half.

Decimal Modes

The decimal point key allows you to input decimal numbers. You control the position of the decimal point, either fixed or floating, by setting bits in the output image table. See Chapter 7 for input and output image tables.

Polarity

The polarity key (minus sign) allows you to change the polarity of numbers. The minus sign uses one character position, limiting negative numbers to seven digits.

Destination Entry

The keypad module has an additional entry feature known as the destination function. This feature is selected by DIP switch 2 on switch bank #2. It is typically used to load data values into multiple locations, such as a series of timer/counter presets, loop setpoints, etc.

This function uses the destination word and destination bits in the Input Image table. The keypad operator enters a destination number that defines which timer, counter, or PLC memory location is to be accessed. The operator can then enter new data or monitor the present data in that timer, counter, or PLC memory location

Artisan Technology Group - Quality Instrumentation ... Guaranteed | (888) 88-SOURCE | www.artisantg.com

.

Figure 6.3
Display for Destination Entry

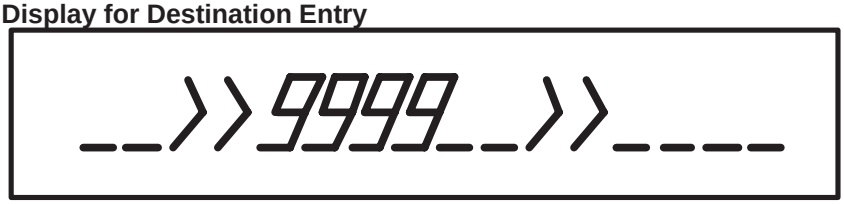

The keypad operator starts by pressing the ENTER key. The present destination is displayed between the >>——>> symbols as shown in Figure 6.3. The flashing >> symbol prompts the operator for a new destination number, followed by another ENTER keystroke. After the second ENTER, the new destination is mapped directly into the destination word.

When the destination number is entered, its corresponding destination bit will be ON and all other destination bits are OFF. If destination “5” is entered, then the 5th destination bit is on and all others off. The PLC program can utilize that “ON” bit to MOV, GET, or PUT data to/from the appropriate timer, counter, memory location, etc.

The DELETE key and Minus (–) key can be used during destination entry. Depress the DELETE key to delete one character at a time. Depress the MINUS (–) key to abort destination entry.

A programming example of the destination function is presented in Chapter 7, Page 7–9.

Messages

The Keypad Module stores up to 120 (16–character) messages in EEPROM. Refer to Page 6–2 for ASCII Message information. You create, store and edit the messages with an external keyboard. A message is displayed when the program calls the storage identification number assigned to the message. Refer to Page 7–1 for more information.

There are two methods of entering messages:

- IBX–XT/AT style keyboard
- IBM PC or compatible with Keypad Programming Software (Catalog Number 2705–ND1). The user’s manual provided with the software describes how to enter messages using this method.

Keyboard

You enter messages into the module with an IBM–XT/AT or compatible keyboard. The keyboard plugs into a round 5–pin DIN receptacle on back of the Keypad Module. Figure 6.4 shows the location of the receptacle and Figure 6.5 shows pin locations.

Artisan Technology Group - Quality Instrumentation ... Guaranteed | (888) 88-SOURCE | www.artisantg.com

The Message Editor inside the module is accessed by the keyboard when any key is depressed. A prompt appears on the display to begin the editing process. The Message Editor contains commands to create, edit and save single line, 16–character alphanumeric messages. Each message is assigned a message number for reference by the PLC or for future editing.

Figure 6.4
Keyboard Plug Receptacle

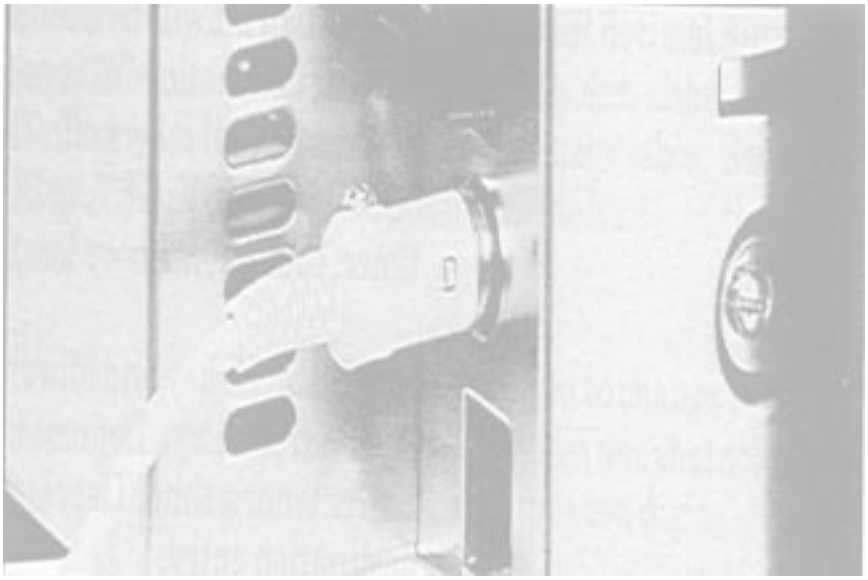

Figure 6.5
Keyboard Plug Receptacle Pin Locations

PIN 1 = KB CLOCK
2 = KB DATA
4 = GROUND
5 = +5 VOLTS

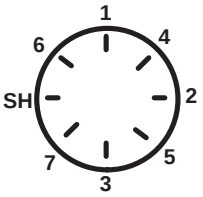

Artisan Technology Group - Quality Instrumentation ... Guaranteed | (888) 88-SOURCE | www.artisantg.com

Entering Messages

The procedure for entering messages into the module is interactive:

Step 1 - Remove power before plugging keyboard into the module.

Step 2 - Depress any key to enter the edit mode.

Step 3 - The module asks you for a message number:

EDIT MESSAGE 001

Step 4 - Type a message number (1 to 120) and depress ENTER or depress ENTER to edit message number displayed.

Step 5 - If the number you entered has a message assigned to it, the module displays that message for you to edit.

If the number is unassigned, you get a blank display, with the cursor in the left–most position.

Step 6 - Enter a message by typing the text you want - up to 16 characters. (See the following page for a list of editing commands.)

Step 7 - Depress ENTER to complete the message and save it in EEPROM.

Step 8 - The module adds one to the message number, then

Step 9 - Depress Control–R any time to end the entry / edit session.

Storing

Messages go into EEPROM as you create them. When you depress ENTER to complete a message, the Module stores the message automatically. No special procedures are needed.

Editing

The message editing function is exactly the same as the message entry function.

When you have a message on the display, any characters you type will overwrite the characters on the display. Store the message, when you have it to your liking, by depressing ENTER.

Artisan Technology Group - Quality Instrumentation ... Guaranteed | (888) 88-SOURCE | www.artisantg.com

Editing Commands

The editing commands are single key strokes:

Left arrow (←)	-	Move cursor one position to the left.
Right arrow(→)	-	Move cursor one position to the right.
Down arrow(↓)	-	Decrement number of message to be created or edited.
Up arrow(↑)	-	Increment number of message to be created or edited.
Control–B	-	Set message FLASH attribute.
Control–D	-	Delete message and return to run mode.
Control–F	-	Display number of free messages.
Control–R	-	End edit and save current message, then go to RUN mode.
Control–S	-	Select message number.
ENTER	-	Save message being edited, and move on to the next message.
ESC	-	Cancel current edit and return to run mode.
Control–E	-	Correct “EEPROM CRC ERROR” and return to run mode.
Control–I	-	Initialize messages and return to run mode.

Note –Messages may also be entered/stored on floppy disk and downloaded using a IBM PC or compatible with the Keypad Programming Software (Catalog Number 2705–ND1). Refer to the Software User’s Manual (Catalog Number 2705–ND003) for additional information.

Artisan Technology Group - Quality Instrumentation ... Guaranteed | (888) 88-SOURCE | www.artisantg.com

Chapter 7

Programming

Chapter Objectives

This chapter describes the process of creating a program for the Bulletin 2705 RediPANEL Keypad module. The detailed listing of the program example explains the ladder logic programming.

Introduction Of Programming with the Keypad Module

Applications for the Keypad Module are programmed in the Allen–Bradley PLC controller. The module itself has an on–board message editor that can create and store up to 120 single line messages. These messages are triggered from the program in the PLC.

All operations of the module - inputting data, displaying a PLC register value, displaying a message, and using the function keys - correspond to fixed bits and word locations in the Input and Output Image Table of the PLC controller. For example, depressing a Function Key sends a “1” to its corresponding bit in the Input Image Table. Depressing the ENTER key sends the number that the operator has entered through the numeric keypad to a fixed word location in the Input Image Table. To display a register’s contents you put that value into a word in the Output Image Table. To display a message that is stored in the module, you send its message number to a word in the Output Image Table.

The Input and Output Image Tables for the various combinations of Keypad Module features and rack size configurations are listed after the programming examples.

Artisan Technology Group - Quality Instrumentation ... Guaranteed | (888) 88-SOURCE | www.artisantg.com

PLC-5 Programming Examples

The PLC–5 programming examples given on the following pages are based on the system configuration listed below.

System Configuration

Note – System configuration may vary for different applications.

1. A 1784–T45 Portable Terminal

2. A 1785–LT PLC–5/15 Processor (Ser. B Rev. H, Set for Scanner Mode)

3. A 1771–P4 Power Supply

4. A 1771–A1B 4 slot chassis

5. A 2705–K11C1 RediPANEL Keypad Module (Ser. B Rev. E)

The DIP switches on the Keypad Module have been set to:

A. Rack 2, Module Group 0

B. 57.6k Baud Rate

C. Destination Bits - Enabled

D. Integer Data Type

E. Last Device

F. Rack Size - 1/2

G. Stored Message and Split Screen - Enabled

H. Keyboard Style - “AT”

I. Dest and SMD Format – Tracking

Prior to entering the sample program into the PLC–5, four messages were entered into the Keypad Module. The messages are as follows:

MSG.#001 = ”C5.1 ACC.=”

MSG.#002 = ”C5.1 PRE.=”

MSG.#003 = ”16 CHARACTER MSG.”

MSG.#004 = ”T4:0 PRE =”

Artisan Technology Group - Quality Instrumentation ... Guaranteed | (888) 88-SOURCE | www.artisantg.com

Input and Output Image Tables

Figure 7.1 below shows the Input and Output Image Tables for the system configuration described on Page 2.

Figure 7.1
Integer Mode, 1/2 Rack with Stored Message Display

Input Image Table

Bits	17	16	15	14	13	12	11	10	7	6	5	4	3	2	1	0	INPUT	RACK #	MODULE GROUP (WORD)
	H	EN	F6	F5	F4	F3	F2	F1	–	Dec. Pos.			–	–	–	–	I:	02	0
	Integer Data																I:	02	1
	Destination																I:	02	2
	Destination Bits																I:	02	3

Output Image Table

Bits	17	16	15	14	13	12	11	10	7	6	5	4	3	2	1	0	OUTPUT	RACK #	MODULE GROUP (WORD)
	H	DM	L6	L5	L4	L3	L2	L1	–	Dec. Pos.			DC	SDP			O:	02	0
	Integer Data																O:	02	1
	Stored Message Display Number (SMD)																O:	02	2
	Two Alphanumeric Characters																O:	02	3

EXAMPLE - The address for the function key “F1” in this example would be I:020/10.

The I/O image table shown in Figure 7.1, reflects the Integer data type that the Keypad Module has been configured for. Setting the DIP switches for Integer data type is particularly useful when using the Keypad Module with the PLC–5, because the PLC–5 timer and counter data is stored in an Integer format.

To display the Preset or Accumulated values of these instructions requires only a MOVE instruction. (See Displaying Numeric Data, example #1.) If the Keypad Module had been configured for a Binary or BCD data type, a conversion instruction would have been needed to convert the ACCUM value of the counter to that data type format prior to displaying it on the Keypad Module.

Note: The input image table will only momentarily indicate a state change if F1–F6 is pressed. This change of state may not be displayed in all instances.

Artisan Technology Group - Quality Instrumentation ... Guaranteed | (888) 88-SOURCE | www.artisantg.com

Displaying Numeric Data

Figure 7.2

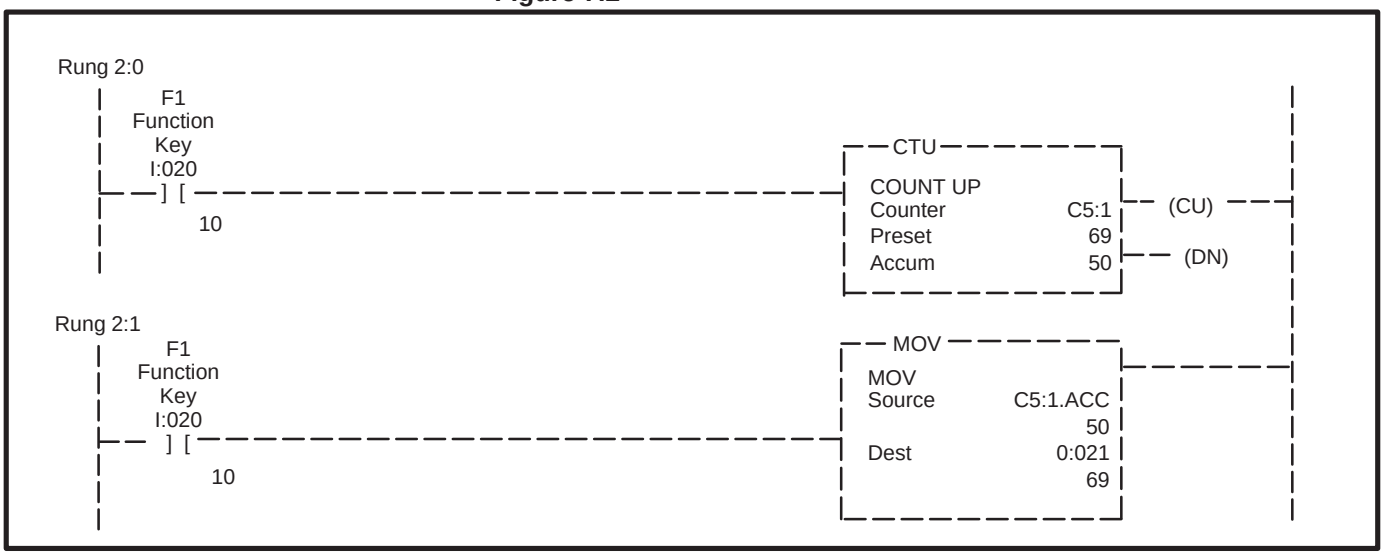

The program example in Figure 7.2 illustrates how the function key, F1, may be used just like a push button or other similar input type device. In this instance, F1 is used to increment the accumulative value of count up counter C5:1 and initiate a MOVE instruction. Each time the F1 function key is pressed, the accumulated value of the counter increases by one and the MOVE instruction moves the new value to the right hand side of the Keypad display.

The Destination address of the MOVE instruction is 0:021 which, for this configuration, is the word in the output image table where integer data is sent to the Keypad Module. (See Figure 7.1, Input and Output Image Tables.) Any integer number sent to this word address will be displayed on the Keypad Module display.

Move instructions aren't the only instructions that may be used to display data on a Keypad Module. Logical, Arithmetic and some File type instructions may also be used. Any method of moving data is acceptable.

Artisan Technology Group - Quality Instrumentation ... Guaranteed | (888) 88-SOURCE | www.artisantg.com

Triggering a Stored Message to Describe Data

The Keypad Module is not only capable of displaying numeric data, but also alphanumeric messages to describe that data. These messages may be stored in the programmable controller and sent to the Keypad Module via ASCII code, or store up to 120 messages in the Keypad Module and trigger them according to their message number. The later method is the most common means of displaying messages on the Keypad Module.

As described earlier in the System Configuration section, several messages have already been entered into the Keypad Module.

Figure 7.3 below shows Rung 2:2 has been added to the sample program. This will trigger a message in the Keypad Module.

Figure 7.3

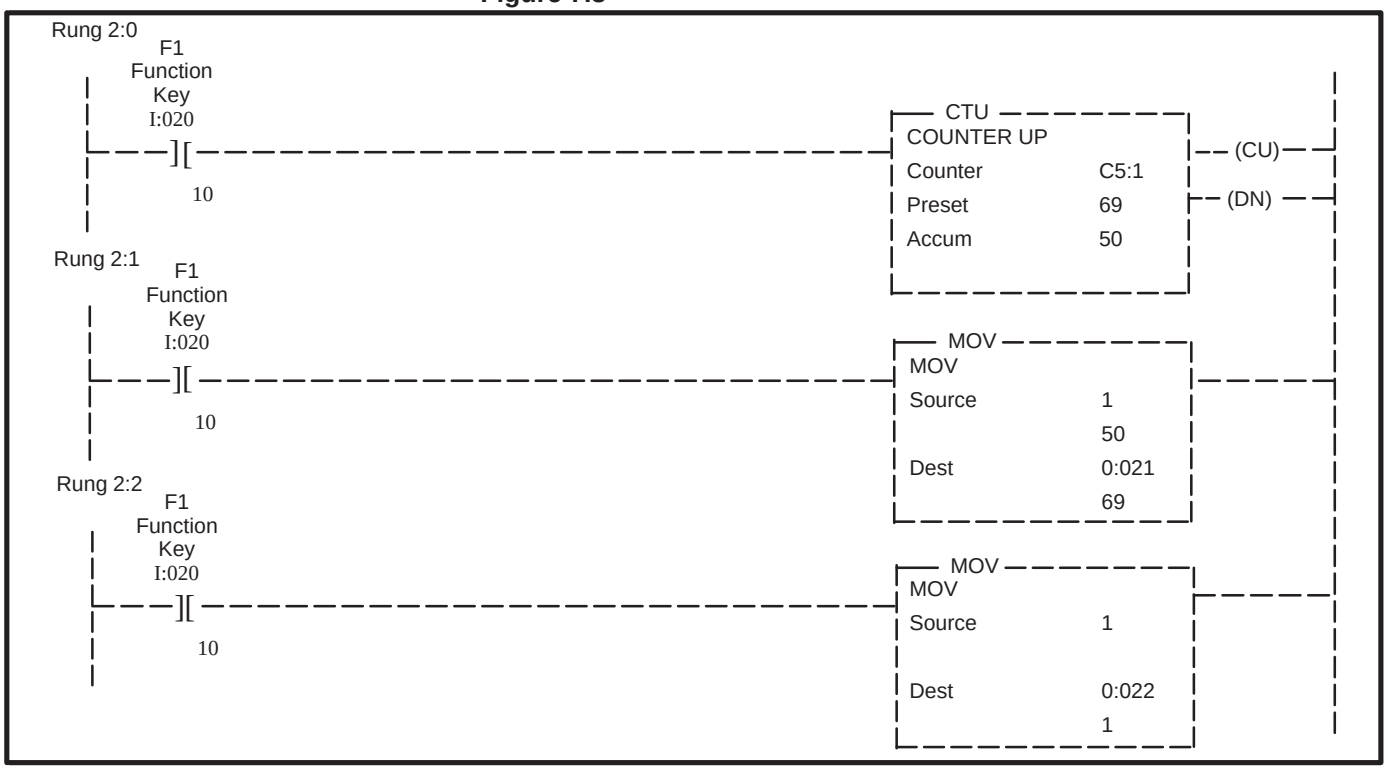

Artisan Technology Group - Quality Instrumentation ... Guaranteed | (888) 88-SOURCE | www.artisantg.com

Rung 2:2 shows how the same input, F1, which is used to move the accumulated value of the counter to the Keypad display, can also trigger a stored message. The MOVE instruction in rung 2:2, moves the constant 1 to 0:022, the word in the output image table where the Stored Message Display (SMD) number is sent to the Keypad Module. (See Figure 7.1, Input and Output Image Tables.) In this case when F1 is pressed, message number 1 ”C5.1 ACC.=” will appear on the left side of the display and C5:1 accumulated value will appear on the right.

In Series B Rev. D or earlier Keypad Modules, the SMD number must be a BCD number only, regardless of what data type the module has been set for.

Displaying a Full Line Stored Message

In some instances the application requires a full line 16–character message, to prompt the operator, display machine status, warnings or fault messages. This is accomplished by turning on the DM bit in the output image table at the same time the message number is moved to the SMD word. The DM bit is the 16th bit of the starting module group word in the output image table. (See Figure 7.1, I/O Image Tables.)

Figure 7.4 below shows one example of how to trigger a 16–character message with PLC–5 ladder logic.

Figure 7.4

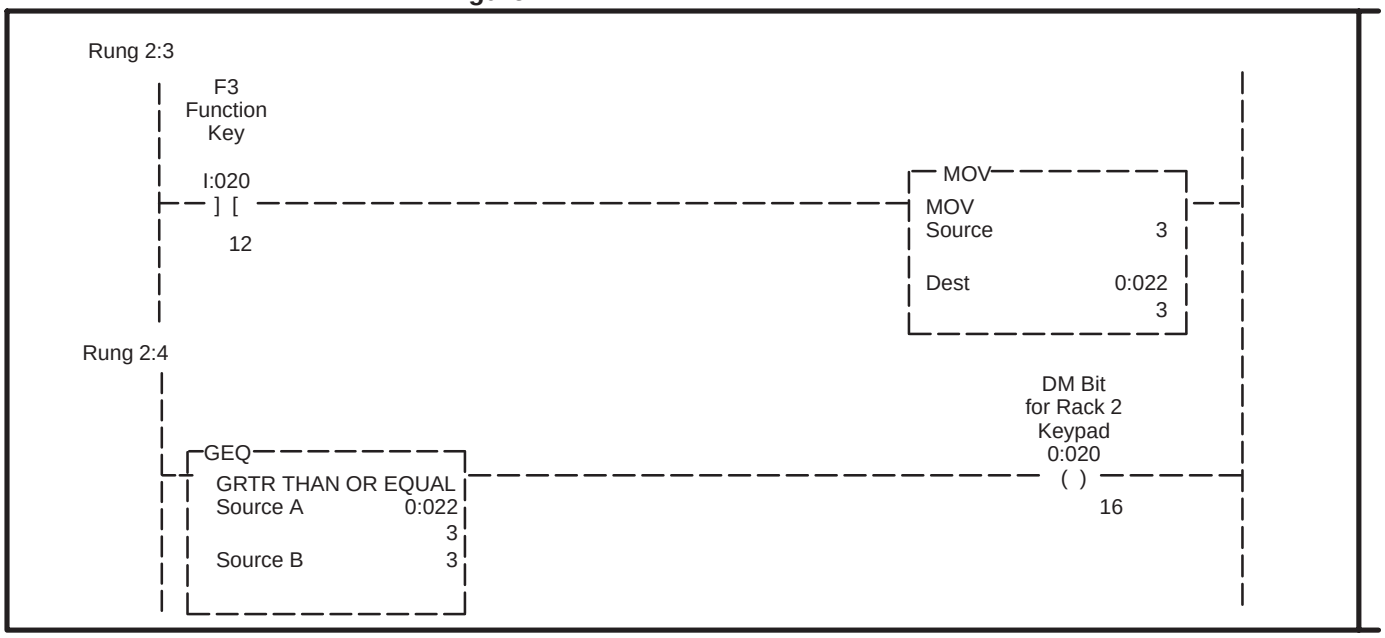

Artisan Technology Group - Quality Instrumentation ... Guaranteed | (888) 88-SOURCE | www.artisantg.com

In Figure 7.4, function key F3 is used to initiate a MOVE instruction. The MOVE instruction, moves the constant 3 to the Keypad module's stored message word 0:022. This in turn triggers stored message number 3 "16 CHARACTER MSG.".

The second rung in Figure 7.4, Rung 2:4 uses a Greater Than/Equal To instruction (GEQ) to control the DM bit. In this case, if the message number being displayed is 3 or more, the DM bit 16 is turned on to allow all 16 characters of the message to be displayed.

The GEQ or LEQ (Less Than/Equal To) instruction can be very useful in this application. For example, if your application requires (30) 16 character messages, use the stored message numbers between 90 and 120. Then you may use the GEQ instruction to turn on the DM bit anytime a stored message number of greater than or equal to 90 is moved to the Keypad. If you wish to use the LEQ instruction, you would enter those (30) messages using the first available stored message numbers of 1 through 30.

Entering or Changing Data with the Keypad Module

To enter or change values in the PLC–5 with the keypad data must be moved from the Input Image table of the Keypad Module to the PLC–5.

Figure 7.5 below shows one example of the ladder logic required to change a PLC–5 counter preset value.

Artisan Technology Group - Quality Instrumentation ... Guaranteed | (888) 88-SOURCE | www.artisantg.com

Figure 7.5

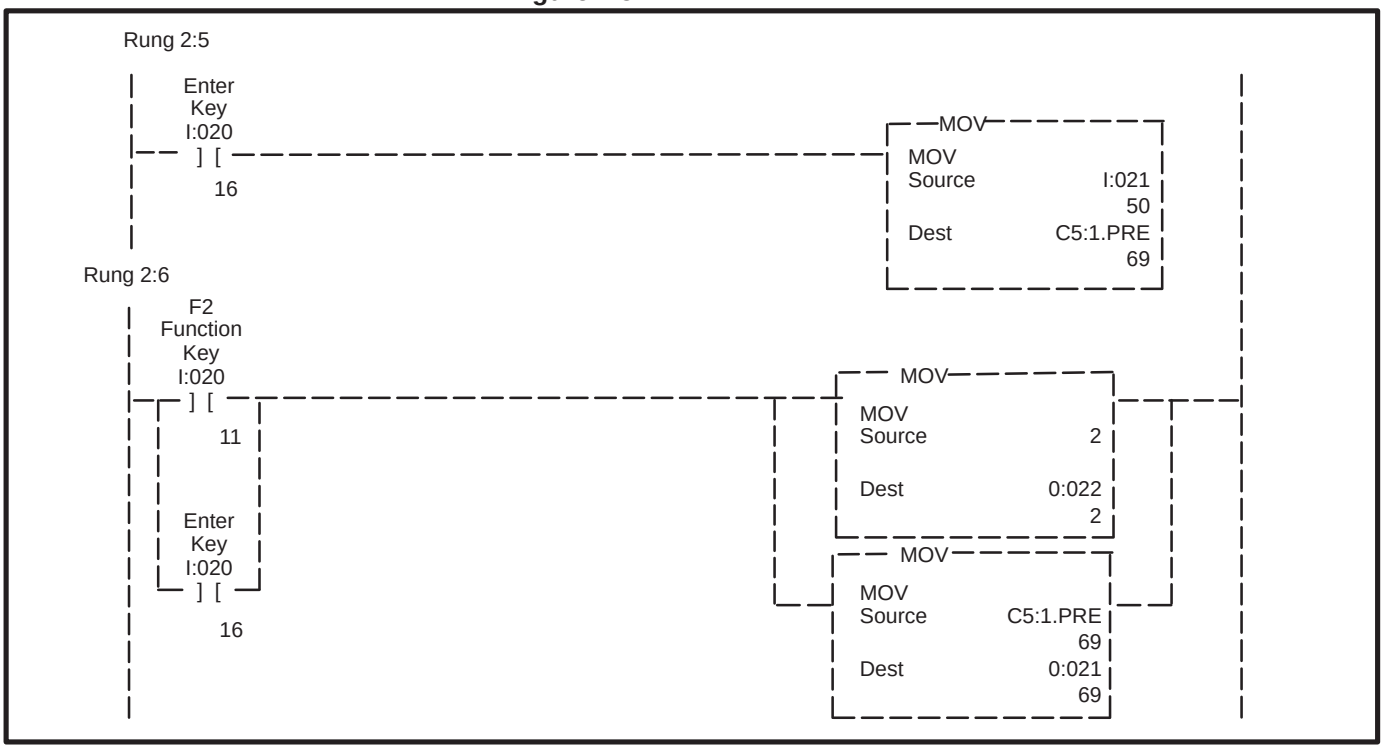

In the example shown in Figure 7.5, rung 2:5 is used to move the value from the input image table, I:021, to counter C5.1 preset, each time the Enter key is pressed.

Rung 2:6 in Figure 7.5 shows how the function key F2 or the Enter key are used to display stored message #2, "C5.1 PRE.=", on the left side of the keypad and the current or new preset value of counter C5.1 on the right. This rung is used strictly to allow the operator to view the value that is about to be changed. To actually change the preset, the new value must first be entered into the input image table. This is accomplished by first punching in the desired preset value using the numeric keys on the Keypad Module, then pressing the ENTER key. The new value is then placed in the input image table or in the case of this particular configuration, word I:021. Placing rung 2:5 before rung 2:6 ensures the new updated preset value will be displayed.

Artisan Technology Group - Quality Instrumentation ... Guaranteed | (888) 88-SOURCE | www.artisantg.com

Using the Destination Function to Load Multiple Timer Presets

The keypad destination function can be used to load data values into multiple timer/counter presets or other PLC memory locations. The example program listed below can be used to load preset values into 17 consecutive timer presets, beginning with T4:0.PRE and ending with T4:16.PRE. Rungs 3 through 16 have been omitted to simplify the example. The keypad is configured for 3/4 Rack, instead of 1/2 Rack as in the previous examples, otherwise all DIP switch settings remain the same. Refer to page 7–30 for an example of a 3/4 rack I/O Image table.

Rungs 1–17 provides a PLC 5/15 example program using the Destination Function.

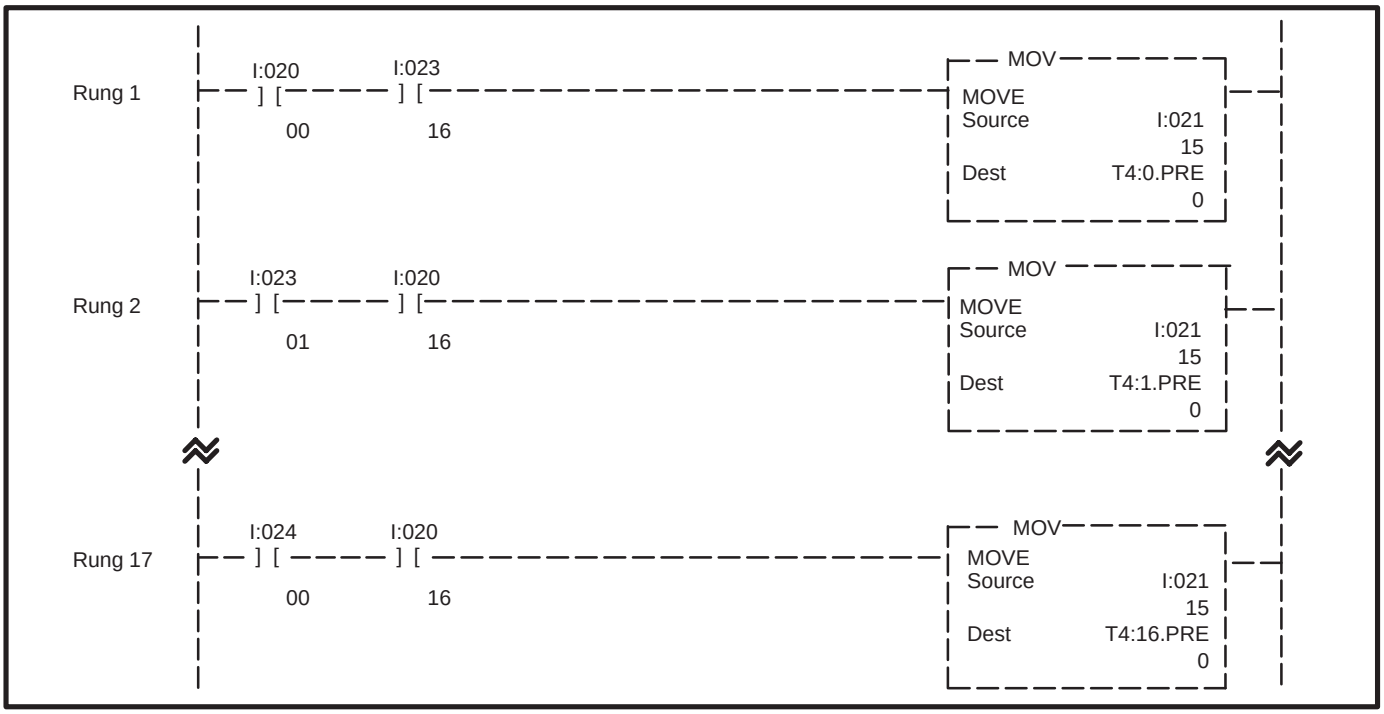

Rung 1:
Destination bit I:023/00 is “ON” when the keypad operator enters destination number “1”. All other destination bits are “OFF”. The ENTER bit I:020/16 prevents data from being moved until the keypad operator enters a new preset for T4:0. The MOVE instruction takes the integer data in I:021 and transfers it to T4:0.PRE.

Rung 2:
Destination bit I:023/01 is “ON” when the keypad operator enters destination number “2”. All other destination bits are “OFF”. The ENTER bit I:020/16 prevents data from being moved until the keypad operator enters a new preset for T4:1. The MOVE instruction takes the integer data in I:021 and transfers it to T4:1.PRE.

Artisan Technology Group - Quality Instrumentation ... Guaranteed | (888) 88-SOURCE | www.artisantg.com

Rungs 3–16:
Would appear the same but with different timer/destination bit addresses.

Rung 17:
Destination bit I:024/00 is “ON” when the keypad operator enters destination number “17”. All other destination bits are “OFF”. The ENTER bit I:020/16 prevents data from being moved until the keypad operator enters a new preset for T4:16. The MOVE instruction takes the integer data in I:021 and transfers it to T4:16.PRE.

The PLC 5/15 example program could be expanded to display the timer preset along with an 8 character message that identifies each timer preset. The following rungs could be added for each timer.

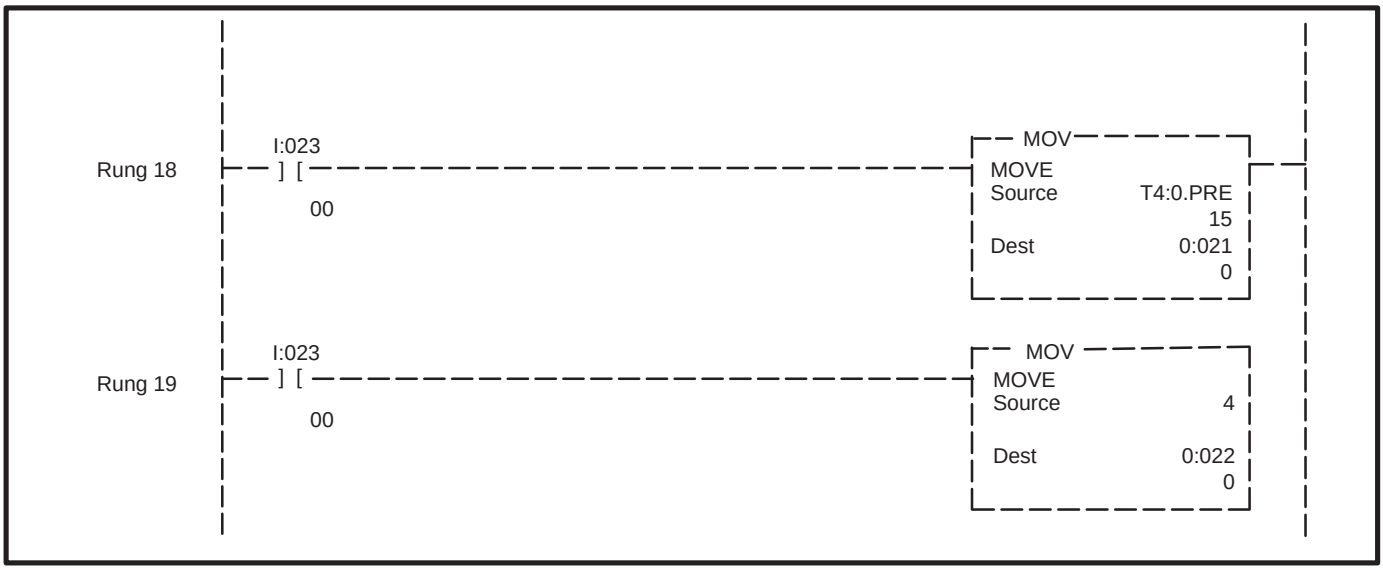

Rung 18:
When destination bit I:023/00 is “ON” the T4:0.PRE value is displayed on the right hand side of the keypad module.

Rung 19:
When destination bit I:023/00 is “ON” the constant “4” is moved to the SMD word, triggering message number 4. “T4:0.PRE=” will be displayed on the left hand side, identifying the data in the right hand side.

Artisan Technology Group - Quality Instrumentation ... Guaranteed | (888) 88-SOURCE | www.artisantg.com

Using PLC-5 Controllers and a Sub I/O Scanner with Keypad Modules

A 1771–SN, Sub I/O scanner may be used with a PLC–5 family processor when the application requires more remote devices than that processor can accommodate. The sub I/O scanner module may be used to communicate to as many as 16 additional remote I/O devices.

The 1771–SN Sub I/O scanner may be located in the same rack as the PLC–5 (the local rack), or in any space of the remote racks supported by the processor. The PLC–5 communicates to the sub I/O scanner using block transfer read and write instructions, this method is called Bidirectional Block Transfers.

The block transfer read instruction, reads input data from the sub I/O scanner and transfers that data to integer files in the PLC. The block transfer write instruction, writes output data to files of the PLC, then transfers that data to the sub I/O scanner. What this means is that instead of input addresses starting with “I:” and output addresses starting with “O:”, both input and output addresses will begin with “N7 or greater:”. The rest of the input addresses will depend on the specific integer file that is designated as the “DATA FILE” in the block transfer read instruction. The rest of the output addresses will depend on the specific integer file that is designated as the “DATA FILE” in the block transfer write instruction.

The Keypad Module must have Bank #1 DIP Switch settings set for PLC–2 even though a 1771–SN scanner is used with a PLC–5. Refer to Page 5–2 for additional information.

Artisan Technology Group - Quality Instrumentation ... Guaranteed | (888) 88-SOURCE | www.artisantg.com

The ladder diagram in Figure 7.6 is a simple programming example showing Bidirectional Block Transfers between a sub I/O scanner and PLC–5.

Figure 7.6
PLC–5 Block Transfer

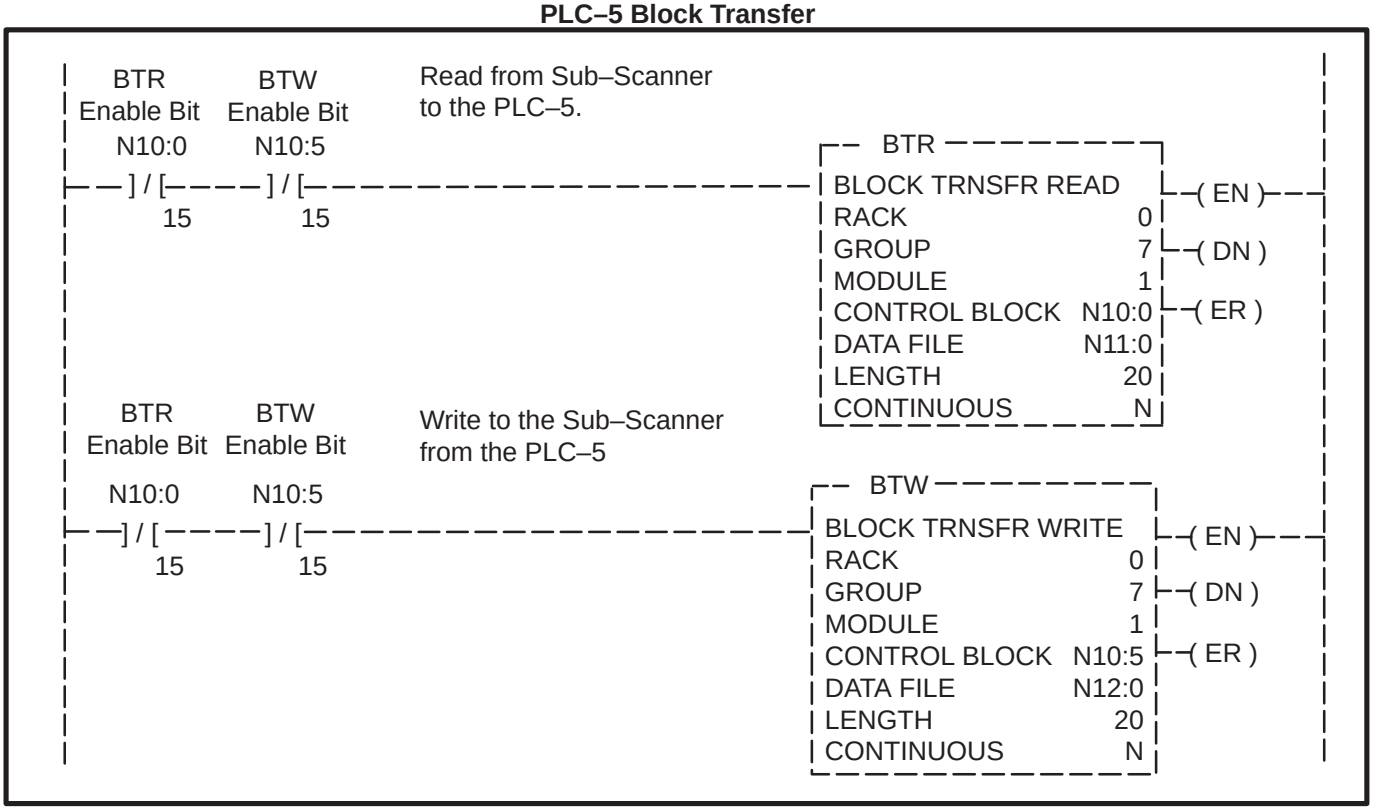

The block transfer read and write instructions have certain parameters that you must enter. The following is a description of these instruction parameters to help you configure your block transfer instructions.

Instruction Parameters:

- RACK refers to which I/O rack number that the sub I/O scanner is located in. The number entered here will range from 0–3 if a PLC–5/15 is being used or 0–7 if a PLC–5/25 is being used.
- GROUP refers to which I/O group of the rack, that the sub I/O scanner is located in. The number entered here will range from 0–7.
- MODULE refers to which slot within the I/O group that the sub I/O scanner is located. The number entered here will be 0 or 1.
- CONTROL BLOCK is a 5–word integer file that controls the instruction's operation. Enter this integer file address without the # symbol: for example, N7: (any integer file) not #N7:. This is not the file type for control elements, R.
- DATA FILE is the address of the block–transfer file that will be written to, or read from, and it is from this file that the processor transfers data. Enter this file address **without** the # symbol. The status of the inputs or outputs of the remote I/O devices connected to the sub I/O scanner, will

Artisan Technology Group - Quality Instrumentation ... Guaranteed | (888) 88-SOURCE | www.artisantg.com

be reflected in this file. Therefore, all your input or output addresses for these remote devices will be elements of this file.

- LENGTH is the number of words the sub I/O scanner is transferring. The number entered will be equal to 8 words (reserved for sub I/O scanner utility functions) plus 2 words for each 1/4 rack of I/O the sub I/O scanner will be communicating with. For example: If you are connecting 4 RediPANELs configured for 1/4 rack, plus 1 RediPANEL configured for 1/2 rack to the sub I/O scanner, the number you would enter here would be 20.

  8 words (for sub I/O scanner utility functions)
  +8 words (2 words for each 1/4 rack RediPANEL)
  +4 words (for the one, 1/2 rack RediPANEL)
  =20 words

- CONTINUOUS determines the mode of instruction execution. Enter N, for no.

It is important to note, that all block transfer read and write instructions should be programmed in the first rungs of the program. Each instruction may transfer a maximum of 64 words at a time between the processor and the sub I/O scanner. (8 words for the sub I/O scanner utility functions and 8 words for each of the 7 logical racks of RediPANELs the sub I/O scanner is capable of communicating to.)

Programming Example

In this programming example, we are using block transfer read and write instructions to communicate between a PLC–5/15 and sub I/O scanner. The sub I/O scanner is located in slot 1, module group 7 of the local I/O rack. The sub I/O scanner has a keypad module, configured for 1/2 rack, connected to it.

Artisan Technology Group - Quality Instrumentation ... Guaranteed | (888) 88-SOURCE | www.artisantg.com

Figure 7.7
PLC–5/15 and Sub I/O Scanner Programming Example

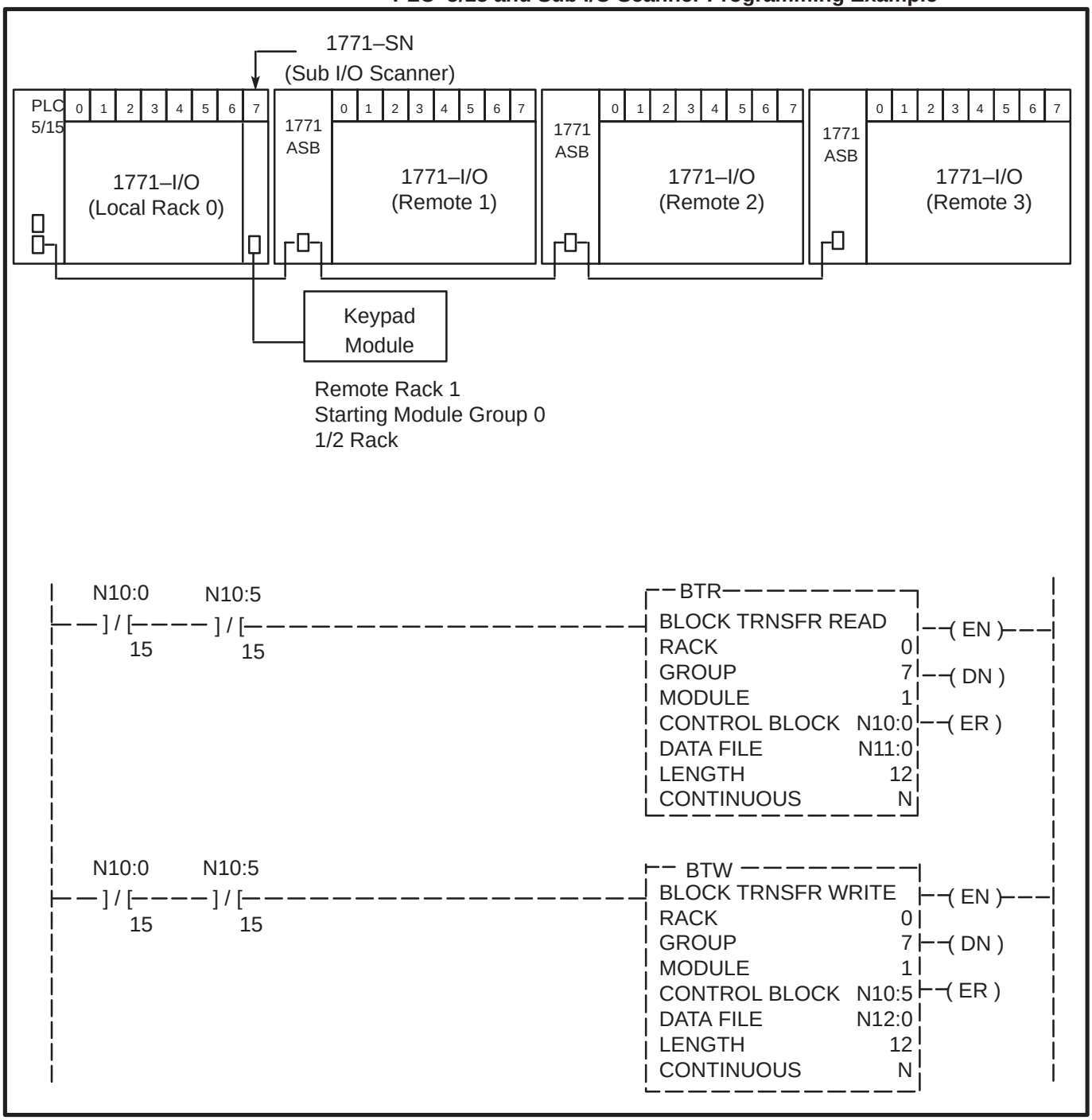

Artisan Technology Group - Quality Instrumentation ... Guaranteed | (888) 88-SOURCE | www.artisantg.com

In the programming example shown in Figure 7.7, you'll notice the length has been set for (12), 8 words for the block transfer utility functions and 4 words for the Keypad Modules configured for 1/2 rack. The DATA FILE for the block transfer read instruction begins at N11:0. This means the addresses in the ladder logic, for the keypad input, will begin with N11:8/00. The DATA FILE for the block transfer write instruction begins at N12:0. This means the addresses in the ladder logic, for the keypad output, will begin with N12:8/00.

Programming Example

Figure 7.8 shows an example of what the instruction addresses for the RediPANEL Keypad Module would look like in the ladder logic, given the configuration shown in Figure 7.7. The first 8 words of files N11: and N12: have been reserved for the sub I/O scanner utility words.

Figure 7.8
PLC–5/15 and Sub–Scanner Ladder Logic Example

RediPANEL
Address Profile

Input Addresses	Output Addresses
N11:00/00 - N11:07/15 (8 Words) Reserved for Sub–Scanner Utility Functions.	N12:00/00 - N12:07/15 (8 Words) Reserved for Sub–Scanner Utility Functions.
N11:08/00 - N11:11/15 (4 Words)	N12:08/00 - N12:11/15 (4 Words)
1/2 rack reserved for input image table of the keypad module, module groups 0–3	1/2 rack reserved for output image table of the keypad module, module group 0–3

Keypad Module
F1 Push Button

Moves T4:0 preset to
keypad data display

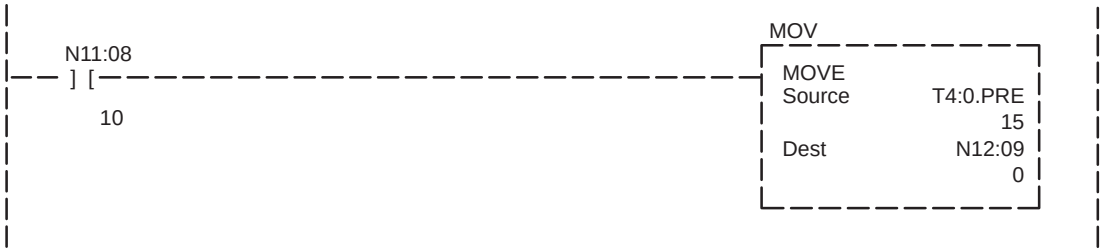

Artisan Technology Group - Quality Instrumentation ... Guaranteed | (888) 88-SOURCE | www.artisantg.com

PLC-2 Programming Example

The following pages contain a PLC–2 example program which utilizes many of the functions of the Keypad Module. Keep in mind that this program is simply an example - your applications may or may not fit this structure.

The programming examples cover the following topics:

- Part A: Examining accumulated values of a counter
- Part B: Changing and examining preset values of a counter
- Part C: Displaying a 16–character message
- Part D: Displaying a message and variable data simultaneously
- Part E: Destination bits for retrieval of data

To operate the following program, set the Keypad Module for:

BCD Mode

Rack 1

$^{3}/_{4}$ Rack Configuration

I/O Group = 0

Baud Rate = 57.6K

Enable:

Destination Bits

Stored Message

Split Display

Disable:

Handshake

Keyswitch

Last State

XT–keyboard

Note: A table has been constructed to assign numeric values to word locations.

Word 477=0

Word 511=1 - ①

Word 512=2 - ①

Word 513=3 - ①

Word 510=500 - Destination Bits

① These numbers are used to call up stored messages from EEPROM in the Keypad Module.

Artisan Technology Group - Quality Instrumentation ... Guaranteed | (888) 88-SOURCE | www.artisantg.com

PLC–2 Programming Example

The example program below is explained on the following pages. We present the program here (and on the next page) in its entirety for your reference. Note – Block transfer is only required when using the 1771–SN sub I/Oscanner Block transfers allow communications between the sub–scanner and PLC. Block transfers are not required for any other type of scanner module.

```
   !                                                                                                  !
A  +------------------------------------------------------------+ BLOCK XFER READ  +--- (EN) --- 011 +
   !                                                           | DATA ADDR:    0030 |        17      !
   !                                                           | MODULE ADDR:  111  |                !
   !                                                           | BLOCK LENGTH  14   |                !
   !                                                           | FILE:   0200–0215  |   --- (DN) --- 111 +
   !                                                           +--------------------+        17      !
   !                                                                                                  !
B  +------------------------------------------------------------+ BLOCK XFER WRITE +--- (EN) --- 011 +
   !                                                           | DATA ADDR:    0031 |        16      !
   !                                                           | MODULE ADDR:  111  |                !
   !                                                           | BLOCK LENGTH  14   |                !
   !                                                           | FILE:   0400–0415  |   --- (DN) --- 111 +
   !                                                           +--------------------+        16      !
   !    111                                                                                           !
C  +-][------------------------------------------------------+ FILE TO FILE MOVE +--- (EN) --- 0033 +
   !     17                                                    | COUNTER ADDR: 0031 |        17      !
   !                                                           | POSITION:     014  |                !
   !                                                           | FILE LENGTH   014  |                !
   !                                                           | FILE A:  0200–0215 |   --- (DN) --- 0033 !
   !                                                           | FILE: B: 0300–0315 |        15      !
   !                                                           | RATE PER SCAN: 014 |                !
   !                                                           +--------------------+                !
   !    310                                                                                           !
1  +-][------------------------------------------------------------------------------------ ( CTU ) --- 0037 !
   !     10                                                                          PR 500            !
   !    0037                                                                         AC 214            !
2  +-[ G]------------------------------------------------------------------------------------ ( PUT ) --- 0500 !
   !     214                                                                                           214 !
   !    477                                                                                           !
3  +-][------------------------------------------------------------------------------------ ( CTU ) --- 500 !
   !     00                                                                                            15  !
   !    477                                                                                           !
4  +-][------------------------------------------------------------------------------------ (     ) --- 500 !
   !     00                                                                                            17  !
   !    310      0500                                                                                  !
5  +-][---[ G]------------------------------------------------------------------------------ ( PUT ) --- 0412 !
   !     10       214                                                                                  214 !
   !   310       0513                                                                                  !
6  +-][---[ G]------------------------------------------------------------------------------ ( PUT ) --- 0413 !
       10        003                                                                                  003
```


Artisan Technology Group - Quality Instrumentation ... Guaranteed | (888) 88-SOURCE | www.artisantg.com

```
                                                                                                                  540
 7  +-][310                                                                                                  ( L )-+
       11                                                                                                        00   !
 !                                                                                                                    !
 !     540          0137                                                                                          0412 !
 8  +-][---[ G]-------------------------------------------------------------------------------------------( CTU )-+
 !     00           500                                                                                           214  !
 !                                                                                                   003              !
 !     540          0515                                                                                          0413 !
 9  +-][---[ G]-------------------------------------------------------------------------------------------( PUT )-+
 !     00           002                                                                                           003  !
 !     540      310          0312                                                                                 0137 !
10  +-][---][ ---[ G]-------------------------------------------------------------------------------------( PUT )-+
 !     00       16                                                                                                000  !
 !     310          0137                                                                                          0412 !
11  +-][---[ G]-------------------------------------------------------------------------------------------( PUT )-+
 !     16           500                                                                                           214  !
 !     540      310                                                                                               540  !
12  +-][---][-------------------------------------------------------------------------------------------( U )-+
 !     00       16                                                                                                00   !
 !     310          511                                                                                           0413 !
13  +-][---[ G]-------------------------------------------------------------------------------------------( PUT )-+
 !     15           001                                                                                           003  !
 !                                                                                                                    !
 !     310                                                                                                       410  !
14  +-][-------------------------------------------------------------------------------------------( L )-+
       15                                                                                                        16   !
 !                                                                                                                    !
 !     310                                                                                                       410  !
15  +-][-------------------------------------------------------------------------------------------( U )-+
       14                                                                                                        16   !
 !                                                                                                                    !
 !     310          0477                                                                                          0413 !
16  +-][---[ G]-------------------------------------------------------------------------------------------( PUT )-+
 !     14           000                                                                                           003  !
 !     310          0477                                                                                          0412 !
17  +-][---[ G]-------------------------------------------------------------------------------------------( PUT )-+
       14           00                                                                                            214

                                                                                                                  16

                                END 01107
```

The explanation of the example program begins on the next page.

Artisan Technology Group - Quality Instrumentation ... Guaranteed | (888) 88-SOURCE | www.artisantg.com

Program Set-up

Rungs A, B and C set the program up:

```
                                                                                  011
A  +-----------------------------------------------+ BLOCK XFER READ  +-- (EN) --+
                                                  | DATA ADDR:     0030 |      17
                                                  | MODULE ADDR:   111  |
                                                  | BLOCK LENGTH   14   |
                                                  | FILE:     0200–0215 |      111
                                                  +-------------------+-- (DN) --+
                                                                                  17
                                                                                  011
B  +-----------------------------------------------+ BLOCK XFER WRITE +-- (EN) --+
                                                  | DATA ADDR:     0031 |      16
                                                  | MODULE ADDR:   111  |
                                                  | BLOCK LENGTH   14   |
                                                  | FILE:     0400–0415 |      111
                                                  +-------------------+-- (DN) --+
                                                                                  16
   111                                                                            0033
C  +-][-----------------------------------------+ FILE TO FILE MOVE +-- (EN) --+
    17                                            | COUNTER ADDR:  0031 |      17
                                                  | POSITION:      014  |
                                                  | FILE LENGTH    014  |      0033
                                                  | FILE A:   0200–0215 |-- (DN) --
                                                  | FILE: B:  0300–0315 |      15
                                                  | RATE PER SCAN: 014  |
                                                  +-------------------+
```

The block transfers and the file–to–file move allow for communications from the sub–scanner to the programmable controller. The block length of 14 allows for 8 utility words needed by the sub–scanner and 6 words (or $^{3}/_{4}$ rack) for the Keypad Module. The resulting input/output image tables in Figure 7.9, on the following page, go along with this programming example for Keypad Module.

Artisan Technology Group - Quality Instrumentation ... Guaranteed | (888) 88-SOURCE | www.artisantg.com

Figure 7.9
I/O Table for Sample Program: BCD Mode, $^3/_4$ Rack

Input Image Table

17	16	15	14	13	12	11	10	7	6	5	4	3	2	1	0	
H	EN	F6	F5	F4	F3	F2	F1	S	Dec. Pos.			—	—	—	—	Word 310
BCD1 (MSD)				BCD2				BCD3				BCD4				Word 311
BCD5				BCD6				BCD7				BCD8 (LSD)				Word 312
Destination																Word 313
Destination Bits																Word 314
Destination Bits																Word 315

Output Image Table

17	16	15	14	13	12	11	10	7	6	5	4	3	2	1	0	
H	DMM	L6	L5	L4	L3	L2	L1	S	Dec. Pos.			DC	SDP			Word 410
BCD1 (MSD)				BCD2				BCD3				BCD4				Word 411
BCD5				BCD6				BCD7				BCD8 (LSD)				Word 412
Stored Message Display Number (SMD)																Word 413
Two Alphanumeric Characters																Word 414
Two Alphanumeric Characters																Word 415

The symbols and abbreviations for the bits in these tables are explained on pages 7–25 and 7–26.

Artisan Technology Group - Quality Instrumentation ... Guaranteed | (888) 88-SOURCE | www.artisantg.com

Part A: Changing and Examining Accumulated Value of Counter for PLC-2

Rungs 1–5 show a procedure for monitoring the accumulated value of counter 037 using the Keypad Module:

```
   !    310                                                          0037
1  +-][-----------------------------------------------------------( CTU )-!
   !     10                                                PR 500          !
   !    0037                                               AC 214   0500   !
2  +-[ G]-------------------------------------------------------( PUT )-!
   !     063                                                         063   !
   !    477                                                          500   !
3  +-][-----------------------------------------------------------( CTU )-!
   !     00                                                           15   !
   !    477                                                          500   !
4  +-][-----------------------------------------------------------(     )-!
   !     00                                                           17   !
   !    310      0500                                               0412   !
5  +-][---[ G]--------------------------------------------------( PUT )-!
   !     10       063                                                 063   !
   !                                                                       !
   !                                                                       !
```

Rung 1:
The input signal, function key F1, is programmed to increment counter 037.

Rung 2:
The counter value cannot be sent directly to the output image table of the Keypad Module because the counter is a 3–digit BCD and word 412 of the keypad output table is designed for a 4–digit BCD value. So, we must first put the counter value in a buffer location and make sure the upper 4 bits of counter 037 are zero before being sent to Keypad Module output image table.

Rung 3:
These rungs guarantee that no number will appear

Rung 4:
in the fourth digit of the Keypad Module. Input signal 477 on both rungs will put a zero into the done bit (500/15) and CTU enable (500/17) bit of the buffer (word 500).

Rung 5:
When function key F1 is depressed, the accumulated value of the counter will be displayed on the right hand side of the Keypad Module.

Artisan Technology Group - Quality Instrumentation ... Guaranteed | (888) 88-SOURCE | www.artisantg.com

Part B: Changing and Examining preset Value of Counter for PLC-2

Rungs 7–12 show a programming procedure that will allow you to change the preset values of the counter that was being monitored in rungs 1–5. (Rung 6 and Rung 9 are for message recording, and will be explained later).

```
        310                                                                    540
 7  +-][-----------------------------------------------------------------( L  )-+
        11                                                                    00
    !                                                                          !
    !   540        0137                                                      0412   !
 8  +-][---[ G]-------------------------------------------------------------( PUT )-+
    !   00         500                                                       500
    !   540      310        0312                                             0137
10  +-][---][ ---[ G]-------------------------------------------------------( PUT )-+
    !   00       16         600                                              600    !
    !   310          0137                                                     0412   !
11  +-][---[ G]-------------------------------------------------------------( PUT )-+
    !   16           600                                                      600
    !                                                                          !
    !   540      310                                                          540    !
12  +-][---][-----------------------------------------------------------------( U  )-+
        00       16                                                           00
```

Rung 7:
The input signal, function key F2 is being latched on.

Rung 8:
The input signal (540/00) is retrieving the preset (137) of counter 037 and displaying it on the Keypad Module (output 412).

Rung 10:
The existing preset value is now being displayed on the Keypad Module. To enter a new preset, depress the appropriate number keys followed by the ENTER key (310/16).

Rung 11:
This rung verifies what was entered to show us the new preset. When the ENTER key was depressed (310/16), the new preset (137) was then displayed on the Keypad Module (412).

Rung 12:
Output word 540 is unlatched when ENTER key is pressed.

Artisan Technology Group - Quality Instrumentation ... Guaranteed | (888) 88-SOURCE | www.artisantg.com

Part C: Displaying a 16–Character Message for PLC–2

Rungs 13 - 17 retrieve and display a message:

```
          310       0511                                                                    0413
13  +-][---[ G]-----------------------------------------------------------------------( PUT )-+
    !     15        001                                                                     001   !
    !                                                                                             !
          310                                                                             410     !
14  +-][-------------------------------------------------------------------------------( L )-+
    !     15                                                                                16    !
```

Rung 13:
When function key F6 is depressed, a number is retrieved from word 511 and put in the output image table location (413) reserved for a stored message number. (Refer to output image table.) Shown above - message number “1” is being moved to word 413.

Rung 14:
In order for the message to continually be displayed, the Display Message bit (410/16) of the output image table must be on. Rung 14 latches this bit on.

```
    !                                                                                         410   !
          310                                                                                       !
15  +-][-------------------------------------------------------------------------------( U )-+
    !     14                                                                                16    !
    !                                                                                             !
    !                                                                                         0413  !
          310       0477                                                                            !
16  +-][---[ G]-----------------------------------------------------------------------( PUT )-+
    !     14        000                                                                     003   !
    !                                                                                             !
    !                                                                                         0412  !
          310       0477                                                                            !
17  +-][---[ G]-----------------------------------------------------------------------( PUT )-+
    !     14        00                                                                      00    !
```

Rung 15:
When function key F5 is depressed the display

Rung 16:
message bit is released. Rung 16 and 17 put zeros

Rung 17:
in the data table words 412 and 413 so that the display is cleared when F5 is depressed.

Artisan Technology Group - Quality Instrumentation ... Guaranteed | (888) 88-SOURCE | www.artisantg.com

Part D: Displaying Message and Variable Data Simultaneously for PLC-2

In Part A and B we learned how to examine information from the PLC by using the Keypad. In order to have an 8–character message work with the variable data a message number must be put into the stored message word of the output image table at the same time the variables appear on the keypad display. Therefore, the following rung is all that is required for a message to be displayed:

```
     !                                                                                  0413   !
     +−][−−−[ G]−−−
```

Symbols and Abbreviations for I/O Image Tables

The figures on the following pages show the input and output tables for the Keypad Module.

The following symbols and abbreviations appear in the input and output tables. Refer to this list for identifying specific bits in the tables:

"-" Represents a "0". No function is assigned for this bit location.

H **H**andshake bit. Refer to page 7–28 for more information.

EN **EN**ter bit. This bit toggles when the ENTER key of the keypad module is depressed.

F1-F6
Function key bits. These bits are input signals from the function keys. When one of the function keys is depressed the corresponding bit will toggle.

L1-L6
LEDs located on each function key. These bits are output signals that feedback to acknowledge a function key was depressed. They can be used like pilot lights. When bit=1 the LED is ON, when bit=0 the LED is off.

DM **D**isplay **M**essage. This bit allows a 16–character stored message to be displayed or ASCII data (No PLC numeric data), when DM=1. Refer to Chapters 6 & 7 for more information.

SMD
Stored **M**essage **D**isplay number. This is the output word location for the message number which is being displayed on the Keypad. When SMD=0, then ASCII data will be displayed.

ATTENTION: Any SMD value greater than 120 will cause a lock–up condition. To protect against this condition, a boundary check should be used in the PLC program to help insure a valid MSG # is sent.

Artisan Technology Group - Quality Instrumentation ... Guaranteed | (888) 88-SOURCE | www.artisantg.com

Decimal Point Control

Dec. Pos.

DECimal **POS**ition. The decimal position field holds a binary value (1–7) that is the number of positions to the right of the decimal point:

Input Image table – Indicates the number of places to the right of the decimal point as numeric data is being entered.

Output Image table – Controls the number of places to the right of the decimal point when the Keypad Module is displaying variable data.

DC Decimal point **C**ontrol. Decimal point control enables SDP. See Table 7.A.

SDP

Scratchpad **D**ecimal point **P**osition. The binary value of these bits will control the number of places (1–7) to the right of the decimal point as numeric data is being entered. When this value is 0, the decimal point button in the keypad module will be active.

DC Decimal Point Enable Bit (Output Image)	SDP Scratchpad Decimal Point Position (Output Image)	Decimal Point Mode
1	1 to 7	Fixed
1	0	Variable
0	don't care	Disabled

Artisan Technology Group - Quality Instrumentation ... Guaranteed | (888) 88-SOURCE | www.artisantg.com

Figure 7.10
Example of Decimal Point Control

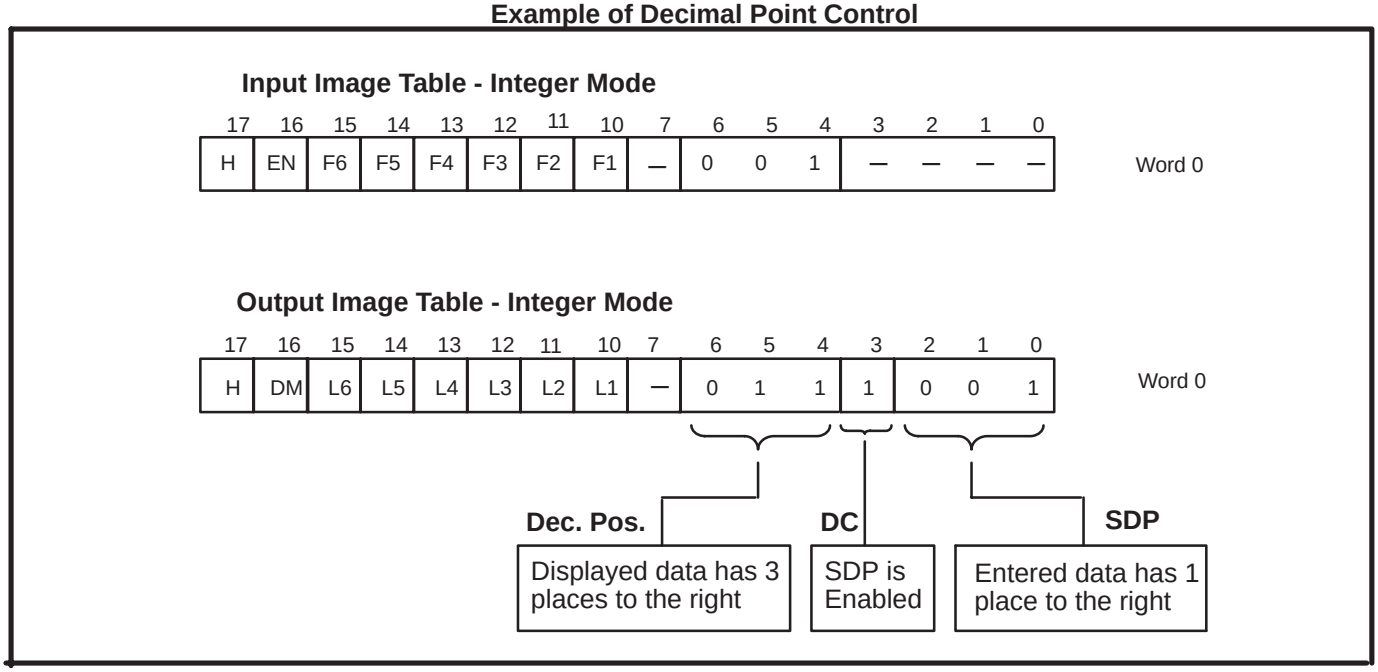

Artisan Technology Group - Quality Instrumentation ... Guaranteed | (888) 88-SOURCE | www.artisantg.com

When to Use the Handshake Mode

RediPANEL Modules have a standard TIMED feature that holds all push button depressions for a minimum of 100 milliseconds to allow the PLC controller to read the depression during its scan cycle. No special programming is needed for this function. Most system configurations can use this feature to help insure data capture of a push button depression.

As a general guideline, handshaking is not required. The few cases where it is required would be:

1. Very lengthy scan times. Lengthy scan times can occur when the block transfer instruction is used numerous times in the ladder program. Lengthy scan times can also occur when the ladder program is very large.

2. When the remote I/O link is approaching its physical limitation of 16 devices (RediPANEL push button modules, keypad modules, remote I/O racks).

To select the Handshake feature, enable (set ON) the module's DIP switch 7 on switch bank #2. Setting this switch OFF, gives you the TIMED feature, which is the default setting. Chapter 5 discusses switch settings for mode configuration. Figure 5.5 refers to Handshake enable and disable settings.

To use the Handshake feature, the PLC program must have a rung that accepts the handshake bit and allows communication to continue. Refer to Figure 7.11 for an example of this rung. If you have selected the Handshake feature, then your PLC program must contain this rung, or the module will not operate.

Figure 7.11
Ladder Logic Handshake Rung

Artisan Technology Group - Quality Instrumentation ... Guaranteed | (888) 88-SOURCE | www.artisantg.com

With the handshake feature enabled and the handshake rung in the user's program, the RediPANEL module holds all function key input signals high for a minimum of one complete PLC program scan. It keeps the signal(s) high for one complete cycle of the handshake input bit. The handshake input and output signals will continuously toggle independent of any function key closures. This ensures that the handshake function is operational even if no function keys have been pressed. The timing diagrams (Figure 7.12) further explain how this is accomplished.

IMPORTANT: The following diagrams are used for illustrative purposes only and are not intended to be precise timing diagrams. Exact timing diagrams vary from application to application and are dependent upon the number of remote I/O nodes, program scan time, etc.

Figure 7.12
Handshake Timing Diagrams

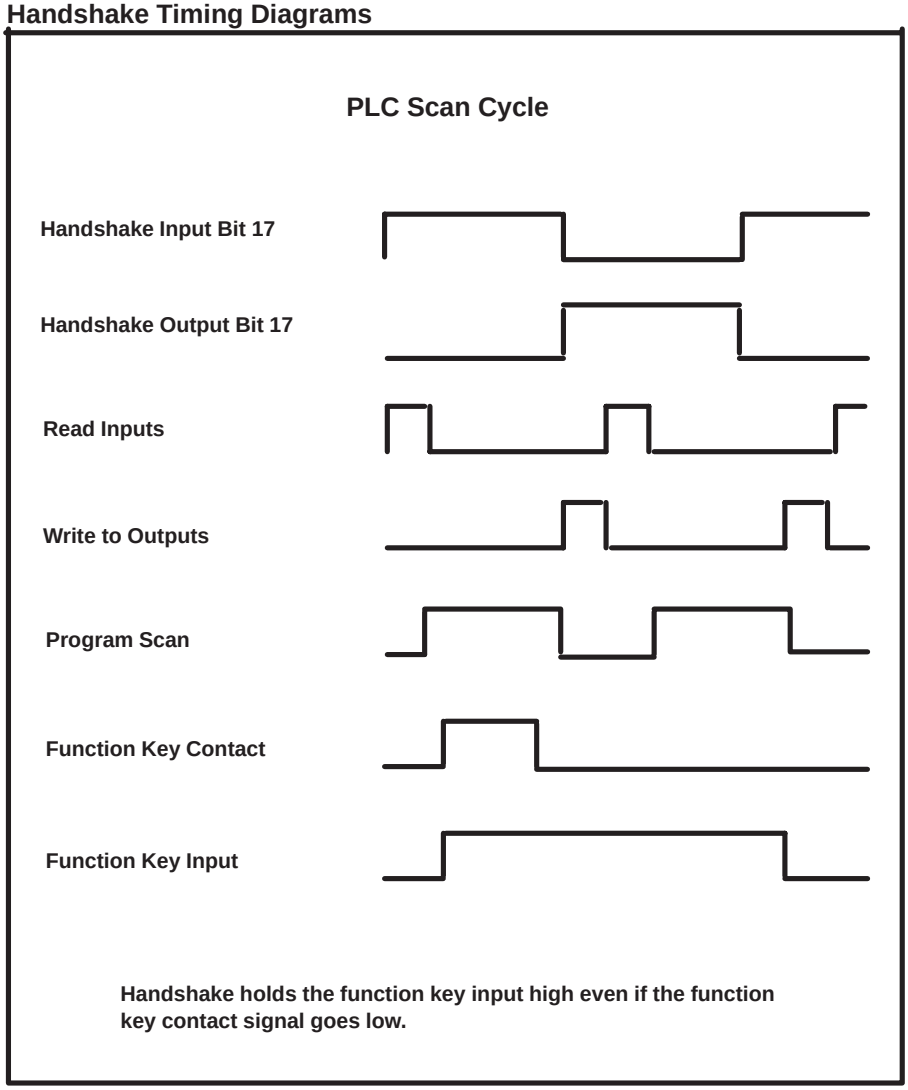

Artisan Technology Group - Quality Instrumentation ... Guaranteed | (888) 88-SOURCE | www.artisantg.com

Input and Output Image Tables

Integer Data – With Stored Message

1/2, 3/4 and Full Rack

Figure 7.13
Integer Mode, 1/2, 3/4 and Full Rack with Stored Message Display

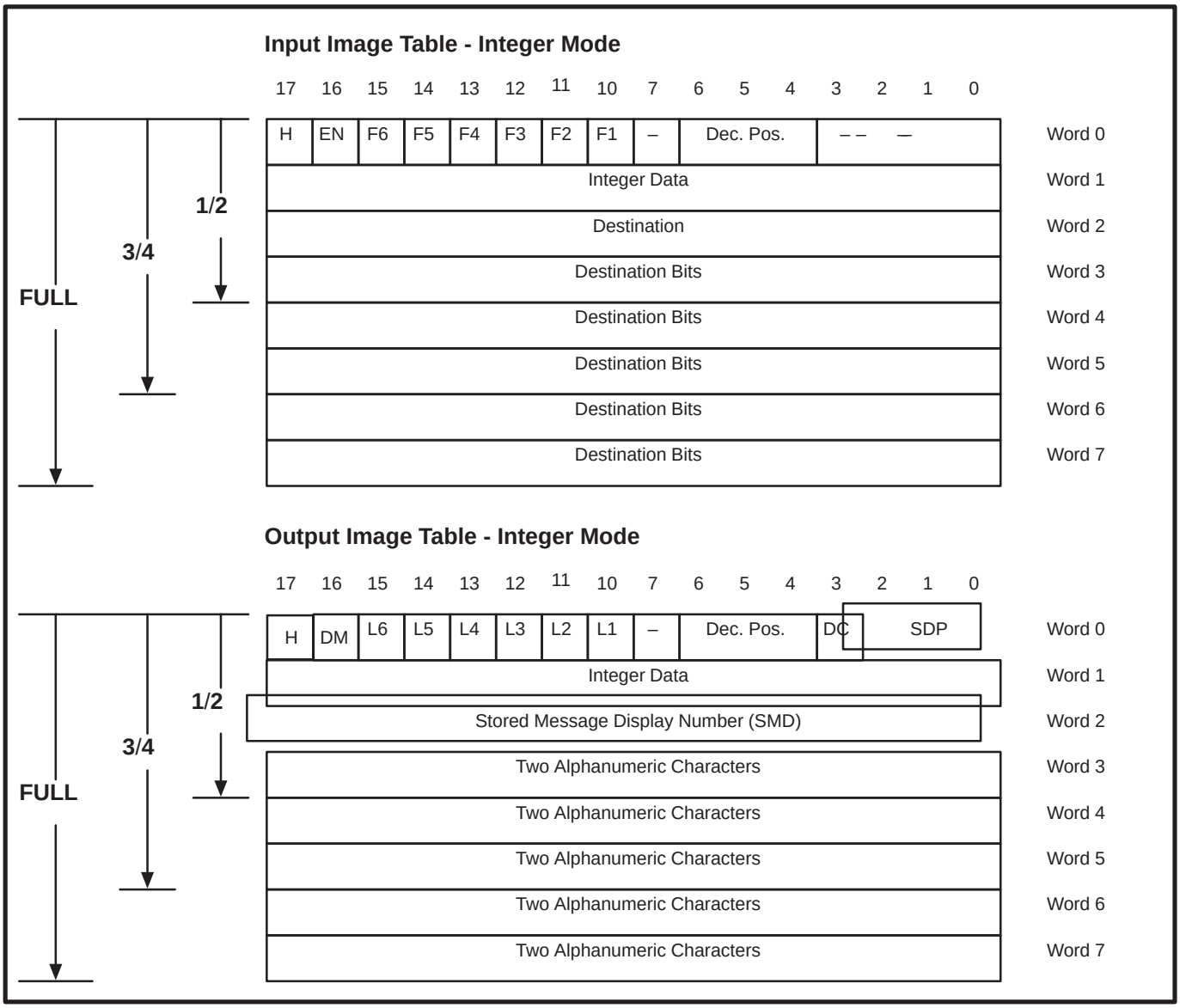

1/4 Rack Using Stored Messages

Stored message display cannot be used with 1/4 rack configurations.

Artisan Technology Group - Quality Instrumentation ... Guaranteed | (888) 88-SOURCE | www.artisantg.com

Input and Output Image Tables

BCD Data – With Stored Message

3/4 and Full Rack

Figure 7.14
BCD Mode, 3/4 and Full Rack with Stored Message Display

Input Image Table - BCD Mode

17	16	15	14	13	12	11	10	7	6	5	4	3	2	1	0	
H	EN	F6	F5	F4	F3	F2	F1	S	Dec. Pos.			–	–	–	–	Word 0
BCD1 (MSD)				BCD2				BCD3				BCD4				Word 1
BCD5				BCD6				BCD7				BCD8 (LSD)				Word 2
Destination																Word 3
Destination Bits																Word 4
Destination Bits																Word 5
Destination Bits																Word 6
Destination Bits																Word 7

FULL
3/4

Output Image Table - BCD Mode

17	16	15	14	13	12	11	10	7	6	5	4	3	2	1	0	
H	DM	L6	L5	L4	L3	L2	L1	S	Dec. Pos.			DC	SDP			Word 0
BCD1 (MSD)				BCD2				BCD3				BCD4				Word 1
BCD5				BCD6				BCD7				BCD8 (LSD)				Word 2
Stored message Display Number (SMD)																Word 3
Two Alphanumeric Characters																Word 4
Two Alphanumeric Characters																Word 5
Two Alphanumeric Characters																Word 6
Two Alphanumeric Characters																Word 7

FULL
3/4

1/4 and 1/2 Rack Using Stored Messages

Stored message display cannot be used with 1/4 and 1/2 rack BCD configurations.

Artisan Technology Group - Quality Instrumentation ... Guaranteed | (888) 88-SOURCE | www.artisantg.com

Input and Output Image Tables

Binary Data – With Stored Message

1/2, 3/4 and Full Rack

Figure 7.15
Binary Mode, 1/2, 3/4 and Full Rack with Stored Message Display

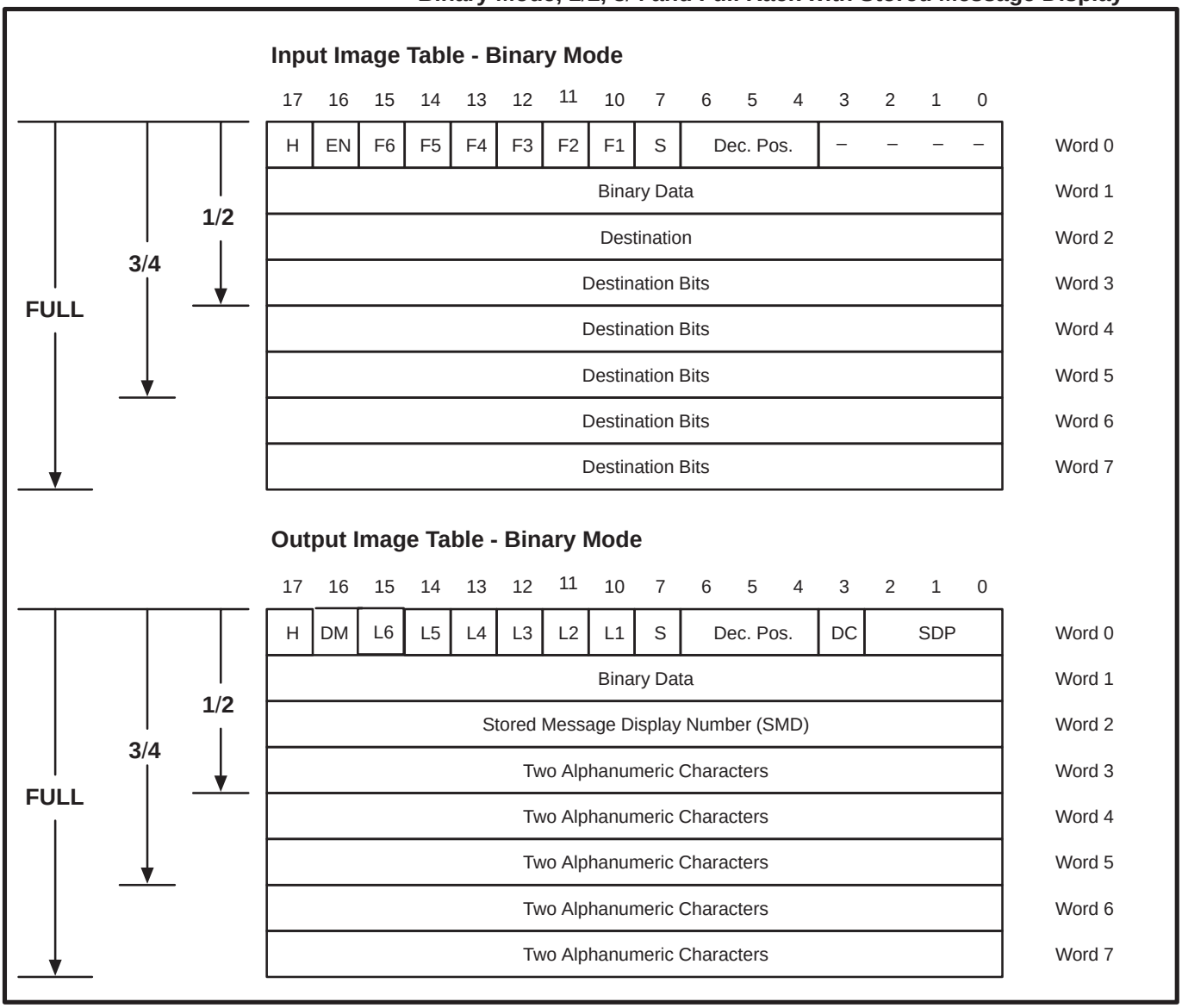

1/4 Rack Using Stored Messages

Stored message display cannot be used with 1/4 rack configurations.

Artisan Technology Group - Quality Instrumentation ... Guaranteed | (888) 88-SOURCE | www.artisantg.com

Input and Output Image Tables

Integer Data – With Stored Message

1/2, 3/4 and Full Rack

Figure 7.16
Integer Mode, 1/2, 3/4 and Full Rack

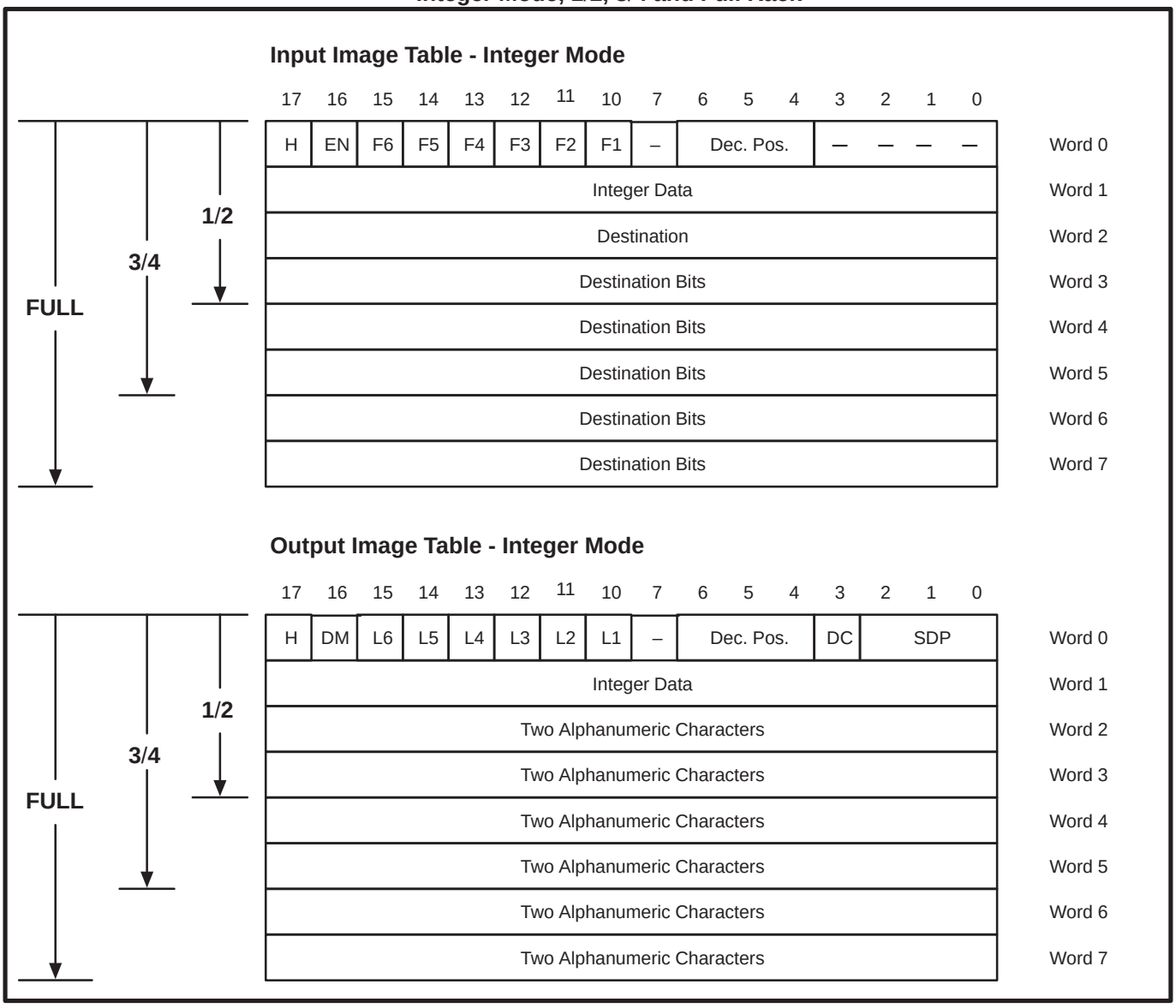

Artisan Technology Group - Quality Instrumentation ... Guaranteed | (888) 88-SOURCE | www.artisantg.com

Input and Output Image Tables

Integer Data – With Stored Message

1/4 Rack

Figure 7.17
Integer Mode, 1/4 Rack

17

Input Image Table

17	16	15	14	13	12	11	10	7	6	5	4	3	2	1	0	
H	EN	F6	F5	F4	F3	F2	F1	S	Dec. Pos.			Destination				Word 0
Integer Data																Word 1

Output Image Table

17	16	15	14	13	12	11	10	7	6	5	4	3	2	1	0	
H	DM	L6	L5	L4	L3	L2	L1	S	Dec. Pos.			DC	SDP			Word 0
Integer Data																Word 1

Artisan Technology Group - Quality Instrumentation ... Guaranteed | (888) 88-SOURCE | www.artisantg.com

Input and Output Image Tables

Binary Data – With Stored Message

3/4 and Full Rack

Figure 7.18
BCD Mode, 3/4 and Full Rack

Input Image Table - BCD Mode

17	16	15	14	13	12	11	10	7	6	5	4	3	2	1	0	
H	EN	F6	F5	F4	F3	F2	F1	S	Dec. Pos.			—	—	—	—	Word 0
BCD1 (MSD)				BCD2				BCD3				BCD4				Word 1
BCD5				BCD6				BCD7				BCD8 (LSD)				Word 2
Destination																Word 3
Destination Bits																Word 4
Destination Bits																Word 5
Destination Bits																Word 6
Destination Bits																Word 7

FULL
3/4

Output Image Table - BCD Mode

17	16	15	14	13	12	11	10	7	6	5	4	3	2	1	0	
H	DM	L6	L5	L4	L3	L2	L1	S	Dec. Pos.			DC	SDP			Word 0
BCD1 (MSD)				BCD2				BCD3				BCD4				Word 1
BCD5				BCD6				BCD7				BCD8 (LSD)				Word 2
Two Alphanumeric Characters																Word 3
Two Alphanumeric Characters																Word 4
Two Alphanumeric Characters																Word 5
Two Alphanumeric Characters																Word 6
Two Alphanumeric Characters																Word 7

FULL
3/4

ATTENTION: If an invalid BCD number is entered in the least significant digit location in the Output Image Table an error will occur. To clear this error, a valid number must be placed in the Output Image Table and power to the Keypad Module must be recycled.

Artisan Technology Group - Quality Instrumentation ... Guaranteed | (888) 88-SOURCE | www.artisantg.com

Input and Output Image Tables

Binary Data – With Stored Message

1/4 Rack

Figure 7.19
BCD Mode, 1/4 Rack

Input Image Table

17	16	15	14	13	12	11	10	7	6	5	4	3	2	1	0	
H	EN	F6	F5	F4	F3	F2	F1	BCD1 (MSD)				BCD2				Word 0
BCD3				BCD4				BCD5				BCD6 (LSD)				Word 1

Output Image Table

17	16	15	14	13	12	11	10	7	6	5	4	3	2	1	0	
H	DM	L6	L5	L4	L3	L2	L1	BCD1 (MSD)				BCD2				Word 0
BCD3				BCD4				BCD5				BCD6 (LSD)				Word 1

1/2 Rack

Figure 7.20
BCD Mode, 1/2 Rack

Input Image Table

17	16	15	14	13	12	11	10	7	6	5	4	3	2	1	0	
H	EN	F6	F5	F4	F3	F2	F1	S	Dec. Pos.			Destination				Word 0
BCD1 (MSD)				BCD2				BCD3				BCD4				Word 1
BCD5				BCD6				BCD7				BCD8 (LSD)				Word 2
Destination Bits																Word 3

Output Image Table

17	16	15	14	13	12	11	10	7	6	5	4	3	2	1	0	
H	DM	L6	L5	L4	L3	L2	L1	S	Dec. Pos.			DC	SDP			Word 0
BCD1 (MSD)				BCD2				BCD3				BCD4				Word 1
BCD5				BCD6				BCD7				BCD8 (LSD)				Word 2
Two Alphanumeric Characters																Word 3

Artisan Technology Group - Quality Instrumentation ... Guaranteed | (888) 88-SOURCE | www.artisantg.com

Input and Output Image Tables

Binary Data – No Stored Message

1/2, 3/4 and Full Rack

Figure 7.21
Binary Mode, 1/2, 3/4 and Full Rack

Input Image Table - Binary Mode

17	16	15	14	13	12	11	10	7	6	5	4	3	2	1	0	
H	EN	F6	F5	F4	F3	F2	F1	S	Dec. Pos.			—	—	—	—	Word 0
Binary Data																Word 1
Destination																Word 2
Destination Bits																Word 3
Destination Bits																Word 4
Destination Bits																Word 5
Destination Bits																Word 6
Destination Bits																Word 7

FULL
3/4
1/2

Output Image Table - Binary Mode

17	16	15	14	13	12	11	10	7	6	5	4	3	2	1	0	
H	DM	L6	L5	L4	L3	L2	L1	S	Dec. Pos.			DC	SDP			Word 0
Binary Data																Word 1
Two Alphanumeric Characters																Word 2
Two Alphanumeric Characters																Word 3
Two Alphanumeric Characters																Word 4
Two Alphanumeric Characters																Word 5
Two Alphanumeric Characters																Word 6
Two Alphanumeric Characters																Word 7

FULL
3/4
1/2

Artisan Technology Group - Quality Instrumentation ... Guaranteed | (888) 88-SOURCE | www.artisantg.com

Input and Output Image Tables

Binary Data – No Stored Message

1/4 Rack

Figure 7.22
Binary Mode, 1/4 Rack

Input Image Table

17	16	15	14	13	12	11	10	7	6	5	4	3	2	1	0	
H	EN	F6	F5	F4	F3	F2	F1	S	Dec. Pos.			Destination				Word 0
Binary Data																Word 1

Output Image Table

17	16	15	14	13	12	11	10	7	6	5	4	3	2	1	0	
H	DM	L6	L5	L4	L3	L2	L1	S	Dec. Pos.			DC	SDP			Word 0
Binary Data																Word 1

Artisan Technology Group - Quality Instrumentation ... Guaranteed | (888) 88-SOURCE | www.artisantg.com

SLC–5/02 Programming Example

In the following example, a Bulletin 2705 RediPANEL displays stored messages. An alarm, connected to an output module, signals when communications with the RediPANEL are lost. The system consists of:

- SLC–5/02 Processor (Catalog No. 1747–L524) in slot 0
- Remote I/O Scanner (Catalog No. 1747–SN) in slot 1
- Output Module (Catalog No. 1746–OB8) in slot 2
- An alarm connected to the output module
- Bulletin 2705 RediPANEL

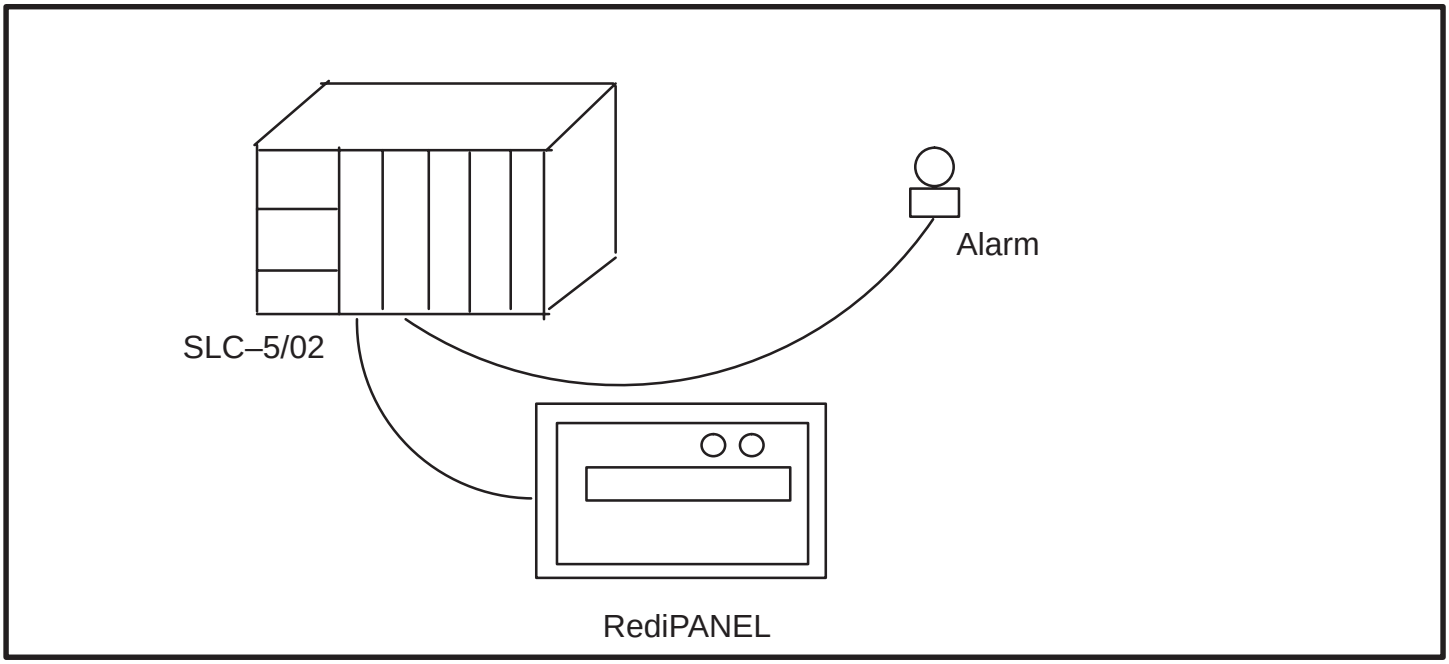

SLC–5/02 Programming Examples

As shown in G file below, the RediPANEL, is configured as a 1/2 rack device beginning at rack 0, group 0.

G FILE

	RIO Rack 3 Starting Group				RIO Rack 2 Starting Group				RIO Rack 1 Starting Group				RIO Rack 0 Starting Group			
	6	4	2	0	6	4	2	0	6	4	2	0	6	4	2	0
Device Address, Word 1	0	0	0	0	0	0	0	0	0	0	0	0	0	0	0	1
Device Size, Word 2	0	0	0	0	0	0	0	0	0	0	0	0	0	0	1	1

Artisan Technology Group - Quality Instrumentation ... Guaranteed | (888) 88-SOURCE | www.artisantg.com

The scanner input file is shown below. The output file is similar, it is addressed O:1.0 to O:1.3.

		Bit Number	15	14	13	12	11	10	9	8	7	6	5	4	3	2	1	0	Input File
Rack 0	Rack 0 Group 0	Word 1																	**I:1.0**
	Rack 0 Group 1	Word 1																	I:1.1
	Rack 0 Group 2	**Word 2**																	**I:1.2**
	Rack 0 Group **3**	Word 3																	I:1.3
	Rack 0 Group 4	**Word 4**						not	used										**I:1.4**
	Rack 0 Group 5	Word 5						not	used										I:1.5
	Rack 0 Group 6	**Word 6**						not	used										**I:1.6**
	Rack 0 Group 7	Word 7						not	used										I:1.7
Rack 1	Rack 1 Group 0	Word 1						not	used										**I:1.8**
	Rack 1 Group 1	Word 1						not	used										I:1.9
	Rack 1 Group 2	**Word 2**						not	used										**I:1.10**
	Rack 1 Group **3**	Word 3						not	used										I:1.11
	Rack 1 Group 4	**Word 4**						not	used										**I:1.12**
	Rack 1 Group 5	Word 5						not	used										I:1.13
	Rack 1 Group 6	**Word 6**						not	used										**I:1.14**
	Rack 1 Group 7	Word 7						not	used										I:1.15
Rack 2	**Rack 2 Group 0**	**Word 16**						not	used										**I:1.16**
	Rack 2 Group 1	Word 17						not	used										I:1.17
	Rack 2 Group 2	**Word 18**						not	used										**I:1.18**
	Rack 2 Group **3**	Word 19						not	used										I:1.19
	Rack 2 Group 4	**Word 20**						not	used										**I:1.20**
	Rack 2 Group 5	Word 21						not	used										I:1.21
	Rack 2 Group 6	**Word 22**						not	used										**I:1.22**
	Rack 2 Group 7	Word 23						not	used										I:1.23
Rack 3	**Rack 3 Group 0**	**Word 24**						not	used										**I:1.24**
	Rack 3 Group 1	Word 25						not	used										I:1.25
	Rack 3 Group 2	**Word 26**						not	used										**I:1.26**
	Rack 3 Group **3**	Word 27						not	used										I:1.27
	Rack 3 Group 4	**Word 28**						not	used										**I:1.28**
	Rack 3 Group 5	Word 29						not	used										I:1.29
	Rack 3 Group 6	**Word 30**						not	used										**I:1.30**
	Rack 3 Group 7	**Word 31**						not	used										I:1.31
		Bit Number (octal)	17_8	16_8	15_8	14_8	13_8	12_8	11_8	10_8	7_8	6_8	5_8	4_8	3_8	2_8	1_8	0_8	

Artisan Technology Group - Quality Instrumentation ... Guaranteed | (888) 88-SOURCE | www.artisantg.com

Address Conversion

The addresses for the Input and Output files are provided in an octal format. You must convert the bit addresses to decimal to accommodate the SLC–5/02. Refer to the following.

Bit Address																
Decimal	1	2	3	4	5	6	7	8	9	10	11	12	13	14	15	SLC–5/02
Octal	1	2	3	4	5	6	7	10	11	12	13	14	15	16	17	PLC–5

Scanner Configuration

The BAUD rate is 115.2K. DIP switch 1 should be in the OFF position, DIP switch 2 should be ON.

The G file size is set to 3 using the Speciality I/O Configuration function. The M0 and M1 file sizes are set to 32 in the Advanced Set Up function.

Since only the first four words of the input and output files contain valid information, the scanned input and output words can be set to 4. Reducing the number of scanned input and output words decreases your SLC scan time.

Artisan Technology Group - Quality Instrumentation ... Guaranteed | (888) 88-SOURCE | www.artisantg.com

Example Program

The example program is shown below. Each time a function key is pressed on the RediPANEL, its associated message is displayed. This program also monitors the scanner's Enabled Device Fault bit (M1:1.0/0). If communications are lost, an alarm is activated.

If the communications attempted and Enabled Device Fault bits are set to 1, activate the alarm.

If function key 1 is pressed (bit 8 of input word 0), T4:0 preset is moved to the display.

When a new number is entered onto the Redi-PANEL, it is moved to preset T4:0.

If function key 2 is pressed (bit 9 of input word 0), RediPANEL message #2 is trig-gered and displayed.

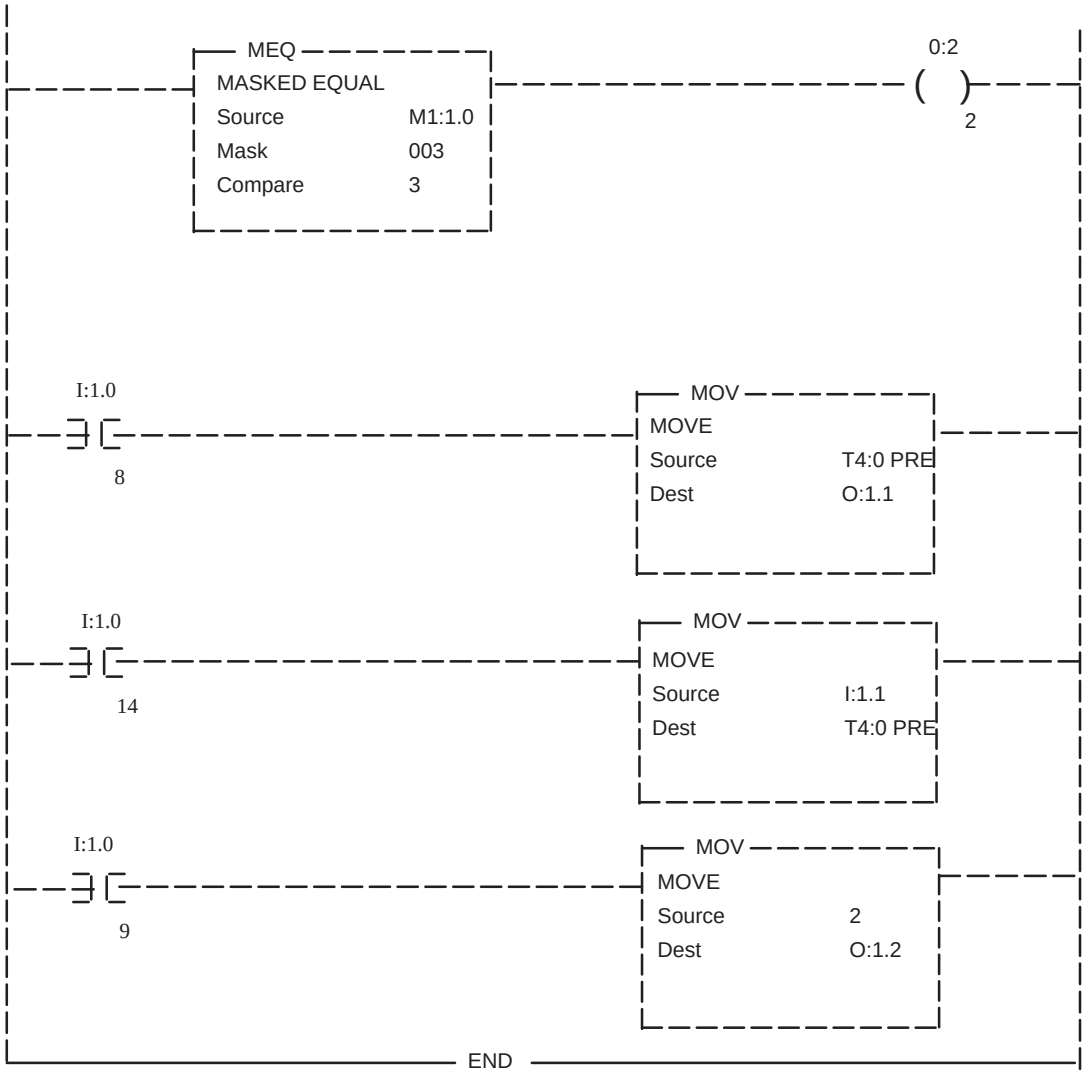

Artisan Technology Group - Quality Instrumentation ... Guaranteed | (888) 88-SOURCE | www.artisantg.com

Chapter 8

Maintenance and Troubleshooting

Chapter Objectives

This chapter describes how to use the Comm/Fault LED indicators, and explains the power–up sequence error message display, plus addresses basic troubleshooting questions on the RediPANEL Keypad Module.

Using the Comm/Fault LED Indicators

Two LED indicators are located on the right top corner of the module - a green LED labeled COMM and a red LED labeled FAULT.

The FAULT Indicator

Any software or hardware faults not related to communications are indicted by the red LED labeled FAULT. The LED can be in one of three states:

1. OFF
2. ON
3. Blinking

FAULT OFF

When FAULT indicator is OFF:

1. Module is operating correctly and no faults have been found.
2. The module is not receiving input power.

FAULT ON

When FAULT indicator is ON:

1. The module has just been powered up. The FAULT indicator momentarily is ON during the power up sequence.

2. A fault has been detected. Such a fault would be internal to the module - there is no way to clear this fault condition. Keypad Module power should be recycled.

FAULT Blinking

When FAULT indicator is blinking:

1. DIP switch fault:

- Check for valid data type.

- Make sure you have programmed the PLC for handshaking before enabling the handshake bit on the Keypad Module.

2. The calculated size and rack address combination is not valid. For example, the module is addressed for the “last module group”, group 3, of a logical rack and its size was calculated to be a half rack. The functional configurations which result in a size of two quarter racks are indicated in Chapter 5.

Artisan Technology Group - Quality Instrumentation ... Guaranteed | (888) 88-SOURCE | www.artisantg.com

The COMM Indicator

Any communication faults or errors are indicated by the green LED labeled COMM. The LED can be in one of three states:

1. OFF
2. ON
3. Blinking

COMM OFF

When COMM indicator is OFF:

1. The module is not receiving input power.
2. The module is operating correctly, but no communications is occurring at this time. Check the Remote I/O Link wiring.
3. The module is the last rack, but the DIP switch indicating this state is not in the OFF position.

COMM ON

When COMM indicator is ON:

1. The module is operating correctly and no communications faults have been found.

COMM Blinking

When COMM indicator is blinking:

The COMM indicator blinks if the PLC is in the program or test mode.

Power-Up Sequence Error Message Display

If you receive an error message during power–up, clear the error and recycle power to the module. Since error conditions may “stack up”, you may have to repeat the power–up, clear error, power–up cycle several times to clear all errors.

Basic Troubleshooting Questions

Since the Keypad Module is part of an integrated system, you must evaluate the entire system when a fault is detected. Start your troubleshooting by asking these basic questions:

- Is the rack address set properly? Refer to Chapter 5.
- Are the baud rates of the Keypad Module and the Scanner Module the same? Refer to Chapter 5.
- Is the Keypad Module the last module in a physical rack, and has it been identified as the last rack? Refer to Chapter 5.
- Is the communication connector securely plugged in at both the Keypad Module end and the Scanner Module end?

Artisan Technology Group - Quality Instrumentation ... Guaranteed | (888) 88-SOURCE | www.artisantg.com

- Have you changed the settings of any of the DIP switches? New DIP switch settings will not be acknowledged until power is recycled. Refer to Chapter 5.
- If you do not have the communications LED ON and all of your DIP switches seem correct – check the remote I/O link wiring. You may need to reverse the blue and clear wires.
- If your 120 Volt AC is intermittent be sure your 120/240 Volt AC selectable switch is set properly.

Artisan Technology Group - Quality Instrumentation ... Guaranteed | (888) 88-SOURCE | www.artisantg.com

Chapter 9

Specifications

Chapter Objectives

This chapter lists the specifications for the Bulletin 2705 Keypad Module.

Specifications

FUNCTION
Provides keypad interface for data entry and display in Remote I/O Serial Data Link.

POWER AND ENVIRONMENTAL
Power Supply: Integral power supply in each module.

Operating ranges:

Series A, B, C, D	**Series E**
90–132 Volts AC, 47–63Hz	90–265 Volts AC, 47–63Hz
180–265 Volts AC, 47–63Hz	18–30 Volts DC
18–30 Volts DC	

Input Current and Power Ratings:
24 Volts DC, 15VA, 625 milliamperes
120 Volts AC, 15VA, 125 milliamperes

Temperature Range:
Operating: 0°C to +60°C
Storage: -40°C to +85°C
Humidity: 5%-95% non-condensing
Note: Operating temperature at 0°C is based on the absence of freezing moisture or liquids.

COMMUNICATIONS
Remote I/O Serial Data Link: Communicates with the Allen–Bradley PLC family via the following scanner modules:

Scanner Cat. No.	PLC
1771–SN	PLC–2–MINI, 5/10, 5/12
1772–SD2①	PLC–2/30
1775–S4A,B,S5	PLC–3
1775–SR,SR5	PLC–3/10
Integral	PLC–5/15, 5/25
5250–RS	PLC–5/250
1747–SN	SLC–5/02

① Scanner 1772–SD2, Rev 3, or later.

Communication Media:
Allen–Bradley 1770–CD (Belden Cable 9463)

Artisan Technology Group - Quality Instrumentation ... Guaranteed | (888) 88-SOURCE | www.artisantg.com

Baud Rates:
Selectable. 230.4K baud (2500 ft), 115.2K baud (5000 ft) or 57.6K baud (10,000 ft)

Interconnect: 3–terminal plug and socket

CONSTRUCTION - NEMA Type 4X
Approximate Weight – 6 lbs (2.7 kg)

KEYBOARD COMPATIBILITY
Series A: IBM–compatible XT–style keyboard, DIN 5–pin plug.
Series B or later: IBM–compatible AT/XT–style keyboard, also.

Artisan Technology Group - Quality Instrumentation ... Guaranteed | (888) 88-SOURCE | www.artisantg.com

Appendix A

This appendix describes the error messages displayed by the Keypad Module. It also lists the display characters and their corresponding hexadecimal values as an aid.

Error Messages

The following list shows error messages and their explanations. Items with the bullet (•) in the left margin are messages that refer to hardware or software faults that cannot be corrected by programming or changing the configuration settings.

- **SYSTEM ERROR**
  A hardware failure has been detected on the Numeric Keypad Module.

- **EPROM CRC ERROR**
  This error indicates that the power up diagnostics have detected a CRC error while testing the EPROM memory of the Numeric Keypad Node Module.

- **INTERNAL RAM ERR**
  This error indicates that the power up diagnostics have detected an error in the RAM contained on the module's CPU processor.

- **EXTERNAL RAM ERROR**
  This error indicates that the power up diagnostics have detected an error in the RAM that is external to the module's CPU processor.

- **INT/TIMER1 ERROR**
  This error indicates that the power up diagnostics have detected an error with the interrupt/timer circuitry.

DATA TYPE ERROR
This error indicates that the data type set up is incompatible with the other DIP switch selections.

RACK CONFIG ERR
This error indicates a rack configuration error, i.e. (address switches, data type, SMD enabled). This is caused by incorrect setting of DIP switches on the module.

COMM SETUP ERR
This error indicates that there was an error during the setup of communications.

COMM START ERROR
This error indicates that an error was detected when the Numeric Keypad Module attempted to start communications.

Artisan Technology Group - Quality Instrumentation ... Guaranteed | (888) 88-SOURCE | www.artisantg.com

OVERFLOW
This error indicates that the user attempted to enter a number that was larger than what the module's configuration could handle.

PLC SENT NON–BCD
This error indicates that the PLC sent a non–BCD digit when one was expected. This is generally a programming error on the PLC.

EEPROM CRC ERROR
This error indicates that the power up diagnostics detected a CRC error on the EEPROM used for the stored messages. This error can be eliminated by entering a Control E and responding 'Y' to the ERROR FIX? prompt when it the Message Editor. It also is corrected by editing a message.

Note: Fixing the error does not mean that the cause of the error has been corrected.

MESSAGE ERROR
This error message is displayed whenever an invalid message number is called up for edit.

BAD MSG NUMBER This error is displayed when the PLC attempts to display a message that cannot be entered in the EEPROM. i.e., a message greater than 120.

- **WATCHDOG FAILURE** This error indicates that the power up diagnostics detected an error with the watchdog circuitry.

Artisan Technology Group - Quality Instrumentation ... Guaranteed | (888) 88-SOURCE | www.artisantg.com

Display Characters

Figure A.1 shows the 14–segment character set for the module display. The numbers next to each figure are the hexadecimal values for the characters.

Figure A.1
14–Segment Display Characters

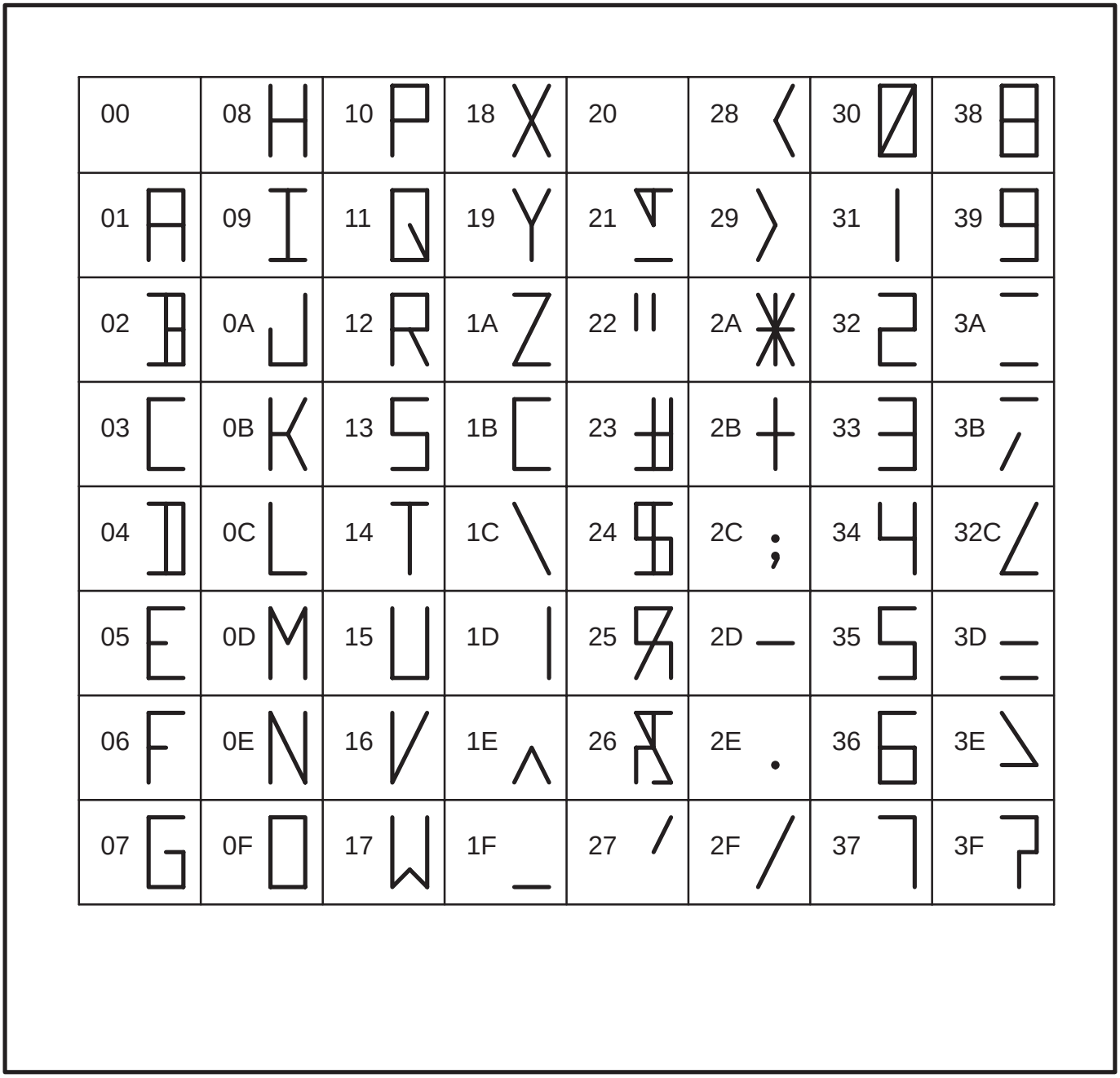

Artisan Technology Group - Quality Instrumentation ... Guaranteed | (888) 88-SOURCE | www.artisantg.com

A

Address, Rack, 5-1, 5-2
Applicable PLCs and Scanners, 4-2
Applications, Keypad Module, 2-2
Architecture, Remote I/O, 4-2
ASCII Data, 2-3, 6-2
ASCII Message Display, 6-2

B

BAD MSG NUMBER, A–2
Basic Troubleshooting, 8–3
Baud Rate, 3–5, 5–4
BCD, Datatype, 2–4, 5–4
Binary, Datatype, 2–4, 5–4
Bulletin 2705 RediPANEl Keypad Modules, 2–1

C

Calculating Rack Size, 4–7
COMM (Communications)
  Blinking, 8–2
  Indicator, 8–2
  OFF, 8–2
  ON, 8–2
COMM SETUP ERR, A–1
COMM START ERROR, A–1
COMM 1 Fault, 8–1
Commands, Editing, 6–8
Communication Faults, 8–1
Communications, 4–1
Compatible PLCs and Scanners., 4–5
Configuring Keypad Module, 4–1
  Appropriate Scanner, 4–1
  Calculating Rack Size, 4–7
  Number of Chassis and Amount of I/O, 4–8
Configuration, Remote I/O, 4–8
Connecting to a Remote I/O Link, 3–5
  Cable Length, 3–5
  Cable Type, 3–5
Connecting to a Scanner Module, 3–6
  Cable Type, 3–6
  Wiring Connections, 3–6

D

Data Entry, 6–3
  Decimal Modes, 6–4
  Destination Entry, 6–4
  Polarity (minus sign), 6–4
  Split Display, 6–4
Data Type, 2–4, 5–4
  BCD, 2–4, 5–4
  Binary, 2–4, 5–4
  Integer, 2–4, 5–4
DATA TYPE ERROR, A–1
Datatype, 5–4
DC (Decimal Point Control), 7–26
Dec. Pos. (Decimal Position), 7–26
Decimal Point Control, 7–26
  DC (Decimal Point Control), 7–26
  Dec. Pos. (Decimal Position), 7–26
  SDP (Scratched Decimal Position), 7–26
Decimal Point Key, 2–3
DELETE Key, 6–5
Destination Bits, 5–4
Destination Entry, 6–4
  DELETE Key, 2–3, 6–5
  ENTER Key, 2–3, 6–5
Minus Key, 2–3, 6–5
Destination Function, Using the, 7–9
DIP Switches, 5–1
  Switch Bank #1, 5–2
  Switch Bank #2, 5–4
  Switch Bank #3, 5–5
Display Characters, A–3
Display, Keypad, 6–1
Display Message, 7–25
Display Stored Message, 2–4, 6–2
Displaying a Full Line Stored Message, 7–6
Displaying Numeric Data, 7–4

E

Editing Commands, 6–8
Editing Messages, 6–7
Editor, Message, 6–6
EEPROM CRC ERROR, A–2
EEPROM, Storing Messages on, 6–5
Electrical Precautions, 3–1
Electromagnetic Interference, 3–1, 3–2
Emergency Stop Switches, 3–1
Enclosures, NEMA, 3–1
ENTER Key, 6–5

Artisan Technology Group - Quality Instrumentation ... Guaranteed | (888) 88-SOURCE | www.artisantg.com

Entering Messages, 6–7
Editing, 6–7
Editing Commands, 6–8
Storing, 6–7
Entering or Changing Data, 7–7
EPROM CRC ERROR, A–1
Error Messages, A–1
    BAD MSG NUMBER, A–2
    COMM SETUP ERR, A–1
    COMM START ERROR, A–1
    DATA TYPE ERROR, A–1
    EEPROM CRC ERROR, A–2
    EPROM CRC ERROR, A–1
    EXTERNAL RAM ERROR, A–1
    INTERNAL RAM ERR, A–1
    INT/TIMER1 ERROR, A–1
    MESSAGE ERROR, A–2
    OVERFLOW, A–1
    PLC SENT NON–BCD, A–2
    RACK CONFIG ERR, A–1
    SYSTEM ERROR, A–1
    WATCHDOG FAILURE, A–2
EXTERNAL RAM ERROR, A–1

F

Fault
    Blinking, 8–1
    Indicator, 8–1
    LEDs, 8–1
    OFF, 8–1
    ON, 8–1
Features, Keypad Module, 2–1, 2–3
First I/O Group, 5–2
Format and Communication
    Parameters, 5–1, 5–4
Full Line Stored Message,
    Displaying, 7–6
Function Keys, 7–25
Functions, Keypad Module, 2–1

G

Grounding, 3–1
Group, First I/O, 5–2

H

Handshake, 2–4, 5–4, 7–28
Horizontal Mounting, 3–2
Hexadecimal/ASCII Values, A–3

I

Image Tables, I/O, 7–30
Indicator, Fault, 8–1
Information Display, 2–3
Input and Output Image Tables, 7–30
Integer, Datatype, 2–4, 5–4
INTERNAL RAM ERR, A–1
INT/TIMER1 ERROR, A–1
I/O Image Tables, 7–30
    Symbols and Abbreviations, 7–25
I/O, Remote Link, 2–1

K

Keyboard Style, 5–5
Keypad Display, 6–1
Keypad Layout, 6–3
Keypad Modules, 1–2
    Applications, 2–2
    Configuring, 4–1
    Data Input, 2–3
    Features, 2–1, 2–3
    Functions, 2–1
    Programming, 7–1
Keypad Output Display, 6–1
    ASCII Data, 6–2, 2–3
    ASCII Message Display, 6–2
    Display Stored Message, 2–4, 6–2
    Numeric Data, 6–2
Keys
    Decimal Point, 2–3
    DELETE, 6–5
    ENTER, 6–5
    Minus, 6–5
    Numeric, 2–3, 6–3
Keyswitch, 2–4, 5–4

L

Last Device, 5–4
Last State, 2–4, 5–4
Link, Remote I/O, 1–2

M

Maintenance and Troubleshooting,
    8–1
Mechanical Installation
    Dimensions, 3–4
    Procedures, 3–4

Artisan Technology Group - Quality Instrumentation ... Guaranteed | (888) 88-SOURCE | www.artisantg.com

Message, Display, 7–25
Message Display, ASCII, 6–2
Message Editor, 6–6
MESSAGE ERROR, A–2
Messages, 6–5
  ASCII Display, 6–2
  Editing, 6–7
  Entering, 6–7
  Error, A–1
  Keyboard, 6–6
Minus Key (Polarity), 6–4, 6–5
Move Instruction 7–4

N

NEMA Enclosures, 3–1
  Convection Cooling, 3–2
  Horizontal Mounting, 3–2
  Installation, 3–3
  Module Spacing, 3–3
  Vertical Stacking, 3–2
NEMA Rating, 2–1
Networking, Remote I/O, 1–2
Numeric Data, 6–2
Numeric Data, Displaying, 7–4

O

Operator Data Input, 2–3
Output Display, Keypad, 6–1
OVERFLOW, A–1

P

PLC, 1–2
PLC SENT NON–BCD, A–2
PLC–2 Programming Example, 7–16
  Accumulated Values of Counter, 7–21
  Displaying 16–Character Message, 7–23
  Displaying Message and Variable Data, 7–24
  Example Program, 7–17
  Preset Value of Counter, 7–22
  Program Set–up, 7–19
  Using Destination Bits to Retrieve/Change Data, 7–24
PLC–5 Programming Example, 7–2
  Displaying a Full Line Stored Message, 7–6
  Displaying Numeric Data, 7–4
  Entering or Changing Data, 7–7
  I/O Image Tables, 7–3
  System Configuration, 7–2
  Triggering a Stored Message, 7–5
  Using the Destination Function, 7–9
Power Requirements, 3–1
Power Source
  Module Type, 3–1
  Switch Settings, 3–1
Power–up Sequence
  Error Message Display, 8–2
Programming Examples
  PLC–2, 7–16
  PLC–5, 7–2

R

Rack Address, 5–1, 5–2
RACK CONFIG ERR, A–1
Rack Size, Calculating, 4–7
Rating, NEMA, 2–1
Remote I/O
  Architecture, 4–2
  Communications, 2–4
  Configuration, 4–8
  Connecting to, 3–5
  Link, 1–2
  Networking, 1–2

S

Scanner Module, Connecting to, 3–6
Scanners, Applicable PLCs and, 4–2
SDP (Scratched Decimal Position), 7–26
Security Keyswitch, 2–3, 2–4
Serial Data Link Cable, 3–5
Setting DIP Switches, 5–2
SMD and Destination Format, 5–5
Specifications, 9–1
Split Display, 5–5, 6–4
Stored Message, 2–4, 5–5
Stored Message Display, 2–4, 7–5, 7–25
Storing Messages on EEPROM, 6–5
Switch Bank #1
  First I/O Group, 5–2
  Rack Address, 5–2
Switch Bank #2
  Baud Rate, 3–5, 5–4
  Datatype, 5–4
  Destination Bits, 5–4

Artisan Technology Group - Quality Instrumentation ... Guaranteed | (888) 88-SOURCE | www.artisantg.com

Handshake, 2–4, 5–4
Keyswitch, 2–4, 5–4
Last Device, 5–4
Last State, 2–4, 5–4
Switch Bank #3
Keyboard Style, 5–5
SMD and Destination Format, 5–5
Split Display, 5–5
Stored Message, 2–4, 5–5
Symbols and Abbreviations for I/O Image Tables, 7–25
DM (Display Message), 7–25
EN (Enter), 7–25
H (Handshake Bit), 7–25
F1–F6 (Function Keys), 7–25
L1–L6 (LEDs), 7–25
SMD (Stored Message Display), 2–4, 7–25
SYSTEM ERROR, A–1

T

Triggering a Stored Message, 7–5
Troubleshooting, 8–3
Typical Switch Settings, 5–2

U

Using PLC–5s and a Sub I/O Scanner, 7–11
Continuous, 7–13
Control Block, 7–13
Data File. 7–13
Group, 7–12
Instruction Parameters, 7–12
Length, 7–13
Module, 7–12
Programming Example, 7–13, 7–15
Rack, 7–12
Using the Destination Function. 7–9

W

WATCHDOG FAILURE, A–2
Wiring, 3–1

Artisan Technology Group - Quality Instrumentation ... Guaranteed | (888) 88-SOURCE | www.artisantg.com

Rockwell *Automation*

Rockwell Automation helps its customers receive a superior return on their investment by bringing together leading brands in industrial automation, creating a broad spectrum of easy-to-integrate products. These are supported by local technical resources available worldwide, a global network of system solutions providers, and the advanced technology resources of Rockwell.

Worldwide representation.

Argentina • Australia • Austria • Bahrain • Belgium • Bolivia • Brazil • Bulgaria • Canada • Chile • China, People's Republic of • Colombia • Costa Rica • Croatia • Cyprus Czech Republic • Denmark • Dominican Republic • Ecuador • Egypt • El Salvador • Finland • France • Germany • Ghana • Greece • Guatemala • Honduras • Hong Kong Hungary • Iceland • India • Indonesia • Iran • Ireland • Israel • Italy • Jamaica • Japan • Jordan • Korea • Kuwait • Lebanon • Macau • Malaysia • Malta • Mexico • Morocco The Netherlands • New Zealand • Nigeria • Norway • Oman • Pakistan • Panama • Peru • Philippines • Poland • Portugal • Puerto Rico • Qatar • Romania • Russia • Saudi Arabia • Singapore • Slovakia • Slovenia • South Africa, Republic of • Spain • Sweden • Switzerland • Taiwan • Thailand • Trinidad • Tunisia • Turkey • United Arab Emirates United Kingdom • United States • Uruguay • Venezuela

Rockwell Automation Headquarters, 1201 South Second Street, Milwaukee, WI 53204-2496 USA, Tel: (1) 414 382-2000 Fax: (1) 414 382-4444
Rockwell Automation European Headquarters, Avenue Hermann Debroux, 46, 1160 Brussels, Belgium, Tel: (32) 2 663 06 00, Fax: (32) 2 663 06 40
Rockwell Automation Asia Pacific Headquarters, 27/F Citicorp Centre, 18 Whitfield Road, Causeway Bay, Hong Kong, Tel: (852) 2887 4788, Fax: (852) 2508 1846
World Wide Web: http://www.ab.com

Publication 2705-ND002 Series A
Supersedes Publication 2705-801 Dated November 1987

40061-144-01(A)
Copyright 1993 Allen-Bradley Company, Inc. Printed in USA

Artisan Technology Group - Quality Instrumentation ... Guaranteed | (888) 88-SOURCE | www.artisantg.com

Artisan Technology Group is an independent supplier of quality pre-owned equipment

Gold-standard solutions

Extend the life of your critical industrial, commercial, and military systems with our superior service and support.

We buy equipment

Planning to upgrade your current equipment? Have surplus equipment taking up shelf space? We'll give it a new home.

Learn more!

Visit us at **artisantg.com** for more info on price quotes, drivers, technical specifications, manuals, and documentation.

Artisan Scientific Corporation dba Artisan Technology Group is not an affiliate, representative, or authorized distributor for any manufacturer listed herein.

We're here to make your life easier. How can we help you today?

(217) 352-9330 | sales@artisantg.com | artisantg.com

ARTISAN® TECHNOLOGY GROUP