Artisan Technology Group

Artisan Technology Group is your source for quality new and certified-used/pre-owned equipment

- FAST SHIPPING AND DELIVERY
- TENS OF THOUSANDS OF IN-STOCK ITEMS
- EQUIPMENT DEMOS
- HUNDREDS OF MANUFACTURERS SUPPORTED
- LEASING/MONTHLY RENTALS
- ITAR CERTIFIED SECURE ASSET SOLUTIONS

SERVICE CENTER REPAIRS
Experienced engineers and technicians on staff at our full-service, in-house repair center

InstraView℠ REMOTE INSPECTION
Remotely inspect equipment before purchasing with our interactive website at ***www.instraview.com*** ↗

WE BUY USED EQUIPMENT
Sell your excess, underutilized, and idle used equipment
We also offer credit for buy-backs and trade-ins
www.artisantg.com/WeBuyEquipment ↗

LOOKING FOR MORE INFORMATION?
Visit us on the web at ***www.artisantg.com*** ↗ for more information on price quotations, drivers, technical specifications, manuals, and documentation

Contact us: (888) 88-SOURCE | sales@artisantg.com | www.artisantg.com

VXIbus Development Module

An ideal platform to create a custom module

V525

Features

- **Single-width VXI module**
- **VXI register-based interface**
- **Strap-selectable power and ground arrays**
- **Provisions for up to 3 plug-in development cards**
- **Front panel hardware, connectors, and shields are included**

Typical Applications

- **Product development and prototyping**
- **Custom products**

General Description

The V525 is a single-width, C-size, VXIbus module that provides a prototyping and development platform consisting of a standard, VXI, register-based interface and an array of holes for circuit breadboarding. Power and ground are strap-selectable to points within the array of holes that allow for IC packages with 0.3" and 0.6" pin spacing as well as spacing for PGA sockets up to 17 pins per side. In addition, six 50-position, interboard connectors are provided on the host module which carry VXIbus address, data, control, power, and ground signals. These connectors allow the user to develop circuitry on up to three plug-in submodule cards for reconfigurable or higher density applications.

The register-based VXI interface on the V525 provides the configuration registers required by the VXIbus specification so that the appropriate levels of system configuration can be accomplished. Access to the configuration registers is available through the VMEbus Short Address (A16) Space. The V525 supports both static and dynamic configuration. Additionally, circuitry is provided to interface to user-supplied operational registers positioned in VMEbus Standard Address (A24) Space.

The V525-AA11 option includes a front-panel that accepts three submodules with 68P High Density connectors. Sufficient interface and physical information is available to allow you to develop custom submodules. The V525-AB11 option includes a front panel and two 68P High Density board mounted connectors on the host module. LED indicators for address recognition and utility purposes as well as left and right-side ground shields are provided on both options

V525 Interface Paths

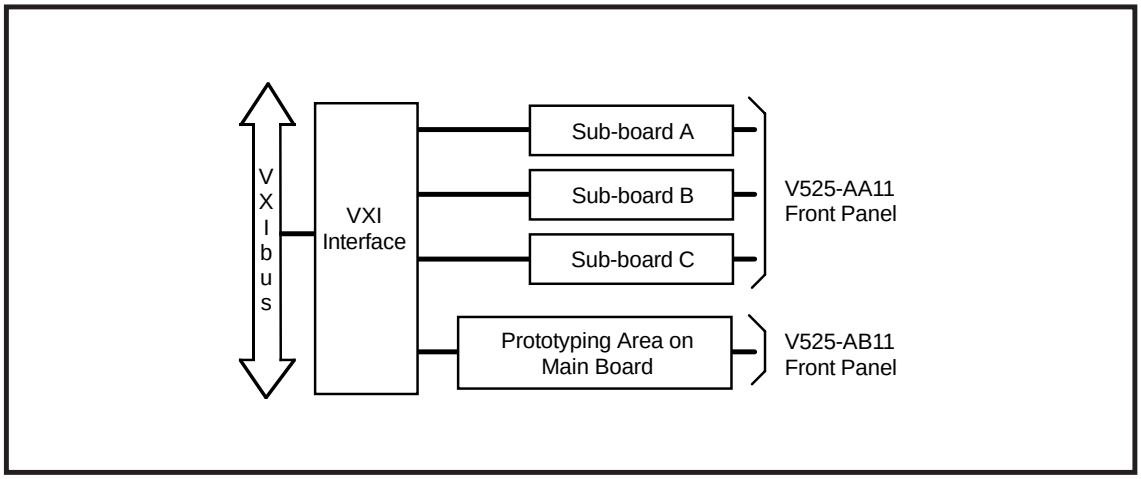

Artisan Technology Group - Quality Instrumentation ... Guaranteed | (888) 88-SOURCE | www.artisantg.com

Item	Specification
Interface Power Requirements	
+5 V	1 A
Power Available to Breadboard/Submodules	*Note: Total available mainframe power must also be checked.*
+5 V	6 A max.
-5.2 V	5 A max.
-2 V	2 A max.
+12 V	1 A max.
-12 V	1 A max.
+24 V	1 A max
-24 V	1 A max
+15 V	TBD mA max.
-15 V	TBD mA max.
Environmental and Mechanical	
Temperature range	
Operational	0°C to 50°C
Storage	-25°C to +75°C
Relative Humidity	0 to 85%, non-condensing to 40°C
Cooling Requirements	10 CFM
Dimensions	340 mm x 233.35 mm x 30.48 mm (V-size VXIbus)
Front-panel potential	Chassis Ground

Ordering Information

Model V525-AA11 VXIbus Development Module with submodule connector front-panel option
Model V525-AB11 VXIbus Development Module with host module connector front-panel option

Note: Each V525-AA11 includes connectors for 3 custom submodules. The submodules are not included. However, sufficient interface and physical information is available to allow you to develop custom submodules.

Artisan Technology Group - Quality Instrumentation ... Guaranteed | (888) 88-SOURCE | www.artisantg.com

Artisan Technology Group

Artisan Technology Group is your source for quality new and certified-used/pre-owned equipment

- FAST SHIPPING AND DELIVERY
- TENS OF THOUSANDS OF IN-STOCK ITEMS
- EQUIPMENT DEMOS
- HUNDREDS OF MANUFACTURERS SUPPORTED
- LEASING/MONTHLY RENTALS
- ITAR CERTIFIED SECURE ASSET SOLUTIONS

SERVICE CENTER REPAIRS
Experienced engineers and technicians on staff at our full-service, in-house repair center

InstraView℠ REMOTE INSPECTION
Remotely inspect equipment before purchasing with our interactive website at ***www.instraview.com*** ↗

WE BUY USED EQUIPMENT
Sell your excess, underutilized, and idle used equipment
We also offer credit for buy-backs and trade-ins
www.artisantg.com/WeBuyEquipment ↗

LOOKING FOR MORE INFORMATION?
Visit us on the web at ***www.artisantg.com*** ↗ for more information on price quotations, drivers, technical specifications, manuals, and documentation

Contact us: (888) 88-SOURCE | sales@artisantg.com | www.artisantg.com