Artisan Technology Group

Artisan Technology Group is your source for quality new and certified-used/pre-owned equipment

- FAST SHIPPING AND DELIVERY
- TENS OF THOUSANDS OF IN-STOCK ITEMS
- EQUIPMENT DEMOS
- HUNDREDS OF MANUFACTURERS SUPPORTED
- LEASING/MONTHLY RENTALS
- ITAR CERTIFIED SECURE ASSET SOLUTIONS

SERVICE CENTER REPAIRS
Experienced engineers and technicians on staff at our full-service, in-house repair center

InstraView℠ REMOTE INSPECTION
Remotely inspect equipment before purchasing with our interactive website at ***www.instraview.com*** ↗

WE BUY USED EQUIPMENT
Sell your excess, underutilized, and idle used equipment
We also offer credit for buy-backs and trade-ins
www.artisantg.com/WeBuyEquipment ↗

LOOKING FOR MORE INFORMATION?
Visit us on the web at ***www.artisantg.com*** ↗ for more information on price quotations, drivers, technical specifications, manuals, and documentation

Contact us: (888) 88-SOURCE | sales@artisantg.com | www.artisantg.com

PCI-416

Ultra-Performance, Analog Input Boards for PCI Computers

NEW
Hyperception
Win95/NT Software

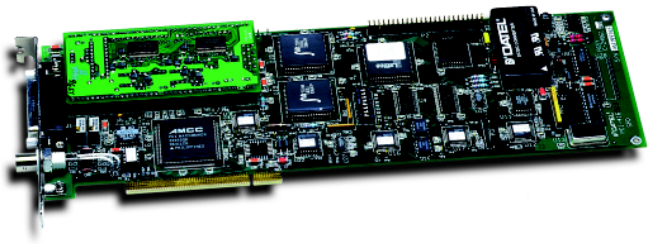

FEATURES

- **The ideal array-processor "front end"**
- **Up to 10MHz A/D sampling rates**
- **Choice of 12, 14 or 16-bit A/D resolutions**
- **Wideband inputs with low harmonic distortion**
- **Quick, 32-bit, PCI block transfers**
- **2 to 16-channel simultaneous sampling eliminates phase skew**
- **On-board A/D FIFO memory holds 8k samples**
- **64 megasamples or greater data streaming**
- **Pre/post-trigger, gap-free, ring buffering**
- **Great for DSP, FFT's, digital filtering, etc.**
- **Pentium® compatible; Windows 95/NT software**

The PCI-416 Family consists of several advanced-performance, data acquisition boards based on the 32-bit PCI bus architecture. With an emphasis on continuous, non-stop, high-speed streaming of A/D samples to host memory or disk, the system has been optimized for a wide range of signal-processing and data-recording applications. In very long "baseline" studies or high-speed transient analysis, the PCI-416 can collect huge amounts of "seamless" digitized data to host memory.

Exploiting a unique "banked" FIFO architecture, the PCI-416 moves two A/D words in each 32-bit PCI transfer. The FIFO memory (8k samples deep) serves to decouple the precise timing of the A/D converter from the block bursts of the PCI bus.

The PCI-416's optional analog front ends utilize DATEL's low-noise, wide-bandwidth sampling A/D converters. All models exhibit excellent harmonic distortion and perform well in DSP/FFT applications. Software for Windows 95, NT, DOS, Hyperception and LabVIEW® implements a menu-driven, "no-programming", fast data recording and display system to memory or disk.

Several different "pluggable" analog options offer up to 16 input channels in single-ended or differential configurations, multiple input ranges, sampling rates to 10MHz, 12/14/16-bit A/D resolutions, and various simultaneous sampling configurations (1 A/D per channel) up to 16 channels. The simultaneous feature is intended for parallel sampling applications that cannot tolerate phase skew introduced by the A/D system. These include sonar or acoustic sensor arrays, cross-channel computation, multiple

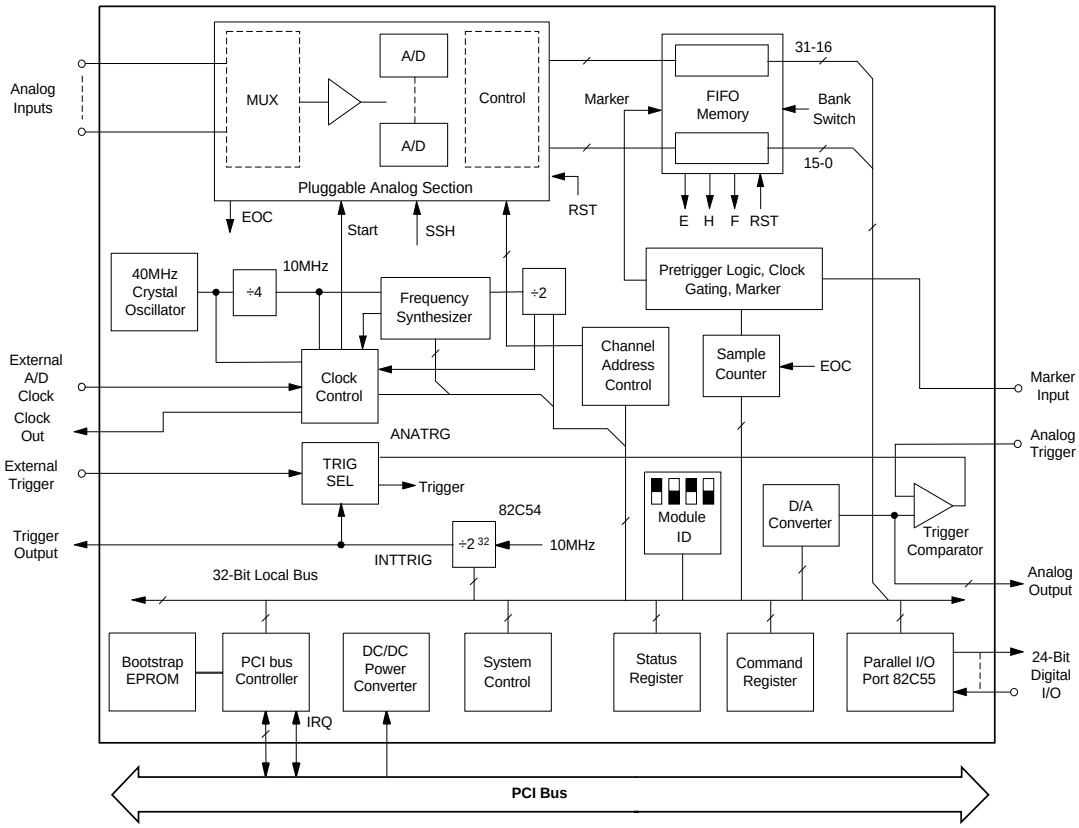

Figure 1. Functional Block Diagram

Artisan Technology Group - Quality Instrumentation ... Guaranteed | (888) 88-SOURCE | www.artisantg.com

Downloaded from DatasheetLib.com - datasheet search engine

carrier demodulation, interferometry, multi-channel spectrometers, and highly concurrent system testing. High-quality, wide-bandwidth, low-noise A/D's and analog components are used. The design is ideal as an array processor "front end" or for DSP/FFT (Digital Signal Processing/Fast Fourier Transform) usage.

Two on-board software-programmable timebases run the A/D sample clock. A 40MHz frequency synthesizer provides high resolution, whereas the 10MHz 16-stage programmable divider offers very low clock jitter. If preferred, external clocks can be used for both the A/D start clock and the trigger. And several PCI-416's can be connected in master-slave clocking for many simultaneous channels. A programmable 24-bit sample counter collects long blocks up to 16 million samples. The trigger system collects a single fixed length frame, N repeating frames separated by programmable delays, or it can run "forever". Interrupts to the PCI bus are programmable from the FIFO half full flag, the bus master block transfer done, or the sample counter.

System features optimize gapless sampling without data loss. A pretrigger system can collect data continuously to host circular memory (ring buffer) of several megabytes or more. When an external trigger is received, the PCI-416 will count down the number of preloaded post-trigger samples then automatically stop when all samples are collected. The trigger sample may then be found using a negative circular offset into the ring buffer, knowing the post-trigger sample count.

In addition, a digital marker input will tag data samples on the fly as often as needed. This provides later identification of external events without stopping sample collection. A D/A analog output is included to set the trip level to generate an external analog triggers. Or the D/A can be used for analog output.

A general-purpose, 24-bit (82C55) digital I/O port which is separate from the fast A/D parallel port can control external circuits. The parallel port uses an internal header connector.

Like any PC hardware, the PCI-416 needs software to command and control it. Data acquisition, data display and data storage applications are available for Windows® 95/98, Windows® NT, Hyperception, National Instrument's LabVIEW®, and MS-DOS®. Simply install the software on your PC and you will be acquiring and storing data within minutes. When data acquisition is complete, any third party data processing application can be used to analyze the results. Non-programmers will be very interested in our Hyperception and LabVIEW® driver libraries. These visual programming environments allows you to create custom Windows® 95/98 virtual instruments for test and measurement applications, without writing code.

Programmers developing their own code may need to customize the system to better suit an application, or simply to integrate the PCI-416 with existing software. Professionally written, well commented source code for all of DATEL's software is available. Everything from dynamic link library (DLL) functions to graphic user interface (GUI) modules are provided to accommodate all levels of software development. The software was designed using common integrated development environments such as C/C++, Delphi®, and C++ Builder®. To help with your development efforts, most source code is accompanied with comprehensive, well written reference manuals. If you run into problems along the way, you can rely on DATEL's team of highly qualified technical support and applications engineers to guide you through.

REGISTER I/O or MEMORY MAPPING

All of the PCI-416's registers require 32-bit instructions. DATEL software provides highly portable examples which can be used with any language. All registers are fully described in the User Manual included with the board.

Base Address Register	Function
BADR0	S5933 PCI controller operation registers
BADR1	Pass-Thru Address Register Latch (ARL)
BADR2	Read/Write general registers
	If ARL=0, Command register (write only) If ARL=4, Sample counter (write only) If ARL=8, Channel address register (write) Clear A/D FIFO memory (read) If ARL=12, A/D convert enable (write only) If ARL=16, PLL register (write only)
BADR3	High-speed read of status register or A/D FIFO data
	If ARL=0, Status register (read only) If ARL=4, A/D FIFO data (read only)
BADR4	Low-speed devices, 82C54 and 82C55, and analog output
	82C54 Programmable counter-timer (read/write)
	If ARL=0, Counter 0 If ARL=4, Counter 1 If ARL=8, Counter 2 If ARL=12, Control register
	82C55 Programmable parallel port (read/write)
	If ARL=16, Port A If ARL=20, Port B If ARL=24, Port C If ARL=28, Control register
	Analog output (D/A channel)
	If ARL=32, D/A converter register (write only)

Artisan Technology Group - Quality Instrumentation ... Guaranteed | (888) 88-SOURCE | www.artisantg.com

Downloaded from DatasheetLib.com - datasheet search engine

FUNCTIONAL SPECIFICATIONS

(Typical at +25°C, dynamic conditions, gain = 1, unless noted)

ANALOG INPUTS	PCI-416B	PCI-416D	PCI-416E	PCI-416F
Number of Channels	4	1	16SE/8D	2 Simultaneous
Input Configuration (non-isolated) [Footnote 15]	Single Ended	Differential	SE or Diff.	Single Ended
Full Scale Input Ranges (user-selectable) (gain = 1)	0 to +10 V ±10 V ±5 V	±5 V (0 to +10 V, special order)	0 to +10 V ±10 V ±5 V [Footnote 1]	0 to +10 V ±5 V
Input Overvoltage (no damage, power on)	±15 V	±15 V	±15 V	±15 V
Overvoltage Recovery Time, maximum	2 µs	2 µs	2 µs	2 µs
Common Mode Voltage Range, maximum	—	±1 V	±10 V	—
Input Impedance	10 MΩ	2 kΩ	100 MΩ	>1 MΩ
SAMPLE/HOLD				
Acquisition Time	750 ns	50 ns	750 ns	165 ns
Aperture Delay	20 ns	10 ns	20 ns	20 ns
Aperture Delay Uncertainty	±100 ps	±7 ps	±40 ps	±40 ps
A/D CONVERTER				
Resolution	14 bits	12 bits	12 bits	12 bits
Conversion Period	1.6 µs	200 ns	500 ns	400 ns
Number of A/D Converters	1	1	1	2
SYSTEM DC CHARACTERISTICS [Footnote 6]				
Integral Non-linearity (LSB of FSR)	±1.5	±2	±1	±1
Differential Non-linearity (LSB of FSR)	±1	±1	±0.75	±1
Full Scale Temperature Coefficient (LSB per °C)	±0.3	±0.1	±0.1	±0.1
Zero or Offset Temperature Coefficient (LSB per °C)	±0.3	±0.3	±0.1	±0.1
SYSTEM DYNAMIC PERFORMANCE [Footnote 2]				
Sample Rate (single channel only)	500 kHz	5 MHz	2 MHz	2 MHz
Sample Rate per Channel (simul. or sequential chans.) [Footnote 4]	82 kHz/chan.	—	31.25 kHz/chan.	2 MHz/chan.
Total Harmonic Distortion [Footnote 3]	–75 dB	–68 dB	–72 dB	–70 dB

Note: Model PCI-416J in short-cycled addressing is recommended in place of the PCI-416A.
Model PCI-416E can substitute for the PCI-416C.

ANALOG INPUTS	
Programmable Gains	See Footnote 1
Common Mode Rejection (DC - 60 Hz)	-80 dB (g = 100) (416E)
Addressing Modes (short cycle channel addressing is software-selectable on PCI-416J,L)	1. Single channel 2. Simultaneous sampling 3. Sequential with autosequenced addressing 4. Random addressing by host software

A/D CONVERTER	
Output Coding	Positive-true, right justified, straight bin. (unipolar) or right-justified 2's comp. (bipolar) with sign extension thru bit 15
Warm-Up Period	20 minutes until rated specifications. [Footnote 6]

Please read all footnotes carefully.

Artisan Technology Group - Quality Instrumentation ... Guaranteed | (888) 88-SOURCE | www.artisantg.com
Downloaded from DatasheetLib.com - datasheet search engine

FUNCTIONAL SPECIFICATIONS

(Typical at +25°C, dynamic conditions, gain = 1, unless noted)

ANALOG INPUTS	PCI-416G	PCI-416H	PCI-416J	PCI-416K
Number of Channels	2 Simultaneous	1	8 Simultaneous	2 Simultaneous
Input Configuration (non-isolated) [Footnote 15]	Single Ended	Differential	Single Ended	Limited Differential
Full Scale Input Ranges (user-selectable) (gain = 1)	±5 V or 0 to +10 V (separate models)	±5 V (other ranges special order)	±5 V, ±10 V [Footnote 10]	0 to +10 V, ±5 V (separate models)
Input Overvoltage (no damage, power on)	±15 V	±15 V	±15 V	±15 V
Overvoltage Recovery Time, maximum	2 µs	1 µs	—	—
Common Mode Voltage Range, maximum	—	±1 V	—	±1 V
Input Impedance	>1 MΩ	2 kΩ	8 kΩ (bipolar)	1 kΩ
SAMPLE/HOLD				
Acquisition Time	350 ns	35 ns	400 ns	50 ns
Aperture Delay	20 ns	±10 ns	—	10 ns
Aperture Delay Uncertainty	±70 ps	3 ps rms	—	±7 ps
A/D CONVERTER				
Resolution	14 bits	12 bits	12 bits	12 bits
Conversion Period	1 µsec*	100 ns	2 µs (all chans. in simul. sampling)	200 ns
Number of A/D Converters	2	1	8	2
SYSTEM DC CHARACTERISTICS [Footnote 6]				
Integral Non-linearity (LSB of FSR)	±1.5	±1.5	±1	±2
Differential Non-linearity (LSB of FSR)	±1	±1	±1	±1
Full Scale Temperature Coefficient (LSB per °C)	±0.3	±1	[Footnote 10]	±0.1
Zero or Offset Temperature Coefficient (LSB per °C)	±0.3	±1	[Footnote 10]	±0.3
SYSTEM DYNAMIC PERFORMANCE [Footnote 2]				
Sample Rate (single channel only)	1 MHz*	10 MHz	400 kHz	5 MHz
Sample Rate per Channel (simul. or sequential chans.) [Footnote 4]	1 MHz/chan.*	—	250 kHz/chan.**	5 MHz/ch.
Total Harmonic Distortion [Footnote 3]	–80 dB	–65 dB	–75 dB	–68 dB

*Dual 2MHz 14-bit sampling is available on special order, model PCI-30267.
**A 380kHz/channel option is available on special order, model PCI-30264.

Artisan Technology Group - Quality Instrumentation ... Guaranteed | (888) 88-SOURCE | www.artisantg.com
Downloaded from DatasheetLib.com - datasheet search engine

FUNCTIONAL SPECIFICATIONS

(Typical at +25°C, dynamic conditions, gain = 1, unless noted)

ANALOG INPUTS	PCI-416L	PCI-416M	PCI-416N	PCI-416P
Number of Channels	16 Simultaneous	4 Simultaneous	2 Simultaneous	4 Simultaneous A/D's
Input Configuration (non-isolated) [Footnote 15]	Single Ended	Single Ended	Single Ended	Single Ended
Full Scale Input Ranges (user-selectable) (gain = 1)	±5 V, ±10 V, (user selectable) [Footnote 10]	±10 V	±2.5 V	±2.5 V or 0 to +5 V (user selectable)
Input Overvoltage (no damage, power on)	±15 V	±12 V	±15 V	±7 V
Overvoltage Recovery Time, maximum	—	—	—	—
Common Mode Voltage Range, maximum	—	—	—	—
Input Impedance	8 kΩ	10 MΩ	10 MΩ or 50 Ω	1000 Ω
SAMPLE/HOLD				
Acquisition Time	400 ns	2 µs	35 ns	80 ns
Aperture Delay	—	—	±10 ns	—
Aperture Delay Uncertainty	—	—	5 ps	—
A/D CONVERTER				
Resolution	12 bits	16 bits	14 bits	14 bits
Conversion Period	2 µs (all chans. in simul. sampling)	5 µs (all chans. in simul. sampling)	200 ns (all chans. in simul. sampling)	400 ns
Number of A/D Converters	16	4	2	4
SYSTEM DC CHARACTERISTICS [Footnote 6]				
Integral Non-linearity (LSB of FSR)	±2	±4	±1	±3
Differential Non-linearity (LSB of FSR)	±1	±3	±1	±1.5
Full Scale Temperature Coefficient (LSB per °C)	[Footnote 10]	±1	±0.5	±0.5
Zero or Offset Temperature Coefficient (LSB per °C)	[Footnote 10]	±1	±0.5	±0.5
SYSTEM DYNAMIC PERFORMANCE [Footnote 2]				
Sample Rate (single channel only)	400 kHz	200 kHz	5 MHz	3 MHz* min.
Sample Rate per Channel (simul. or sequential chans.) [Footnote 4]	190 kHz/chan.	200 kHz/chan.	5 MHz/chan.	2.5 MHz/chan.
Total Harmonic Distortion [Footnote 3]	-75 dB	-83 dB	-75 dB	-75 dB

* The sample rate to published specifications is 3 MHz. The A/D is functional to 5 MHz. Valid data output per channel is delayed by 4 samples after the start of the sample clock. Please make note of this for products such as the PC-414P, PC-430P, and DVME-614P which use non-continuous A/D sampling. Data output is pipelined meaning that the first four samples per channel should be discarded. For all 4 channels, discard 16 samples. The design is intended for semi-continuous sampling of wideband signals and is less suitable for low speed data acquisition. Approximately 5 dB SFDR improvement can be achieved by directly connecting an external A/D sample clock. Contact DATEL for details.

Artisan Technology Group - Quality Instrumentation ... Guaranteed | (888) 88-SOURCE | www.artisantg.com
Downloaded from DatasheetLib.com - datasheet search engine

SPECIFICATIONS, CONTINUED

(Typical @ +25°C, dynamic conditions, unless noted)

A/D SAMPLE CLOCK	
Sample Clock Sources [Footnote 7]	Selectable from among: 1. Frequency synthesizer* 2. 10MHz crystal oscillator 3. 20MHz crystal oscillator 4. 16-stage binary divider to either 1 or 2, maximum input: 10MHz 5. External digital input
Frequency Synthesizer (not available on PCI-416N2)	Output 5-10MHz in 625Hz steps, further divisible by 16-stage binary divider, all software programmable. Up to 40MHz is available in 2500Hz steps.
Total Sample Range	76.3Hz to 10MHz (40MHz available)
Oscillator Frequency Accuracy	±50ppm (+20 to +30°C)
Crystal Aging	±5ppm/year
TRIGGER CONTROL	
Trigger Sources [Footnote 8]	1. Analog threshold comparator using internal D/A to set trip level** 2. Internal trigger derived from10MHz timebase, divided by 32-stage divider (82C54). Range: 20ns to 429.5 seconds. 3. External digital trigger
Trigger Response	Selectable from among: 1. Starts one frame (“single trigger mode”) 2. Collects repeating frames, each started by a trigger (“continuous trigger mode”). 3. Runs the A/D “forever” (sample counter disabled)
A/D Samples per Frame	1 to 16,777,216 samples (24-bit counter) or “forever”
Analog Trigger Input Range	±10V
Analog Trigger Response	2µs [Footnote 5]
Analog Trigger Hysteresis	±40mV
Marker Input	Digital input which sets A/D bit 15 to logic “1" for one A/D clock cycle. Used to tag samples to external events if enabled.
Pretrigger Mode	The sample down-counter is delayed until an external trigger. Pretrigger samples are stored in a host ring buffer for transient capture, if enabled.

*No frequency synthesizer on PCI-416N2.
**No analog trigger on PCI-416N2.

ANALOG OUTPUT (not available on PCI-416N2)	
Number of Channels	One channel
Function	Selectable from among: 1. General-purpose analog output 2. Threshold comparator for A/D trigger
Resolution	12 bits
Output Voltage Range	0 to +10V, ±5V, ±10V at 5mA max. (user selectable)
Linearity	±0.05% of FSR
Settling Time	5 microseconds (10V step)
Input Coding	Straight binary
PCI Bus	
Data Bus Size	32 bits
Address Bus Size	32 bits
PCI Controller Type	AMCC S5933 bus master or slave mode
Data Transfer	32-bit I/O or memory (selectable)
Bus Transfer Mode	Up to 2^{24} longwords, per PCI spec.
Interrupt	One interrupt, selectable to INTA, B, C, or D
Interrupt Sources	FIFO half full, sample count reached (ACQuire flag), bus master transfer done.
MISCELLANEOUS	
Board Identification Switch	4-bit DIP switch is factory preset to identify A/D module type. May be changed if another module is used.
Analog Section Modularity	The MUX-S/H-A/D module is socketed for function interchange.
Analog Section Adjustments	Offset and gain per channel for SSH on PCI-416F,G,K,M,N. A single offset and gain pot is provided on PCI-416B,D,E. Recommended recalibration interval is 90 days in stable conditions.
Operating Temp. Range	0 to +60°C, thermal shock ±1°C max per minute.
Storage Temp. Range	-25 to +85°C
Humidity	10% to 90%, non-condensing
Altitude	0 to 10,000 feet, forced cooling is required
Power Required	+5Vdc @ 3.0A max. from PCI bus. Compatible to +3.3V systems but makes no connection.
Outline Dimensions	4.2 x 12.28 x 0.5 inches, compatible to PCI bus
A/D MEMORY	
Architecture	First-In, First-Out (FIFO)
Memory Capacity	8192 A/D samples

Artisan Technology Group - Quality Instrumentation ... Guaranteed | (888) 88-SOURCE | www.artisantg.com
Downloaded from DatasheetLib.com - datasheet search engine

CONNECTORS	
PCI bus	120-pin (dual 60) PCI edgeboard connector
Analog Input (Model PCI-416P2 always includes SMA connectors)	DB-25 25-pin connector mounted on rear plate. Miniature threaded coaxial SMA connectors are available under special order for 4 input channels or less.
External Trigger [Footnote 9]	On DB-25 analog connector
External A/D Clock In	BNC coaxial on rear plate
Digital I/O Port	Internal header connector. External clock, D/A mounted on board interior, suitable for flat cables.
DIGITAL I/O PORT	
Configuration	24 lines, programmable as input or output with latches and handshakes
Controller	82C55
Levels	TTL logic, 1 TTL load in or out (direct from 82C55)
Outport Settling Time	50ns, after write operation

FOOTNOTES

1. Resistor-programmed gain (user supplied) from x1 to x100 is available on PCI-416E with increased settling delay at higher gains. Requires precision gain resistor.

2. Total throughput includes MUX settling time after changing the channel address, S/H acquisition time to rated specifications, A/D conversion, and FIFO transfer. Total throughput is not delayed by host software whenever the FIFO is not full.

3. THD test conditions are:
   1. Input freq. 500kHz (416F) 200kHz (416B,E,G) 50kHz (416J,L,M) 1MHz (416D,K) 2MHz (416H)
   2. Generator/filter THD is -90dB minimum.
   3. THD computed by FFT to 5th harmonic.

   $$THD = 20\left(\log10\ \frac{(V2^2 + V3^2 + V4^2 + V5^2)^{0.5}}{Vin}\right)$$

   4. Inputs are full scale less 0.5dB. No channel advance.
   5. A/D sample rate = 500kHz (416B,E,G), 5MHz (416D,K), 2MHz (416F), 10MHz (416H), 250kHz (416J), 190kHz (416L,M)
   6. Crystal oscillator is used.

4. The rates shown for sequential sampling are the maximum A/D converter start rates and include MUX sequencing and settling. For example, if four channels of the PCI-416E were scanned, the maximum sample rate on any one channel would be 2µs x 4 channels = 8µs (125kHz per channel).

5. For fastest response on the analog comparator trigger, keep the reference voltage near the trip input voltage. To avoid overload recovery delays, do not let the trip input (or any other analog input) exceed ±10V.

6. Allow 20 minutes warmup time to rated specifications for models PCI-416B,G,M,N.

7. Use the crystal oscillator for best harmonic performance.

8. Avoid mixing external triggers which are a close submultiple of the internal A/D start clock to prevent sample jitter.

9. The BNC connector may be rewired to either external trigger or external A/D clock.

10. PCI-416J and 416L bipolar input is user-selectable ±5V or ±10V (default) per channel. Total gain error over temperature range is ±4 LSB maximum. Total zero/offset error over temperature range is ±4 LSB maximum. Monotonicity: no missing codes over temperature range.

11. Input polarity. Some models are fixed as bipolar only whereas others are user-selectable unipolar or bipolar. Still others require separate model numbers.

12. PCI-416D, H, and K, inputs are jumpered as single-ended. Special, user-configured wiring allows differential operation.

13. Models F, G, J, K, L, M, N, and P use one A/D converter per channel.

14. The customer must use shielded cables to insure EMC compliance.

15. A/D-per-channel boards (models F, G, J, K, L, M, N, P) may be operated in "software differential" mode. Two A/D's are applied to the high and low legs of a single differential input channel. The two data values are then algebraically subtracted, either on the fly in real time or after all samples have been stored. Channel capacity in "software differential" is one-half the number of single-ended channels.

    This technique offers excellent bandwidth, high common mode rejection and optional mix of single-ended and differential channels.

Marker Input

When selected in the Command Register, the marker input is for tagging A/D samples to an external event such as a clock timebase. The marker sets bit 15 of the A/D word to logic "1" for one sample clock cycle. Lower A/D bits still retain sign extension polarity. This tag is now stored in the FIFO along with the A/D sample. The user may do this as often as needed, and the marker can be asynchronous with the A/D sample clock. Post processing software then searches through the saved data to find each marked sample. The marker bit is not available for 16-bit A/D's.

15	14 - 11	10 - 0
M	Sign/MSB	A/D Data

Marker input sets bit 15 = 1. Otherwise, bit 15 = 0.
(12-bit A/D shown)

Figure 2. Marker Sample Tagging

Artisan Technology Group - Quality Instrumentation ... Guaranteed | (888) 88-SOURCE | www.artisantg.com
Downloaded from DatasheetLib.com - datasheet search engine

A/D Data Format

A/D data is delivered as a stream from the FIFO memory. For multichannel inputs, this means that data is multiplexed by the channel address with a modulo address wrap-around at the top channel. For example, with 4-channel inputs, the output channel sequence is 0, 1, 2, 3, 0, 1, . . . One additional factor is that the 32-bit wide dual FIFO contains two A/D samples. Therefore the longword sequence is 0,1 . . . 2,3 . . . 0,1 . . .

The FIFO output can take two formats depending on which analog module is used and whether single-channel or autosequential (autoincrement) channel addressing is selected. For single-channel mode, data appears as follows:

31 16	15 0
Sample N+1	Sample N

If the addressing is selected for autoincrement, data appears this way:

31 16	15 0
Channel N+1	Channel N

Note that all A/D data is right-justified within the 16-bit data word with sign extension to bit 15 or 31. Also be aware that the PCI-416 uses “Intel” or little-endian addressing where lower (or earlier) data is lower in word memory.

Setup and A/D Collection Software

Software is available for Windows® 95/98, NT, MS-DOS, Hyperception and LabVIEW®. Source code is available for developers.

- Performs PCI BIOS verification and setup
- Automatically configures to the display adapter, CPU and memory
- Initializes the interrupt and bus master systems and D/A output
- Allocates base or extended memory
- Performs self-test and A/D-D/A calibration
- Configures A/D sample rate, frame rate and sample counter
- Selects trigger mode and bus master or I/O block transfer
- Selects disk file output format to integer binary
- Saves data to base memory, extended memory or disk
- Full source code in “C” and assembly is available

PCI-416 Hyperception Block Diagram Signal Processing System

Models PCI-416HYP and PCI-416HYPL.

- Advanced Windows 95/NT A/D conversion and data collection software library. Please refer to the PCI-416HYP/L data sheet.
- Object-oriented visual environment using graphical programming “Block Language” connecting icons.
- Ideal for fast simulations, modeling, prototyping.
- Powerful nested hierarchical capabilities - build your own icon library.
- Comprehensive screen graphics, printer support.
- Hundreds of DSP, FFT, filter, control, A/D and math functions.
- Optional “C” source code generation or integrate your own code.
- Two versions: PCI-416HYPL (“Block Lite”) includes almost 100 common functions. PCI-416HYP offers full library with several hundred operations.

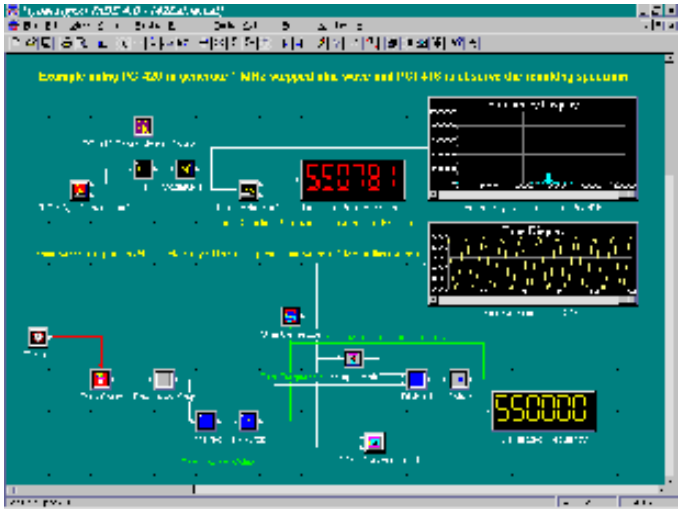

PCI-416HYP Screen Capture

Artisan Technology Group - Quality Instrumentation ... Guaranteed | (888) 88-SOURCE | www.artisantg.com

Downloaded from DatasheetLib.com - datasheet search engine

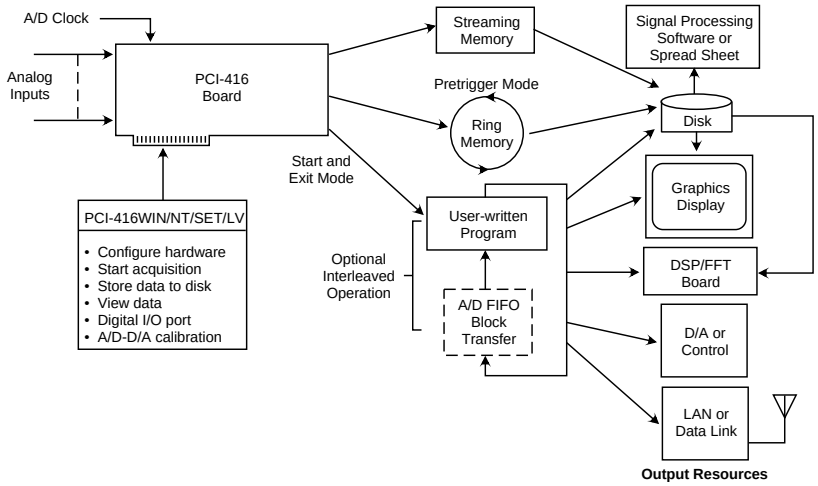

Figure 3. PCI-416 Software Data Flow

Pre/Post Trigger Transient Capture Applications

A certain class of applications requires data sampled relative to one or more external events. Data before and after the event need to be analyzed. If the exact time of those external events cannot be predicted accurately but the event can be identified with a trigger, data must be recorded continuously then processed after the event occurred. At higher sample rates, the user must use all memory storage, which has limited capacity, but is still large enough to capture the event. A ring buffer circular storage method is used in which new samples continually overwrite the oldest samples.

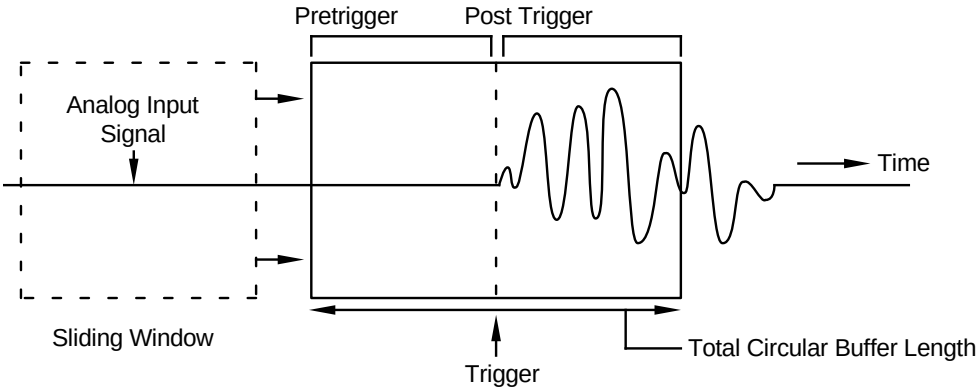

Figure 4. Transient Signal Capture

The PCI-416 accepts either a digital or analog (threshold trip) event trigger. An on-board D/A converter sets the comparator voltage level for the analog trigger. The system stores data before and after the trigger. A post trigger sample counter selects the number of offset samples after the trigger. The number of pretrigger samples equals the total circular storage minus the post trigger size. Note that pretrigger samples in Figure 5 are skewed over the buffer tail.

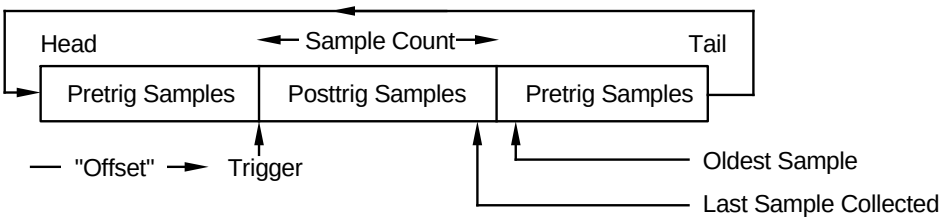

Figure 5. A/D Data Ring Buffering

A/D collection continues after the trigger until the system has stored the number of samples specified in the sample counter. The trigger sample can be found using backwards circular offset from the last sample saved. Multiple external events can be identified using a combination of the post trigger method and the marker inputs.

Special software available for the PCI-416 can access huge PCI memory. This requires the 80486 or Pentium CPU to enter protected mode and transfer the data. Collected A/D samples can then be saved to disk or tape.

Artisan Technology Group - Quality Instrumentation ... Guaranteed | (888) 88-SOURCE | www.artisantg.com
Downloaded from DatasheetLib.com - datasheet search engine

Highly Parallel Array Sampling

Although the F, G, J,K, L, and N models of the PCI-416 offer unique high-performance simultaneous-sampling capabilities, this can be extended by connecting several PCI-416's in parallel. A master PCI-416 can distribute its internal trigger signal to several other 416's for concurrent sampling with practically no phase lag. Applications include sensor arrays, astrophysics, biomedical sampling, engine cells, multichannel audio, and aerospace structure testing.

Two interconnection methods accommodate either externally or internally triggered applications. External triggers simply connect in parallel to all PCI-416's. Each board is armed with its sample count and clocking systems to perform parallel sampling. Only one board sends interrupts. When data is ready, the host computer rapidly retrieves data blocks from each board in sequence.

For internal triggers, one board is the master generating triggers for itself and for all other boards. Slave 416's attach to the master 416's trigger output connection.

Trigger and Sample Count Systems

The PCI-416 accepts one of three triggers - external analog, internal or external digital. All three initiate identical internal actions. For the internally generated trigger, either a single trigger can be accepted ("single trigger mode") or the trigger can repeat ("continuous trigger mode") with programmable delays between each trigger.

Internal trigger rates are independent from but synchronous to the internal programmable A/D clock rate. The trigger starts a frame of samples. Each frame can be from one to 16,777,216 samples using the 24-bit counter. The system will collect the number of samples in the sample counter then stop and wait for the next trigger. Meanwhile, the sample counter will automatically reload in anticipation of the next trigger. This sample counter may be disabled by software for non-stop continuous streaming past 16 megasamples after the trigger. Data flows into the FIFO memory which will notify the host that it has data to be saved. The FIFO size is independent of the frame size, therefore FIFO flags will occur separately from the sample counter.

A PCI bus interrupt can be generated after each frame completes (the "ACQuire" interrupt), or at each FIFO half full signal. Interrupt is also available after each bus master block transfer.

Three basic trigger modes are offered. A single trigger will start one frame then stop. The continuous trigger mode will generate repeating frames. In the last "forever" mode, the sample counter is disabled. A single trigger will start sampling indefinitely. The host computer must then externally decide when to stop sampling.

The PCI-416 will automatically control its own channel addressing such that the address advances immediately as a sample is sent to the FIFO. In single-channel mode, each frame will consist of data from only the selected channel. In automatic sequential addressing ("autoincrement"), the frame will contain one or more scans of channels, with addresses automatically wrapping around according to the channel capacity of the analog module.

The combination of programmable sample count, frame rate, A/D rate, and channel addressing mean that practically all conceivable applications can be done. The basic system timing is shown in Figure 8.

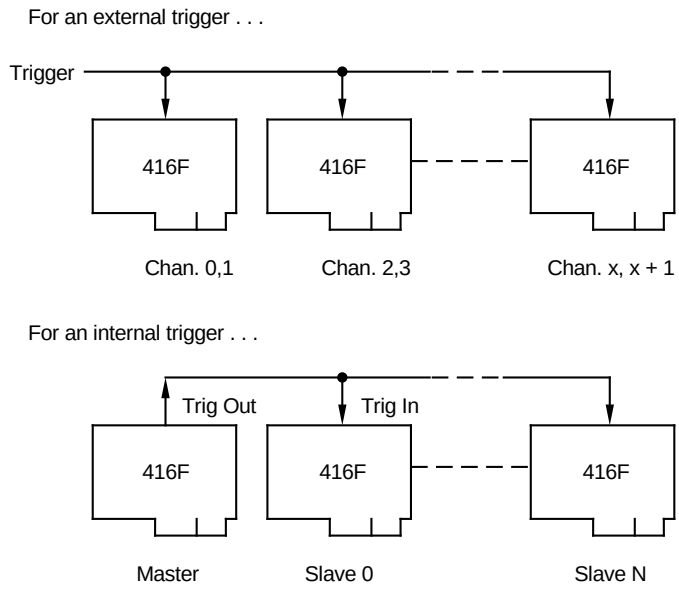

Figure 6. Highly Parallel Simultaneous Sampling

System Throughput

All specifications listed here describe performance available on the *board*. Actual transfer rates out to system memory, disk, network, or other data destinations depend on many other factors. These include the memory type and memory controller, host software Operating System, disk interface, number of disk drives, buffer sizes, type of disk controller, number and method of simultaneous applications, DMA usage, CPU type and speed, bus loading, software design, etc. It is not practical to state a single set of performance specifications for the total *system* however, DATEL can give you guidelines for a specific configuration. For speed-critical applications, the full system must be thoroughly tested to develop actual performance.

Artisan Technology Group - Quality Instrumentation ... Guaranteed | (888) 88-SOURCE | www.artisantg.com
Downloaded from DatasheetLib.com - datasheet search engine

Start and Exit Mode

For applications which need the data streaming continuously to external software, the extensive library functions can easily be interleaved with user-written code. A special “start and exit” mode in PCI-416SET simply configures the board via menus, starts A/D conversion then exits to the operating system without saving any data. Next, the user’s following program (usually in a batch file) retrieves data directly from the on-board registers or via 32-bit bus master mode. This is simple to program and very high speed. This data collection program may loop back repeatedly to get fast blocks of data and the PCI-416 continues filling the FIFO while the user program runs. This is true concurrent coprocessing with no lost data.

Start and exit mode offers a high degree of control over the board while avoiding time-comsuming menu design and coding. The system will even wait for an external trigger, giving time to set up the data collection program. Start and exit mode can be saved to automatically run, like all other PCI-416SET applications. A typical program flow for start and exit is shown:

1. SETUP PCI-416 board.
2. Save configuration to disk.
3. Start A/D and exit to MS-DOS (the A/D stays running).
   <start of user’s program>
   LOOP:
4. If the FIFO overflowed, process the error.
5. Move block of A/D data from FIFO to host memory.
6. Do other processing on A/D data block (math, disk, display, etc.).
7. If more data is needed, GO TO LOOP.
8. Else, stop the A/D and quit.

The “Do other processing ...” step is a program written by the user. Notice that the PCI-416 continues with non-stop A/D sampling during this step.

Besides being a fast data recorder, PCI-416SET also performs register tests to verify proper board operation. In addition, PCI-416SET does calibration using an external dc voltage source, loads data into the D/A channel and exercises the digital I/O port.

The source code may be modified by the user (or by DATEL under special order) to adapt to any conceivable function.

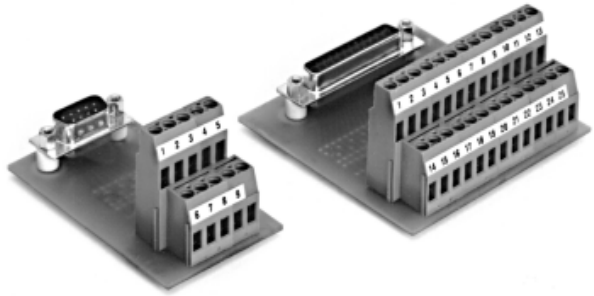

Figure 7. PC-490A and PC-490B D-Connector to Screw Terminal Adapters

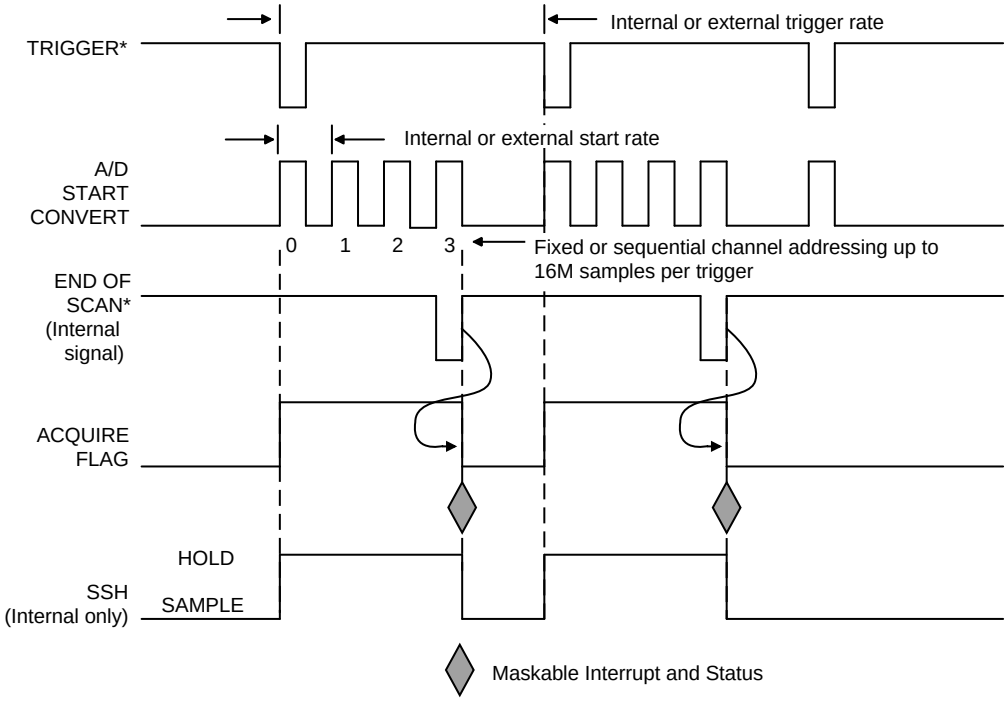

Figure 8. PCI-416 Timing Diagram

Artisan Technology Group - Quality Instrumentation ... Guaranteed | (888) 88-SOURCE | www.artisantg.com
Downloaded from DatasheetLib.com - datasheet search engine

ORDERING INFORMATION

Hardware:

PCI-416 ___ 2 ___

Input Channels, A/D Resolution

B = 4SE chans., 14 bits	J = 8SE simul. chans., 12 bits
D = 1D chan., 12 bits	K = 2SE simul. chans., 12 bits
E = 16SE/8D chans., 12 bits	L = 16SE simul. chans., 12 bits
F = 2SE simul. chans., 12 bits	M = 4SE simul. chans., 16 bits
G = 2SE simul. chans., 14 bits	N = 2SE simul. chans., 14 bits
H = 1D chan., 12 bits	P = 4SE simul. chans., 14 bits

FIFO Memory Size

2 = 8k A/D samples

Analog Input Polarity

A = Bipolar or selectable
B = Unipolar
For all models with user-selectable input polarity, use the "A" designator.
Caution: Read the input range specifications carefully.

Example: PCI-416G2A 2SE simul. input channels, 2 14-bit 1MHz A/D's, 8k FIFO, ±5V input
Each board is power-cycle burned-in, tested and calibrated. All models include a user's manual.

61-7342340	SMA male to BNC male coaxial cable, 1 meter length. One cable required per channel.
PC-490B	DB-25 screw termination adapter (cable not included). Not recommended for high-frequency signals.
PCI-30259	PCI-416 less A/D module. Accepts 16-bit high-speed digital input and strobe at the module sockets.
PCI-30264	PCI-416J2 with 380kHz sampling per channel.
PCI-30267	PCI-416G2A with 2MHz sampling per channel.
UM-PCI-416	Spare user manual. One is included with board.

Software:

PCI-416SRC PCI-416SET	Setup/configuration data-collection program for MS-DOS. Includes "C" and assembly source code and executables. Model PCI-416SET are executable.
PCI-416WIN, WINS	Setup and data collection program for Windows 95. The source (PCI-416WINS) uses Borland C++ Builder and Visual C for the DLL and device driver.
PCI-416NT, NTS	Windows NT version of PCI-416SET/SRC. The full source code (PCI-416NTS) includes the executables (PCI-416NT). Consists of a user interface, DLL, and device driver.
PCI-416LV, LVS	Bridge driver software to National Instruments' LabVIEW® (executables only). LabVIEW must be purchased separately from National Instruments. Model PCI-416LVS is the source code to PCI-416LV.
PCI-416HYP, HYPL	Hypersignal Block Diagram advanced signal processing system for Windows® 95/NT. See data sheet.

Free Visual BASIC example software is available on request.

Note: Software is *not* included with the board. It should be added to your board order. Full software support is available only with board purchase. All sources also include the binary executables.

Models with miniature threaded coaxial SMA connectors*.

Model Number	Number of Channels	A/D Resolution	Equivalent Root Model
PCI-30379	4SE	12 bits	PCI-416C2
PCI-30357	2SE simultaneous	12 bits	PCI-416F2
PCI-30352	2SE simultaneous	14 bits	PCI-416G2B
PCI-30343	1D	12 bits	PCI-416H2
PCI-30374	2SE simultaneous	12 bits	PCI-416K2B
PCI-30439	2SE simultaneous	12 bits	PCI-416K2A
PCI-30444	2SE simultaneous	14 bits	PCI-416N2
PCI-30447	4SE simultaneous	16 bits	PCI-416M2
PCI-416P2	4SE simultaneous	14 bits	see note

(The PCI-416P2 *always* includes SMA connectors.)
*Functional specifications are identical to the root model.

Pentium is an Intel trademark
Windows and MS-DOS are Microsoft trademarks
LabVIEW is a National Instruments trademark

Artisan Technology Group - Quality Instrumentation ... Guaranteed | (888) 88-SOURCE | www.artisantg.com
Downloaded from DatasheetLib.com - datasheet search engine

Artisan Technology Group

Artisan Technology Group is your source for quality new and certified-used/pre-owned equipment

- FAST SHIPPING AND DELIVERY
- TENS OF THOUSANDS OF IN-STOCK ITEMS
- EQUIPMENT DEMOS
- HUNDREDS OF MANUFACTURERS SUPPORTED
- LEASING/MONTHLY RENTALS
- ITAR CERTIFIED SECURE ASSET SOLUTIONS

SERVICE CENTER REPAIRS
Experienced engineers and technicians on staff at our full-service, in-house repair center

InstraView℠ REMOTE INSPECTION
Remotely inspect equipment before purchasing with our interactive website at ***www.instraview.com*** ↗

WE BUY USED EQUIPMENT
Sell your excess, underutilized, and idle used equipment
We also offer credit for buy-backs and trade-ins
www.artisantg.com/WeBuyEquipment ↗

LOOKING FOR MORE INFORMATION?
Visit us on the web at ***www.artisantg.com*** ↗ for more information on price quotations, drivers, technical specifications, manuals, and documentation

Contact us: (888) 88-SOURCE | sales@artisantg.com | www.artisantg.com