Artisan Technology Group

Artisan Technology Group is your source for quality new and certified-used/pre-owned equipment

- FAST SHIPPING AND DELIVERY
- TENS OF THOUSANDS OF IN-STOCK ITEMS
- EQUIPMENT DEMOS
- HUNDREDS OF MANUFACTURERS SUPPORTED
- LEASING/MONTHLY RENTALS
- ITAR CERTIFIED SECURE ASSET SOLUTIONS

SERVICE CENTER REPAIRS
Experienced engineers and technicians on staff at our full-service, in-house repair center

InstraView℠ REMOTE INSPECTION
Remotely inspect equipment before purchasing with our interactive website at ***www.instraview.com*** ↗

WE BUY USED EQUIPMENT
Sell your excess, underutilized, and idle used equipment
We also offer credit for buy-backs and trade-ins
www.artisantg.com/WeBuyEquipment ↗

LOOKING FOR MORE INFORMATION?
Visit us on the web at ***www.artisantg.com*** ↗ for more information on price quotations, drivers, technical specifications, manuals, and documentation

Contact us: (888) 88-SOURCE | sales@artisantg.com | www.artisantg.com

5600 Series
High Power Laser Diode Driver
User's Manual

Artisan Technology Group - Quality Instrumentation ... Guaranteed | (888) 88-SOURCE | www.artisantg.com

Certificate No.: FM 27207

Newport Corporation, Irvine, California, has been certified compliant with ISO 9002 by the British Standards Institution.

Corporate Headquarters
Newport Corporation
1791 Deere Avenue
Irvine, CA 92714
Telephone: 949-863-3144
Facsimile: 949-253-1800

Belgium
Telephone: 016-402927
Facsimile: 016-402227

Canada
Telephone: 905-567-0390
Facsimile: 905-567-0392

France
Telephone: 1-60 91 68 68
Facsimile: 1-60 91 68 69

Germany
Telephone: 06151-36 21-0
Facsimile: 06151-36 21-52

Italy
Telephone: 02-924-5518
Facsimile: 02-923-2448

Japan
Telephone: 03-5379-0261
Facsimile: 03-5379-0155

Netherlands
Telephone: 030-6592111
Facsimile: 030-6570242

Switzerland
Telephone: 01-740-2283
Facsimile: 01-740-2503

Taiwon R.O.C.
Telephone: 2-2769-9796
Facsimile: 2-2769-9638

United Kingdom
Telephone: 01635-521757
Facsimile: 01635-521348

Artisan Technology Group - Quality Instrumentation ... Guaranteed | (888) 88-SOURCE | www.artisantg.com

Limited Warranty

Newport warrants that this product will be free from defects in materials and workmanship for a period of two years from the date of shipment. If any such product proves defective during the applicable warranty period, Newport, at its option, either will repair the defective product with charge for parts and labor or will provide a replacement in exchange for the defective product.

In order to obtain service under this warranty, the customer must notify Newport of the defect before the expiration of the warranty period and make suitable arrangements for the performance of service. In all cases the customer will be responsible for packaging and shipping the defective product back to the service center specified by Newport, with shipping charges prepaid. Newport shall pay for the return of the product to the customer if the shipment is within the continental United States, otherwise the customer shall be responsible for all shipping charges, insurance, duties and taxes, if the product is returned to any other location.

This warranty shall not apply to any defect, failure or damage caused by improper use or failure to observe proper operating procedures per the product specification or operators manual or improper or inadequate maintenance and care. Newport shall not be obligated to furnish service under this warranty 1) to repair damage resulting from attempts by personnel other than Newport's representatives to repair or service the product; 2) to repair damage resulting from improper use or connection to incompatible equipment; 3) to repair damage resulting from operation outside of the operating or environmental specifications of the product.

NEWPORT'S LIABILITY FOR THE MERCHANTABILITY AND USE OF THE PRODUCT IS EXPRESSLY LIMITED TO ITS WARRANTY SET OUT ABOVE. THIS DISCLAIMER AND LIMITED WARRANTY IS EXPRESSLY IN LIEU OF ANY AND ALL REPRESENTATIONS AND WARRANTIES EXPRESS OR IMPLIED, INCLUDING BUT NOT LIMITED TO, ANY IMPLIED WARRANTY OF MERCHANTABILITY OR OF FITNESS FOR PARTICULAR PURPOSE, WHETHER ARISING FROM STATUTE, COMMON LAW, CUSTOM OR OTHERWISE. THE REMEDY SET FORTH IN THIS DISCLAIMER AND LIMITED WARRANTY SHALL BE THE EXCLUSIVE REMEDIES AVAILABLE TO ANY PERSON. NEWPORT SHALL NOT BE LIABLE FOR ANY SPECIAL, DIRECT, INDIRECT, INCIDENTAL OR CONSEQUENTIAL DAMAGES RESULTING FROM THE USE OF THIS PRODUCT OR CAUSED BY THE DEFECT, FAILURE OR MALFUNCTION OF THIS PRODUCT, NOR ANY OTHER LOSSES OR INJURIES, WHETHER A CLAIM FOR SUCH DAMAGES, LOSSES OR INJURIES IS BASED UPON WARRANTY, CONTRACT, NEGLIGENCE, OR OTHERWISE. BY ACCEPTING DELIVERY OF THIS PRODUCT, THE PURCHASER EXPRESSLY WAIVES ALL OTHER SUCH POSSIBLE WARRANTIES, LIABILITIES AND REMEDIES. NEWPORT AND PURCHASER EXPRESSLY AGREE THAT THE SALE HEREUNDER IS FOR COMMERCIAL OR INDUSTRIAL USE ONLY AND NOT FOR CONSUMER USES AS DEFINED BY THE MAGNUSOM-MOSS WARRANTY ACT OR SIMILAR STATE CONSUMER WARRANTY STATUTE.

©1998, Newport Corporation
Irvine, California, USA
Part No. 26788
IN-10982
Rev. A
Printed 10-Apr-00

Artisan Technology Group - Quality Instrumentation ... Guaranteed | (888) 88-SOURCE | www.artisantg.com

EC DECLARATION OF CONFORMITY

5600 Series High Power Laser Diode Driver

We declare that the accompanying product, identified with the "CE" mark, meets all relevant requirements of Directive 89/336/EEC and Low Voltage Directive 73/23/EEC.

Compliance was demonstrated to the following specifications:

EN50081-1 EMISSIONS:

Radiated and conducted emissions per EN55011, Group 1, Class A

EN50082-1 IMMUNITY:

Electrostatic Discharge per IEC 1000-4-2, severity level 3
Rated Emission Immunity per IEC 1000-4-3, severity level 2
Fast Burst Transients per IEC 1000-4-4, severity level 3
Surge Immunity per IEC 1000-4-5, severity level 3

IEC SAFETY:

Safety requirements for electrical equipment specified in IEC 1010-1.

Alain Danielo

VP European Operations
Zone Industrielle
4534 Beaune-la-Rolande, France

Jeff Cannon

General Manager-Precision Systems
1791 Deere Avenue
Irvine, Ca. USA

Artisan Technology Group - Quality Instrumentation ... Guaranteed | (888) 88-SOURCE | www.artisantg.com

Table of Contents

1. General Information ***1***

1.1 Introduction **1**

1.2 Product Overview **1**

1.3 Available Options and Accessories **2**

1.4 Safety Terms and Symbols **2**

1.4.1 Terms 2

1.4.2 Symbols 3

1.5 General Warnings and Cautions **3**

2. System Operation ***5***

2.1 Introduction **5**

2.2 Installation **5**

2.2.1 AC Power Considerations 5

2.2.2 Tilt-Foot Adjustment 6

2.2.3 Rack Mounting 6

2.2.4 Ventilation Requirements 6

2.2.5 Power-Up Sequence 6

2.2.6 Quick Start 6

2.3 Introduction to the 5600 Front Panel **7**

2.3.1 Model 5600 7

2.4 General Operation **8**

2.4.1 Display Elements 8

2.4.1.1 Static Fields 8

2.4.1.2 Non-Editable Data Fields 8

2.4.1.3 Editable Data Fields 8

2.4.1.3.1 Changing Data Fields 9

2.4.1.4 Controls 9

2.4.2 Main Screen 10

2.4.3 Menu Structure 10

2.4.3.1 Laser Setup Menu 10

2.4.3.2 Modulation Setup Menu 10

2.4.3.3 Communications Menu 11

2.4.3.4 System Menu 12

2.4.3.4.1 Calibration Menu 13

2.4.3.5 Save/Recall Menu 13

Artisan Technology Group - Quality Instrumentation ... Guaranteed | (888) 88-SOURCE | www.artisantg.com

2.5 Rear Panel Familiarization 14
2.5.1 RS-232 Connector 14
2.5.2 GPIB Connector 14
2.5.3 Modulation Input BNC Connector 15
2.5.4 Current Monitor BNC Connector 15
2.5.5 Detector Input BNC Connector 15
2.5.6 LDD Output Connector 15
2.5.7 Input Power Connector 15
2.5.8 GND Post 15
2.5.9 Trigger Input BNC Connector 16
2.5.10 Trigger Output BNC Connector 16
2.5.11 Interlock/Detector Connector 16

2.6 Warm Up and Environmental Consideration 16

3. Laser Diode Driver Operation 17

3.1 CW/QCW Laser Diode Driver 17
3.1.1 Introduction 17
3.1.2 Laser Diode Protection Requirements 17

3.2 Laser Safety Features 19
3.2.1 Conditions Which Can Automatically Shut Off the Laser Output. 19
3.2.2 Key switch interlock 19
3.2.3 Lockout Dial Button 20
3.2.4 Turn On Delay 20

3.3 The Laser Connectors 20
3.3.1 External Modulation BNC 21
3.3.2 Detector BNC 21
3.3.3 Interlock 21
3.3.4 Aux. Thermistor 21

3.4 Connecting to Your Laser 22
3.4.1 Laser Diode Connections and Shielding 22
3.4.2 Detector Feedback Connections 24
3.4.3 Grounding Consideration 24

3.5 Laser Driver Operation 24
3.5.1 Quick Start 24
3.5.2 Laser Main Screen 24
3.5.3 Laser Setup Menu 25
3.5.3.1 Mode 26
3.5.3.2 Io Lim 27
3.5.3.3 Vcomp 27
3.5.3.4 Im Lim 28
3.5.3.5 Po Lim 28
3.5.3.6 Tol Time and Tol Iop 28
3.5.3.7 Taux 28
3.5.3.8 Tamb 28

Artisan Technology Group - Quality Instrumentation ... Guaranteed | (888) 88-SOURCE | www.artisantg.com

3.5.3.9 Ths 28
3.5.3.10 Vlas 28
3.5.3.11 Vf Loss 29
3.5.3.12 Pulse Enable 29
3.5.3.13 Pulse Width 29
3.5.3.14 Pulse Rate 29
3.5.3.15 Duty Cycle 29
3.5.3.16 PD Resp 29
3.5.3.17 PD Zero 29
3.5.4 Modulation Setup Menu 29
3.5.4.1 Modulation Enable (Mod Enable) 30
3.5.4.2 Frequency (Freq) 30
3.5.4.3 Modulation Type (Mod Type) 30
3.5.4.4 Modulation Amplitude (Mod Amp) 30
3.5.4.5 Io min and Io max 31

4. Principles of Operation 33

4.1 Introduction 33

4.2 Laser Driver Theory of Operation 33
4.2.1 Laser Interface 34
4.2.2 Limit DAC 35
4.2.3 Set Point DAC 35
4.2.4 A/D Converter 35
4.2.5 Current Source Voltage 35
4.2.6 Output Shorting 35
4.2.7 Modulation Input Port 35
4.2.8 Photodiode Feedback Amplifier 36
4.2.9 Constant Current, High Bandwidth Mode 36
4.2.10 Constant Current, Low Bandwidth Mode 36
4.2.11 Constant Power Mode 38
4.2.12 Internal Modulation 38
4.2.13 Pulse Generator 38

4.3 Microprocessor Board 39
4.3.1 Microprocessor 39
4.3.2 Memory 40
4.3.3 Laser Interface 40
4.3.4 Front Panel Interface 40
4.3.5 GPIB Interface 40
4.3.6 RS-232 Serial Interface 40

4.4 Power Supplies 40
4.4.1 LDD Power Supplies 40
4.4.2 CPU Supply 41

4.5 Interlock Operation 41
4.5.1 Laser Interlock 41

Artisan Technology Group - Quality Instrumentation ... Guaranteed | (888) 88-SOURCE | www.artisantg.com

5. Tips and Techniques ____ *43*

5.1 Introduction ____ **43**

5.2 Laser Limits ____ **43**

5.3 Modulating ____ **44**

5.3.1 Grounding with Modulation ____ 45

5.3.2 Current Limit when Modulating ____ 45

5.4 Grounding A Laser Diode ____ **46**

5.5 Noise Specifications ____ **47**

5.6 Intermittent Contact Feature ____ **47**

5.7 V_f Measurements ____ **47**

6. Maintenance ____ *49*

6.1 Introduction ____ **49**

6.2 Fuse Replacement ____ **49**

6.3 Cleaning ____ **49**

7. Calibration ____ *51*

7.1 Calibration Overview ____ **51**

7.1.1 Environmental Conditions ____ 51

7.1.2 Warm-Up ____ 51

7.2 Laser Calibration ____ **51**

7.2.1 Recommended Equipment ____ 51

7.2.2 Local Operation Current Source Calibration ____ 52

7.2.3 Remote Operation Current Source Calibration ____ 53

7.2.4 Local Operation I_{PD} Current Calibration ____ 54

7.2.5 Remote Operation I_{PD} Current Calibration ____ 55

7.2.6 Local Operation Laser Voltage Measurement Calibration ____ 57

7.2.7 Remote Operation Laser Voltage Measurement Calibration ____ 58

7.2.8 Local Operation Pulse Width and Frequency Calibration ____ 59

7.2.9 Remote Operation Pulse Width and Frequency Calibration ____ 60

8. Factory Service ____ *61*

8.1 Introduction ____ **61**

8.2 Obtaining Service ____ **61**

9. Error Messages ____ *65*

9.1 Introduction ____ **65**

10. Specifications ____ *67*

Artisan Technology Group - Quality Instrumentation ... Guaranteed | (888) 88-SOURCE | www.artisantg.com

Tables

Table 1 - Laser Connector Pinouts 20
Table 2 - Recommended Test Equipment 51
Table 3 - Error Codes 65

Figures

Figure 1 - Model 5600 Front Panel 7
Figure 2 - Main Screen 10
Figure 3 - Communications Menu 11
Figure 4 - System Configure Menu 12
Figure 5 - Calibration Menu 13
Figure 6 - Save/Recall Menu 13
Figure 7 - Rear Panel 14
Figure 8 - Laser Diode Protection Circuit 19
Figure 9 - Main Screen 24
Figure 10 - Laser Setup Menu 26
Figure 11 - Modulation Setup Menu 30
Figure 12 - 5600 Block Diagram 33
Figure 13 - Laser Driver Block Diagram 34
Figure 14 - Constant Current - High Bandwidth Mode 36
Figure 15 - Constant Current - Low Bandwidth Mode 37
Figure 16 - Constant Power Mode 38
Figure 17 - Microprocessor Board Block Diagram 39
Figure 18 - Power Supply Block Diagram 41
Figure 19 - Current Limit Example 46
Figure 20 - I_{PD} Calibration Circuit 54

Artisan Technology Group - Quality Instrumentation ... Guaranteed | (888) 88-SOURCE | www.artisantg.com

Artisan Technology Group - Quality Instrumentation ... Guaranteed | (888) 88-SOURCE | www.artisantg.com

C H A P T E R 1

1. General Information

1.1 Introduction

This chapter describes the features, options, accessories, and specifications of the Model 5600.

1.2 Product Overview

PRODUCT FEATURES

- ❑ Stand alone operation
- ❑ GPIB/IEEE 488.2 and RS-232C Interfaces
- ❑ Full 16-bit control and characterization capabilities
- ❑ Laser Diode Driver (LDD)
  - 10, 20, 40 or 65A CW/QCW
  - Internal and External analog modulation
  - Photodiode with reverse bias or Thermopile inputs
  - Comprehensive laser diode protection features

The Model 5600 Laser Diode Driver is a result of Newport's continuing commitment to provide advanced laser diode instrumentation at affordable prices.

Full Featured LDD Offer Complete Test and Characterization Capabilities

Advanced circuit designs and careful layout of laser diode drivers provide you with an extremely low noise, highly stable output current. External analog modulation input allows precision control of the laser output for a variety of applications including power level control and wavelength tuning. An internal sine or square wave modulator is also available. A monitor photodiode is reversed biased at 5 Volts. All laser diode parameters are accessible with 16-bit resolution including the laser diode's forward voltage for full characterization.

Comprehensive Safety Features Protect Your Laser Diode

Time tested laser diode protection safety features are incorporated into the Laser Diode Driver. Input power module filters provide first stage protection

Artisan Technology Group - Quality Instrumentation ... Guaranteed | (888) 88-SOURCE | www.artisantg.com

against transients. Additional filtering and power regulation stages coupled with high speed transient detection circuits let you operate your laser diode worry-free from transients. A slow turn-on sequence, multiple output shorting circuits, and an independent current limiting feature provide the superior protection you demand from all your laser diode instrumentation.

Intuitive Controls and Character LCD Display Simplify Control and Test Procedures

Improved data presentation and system control are achieved using a character LCD display. Control of the output is accomplished either by entering the set point via the cursor keys or control dial. MENU keys access saved system configurations and repetitive procedures. All controls are clearly marked and instructions easily understood for simple operation.

GPIB/IEEE-488.2 and RS232 Interfaces Gives Power to Remotely Control and Collect Data.

For ultimate control a GPIB/IEEE-488.2 interface is available. All control and measurement functions are accessible via the GPIB interface. In addition, standard serial RS-232C ports allow simpler interfacing to a PC.

1.3 Available Options and Accessories

Accessories

5600-02	Laser Diode 1 Meter Driver Cable
5600-04	Laser Diode 1 Meter Driver/Mount Cable
5600-RACK	Rack Mount Kit

Newport Corporation also supplies temperature controlled mounts, lenses, and other accessories. Please consult with your representative for additional information.

1.4 Safety Terms and Symbols

1.4.1 Terms

The following safety terms are used in this manual:

The **WARNING** heading in this manual explains dangers that could result in personal injury or death.

Artisan Technology Group - Quality Instrumentation ... Guaranteed | (888) 88-SOURCE | www.artisantg.com

The **CAUTION** heading in this manual explains hazards that could damage the instrument.

In addition, a **NOTES** heading gives information to the user that may be beneficial in the use of this instrument.

1.4.2 Symbols

The following symbols are used in this manual and on the instrument:

Power Off

Power On

Caution - Refer to the documentation

Protected Earth Ground

Risk of Electric Shock

1.5 General Warnings and Cautions

The following general warning and cautions are applicable to this instrument:

WARNING

This instrument is intended for use by qualified personnel who recognize shock hazards or laser hazards and are familiar with safety precautions required to avoid possible injury. Read the instruction manual thoroughly before using, to become familiar with the instrument's operations and capabilities.

Artisan Technology Group - Quality Instrumentation ... Guaranteed | (888) 88-SOURCE | www.artisantg.com

WARNING

The American National Safety Institute (ANSI) states that a shock hazard exists when probes or sensors are exposed to voltage levels greater then 42 VDC or 42V peak AC. Do not exceed 42V between any portion of the Model 5600 (or any attached detector or probe) and earth ground or a shock hazard will result.

CAUTION

There are no serviceable parts inside the Model 5600. Work performed by persons not authorized by Newport Corporation may void the warranty. For instructions on obtaining warranty repair or service please refer to Chapter 8 of this manual.

Artisan Technology Group - Quality Instrumentation ... Guaranteed | (888) 88-SOURCE | www.artisantg.com

C H A P T E R 2

2. System Operation

2.1 Introduction

This chapter describes how to operate the 5600 Laser Diode Driver.

2.2 Installation

CAUTION
Although ESD protection is designed into the 5600, operation in a static-fee work area is recommended.

2.2.1 AC Power Considerations

The 5600 can be configured to operate at a nominal line voltage of 100, 120, 220, or 240 VAC. Normally, this is done at the factory and need not be changed before operating the instrument. However, be sure that the voltage setting is correct on the power input module and correct fuses are installed per section 6.2 before connecting to an AC source. The 5600 is shipped set for 120 VAC and a caution sticker is placed on the input power connector.

CAUTION
Do not exceed 250VAC on the line input.

Do not operate with a line voltage that is not within ±10% of the line setting. Too low of an input voltage may cause excessive ripple on the DC supplies. Too high of an input voltage will cause excessive heating.

WARNING
To avoid electrical shock hazard, connect the instrument to properly earth-grounded, 3-prong receptacles only. Failure to observe this precaution can result in severe injury or death.

Artisan Technology Group - Quality Instrumentation ... Guaranteed | (888) 88-SOURCE | www.artisantg.com

2.2.2 Tilt-Foot Adjustment

The 5600 has front legs that extend to make it easier to view the LCD display. To use them, place the 5600 on a stable base and rotate the legs downward until they lock into position.

2.2.3 Rack Mounting

The 5600 may be rack mounted by using a 5600 rack mount kit. All rack mount accessory kits contain detailed mounting instructions.

2.2.4 Ventilation Requirements

Rear panel area needs 2 to 4 inches of clearance for air circulation.

2.2.5 Power-Up Sequence

With the 5600 connected to an AC power source, set the power switch to "**I**" to supply power to the instrument and start the power-up sequence.

During the power-up sequence, the initialization screen is displayed. The software version is displayed in the lower left corner of the screen. During this time a self-test is performed to ensure that the 5600 hardware and software are communicating. If the 5600 cannot successfully complete this test, an error message will be displayed.

After this test, the 5600 is configured to the state it was in when the power was last shut off and displays the main display.

2.2.6 Quick Start

After the power-on sequence is complete, the 5600 goes to the laser display. To set up the laser driver, press the **MENU** button, then select laser setup. At this point, the display shows all laser parameters. Using the cursor keys and dial, select the desired functions and set the parameter values. When finished, return to laser display by pressing the **MENU** button.

Enter the desired set point value using the cursor keys or the dial. Press the **LDD ON** button to operate the laser. The LED illuminates to indicate laser operation. To turn the laser off, press the **LDD ON** button.

Artisan Technology Group - Quality Instrumentation ... Guaranteed | (888) 88-SOURCE | www.artisantg.com

2.3 Introduction to the 5600 Front Panel

2.3.1 Model 5600

Described below are the functions of each area of the Model 5600 front panel, as shown in Figure 1.

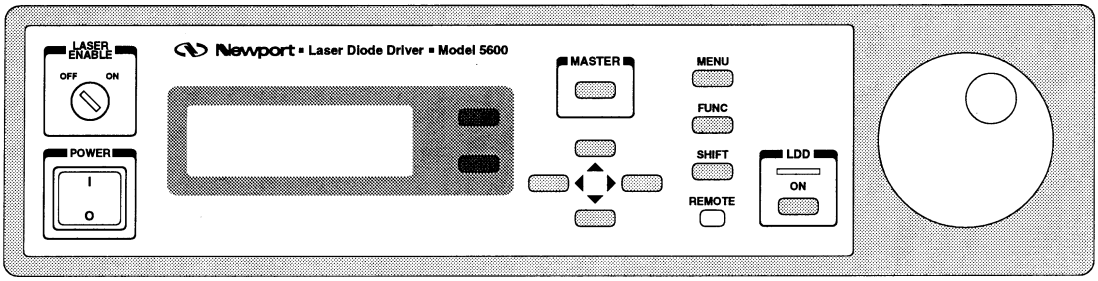

Figure 1 - Model 5600 Front Panel

1. **Power |/O Switch** - Switches on (|) or off (**O**) the AC power to the unit.
2. **Remote LED** - Indicator will light to show when the unit is being computer controlled. See section 2.4.3.3 for additional information on remote mode.
3. **Laser Active LED** - Indicates laser output is on.
4. **LDD On Button** - Turns the laser output on/off.
5. **Cursor Control Keys** – The four cursor keys located below the **MASTER** button moves the cursor up or down between editable data fields. The left arrow decrements values in numerical entry fields, or as a previous choice in a multi-choice entry field. The right arrow increments values in numerical entry fields, or as a next choice in multi-choice entry fields. See section 2.4.1.3 for a description of data fields.
6. **MENU Key** - Switches to the menu from the main screen, or back to the main screen from the menu (see section 2.4).
7. **Dial** – The large dial located to the right of the **LDD On** button is used to continuously vary certain parameters. The dial has an acceleration factor that causes the rate of change to increase as the dial is turned faster. Turning slowly allows for a fine adjustment at the smallest displayed decimal place.
8. **Keyswitch** - Laser safety keyswitch.
9. **Master Key**- switches to the master display from any screen in the system.

Artisan Technology Group - Quality Instrumentation ... Guaranteed | (888) 88-SOURCE | www.artisantg.com

10. **Function Key**- Used to execute user macros and special functions.
11. **Shift Key**- Toggles between the outer and inner set of soft keys.
12. **Soft Keys(2)**- These are the two dark keys located to the right of the display. The function of these keys varies depending on what menu is displayed.

2.4 General Operation

2.4.1 Display Elements

The Model 5600 uses a character display to depict information about the current state of the system. The display can be broken down into four basic elements: static fields, non-editable data fields, editable data fields, and controls.

2.4.1.1 Static Fields

Static fields are elements on the display which do not change from moment to moment. These can include screen titles and error messages.

2.4.1.2 Non-Editable Data Fields

Non-editable data fields are used mainly to display read back information, such as laser current, voltage, etc. These fields can have a prefix or suffix label, such as "**Io=**" or "**mA**", and are periodically updated by the system.

2.4.1.3 Editable Data Fields

Editable data fields are used for laser and system settings such as current set point, voltage limit, display contrast, etc. An editable field has three distinct display states: focused, non-focused, and read-only.

The focused state indicates that the field has the input "focus." When the field has the focus, a right pointing arrow (→) is placed to the left of the field. Any keyboard entry or dial adjustment will be applied to the field, and only one field at a time on the display can have focus. Move between fields using the up and down arrow keys.

The non-focused state indicates that the field is editable, but does not currently have the focus. These fields are indicated with a right pointing triangle (‣) to the left of the field. Using the up and down arrows, focus can be moved to these fields.

Artisan Technology Group - Quality Instrumentation ... Guaranteed | (888) 88-SOURCE | www.artisantg.com

When the editable data field is in the read-only state, it looks and acts exactly like a non-editable data field. Like the non-editable data field, it cannot have focus, and the up or down arrow keys will skip over the field. This state is used primarily to lockout specific data elements from front panel change when the Model 5600 is in remote mode. Any IEEE-488 or RS-232 communication will place the unit in remote mode, and editable fields that are protected during remote operations change to the read only state.

2.4.1.3.1 Changing Data Fields

A data field can only be changed from the front panel when the field is the focus. Some fields are numeric-based, such as current set point or limits. Other fields are multi-choice fields, such as Yes/No fields. Both types are changed with the left and right arrows or the dial.

2.4.1.4 Controls

There are certain functions in the 5600, such as setting the photodiode zero reference, that require a “button push”. Because the 5600 has no additional buttons to do this function, it uses a “soft button”. A soft button is similar to an edit field, but instead of selecting a value with the left and right arrow keys when the field is selected, the left and right arrow keys function as custom defined buttons for as long as that field is selected. For example, the return to local function is not a setting or value, but a state of operation. A soft button for return to local might look like this:

```
→Local      →      Set
```

When this field is selected, as in this example, pressing the right arrow key would set the unit to local mode. There are also elements on the 5600 which use the left arrow as well, such as this example:

```
→Set ←PD Zero→ Clr
```

In this case, pressing the left arrow key will set the photodiode zero reference to the current input level, and pressing the right arrow key would clear the zero reference.

Artisan Technology Group - Quality Instrumentation ... Guaranteed | (888) 88-SOURCE | www.artisantg.com

2.4.2 Main Screen

The system main screen is shown below, and is discussed in detail in section 3.5.2 and later. The screen is displayed after power on initialization, and its displayed elements will depend on the mode of operation. In this example, the unit is in constant current mode, displaying the current set point, photodiode read back, and voltage read back.

```
→Io=    0.00 A <LDD>
 Im=      0 uA
 Vf=   0.000 V   MOD
         OutT  SETUP←
```

Figure 2 - Main Screen

2.4.3 Menu Structure

The 5600 has a simple menu structure for changing the operation settings, such as limits, communications parameters, and so forth. Each menu has settings accessible by first pressing the **MENU** button, then using the soft keys to navigate through the menus. When discussing the menu items within a menu, all the items are shown in a single box.

NOTE
The 5600 display is a four line display, therefore only four elements will be visible at a time.

2.4.3.1 Laser Setup Menu

The Laser Setup menu is covered in section 3.5.3, and covers settings that pertain to the operation of the laser, such as mode, limits, bandwidth, pulse mode, and so forth.

2.4.3.2 Modulation Setup Menu

The Modulation Setup menu is covered in section 3.5.4, and covers settings that pertain to the modulation operating mode (off, internal, external) and the internal modulator settings.

Artisan Technology Group - Quality Instrumentation ... Guaranteed | (888) 88-SOURCE | www.artisantg.com

2.4.3.3 Communications Menu

```
▸Err While Rmt=   No
▸GPIB Address=     4
▸Speed=    9600 Baud
▸Terminal Mode=   No
```

Figure 3 - Communications Menu

The Communications menu contains the setup parameters for GPIB and RS-232C communications.

The **Local** soft button will return the 5600 to local mode after being controlled over GPIB or RS-232C.

Error messages may appear on the display when error conditions occur which force the output off or reflect hardware errors in the 5600. Display of error messages on the 5600 screen may be disabled while in remote mode by setting **Err While Rmt** to **No**. Errors will continue to accumulate in the error queue, but will not be displayed on-screen.

GPIB Address selects the device address on the GPIB bus. The allowed range is 1 to 31.

Speed controls the speed of the RS-232C interface. The allowed speeds are 300, 1200, 2400, 4800, 9600, 19200, and 38400. The parity is NONE, and data bits are 8.

Terminal Mode controls the system prompt when communicating over the RS-232C interface. See the section on terminal mode in the ***Computer Interfacing Manual***.

Artisan Technology Group - Quality Instrumentation ... Guaranteed | (888) 88-SOURCE | www.artisantg.com

2.4.3.4 System Menu

The system configure menu controls basic operation of the 5600 system.

```
        System        ▲
→Contrast=      11 %
▸Brightness=  100 %
▸Lockout Dial=   No
▸Lockout Pad=    No
▸Audible beep=  Yes
▸On Delay=    3.0 S
▸Key Rate=     Fast
▸Dial Rate=    Fast
```

Figure 4 - System Configure Menu

Brightness varies the back lighting intensity. **Contrast** is used to optimize the viewing angle.

Audible Beep controls the system's audible beeper. The beeper indicates errors, invalid data entry, and other situations where the 5600 needs to alert the user.

On Delay controls the delay time from the moment a Laser Diode Driver is turned on by the user to the actual time the output is energized. The delay time is programmable from 0 seconds to 30 seconds. The default setting is 3 seconds.

Key Rate - this controls the speed at which, when a key is held down, it repeats. Settings are **Slow**, **Medium**, and **Fast**.

Dial Rate - like the **Key Rate** setting, this controls the acceleration of the dial as it is turned. Settings are **Slow**, **Medium**, and **Fast**.

Artisan Technology Group - Quality Instrumentation ... Guaranteed | (888) 88-SOURCE | www.artisantg.com

Lockout Dial disables the dial to avoid accidental changes in active data fields if the dial is bumped.

Lockout Pad locks out the left and right arrow keys, the data entry portion on the keypad. Navigation keys, such as up and down, **MENU**, **MASTER**, and **FUNC** continue to work.

2.4.3.4.1 Calibration Menu

The calibration menu is used to access the 5600 calibration functions. Only qualified persons who fully understand the calibration procedure should perform these calibrations. Each of the calibration procedures are described if detail in Chapter 7.

```
Calibrate LDD  PUL
                Im
                Vf
               Iop
```

Figure 5 - Calibration Menu

Because these are soft buttons, to use any of the calibration functions, first select the function, then press the right arrow key.

For each of the functions, see the following sections:

Io calibration: section 7.2.2.
Im calibration: section 7.2.4.
Vf calibration: section 7.2.6.
Pulse width and frequency calibration: section 7.2.8.

2.4.3.5 Save/Recall Menu

```
     Save/Recall SAV
→Bin= 1
                RCL
```

Figure 6 - Save/Recall Menu

Artisan Technology Group - Quality Instrumentation ... Guaranteed | (888) 88-SOURCE | www.artisantg.com

The Save and Recall functions are used to store and retrieve 5600 setup configurations for future use. For example, a specific test setup may be saved for later use, and then another setup may be used presently. Then, when the user desires to perform the specific test, its setup is simply recalled.

Non-volatile memory is used for saving the instrument parameters. When a save operation is performed, all of the parameters that are currently in effect on the 5600 are stored. The user selects a “bin” number (1 - 5) for saving the parameters. Then, when that “bin” number is recalled, the 5600 is restarted and the parameters are reconfigured to the previously stored values.

A special “bin 0” is reserved for the reset state. Recalling bin 0 will reset the driver to factory defaults.

2.5 Rear Panel Familiarization

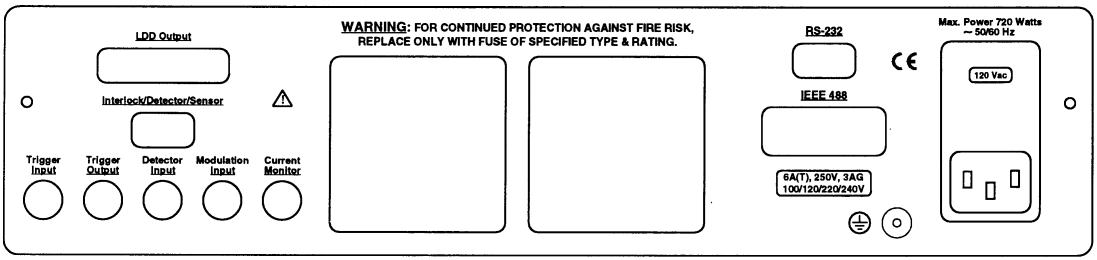

Figure 7 - Rear Panel

2.5.1 RS-232 Connector

The 5600 has an RS-232 connector located on the back panel. See the ***Computer Interfacing Manual*** for a more complete description of the RS-232 interface.

2.5.2 GPIB Connector

The GPIB connector, located on the back panel, allows full remote control as described in the Computer Interfacing Manual. It accepts a standard IEEE-488 cable for remote control, and uses Metric lock screws. See the ***Computer Interfacing Manual*** for a more complete description of the GPIB interface.

Artisan Technology Group - Quality Instrumentation ... Guaranteed | (888) 88-SOURCE | www.artisantg.com

2.5.3 Modulation Input BNC Connector

The Modulation connector provides external modulation control. See section 3.3.

2.5.4 Current Monitor BNC Connector

This is the current monitor BNC.

2.5.5 Detector Input BNC Connector

The connector allows the connection of a BNC terminated detector.

2.5.6 LDD Output Connector

The LDD Output connector provides the laser connection. See section 3.3.

2.5.7 Input Power Connector

Accepts a standard line cord for AC input. Also selects one of four AC input settings: 100V, 120V, 220V, and 240V. The cord must be removed to change the setting. A small screwdriver will open the top of the module and expose the rotary switch. Select the range that is closest to your expected nominal RMS line voltage. The voltage selection is set for 120 VAC prior to shipping.

CAUTION

Do not exceed 250 VAC on the line input.

Do not operate with a line voltage that is not within ±10% of the line setting. Too low of an input voltage may cause excessive ripple on the DC supplies. Too high of an input voltage will cause excessive heating.

2.5.8 GND Post

Provides access to chassis ground, which is also an earth ground as long as a standard 3-wire line cord is used. This is a protective conductor terminal to be used to achieve chassis grounding requirements when the main connectors don’t provide an earth ground terminal. Use a minimum of 18 gauge wire to connect to this terminal.

Artisan Technology Group - Quality Instrumentation ... Guaranteed | (888) 88-SOURCE | www.artisantg.com

2.5.9 Trigger Input BNC Connector

Used for external trigger in pulse mode. It controls the rate.

2.5.10 Trigger Output BNC Connector

Used in pulse mode to sync. other devices.

2.5.11 Interlock/Detector Connector

Connections for interlock, detector and sensor. See section 3.3.

2.6 Warm Up and Environmental Consideration

Operate the 5600 at an ambient temperature in the range of 0 to +40°C. Storage temperatures should be in the range of -20 to +60°C. To achieve rated accuracy, let the 5600 warm up for 1 hour. For greatest accuracy, recalibrate when ambient temperature changes more than a few degrees.

CAUTION

Operating above +40°C can cause excessive heating and possible component failures.

Artisan Technology Group - Quality Instrumentation ... Guaranteed | (888) 88-SOURCE | www.artisantg.com

C H A P T E R 3

3. Laser Diode Driver Operation

3.1 CW/QCW Laser Diode Driver

3.1.1 Introduction

Features of the 5600 include:

- Closed-case calibration
- High-stability, low noise design
- Flexible setup with 5600 Save/Recall front panel functions
- Detector feedback control mode
- Internal modulation source
- External modulation input
- QCW (pulse) mode
- Fault detection
- Current and voltage limiting

CAUTION
Although ESD (electrostatic discharge) protection is designed into the driver, operation in a static-free work area is recommended.

3.1.2 Laser Diode Protection Requirements

Laser diodes are extremely sensitive to electrostatic discharge and current spikes (transients). Damage can result in reduced output power, shift in threshold current, changes in beam divergence, and ultimately failure to lase (LED-like output only).

Newport precision current sources and controllers offer the most advanced laser protection features available, including power line filters, clamping current limits, and slow-start-up circuits.

However, no instrument can protect against all conditions, especially ESD at the laser. In order to optimize immunity from radiated or conducted

Artisan Technology Group - Quality Instrumentation ... Guaranteed | (888) 88-SOURCE | www.artisantg.com

electromagnetic energy, e.g. static discharge, the following guidelines for the laser diode must be adhered to:

- ESD is the primary cause of premature laser failure. As a minimum, use anti-static wrist straps (grounded with 1 MΩ resistor), anti-static floor coverings, grounded soldering irons, and grounded work areas. Ionized air blowers are also recommended.
- Laser diode leads should be shorted whenever the laser is transported or stored.
- Recess the laser diode inside a metal shielded enclosure, such as a laser diode mount, recessed at least ¼" with the minimum aperture necessary to allow beam exit (less than 0.125").
- If industrial loads are switched in or near your laboratory, use isolation transformers and/or surge suppressor power strip with your laser current source.
- Isolate your laser current driver with a surge suppresser when using a common line with laboratory power supplies, soldering irons, or other electronic instruments. Avoid using such devices on the same surge suppresser as your laser source.
- Make sure all the cables to the laser diode are securely fastened. Avoid "bundling" current source cables with other cables in your laboratory,
- Set current and voltage limits to appropriate levels, following the laser manufacturer's recommendations (or to just above the expected operating current). Suggestions include setting the compliance voltage no more than 10% above Vf, and setting the current limit at or below the maximum operating current of the laser diode.
- ***Avoid ground loops. Don't ground the LDD cable shield to a grounded enclosure in which you mount the laser diode***.

Added protection from electrostatic surges or surges from the circuitry can be obtained by inserting ferrite beads and capacitors near the laser diode as shown in figure 9. NOTE: For squarewave modulation or pulse mode, this circuit will seriously affect the current waveform.

Artisan Technology Group - Quality Instrumentation ... Guaranteed | (888) 88-SOURCE | www.artisantg.com

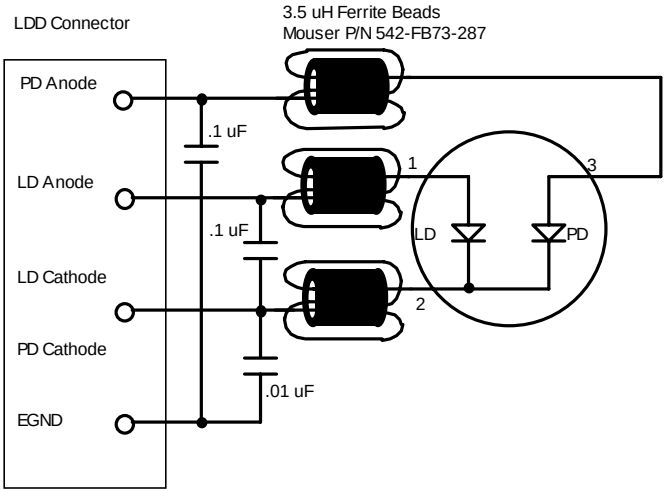

Figure 8 - Laser Diode Protection Circuit

3.2 Laser Safety Features

3.2.1 Conditions Which Can Automatically Shut Off the Laser Output.

- Laser Open Circuit[7]
- Laser Compliance Voltage Limit[7]
- Laser Hard Current Limit[7]
- Laser Interlock State Changed[7]
- Laser Photodiode High Current Limit
- Laser Photodiode High Power Limit
- Laser Intermittent Contact (if enabled, default disabled)

Clearing the appropriate bits in the Laser OUTOFF register can disable some of these conditions. See ***Computer Interfacing Manual*** for more information.

3.2.2 Key switch interlock

The keyswitch, located on the back panel of the 5600, will shutoff, or not allow to be turned on, the laser output while in the OFF position, per CDRH requirements.

[7] This condition will always shutdown the laser output, and cannot be disabled.

Artisan Technology Group - Quality Instrumentation ... Guaranteed | (888) 88-SOURCE | www.artisantg.com

3.2.3 Lockout Dial Button

The **Lockout Dial** button on the front panel located below the control dial disables the dial. This prevents any inadvertent changes in the output by accidental movement of the control dial.

3.2.4 Turn On Delay

The 5600 is CDRH Compliant with a user programmable turn on delay. The default turn on delay is three seconds, but is user programmable from 0 to 30 seconds. The delay setting is in the system menu (see section 2.4.3.4). The field is labeled **On Delay**.

3.3 The Laser Connectors

Connections are shown by the pin-out diagram below. See Figure 7 for an illustration of the back panel.

LDD Output		**Interlock/Detector**	
Pin	**Description**	**Pin**	**Description**
1,2	Anode	1,2	Interlock
3,4	Cathode	3	Detector (+) (Thermo. +, P.D. cathode)
5	E. Ground	4	Detector (-) (Thermo. -, P.D. anode)
		6	Aux. 10k Ω Thermistor
		7	Aux. 10k Ω Thermistor
		9	E. Ground

Table 1 - Laser Connector Pinouts

Artisan Technology Group - Quality Instrumentation ... Guaranteed | (888) 88-SOURCE | www.artisantg.com

3.3.1 External Modulation BNC

CAUTION
Do not connect or disconnect a signal to the modulation input with the laser on.

A BNC connector is provided for an external modulation signal. See section 3.5.4 for a description of modulation setup.

Each 100 mV change in the modulation input is equal to 1% of the maximum drive current of the driver. However, regardless of the input voltage, the current cannot exceed the current limit.

3.3.2 Detector BNC

CAUTION
Do not disconnect the detector with the laser on.

A BNC connector is provided for detector connections, with the center pin the cathode connection and the outer shell the anode connection for photodiodes. For thermopiles, the positive lead goes to the center and the negative lead goes to the shell. It is the same input as pins 3 and 4 in the 9-pin D connector.

3.3.3 Interlock

The interlock pins, 1 and 2, must be connected together to complete the circuit and allow the laser operation. Internally, pin 1 is connected to a +5V supply through a 10 kΩ resistor and pin 2 is connected to ground through a 220 Ohm resistor.

3.3.4 Aux. Thermistor

A standard 10kΩ thermistor can be used to monitor external temperature. When not using this connection, place a 10kΩ resistor across pins 6 and 7. In this case the Taux reading will always be approx. 25 °C.

Artisan Technology Group - Quality Instrumentation ... Guaranteed | (888) 88-SOURCE | www.artisantg.com

3.4 Connecting to Your Laser

When connecting laser diodes and other sensitive devices to the driver, we recommend that the 5600 be powered-up and the laser output be off. In this condition, a low impedance shunt is active across the output terminals. When disconnecting devices, it is only necessary to turn the laser output off.

Pins 3 and 4 of the LD connector are the negative output, and pins 1 and 2 are the positive output current connections. These pins are jumpered to provide greater contact area for the output connection.

NOTE
Whenever external connections are made to the output at pins 1 and 2, and 3 and 4, these connector leads should be jumpered to ensure the greatest laser diode safety.

We also recommend the use of the mating connector for your interface rather than binding posts, or loose wires. This will insure the best connection.

NOTE
Special cabling is required to preserve the pulse transition time and overshoot. Newport recommends the 5600-02 or 5600-04.

3.4.1 Laser Diode Connections and Shielding

CAUTION
Before connecting the laser diode to the unit, be sure that the **ENABLE** key switch is in the OFF position. Before turning on the laser output, be sure that the current limit and voltage compliance limit has been correctly set.

Artisan Technology Group - Quality Instrumentation ... Guaranteed | (888) 88-SOURCE | www.artisantg.com

NOTE

The cable connections to the laser must be secure to avoid an open circuit, should they be jostled or bumped. Should an open circuit occur during laser operations, the laser output will normally be turned off automatically.

Special circuits in the laser driver are present for detecting intermittent contacts and connections. These circuits detect the abrupt change in current that occurs when the output circuit is opened, and the 5600 will generate an E-503 error.

Experience indicates that should an open circuit occur during laser operation, the laser may be damaged. Therefore, secure cabling is important.

NOTE

Although the intermittent contact circuitry works well in helping to protect the laser diode, there is still a danger in having poor connections, as no circuit can protect completely.

NOTE

It is possible with some modes of modulation, especially pulse or square-wave, to trigger the intermittent contact circuit and cause a shutdown. If this is the case for you, the intermittent contact feature may be disabled in the laser set up menu, with reduced laser protection in the case of poor connections.

The output terminals of the unit are left floating relative to earth ground to suppress AC power-on/power-off transients that may occur through an earth-ground path. If the output circuit is earth-grounded at some point (such as through the laser package and mount), the user must be careful to avoid multiple earth grounds in the circuit. Multiple earth grounds may short out the driver and may damage the laser.

Artisan Technology Group - Quality Instrumentation ... Guaranteed | (888) 88-SOURCE | www.artisantg.com

See section 3.1.2 for additional information on laser diode protection.

3.4.2 Detector Feedback Connections

The detector signal is input at the 9-pin D-connector at pins 3 and 4, or the detector BNC. The detector must be electrically isolated from the Laser Diode in your setup.

Many laser diode drivers contain an internal photodiode that monitors the back-facet emission of the laser. Some packages have one side of the photodiode is internally connected to either the laser anode or cathode. These types of packages will not work with the 5600.

3.4.3 Grounding Consideration

The laser outputs of the driver are isolated from chassis ground allowing either output terminal to be grounded at the user's option.

3.5 Laser Driver Operation

3.5.1 Quick Start

After the power-on sequence is complete, the 5600 goes to the main display. To set up a laser driver, press the **MENU** button, then select laser setup. At this point, the display shows all laser parameters. Using the cursor keys and dial, select the desired functions and set the parameter values. When finished, return to laser display by pressing the **MENU** button.

Enter the desired set point value using the cursor keys or the dial. Press the **LDD ON** button to operate the laser. The LED illuminates to indicate laser operation. To turn the laser off, press the **LDD ON** button.

3.5.2 Laser Main Screen

The laser main screen in shown in Figure 9 and described in detail below.

```
→Io=   50.01 A <LDD>
 Im=    0.0 uA
 Vf=   0.000 V  MOD
I M P O S InT SETUP←
```

Figure 9 - Main Screen

Artisan Technology Group - Quality Instrumentation ... Guaranteed | (888) 88-SOURCE | www.artisantg.com

Io=, **Im**= or **Po**= : When these fields are editable, such as the **Io**= field in the figure above, they indicate the corresponding set point. Non-editable fields, such as the **Im**= and **Vf**= fields above, indicate measured values, such as laser current or voltage, photodiode current, or photodiode power.

The upper right corner of the display functions as a status indicator. The possible status conditions include:

I	Driver is operating at the Io current limit
M	Driver is operating at or over the Im current limit
P	Driver is operating at or over the Po current limit
O	When illuminated, indicates the system has detected an open circuit. Only detected when the unit is on.
S	When illuminated, indicates the system has detected a short circuit. Only detected when the unit is on.
InT/OutT	Driver set point is in or out of tolerance

3.5.3 Laser Setup Menu

The laser setup menu for the Model 5600 is shown in Figure 10 and described in detail below.

```
→Mode    =      Io    ▲
‣Io Lim  =    60.0 A
‣Vcomp   =    5.00 V  ▼
```

```
→Im Lim=     2500 uA▲
‣Po Lim=     1500 mW
 Photo=    000µA/mW
 Detector=    Photo▼
```

```
‣Aux Lim=    80.0 °C
‣Trigger=       Int
```

```
                                ▼

▸Pulse Enable=    On▲
▸Pulse Wid=   1000µS
▸Pulse Frq=   100 Hz
▸Pulse Duty=    10 %▼

 Taux=       25.1 °C▲
 Tamb=       23.5 °C
 Ths=        32.1 °C
 Vlas=        5.00 V▼

▸Vf loss=     5 mV/A
▸Tol Time=     1.0 S
▸Tol Iop=      10 mA
▸Int Contact=   Off

                PD ZERO
```

Figure 10 - Laser Setup Menu

3.5.3.1 Mode

The **Mode** setting controls how the laser driver current is controlled. There are three modes: **Io**, **Im**, and **Po**.

Artisan Technology Group - Quality Instrumentation ... Guaranteed | (888) 88-SOURCE | www.artisantg.com

In the **Io** mode, the active set point is the actual drive current. A set point of 10A will cause the driver to drive 10A through the laser diode, assuming the **Io Lim** is set at or above 10A.

In **Im** mode, the set point is the desired amount of photodiode current, in µA. Unlike the **Io** mode, **Im** mode will drive whatever current is necessary though the laser diode, up to the limit, to achieve the set point photodiode current.

Po mode is simply an extension on the **Im** mode, allowing the user to operate the system in milliwatts of power. The photodiode power set point, in mW, is converted to photodiode current using the **PD Resp** value from the setup menu.

3.5.3.2 Io Lim

As one of the safety features of the laser driver, the **Io Lim** sets a maximum allowable current drive for the laser diode. The system will also limit current set points to this value when operating in the **Io** mode. Two conditions can be generated when the driver reaches this limit. The lesser of the two is the soft current limit. The soft limit, indicated by **I** on the status line of the Laser Main Screen, indicates that the laser driver is limiting the current drive to the laser diode, but otherwise operating as normal. The second condition is a hard limit, which indicates that the current drive attempted to exceed the current limit faster than the circuitry could limit it. This condition causes the laser driver's output to be shutdown. Both of these conditions are monitored in circuitry on the driver itself, and in the case of the hard limit, shutdown is within microseconds of the condition being detected. See section 3.1.2 for additional information on laser diode protection.

3.5.3.3 Vcomp

The voltage compliance setting controls the shutdown of the laser driver output when the forward voltage of the laser exceeds the compliance setting. Like the current limit described above, the voltage compliance is monitored in circuitry on the driver itself, allowing for shutdown within microseconds of the condition. See section 3.1.2 for additional information on laser diode protection. The Vcomp setting may have to be increased when in pulse mode or using square-wave modulation, due to driving cable inductance.

Artisan Technology Group - Quality Instrumentation ... Guaranteed | (888) 88-SOURCE | www.artisantg.com

3.5.3.4 Im Lim

The photodiode current limit is a software monitored limit on the current delivered from the photodiode. Because this limit is a software monitored limit, shutdown can occur up to a second after the condition is true.

3.5.3.5 Po Lim

Like the **Im Lim**, the photodiode power limit is a software monitored limit on the power delivered from the photodiode. For this limit to function, the user must set a **PD Resp** value other than zero. Because this limit is a software monitored limit, shutdown can occur up to a second after the condition is true.

3.5.3.6 Tol Time and Tol Iop

The **Tol Time** and **Tol Iop** elements are used for determining when the laser is “in tolerance.” The **Tol Time** value is expressed in seconds, and can range from 0.001 seconds to 50 seconds. The **Tol Iop** value is displayed in mA, and can range from 0.1 mA to 100 mA. When operating in **Im** or **Po** modes, The **Tol Iop** setting is ignored, and fixed values of 50 µA and 50 mW, respectively, are used. The laser is considered in tolerance after it has been within the tolerance setting for the set number of seconds. If at any time it goes outside the tolerance range, the time restarts at zero.

As an example, if the **Tol Time** is set to 5 seconds, the **Tol Iop** is set to 2 mA, and the current set point was 1000 mA, the laser driver would have to stay within 998 mA and 1002 mA to be within tolerance. Out of tolerance is indicated by a **OutT** status field on the bottom of the Laser Main Screen.

3.5.3.7 Taux

Taux displays the temperature of the auxiliary temperature sensor.

3.5.3.8 Tamb

Tamb displays the temperature of the internal ambient temperature sensor.

3.5.3.9 Ths

Ths displays the temperature of the output stage heatsink. If this temperature exceeds 85°C, the output will automatically shut off.

3.5.3.10 Vlas

Tlas displays the output voltage of the switching supply used to drive the laser output.

Artisan Technology Group - Quality Instrumentation ... Guaranteed | (888) 88-SOURCE | www.artisantg.com

3.5.3.11 Vf Loss

Vf Loss allows for compensation of voltage loss in the output cable. In applications where small gauge wire is used, current can cause a measurable loss in voltage across the cable. By measuring the voltage directly at the diode and comparing the difference of the displayed voltage reading, an error factor can be calculated and entered as the Vf loss. Note, however, that the Vf loss value does ***not*** affect the Vcomp setting. Voltage compliance settings must include any loss in the cable.

3.5.3.12 Pulse Enable

Enables/Disables QCW mode.

3.5.3.13 Pulse Width

Adjusts the pulse width.

3.5.3.14 Pulse Rate

Adjusts the pulse rate.

3.5.3.15 Duty Cycle

A calculated value based on width and rate.

3.5.3.16 PD Resp

The **Resp** element is the photodiode response conversion factor between photodiode current and photodiode power, and is expressed in µA per mW. If this value is zero, the system will not operate in **Po** mode.

3.5.3.17 PD Zero

The **PD Zero** element is the photodiode offset that is removed from the photodiode read back before any values are displayed, and conversely, is added to any photodiode set point. The photodiode offset is a combination of any dark current or stray light picked up while the laser is off. Pressing the **PD Zero** soft button sets the photodiode current that is present on the photodiode input.

3.5.4 Modulation Setup Menu

The modulation setup menu for the Model 5600 is shown in Figure 11 and described in detail below.

Artisan Technology Group - Quality Instrumentation ... Guaranteed | (888) 88-SOURCE | www.artisantg.com

```
  Modulation Setup ▲
→Mod Enable=     Int
▸Freq=     0.200 kHz
▸Mod Amp=       25 A
▸Mod Type=       Sqr▼
```

```
▸Io min=         0 A ▲
▸Io max=        50 A
```

Figure 11 - Modulation Setup Menu

3.5.4.1 Modulation Enable (Mod Enable)

The **Mod En** sets the over modulation control. The possible settings are **Off**, **Int**, and **Ext**, for off, internal, and external, respectively. **Int** is for using the internal modulator as a modulation source. **Ext** enables the external modulation input port. **Off** disables all modulation and shorts the modulation input.

3.5.4.2 Frequency (Freq)

The **Freq** setting controls the modulation output frequency of the internal modulator. When the modulation is off, changes to this setting have no effect.

3.5.4.3 Modulation Type (Mod Type)

Mod Type selects the output waveform, either sine or square wave. The square wave has a fixed 50% duty cycle.

3.5.4.4 Modulation Amplitude (Mod Amp)

The **Mod Amp** value sets the waveform amplitude, which has both a positive and negative component around the set point.

Artisan Technology Group - Quality Instrumentation ... Guaranteed | (888) 88-SOURCE | www.artisantg.com

3.5.4.5 Io min and Io max

Io min and **Io max** are an alternative method to using the set point and amplitude values. Instead of thinking of the modulation as a ± value around the set point, **Io min** and **Io max** can be used to set the minimum and maximum current points on the modulation waveform. They will, in effect, change the modulation amplitude and current set point, and simply allow a different method of inputting modulation information.

Artisan Technology Group - Quality Instrumentation ... Guaranteed | (888) 88-SOURCE | www.artisantg.com

Artisan Technology Group - Quality Instrumentation ... Guaranteed | (888) 88-SOURCE | www.artisantg.com

C H A P T E R 4

4. Principles of Operation

4.1 Introduction

A functional block diagram of the 5600 is shown in Figure 12. In each of the following sections there are functional block diagrams for the various circuit boards of the 5600.

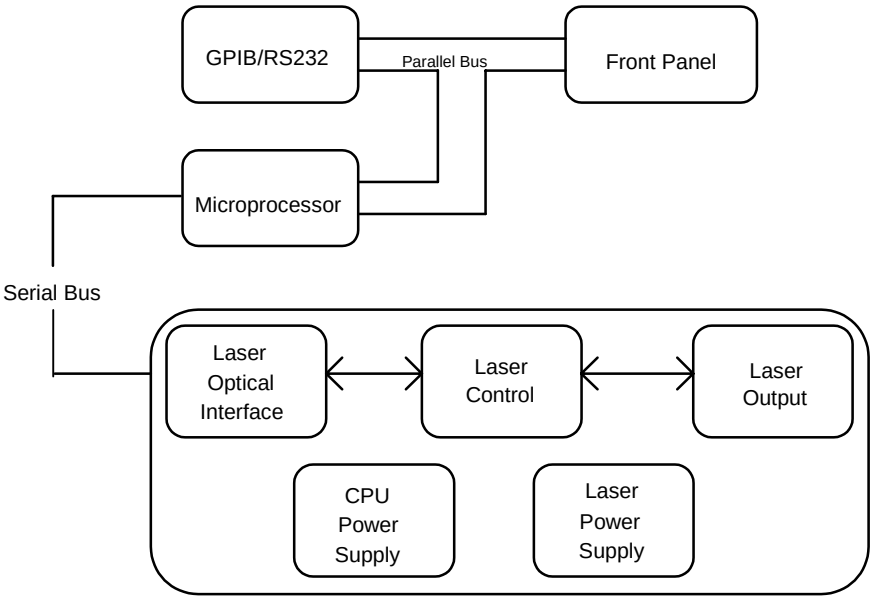

Figure 12 - 5600 Block Diagram

4.2 Laser Driver Theory of Operation

Figure 13 shows the functionality of the Laser Driver. The following sections detail the theory of operation for each of the blocks in Figure 13.

The circuit block diagrams for each laser mode of operation are shown in Figure 14, Figure 15, and Figure 16. The theory of operation for each mode of operation is discussed in Sections 4.2.9 - 4.2.11.

Artisan Technology Group - Quality Instrumentation ... Guaranteed | (888) 88-SOURCE | www.artisantg.com

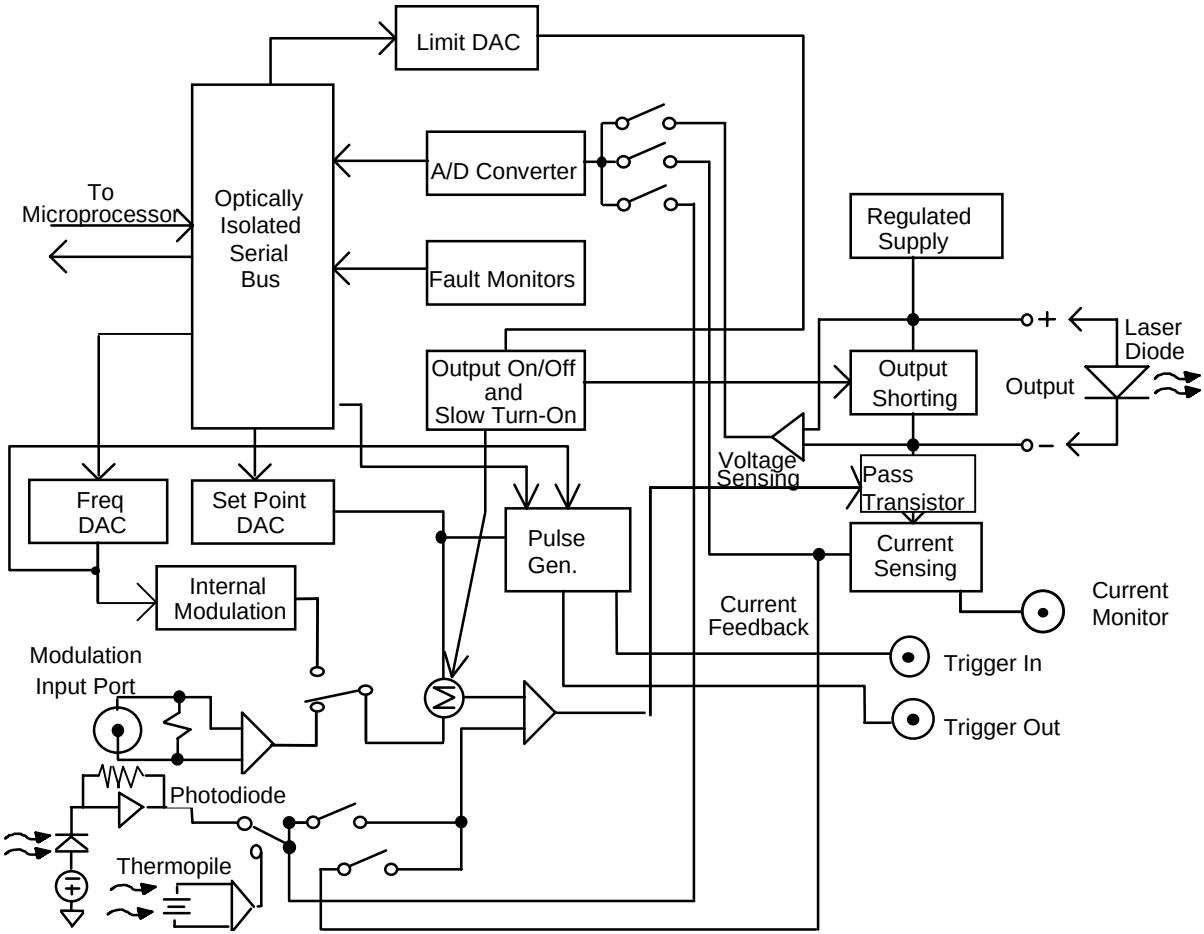

Figure 13 - Laser Driver Block Diagram

4.2.1 Laser Interface

The laser interface provides optically isolated serial communications between the laser board and the microprocessor. Control signals are passed to the laser board to set the laser board status, current limit, current set points, and photodiode feedback functions. Instructions and data are sent over the serial interface to the optical barrier. Status and data are serially passed back to the microprocessor.

Artisan Technology Group - Quality Instrumentation ... Guaranteed | (888) 88-SOURCE | www.artisantg.com

4.2.2 Limit DAC

The microprocessor loads the current limit value into the 12-bit DAC. The Limit DAC converts a digital limit signal from the microprocessor to a voltage which becomes the Limit Set Point voltage for the Output Stage. The current limit value is updated at power-up, at a "bin" recall, and whenever a LIM I value is changed.

4.2.3 Set Point DAC

The microprocessor loads the current set point value into the 16-bit DAC. The Set Point DAC converts a set point value from the microprocessor to a voltage which becomes the current or I_{PD} set point input to the laser output stage. The laser current set point value is updated at power-up, at a "bin" recall, and whenever a laser set point value is changed.

4.2.4 A/D Converter

The 16-bit A/D converter measures the forward voltage, laser current, and photodiode current.

4.2.5 Current Source Voltage

Taking the unregulated DC voltage from the power supply forms the current source voltage.

4.2.6 Output Shorting

A relay shorts the LD anode and LD cathode terminals whenever the laser output is turned off. At the same time a FET is switched on to shunt any current which may appear at the output. When the laser output is turned on, the shunt circuit and short are removed gradually, and in two stages. This ensures transient protection of the laser output.

4.2.7 Modulation Input Port

The rear panel modulation input connector drives a precision wide-band instrumentation amplifier allowing the differential control signal applied to this port to use a different ground than the laser output terminals. However, due to the input common-mode voltage restrictions, the MOD input should be within ±10 volts of the laser output terminals.

Each 100 mV change in the modulation input is equal to 1% of the maximum drive current of the driver. However, regardless of the input voltage, the current cannot exceed the current limit.

Artisan Technology Group - Quality Instrumentation ... Guaranteed | (888) 88-SOURCE | www.artisantg.com

4.2.8 Photodiode Feedback Amplifier

A precision Transimpedance amplifier provides photodiode feedback. When constant Power mode is selected, the photodiode feedback signal is used to control the laser output. A precision instrumentation amplifier is used to amplify the thermopile's voltage.

4.2.9 Constant Current, High Bandwidth Mode

This mode of laser operation is shown in Figure 14. In this mode, current feedback is used to control the laser output.

4.2.10 Constant Current, Low Bandwidth Mode

This mode of laser operation is shown in Figure 15. In this mode, current feedback is used to control the laser output.

In this mode, capacitors are switched into the circuit. These capacitors act as a filter and therefore prevent the laser output from changing too rapidly. This gives added laser diode protection. This also limits the laser output bandwidth to about 10 kHz.

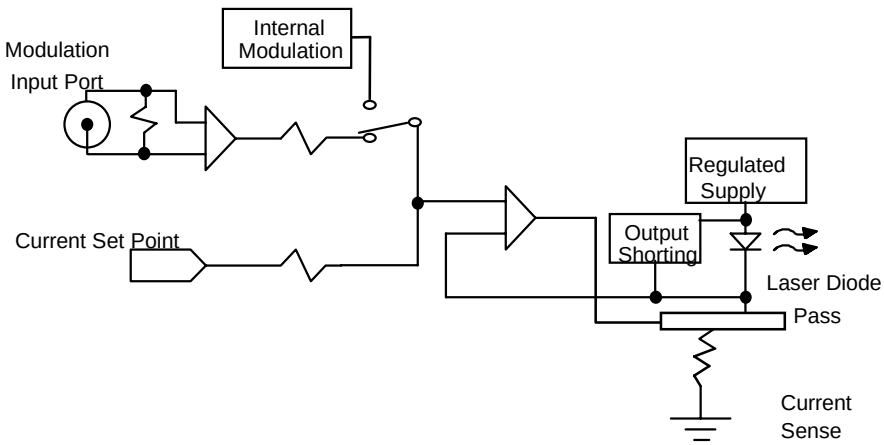

Figure 14 - Constant Current - High Bandwidth Mode

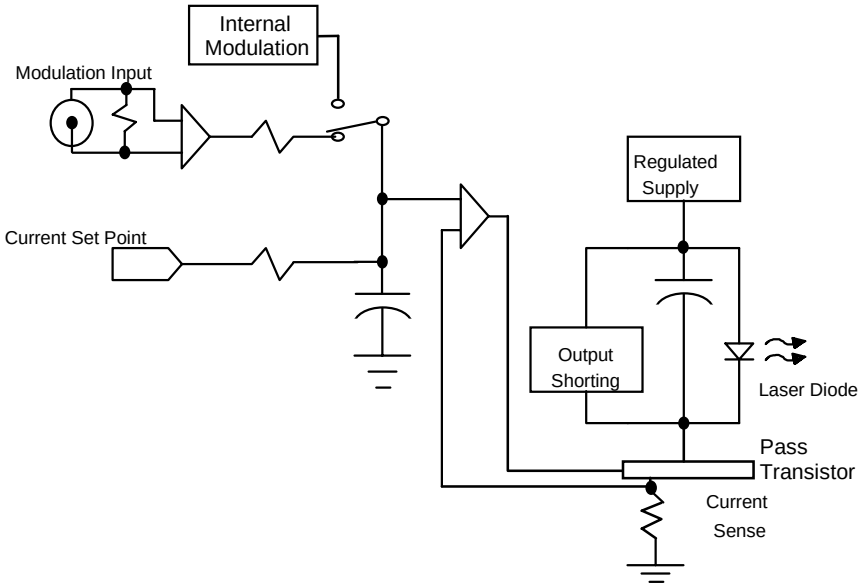

Figure 15 - Constant Current - Low Bandwidth Mode

Artisan Technology Group - Quality Instrumentation ... Guaranteed | (888) 88-SOURCE | www.artisantg.com

4.2.11 Constant Power Mode

In constant P mode the laser circuit is configured as shown in Figure 16. Detector feedback is used to control the laser output and the bandwidth is held low.

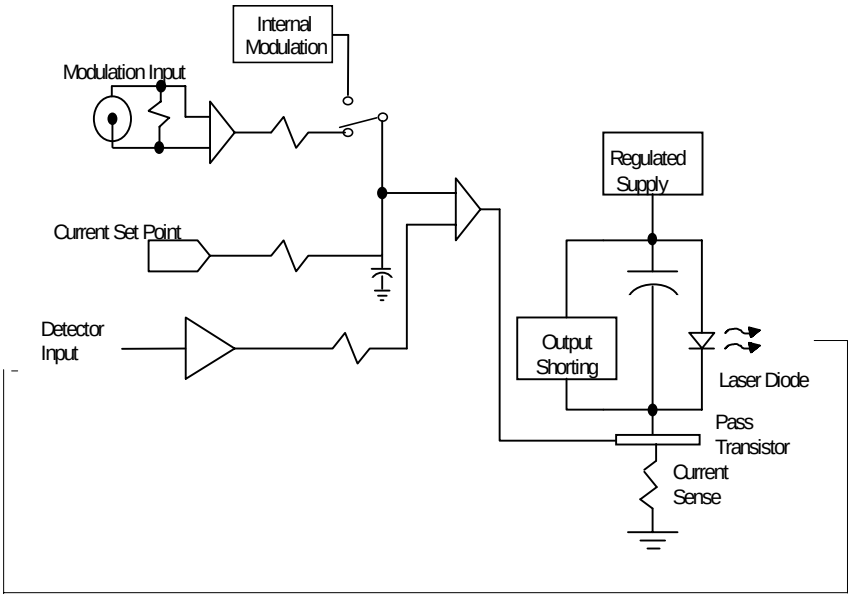

Figure 16 - Constant Power Mode

4.2.12 Internal Modulation

A sine or square wave function generator can be selected for internal modulation. The frequency is controlled by the frequency DAC's output and the sine or square function is controlled by a digital signal.

4.2.13 Pulse Generator

The pulse generator consists of a frequency source and a duty cycle modifier. The pulse signal grounds or opens the set point signal to form the pulse.

Artisan Technology Group - Quality Instrumentation ... Guaranteed | (888) 88-SOURCE | www.artisantg.com

4.3 Microprocessor Board

The Microprocessor Board contains the microprocessor, memory, front panel interface, and circuitry which monitors the AC line voltage and saves the state of the 5600 at power down. The block diagram of the Microprocessor Board is shown in Figure 17.

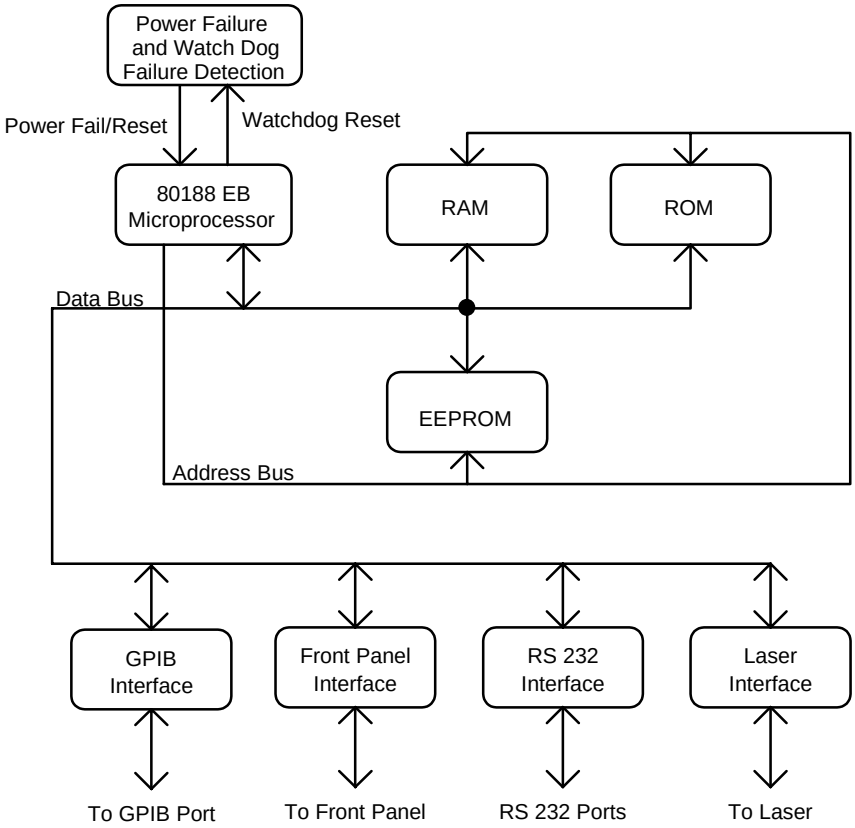

Figure 17 - Microprocessor Board Block Diagram

4.3.1 Microprocessor

The 5600 uses a CMOS 80188EB microprocessor to control its internal operations. The 5600 provides a fail-safe timer which generates a reset in the event of a malfunction. A 1 Hz watchdog pulse is normally present. If for any reason this clock pulse fails to appear it will reset the 5600.

Artisan Technology Group - Quality Instrumentation ... Guaranteed | (888) 88-SOURCE | www.artisantg.com

4.3.2 Memory

The 5600 uses three types of memory. RAM memory is retained only while power is applied to the unit. ROM memory contains the firmware. The third type of memory is electrically erasable programmable memory: EEPROM.

EEPROM stores calibration constants and other data that must be retained even when power is removed from the unit, and does not require battery backup. Examples of data stored in this memory include the laser parameters and calibration constants.

4.3.3 Laser Interface

The 80188 communicates with the laser driver through a serial port. Parallel data from the microprocessor is converted to bi-directional serial data at the asynchronous serial interface.

4.3.4 Front Panel Interface

Provides parallel communication with the front panel.

4.3.5 GPIB Interface

Provides parallel communication with the GPIB port.

4.3.6 RS-232 Serial Interface

Provides communication with the RS-232C serial port.

4.4 Power Supplies

AC power is supplied through the rear panel input power connector which provides in-line transient protection and RF filtering. The input power connector contains the fuses and the switch to select series or parallel connection of the transformer primaries for operation at 100 VAC, 120 VAC, 220 VAC, or 240 VAC.

4.4.1 LDD Power Supplies

These linear supplies provide analog and digital circuit power to the driver. A switch-mode supply provides drive power for the laser.

Artisan Technology Group - Quality Instrumentation ... Guaranteed | (888) 88-SOURCE | www.artisantg.com

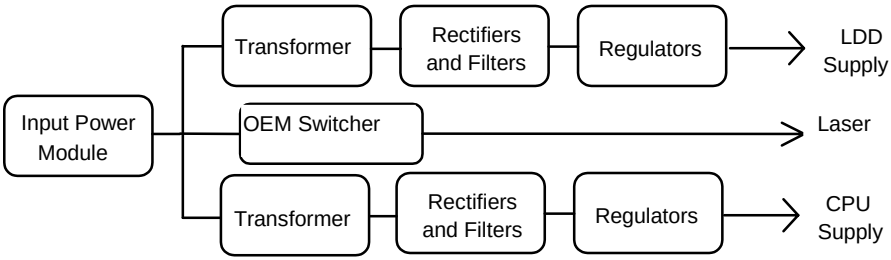

Figure 18 - Power Supply Block Diagram

4.4.2 CPU Supply

This supply provides digital circuit power for all functions except the laser driver. It also provides fan power.

4.5 Interlock Operation

The back panel laser input/output connector has interlock connections that must be connected before the laser output will be enabled. See section 3.3.3 for additional information.

4.5.1 Laser Interlock

Connector pins 1 and 2 form the interlock path. If there is not a connection between these pins the laser output will not be enabled. When this path is broken, the laser Interlock Error condition/event will be reported in the laser Condition Status Register and the Laser Event Status Register.

This interlock is a safety feature for laser protection. It requires that the connecting cable be secure before the laser output is enabled. A secure connection significantly reduces the possibility of an intermittent open circuit to the laser drive current.

Artisan Technology Group - Quality Instrumentation ... Guaranteed | (888) 88-SOURCE | www.artisantg.com

Artisan Technology Group - Quality Instrumentation ... Guaranteed | (888) 88-SOURCE | www.artisantg.com

C H A P T E R 5

5. Tips and Techniques

5.1 Introduction

This chapter is intended to further explain specific operational details of the Model 5600, as well as provide application examples.

5.2 Laser Limits

The laser driver has several limits to protect the laser diode from damage. The limits include current, compliance, photodiode current, and photodiode power.

Io Limit and Vcomp Limit

Two of these limits, current and compliance, are implemented in hardware. By implementing these limits in hardware, these limits are continuously monitored without any additional load on the main processor. The current limit is actually two limit circuits. The first circuit maintains the current limit by not allowing the drive current to exceed the limit's set point. The form of limiting is called soft limiting, and does not affect the operation of the laser except to limit the drive current. The second circuit monitors the actual current drive, and if that exceeds the limit set point, will shutdown the output. This form of limit is called the hard limit. The laser will always be shutdown on a hard limit.

Operating at or Near Io and Vcomp Limits

Because of the sensitivity of the limit circuits, operating at or near the limit unless necessary is not recommended because AC line transients, RF interference, or static can be enough to trigger these limits. The causes for hard limits and voltage compliance limits can vary, but can include the following:

- Static discharges, which may cause enough noise to trigger the circuit.
- Turning on the laser when its set point is at or near the limit. When turning on the output with the set point at the limit can cause a small overshoot in the drive current, which the limit circuitry may pick up as a hard limit and shutdown the laser.
- The same is true of Im set points that are much higher than what the laser is capable. When turning the laser on with an excessive Im set

Artisan Technology Group - Quality Instrumentation ... Guaranteed | (888) 88-SOURCE | www.artisantg.com

point, the driver will attempt to drive the necessary current to reach the set point, and hit the current limit so hard that a hard limit condition will occur, shutting down the laser.

Im Limit and Po Limit

Photodiode current and power limits, on the other hand, are implemented in software. Because of this software implementation, it is possible to exceed the photodiode current or power limits for a brief period of time before the condition is detected by the microprocessor. These conditions are checked once per second, so the latency time from the time the condition occurs to when the output would be shut off is at most two seconds. For more detailed information see LASer:TOLerance section of the manual (Computer Interfacing chapter).

5.3 Modulating

Laser modulation is supported by many of the Newport laser diode controllers, and allows external control of the laser operating current. By supplying an input voltage, the operator can set the operating current anywhere within the full range of the laser controller, although the output will still be limited by the current limit.

The modulation input takes a voltage range of 10V. Each 100 mV represents 1% of the driver's maximum operating current, which gives a range of 0% at 0V to 100% at 10V.

Using the Modulation Input as the Set Point

It is possible to fully control the laser set point through the modulation input by setting the laser current at zero from the front panel and turning on the laser output. The modulation input is then summed with the set point (which is zero) to give the actual set point. The voltage can then be ranged from 0V to 10V to give the full range of current output. Note, however, that the current limit is still active, and will not allow the current to exceed the current limit. The set point on the front panel could also be set at 50% full scale and the current could be modulated between zero and full scale by inputting a ±5V modulation signal.

Artisan Technology Group - Quality Instrumentation ... Guaranteed | (888) 88-SOURCE | www.artisantg.com

5.3.1 Grounding with Modulation

Most modulators have a BNC output that is connected to earth ground. This is not a problem as long as the laser anode or cathode is not also connected to earth ground. However, in many systems, it is. When it is, the following must be considered:

When the anode is tied to earth ground, this effectively connects earth ground to the laser power supply, which can be up to +10V dc. When the BNC on the modulator is connected to the modulation input, it biases the input to the laser power supply voltage. Since the common mode input range is only about +12V dc, the modulation signal range is reduced. 12V-10V leaves only 2V for the modulation. Thus, it may appear that the modulation input is not working properly.

5.3.2 Current Limit when Modulating

A special limiting circuit prevents overdriving the Laser Diode current when using external modulation.

The diagram below shows a sine wave of approximately 200 kHz that is being clamped at I_{lim}.

Artisan Technology Group - Quality Instrumentation ... Guaranteed | (888) 88-SOURCE | www.artisantg.com

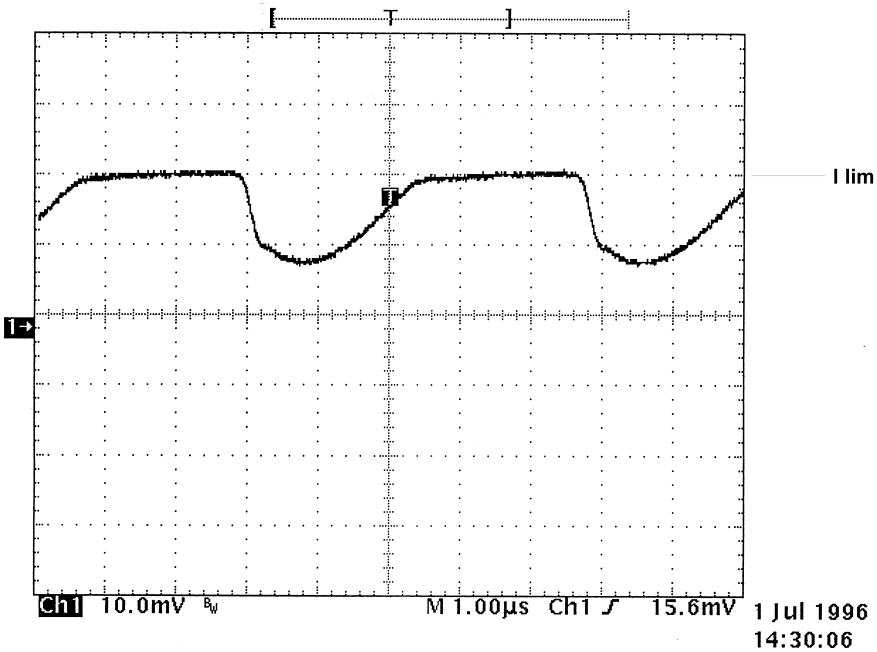

Figure 19 - Current Limit Example

5.4 Grounding A Laser Diode

The laser outputs are isolated from earth (chassis) ground. Isolating the laser diode case avoids damaging the device from multiple ground loop potentials, AC transients, or static discharge. Since test equipment probes, signal sources, and package mounts are often partially earth grounded, it is often necessary to also bond the device case to earth ground. It is strongly recommended that a single point ground scheme be established, specifically at the binding post. This will help minimize noise, transients, and ground loop hazards. Be sure to include any modulators in your ground circuit.

Newport cables are especially designed for use with our controllers and mounts. They provide a shield for noise reduction and proper grounding.

If you have additional questions about your earth grounding method, contact a Newport applications engineer.

Artisan Technology Group - Quality Instrumentation ... Guaranteed | (888) 88-SOURCE | www.artisantg.com

5.5 Noise Specifications

Newport measures the noise on its Laser Driver outputs using a resistive load and an HP 34401A true-rms ac voltmeter with a bandwidth from 3 Hz to 300 kHz.

5.6 Intermittent Contact Feature

When a loose wire breaks the connection to your laser, the driver sees a decrease in current through the laser and attempts to increase it back to the correct value. When the loose wire regains contact, the current may momentarily be higher than the set point. If this happens and the current is 10% or more above the setpoint and the intermittent contact feature is active, the unit will shut down with an “open circuit” error message.

It may be necessary to disable this feature when the following conditions exist:

1) Operating at extremely low set points. For example, 100mA on a 50 Amp driver.
2) When modulating at high frequencies or with square waves or in pulse mode.

5.7 V_f Measurements

The Laser’s forward voltage (V_f) is sensed at the D-sub connector on the driver. It is not the actual V_f of the laser. The difference being the voltage drop in the cables due to the laser current.

Artisan Technology Group - Quality Instrumentation ... Guaranteed | (888) 88-SOURCE | www.artisantg.com

Artisan Technology Group - Quality Instrumentation ... Guaranteed | (888) 88-SOURCE | www.artisantg.com

C H A P T E R 6

6. Maintenance

6.1 Introduction

There is no user serviceable parts inside the unit, do not attempt to remove the cover.

6.2 Fuse Replacement

The fuses are accessible on the back panel of the 5600. Before replacing a fuse, turn power off and disconnect the line cord. Use only the fuses indicated below.

Fuse Replacement	Line Voltage
6 Amps, 3 AG, T 250V	100/120/220/240 VAC

6.3 Cleaning

Use mild soap solution on a damp but not wet cloth. Disconnect AC power before cleaning.

Artisan Technology Group - Quality Instrumentation ... Guaranteed | (888) 88-SOURCE | www.artisantg.com

Artisan Technology Group - Quality Instrumentation ... Guaranteed | (888) 88-SOURCE | www.artisantg.com

C H A P T E R 7

7. Calibration

7.1 Calibration Overview

All calibrations are done with the case closed. The instrument is calibrated by changing the internally stored digital calibration constants. All calibrations may be performed locally or remotely.

7.1.1 Environmental Conditions

Calibrate this instrument under laboratory conditions. We recommend calibration at 25°C ± 1.0°C. When necessary, however, the 5600 may be calibrated at its intended use temperature if this is within the specified operating temperature range of 0°C to 40°C.

7.1.2 Warm-Up

The 5600 should be allowed to warm up for at least 1 hour before calibration.

7.2 Laser Calibration

This chapter describes how to calibrate the 5600 laser drivers.

7.2.1 Recommended Equipment

Recommended test equipment for calibrating the driver is listed in Table 1. Equipment other than that shown in the table may be used if the specifications meet or exceed those listed.

Description	Mfg./Model	Specification
DMM	HP 34401A	DC Amps @ 1.0A): ±1% Resistance (@ 10 ohms): 0.02%
Shunt	High Power, Low Temperature Coefficient	100mV at 200A
Optical Isolator	NEC PS2501-1	or equivalent, 6-pin
Connectors	D-sub, high power	9-pin male, 5-pin high power

Table 2 - Recommended Test Equipment

Artisan Technology Group - Quality Instrumentation ... Guaranteed | (888) 88-SOURCE | www.artisantg.com

7.2.2 Local Operation Current Source Calibration

This procedure calibrates the feedback circuits for constant current mode. The user enters the actual value of the current, as measured by an external DMM. The 5600 then automatically calibrates the laser feedback circuits.

a. Connect the shunt to the laser outputs. Connect a calibrated DMM across the shunt’s terminals to measure the voltage. Calculate the current in the following steps by using Ohm's Law:

$$I = V / R$$

where V is the measured voltage across the resistor, and R is the measured load resistance.

b. With the unit in Io mode, press the **LDD ON** key to turn the laser output on. If a laser on delay has been set, wait that amount of time to allow the laser output to engage.

c. Start the calibration procedure by first pressing the **MENU** button, then right arrow until the **Calibration** menu is reached, then presses the down arrow until the **Io Calibration** function is selected, then the right arrow key to execute the Io calibration function.

d. The output will be set at ½ full scale and allowed to settle. Once settled, enter the actual current measurement from the ammeter display, then select the **Next** soft button and press the right arrow.

e. The output will then be moved to ¼ the current set point and allowed to settle. Once settled, enter the actual current measurement from the ammeter display, then select the **Next** soft button and press the right arrow.

f. The calibration procedure is complete.

Artisan Technology Group - Quality Instrumentation ... Guaranteed | (888) 88-SOURCE | www.artisantg.com

7.2.3 Remote Operation Current Source Calibration

a. Connect the shunt to the laser outputs. Connect a calibrated DMM across the shunt's terminals to measure the voltage. Calculate the current in the following steps by using Ohm's Law:

$$I = V / R$$

where V is the measured voltage across the resistor, and R is the measured load resistance.

b. Select the channel via the **LAS:CHAN** command. Set the current limit to one-half scale plus 100 mA via the **LAS:LIM:LDI** command, output bandwidth as desired via the **LAS:MODE:I**, **LAS:MODE:ICW**, or **LAS:MODE:ILBW** command, and current set point to one-half scale via the **LAS:LDI** command.

c. Enter the **LAS:OUTPUT ON** command to turn the laser output on.

d. Enter the laser LDI calibration mode by issuing the **LAS:CAL:LDI** command.

e. Input the actual (measured) laser output current (as an <nrf value>) via the **LAS:LDI <nrf value>** command.

The 5600 will be ready to receive the current value when, after a **LAS:CAL:LDI?** query is sent, the response from the 5600 is "1".

f. Once the actual current value is entered via the **LAS:LDI** command, the 5600 will apply a new current equal to approximately one-fourth (¼) the previous set point.

The 5600 will be ready to receive the second current value when, after a **LAS:CAL:LDI?** query is sent, the response from the 5600 is "1".

g. Input the second actual (measured) laser output current as in Step e.

Artisan Technology Group - Quality Instrumentation ... Guaranteed | (888) 88-SOURCE | www.artisantg.com

h. Once the actual current value is entered via the second **LAS:LDI** command, the 5600 leaves the current calibration mode.

If, at any time prior to the second **LAS:LDI,** a command other than **LAS:LDI** or **LAS:CAL:LDI?** is sent to the 5600, the 5600 will cancel the calibration mode and then process the command(s).

The ***OPC?** query may be used to determine when the calibration is completed.

The operation complete flag (bit 0 of the Standard Event Status Register) may be used to trigger an interrupt. This type of interrupt is enabled by setting bit 0 of the Service Request Enable register and using the ***OPC** command.

7.2.4 Local Operation I_{PD} Current Calibration

This procedure calibrates the feedback circuits for constant I_{PD} and constant P_{PD} modes. The user enters the actual value of the current, as measured by an external DMM. The 5600 then automatically calibrates the laser feedback circuits.

The I_{PD} calibration circuit is diagrammed below.

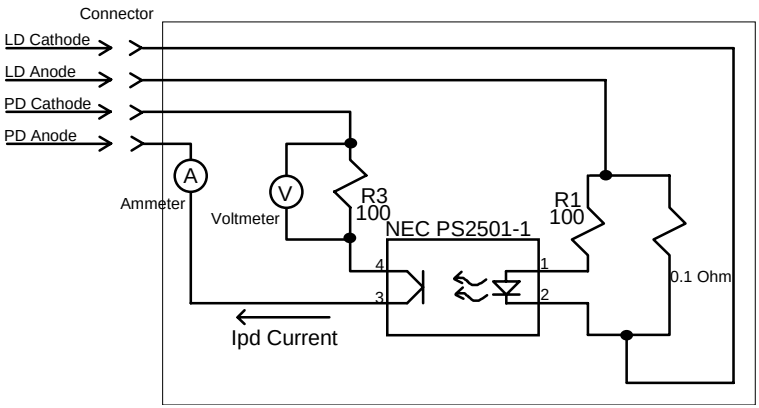

Figure 20 - I_{PD} Calibration Circuit

a. With the laser output off, connect a calibrated ammeter to the PD Anode output of the driver and connect the circuit of Figure 20 to the laser and PD outputs.

   If a calibrated ammeter (with 0.1 µA resolution) is not available, place a calibrated DMM (with 0.1 mV resolution) to measure the voltage across the resistor, R3, as shown in Figure 20. Calculate the current in the following steps by using Ohm's Law:

$$I = V / R$$

   where V is the measured voltage across the resistor, and R is the measured load resistance.

b. With the unit in Im mode, press the **LDD ON** key to turn the laser output on. If a laser on delay has been set, wait that amount of time to allow the laser output to engage.

c. Start the calibration procedure by first pressing the **MENU** button, then right arrow until the **Calibration** menu is reached, then presses the down arrow until the **Im Calibration** function is selected, then the right arrow key to execute the Im calibration function.

d. The output will be set at ½ full scale and allowed to settle. Once settled, enter the actual current measurement from the ammeter display, then select the **Next** soft button and press the right arrow.

e. The output will then be moved to ¼ the current set point and allowed to settle. Once settled, enter the actual current measurement from the ammeter display, then select the **Next** soft button and press the right arrow.

f. The calibration procedure is complete.

7.2.5 Remote Operation I_{PD} Current Calibration

a. With the laser output off, connect a calibrated ammeter to the photodiode anode output of the driver and connect the circuit of Figure 20 to the laser and photodiode outputs.

Artisan Technology Group - Quality Instrumentation ... Guaranteed | (888) 88-SOURCE | www.artisantg.com

If a calibrated ammeter (with 0.1 µA resolution) is not available, place a calibrated DMM (with 0.1 mV resolution) to measure the voltage across the resistor, R3, as shown in Figure 20. Calculate the current in the following steps by using Ohm's Law:

$$I = V / R$$

where V is the measured voltage across the resistor, and R is the measured load resistance.

b. Select the channel via the **LAS:CHAN** command. Set the laser current limit to full scale via the **LAS:LIM:LDI** command. Set the photodiode current set point to ½ full scale via the **LAS:MDI** command. Place the unit into constant photodiode current mode via the **LAS:MODE:MDI** command.

c. Enter the **LAS:OUTPUT ON** command to turn the laser output on.

d. Enter the **LAS:CAL:MDI** command to place the 5600 in its laser photodiode current calibration mode.

e. After a few seconds, the 5600 will be ready for the actual photodiode current to be entered via the **LAS:MDI** command. The measured value of the current should not be entered until the 5600 is ready to receive it.

   The 5600 will be ready to receive the current value when, after a **LAS:CAL:MDI?** query is sent, the response from the 5600 is "1".

f. Once the actual photodiode current value is entered via the **LAS:MDI** command, the 5600 will apply a new photodiode current equal to approximately one-fourth (¼) the previous set point.

   The 5600 will be ready to receive the second current value when, after a **LAS:CAL:MDI?** query is sent, the response from the 5600 is "1".

Artisan Technology Group - Quality Instrumentation ... Guaranteed | (888) 88-SOURCE | www.artisantg.com

g. Input the second actual (measured) photodiode current as in Step e.

h. Once the actual photodiode current value is entered via the second **LAS:MDI** command, the 5600 leaves the current calibration mode.

If, at any time prior to the second **LAS:MDI,** a command other than **LAS:MDI** or **LAS:CAL:MDI?** is sent to the 5600, the 5600 will cancel the calibration mode and then process the command(s).

The ***OPC?** query may be used to determine when the calibration is completed.

The operation complete flag (bit 0 of the Standard Event Status Register) may be used to trigger an interrupt. This type of interrupt is enabled by setting bit 0 of the Service Request Enable register and using the ***OPC** command.

7.2.6 Local Operation Laser Voltage Measurement Calibration

a. With the output off, connect a calibrated voltmeter, in parallel with the shunt to the laser output terminals.

b. With the unit in Io mode, press the **LDD ON** key to turn the laser output on, if it is not on already. If a laser on delay has been set, wait that amount of time to allow the laser output to engage.

c. Start the calibration procedure by first pressing the **MENU** button, then right arrow until the **Calibration** menu is reached, then presses the down arrow until the **Im Calibration** function is selected, then the right arrow key to execute the Im calibration function.

d. The current output will be set at ½ full scale and allowed to settle. Once settled, enter the actual voltage measurement from the ammeter display, then select the **Next** soft button and press the right arrow.

Artisan Technology Group - Quality Instrumentation ... Guaranteed | (888) 88-SOURCE | www.artisantg.com

e. The output will then be moved to ¼ of the current set point and allowed to settle. Once settled, enter the actual voltage measurement from the ammeter display, then select the **Next** soft button and press the right arrow.

f. The calibration procedure is complete.

7.2.7 Remote Operation Laser Voltage Measurement Calibration

a. With the output off, connect a calibrated voltmeter, in parallel with the shunt to the laser output terminals.

b. Select the channel via the **LAS:CHAN** command. Set the voltage limit to full scale via the **LAS:LIM:LDV** command, and the current set point necessary to read approximately 80% of full scale voltage. Place the unit into constant current mode via the **LAS:MODE:LDI** command.

c. Enter the **LAS:OUTPUT ON** command to turn the laser output on.

d. Enter the laser voltage calibration mode by issuing the **LAS:CAL:LDV** command.

e. Input the actual (measured) laser voltage (as an <nrf value>) via the **LAS:LDV <nrf value>** command.

   The 5600 will be ready to receive the value when, after a **LAS:CAL:LDV?** query is sent, the response from the 5600 is "1".

f. Once the actual voltage value is entered via the **LAS:LDV** command, the 5600 will apply a new current equal to approximately one-fourth (¼) the previous set point.

   The 5600 will be ready to receive the second voltage value when, after a **LAS:CAL:LDV?** query is sent, the response from the 5600 is "1".

g. Input the second actual (measured) voltage as in Step e.

Artisan Technology Group - Quality Instrumentation ... Guaranteed | (888) 88-SOURCE | www.artisantg.com

h. Once the actual voltage value is entered via the **LAS:LDV** command, the 5600 leaves the current calibration mode.

If, at any time prior to the second **LAS:LDV,** a command other than **LAS:LDV** or **LAS:CAL:LDV?** is sent to the 5600, the 5600 will cancel the calibration mode and then process the command(s).

The ***OPC?** query may be used to determine when the calibration is completed.

The operation complete flag (bit 0 of the Standard Event Status Register) may be used to trigger an interrupt. This type of interrupt is enabled by setting bit 0 of the Service Request Enable register and using the ***OPC** command.

7.2.8 Local Operation Pulse Width and Frequency Calibration

a. **TBD TBD TBD**
Edit as necessary!!!!

With the output off, connect a precision current measurement device in series with a resistive load across the laser output terminals.

b. With the unit in Io mode, press the **LDD ON** key to turn the laser output on, if it is not on already. If a laser on delay has been set, wait that amount of time to allow the laser output to engage.

c. Start the calibration procedure by first pressing the **MENU** button, then right arrow until the **Calibration** menu is reached, then presses the down arrow until the **Im Calibration** function is selected, then the right arrow key to execute the Im calibration function.

d. The current output will be set at ½ full scale and allowed to settle. Once settled, enter the actual voltage measurement from the ammeter display, then select the **Next** soft button and press the right arrow.

Artisan Technology Group - Quality Instrumentation ... Guaranteed | (888) 88-SOURCE | www.artisantg.com

e. The output will then be moved to ¼ of the current set point and allowed to settle. Once settled, enter the actual voltage measurement from the ammeter display, then select the **Next** soft button and press the right arrow.

f. The calibration procedure is complete.

7.2.9 Remote Operation Pulse Width and Frequency Calibration

a. Remote calibration not available.

Artisan Technology Group - Quality Instrumentation ... Guaranteed | (888) 88-SOURCE | www.artisantg.com

C H A P T E R 8

8. Factory Service

8.1 Introduction

This section contains information regarding obtaining factory service for the Model 5600. The user should not attempt any maintenance or service of this instrument and/or accessories beyond the procedures given in chapters 6 and 7. Any problems which cannot be resolved using the guidelines listed in chapters 6 and 7 should be referred to Newport Corporation factory service personnel. Contact Newport Corporation or your Newport representative for assistance.

8.2 Obtaining Service

To obtain information concerning factory service, contact Newport Corporation or your Newport representative. Please have the following information available:

1. Instrument model number (On front panel)

2. Instrument serial number (On rear panel)

3. Description of the problem.

If the instrument is to be returned to Newport Corporation, you will be given a Return Materials Authorization (RMA) number, which you should reference in your shipping documents as well as clearly marked on the outside of the shipping container.

Please fill out the service form, located on the following page, and have the information ready when contacting Newport Corporation. Return the completed service form with the instrument.

Artisan Technology Group - Quality Instrumentation ... Guaranteed | (888) 88-SOURCE | www.artisantg.com

Artisan Technology Group - Quality Instrumentation ... Guaranteed | (888) 88-SOURCE | www.artisantg.com

Service Form

Newport Corporation
USA Office: 949/863-3144
FAX: 949/253-1800

Name _____ RETURN AUTHORIZATION # _____

Company _____ (Please obtain prior to return of item)

Address _____

Country _____ Date _____

P.O. Number _____ Phone Number _____

Item(s) being returned:
Model # _____ Serial # _____

Description _____

Reason for return of goods (please list any specific problems) _____

_____

List all control settings and describe problem _____

_____

_____ (Attach additional sheets as necessary)

Show a block diagram of your measurement system including all instruments connected (whether power is turned on or not). Describe signal source. If source is laser, describe output mode, peak power, pulse width, and repetition rate.

(continued on next page)

Artisan Technology Group - Quality Instrumentation ... Guaranteed | (888) 88-SOURCE | www.artisantg.com

Where is measurement being performed?
(factory, controlled laboratory, out-of-doors, etc.) _____

What power line voltage is used? _____ Variation? _____

Frequency? _____ Ambient Temperature? _____

Any additional information. (If special modifications have been made by the user, please describe below)

_____

_____

_____

C H A P T E R 9

9. Error Messages

9.1 Introduction

Error messages may appear on the display when error conditions occur in the respective functions of the 5600.

In remote operation, the current error list can be read by issuing the "ERR?" query. When this is done, a string will be returned containing all of the error messages which are currently in the error message queue.

The errors codes are numerically divided into areas of operation as shown below.

Error Code Range	Area of Operation
E-001 to E-099	Internal Program Errors
E-100 to E-199	Parser Errors
E-200 to E-299	Execution Control Errors
E-300 to E-399	GPIB/RS232 Errors
E-500 to E-599	Laser Control Errors
E-900 to E-999	System Errors

Table 3 contains all of the error messages that may be generated by the 5600.

Table 3 - Error Codes

Error Code	Explanation
E-001	Memory allocation failure.
E-002	Floating point error
E-104	Numeric type not defined.
E-106	Digit expected.
E-107	Digit not expected.
E-115	Identifier not valid.
E-116	Parser syntax error, character was not expected.
E-126	Too few or too many program data elements.
E-201	Value out of range.
E-214	Length exceeds maximum.
E-217	Attempted to recall a bin from a unsaved position.
E-218	Additional link could not be added to the link table because the link table is already full.

Artisan Technology Group - Quality Instrumentation ... Guaranteed | (888) 88-SOURCE | www.artisantg.com

Error Code	Explanation
E-301	A response message was ready, but controller failed to read it.
E-302	5600 is talker, but controller didn't read entire message.
E-303	Input buffer overflow
E-304	Output buffer overflow
E-305	Parser buffer overflow
E-501	Laser interlock disabled output.
E-502	Laser hard current limit disabled output
E-503	Laser open circuit disabled output.
E-504	Laser current limit disabled output.
E-505	Laser voltage limit disabled output.
E-506	Laser photodiode current limit disabled output
E-507	Laser photodiode power limit disabled output.
E-509	Laser short circuit disabled output
E-510	Laser out of tolerance disabled output.
E-512	Analog section status is all 1's or 0's (power down).
E-514	Laser mode change disabled output
E-515	Laser bandwidth change disabled output
E-516	Incorrect Configuration for Calibration Sequence to start.
E-517	Calibration for Laser Diode current must have the output on to start.
E-518	Calibration for the Monitor Diode must have the output on and the sensitivity set to zero to start.
E-531	Laser link condition forced output on
E-532	Laser link condition forced output off
E-533	Attempted to select non-laser channel for laser operation.
E-900	Calculation Error shutdown output
E-901	System over temperature shutdown all outputs
E-902	Front laser enable panel key lock in off position, shutdown all laser outputs
E-903	Loading of a saved bin shutdown driver output

Artisan Technology Group - Quality Instrumentation ... Guaranteed | (888) 88-SOURCE | www.artisantg.com

C H A P T E R 1 0

10. Specifications

	10 Amp		20 Amp		40 Amp		65 Amp	
	QCW	**CW**	**QCW**	**CW**	**QCW**	**CW**	**QCW**	**CW**
Output Current								
Range (A)	0-9.5	0-10	0-19	0-20	0-38	0-40	0-62	0-65
Resolution (16 bit) (µA)	153		305		610		992	
Accuracy[1]	± (0.03% + 308 µA)		± (0.03% + 615 µA)		± (0.03% + 1.2 mA)		± (0.03% + 2 mA)	
Noise & Ripple[2] (rms) (mA)				<10				
Temperature Coefficient (ppm/°C FS)				<200				
Short Term Stability (1 hr) (ppm FS)				<200				
Long Term Stability (24 hrs) (ppm FS)			<250					
Compliance Voltage[3]								
Range (Volts)	1.5-29	1.5-30	1.5-14	1.5-15	1.5-7	1.5-8	1.5-4	1.5-5
Current Limit								
Range (A)	0-10		0-20		0-40		0-65	
Resolution (mA)				100				
Accuracy (mA)				100				
Pulse Width[4]								
Pulse Width Range (µsec)				100 - 1000				
Resolution (µsec)				10				
Accuracy[1]				± (2% +20 µs)				
Transition Time[7] (µsec)				<40				
Pulse over/under shoot (%Pk/µs)				<5/<200				
Pulse "zero" current (% Pk)				<1				
Duty Cycle[4]								
Range[4] (%)				0.25 – 20				
Pulse Repetition Rate[4]								
Range (Hz)				25 to 1000				
Resolution (Hz)				1				
Accuracy[1]				± (2% + 2 Hz)				
Jitter (%)				<10				

[1] ± (% reading + fixed error).
[2] True rms, 3 Hz to 300 kHz, ½ scale, resistive load.
[3] Output requires a minimum voltage drop of 1.5 volts.
[4] Applies only when operating in the QCW mode.
[7] With Newport 1 meter cable: 10% to 90% of set current.

Artisan Technology Group - Quality Instrumentation ... Guaranteed | (888) 88-SOURCE | www.artisantg.com

Trigger Input[4]

Type	Positive edge trigger (1 µs min width)
Signal Input	TTL or 5 V CMOS
Input Impedance (kΩ)	10
Max/Min Rate (kHz/Hz)	1/1

Trigger Output[4]

Type	Positive logic, tracks pulse width, LSTTL or 5 V CMOS
Output Impedance	100 Ohms

Power Monitor Input- Photodiode (PD)

Input Type	Transimpedance
Temperature Coefficient (% FS/°C)	< 0.02
Range	0 µA to 20 mA
Stability (24 hour, % FS)	± 0.02
Accuracy[1]	± (0.004% + 1 µA)
Reverse Bias (Volts ± 10%)	5

Power Monitor Input-Thermopile

Input Type	Single Ended
Range (mV)	0 - 16
Stability (24 hrs)(%FS)	± 0.2
Accuracy (µV)	16

Temperature Monitor Input

Sensor	10 kOhm Thermistor
Range (°C)	6 to 150
Temp. Limit	User Settable

Current Monitor

Transfer Function (A/V)	4	8	16	26
Output Impedance		1 kOhm		

Internal Function Generator[5]

Waveforms	Sine, Square
Frequency Range[6]	200 Hz to 300 kHz
Squarewave Duty Cycle [%]	50 ± 5
Independent Output Set-Points	I_{max}, I_{min}
Resolution	1 Amp
Accuracy	1 Amp

[5] Applies only when operating in the CW mode.
[6] Io roll-off may begin sooner than upper range.

Artisan Technology Group - Quality Instrumentation ... Guaranteed | (888) 88-SOURCE | www.artisantg.com

External Modulation[5]

Input range, Input Impedance	10V, 10 kOhm			
Transfer Function (A/V)	- 1	- 2	- 4	- 6.5
Bandwidth (3 dB)	DC to 8 kHz			

Measurement Display

Output Current Range (A)	0 to 10.00	0 to 20.00	0 to 40.00	0 to 65.00
Output Current Resolution (mA)	10			
Output Current Accuracy[1]	± (0.2% + 10 mA) ± (0.02% + 10 mA)	± (0.2% + 10 mA) ± (0.02% + 10 mA)	± (0.2% + 12 mA) ± (0.02% + 10 mA)	± (0.2% + 20 mA) ± (0.02% + 10 mA)
Forward Voltage Range (Volts)	0.000 – 30.000	0.000 – 15.000	0.000 – 8.000	0.000 – 5.000
Forward Voltage Resolution (mV)	1			
Forward Voltage Accuracy[1]	± (0.1% + 100 mV) ± (0.05% + 30 mV)	± (0.1% + 100 mV) ± (0.05% + 30 mV)	± (0.1% + 100 mV) ± (0.05% + 30 mV)	± (0.1% + 100 mV) ± (0.05% + 30 mV)
Photodiode Current Range (µA)	15 – 20,000			
Photodiode Current Resolution (µA)	0.1			
Photodiode Current Accuracy[1]	± (0.1% + 20 µA)			
PD Resp. Range (µA/mW)	0.0 – 10,000.0			
PD Resp. Resolution (µA/mW)	0.1			
Thermopile Resp. Range (mV/W)	0.0 – 99.00			
Thermopile Resp. Resolution (mV/W)	0.01			
Optical Power Range (W)	0.00 – 20.00			
Optical Power Resolution (mW)	10			
Optical Power Accuracy (Watts)	± 0.04			

Display	
Type	4x20 LCD character display
Back Lighting	Green LED
Controls	Brightness and Contrast (contrast optimizes viewing angle)
Laser Active	Green LED indicates that Laser Diode output is on.
Connectors	
Output	5-pin, female D-Sub 5W5
Interlock/Detector	9-pin, female D-Sub
Detector Input	BNC
Modulation	BNC
Trigger In	BNC
Trigger Out	BNC
Current Monitor	BNC
Chassis Ground	4 mm Banana Jack
GPIB Connector	24 pin IEEE-488
RS232 Connector	9-pin male D-sub
Power Requirements	90 to 250 volts, 6 Amps Max. (user selectable), 50 / 60 Hz
Size (H x W x D)	89 mm x 356 mm x 356 mm (3.5 " x 14" x 14")
Weight	6.7 kg (16 lbs.)
Operating Temperature	0 to +40°C, < 70% relative humidity non-condensing
Storage Temperature	-20°C to +60°C, < 90% relative humidity non-condensing
Laser Safety Features	Output On/Off Key switch, Interlock, Output Delay (meets CDRH US21 CFR 1040.10).
Isolation	Laser output electrically isolated from earth ground.

In accordance with ongoing efforts to continuously improve our products, Newport Corporation reserves the right to modify product specifications without notice and without liability for such changes.

Artisan Technology Group - Quality Instrumentation ... Guaranteed | (888) 88-SOURCE | www.artisantg.com

Artisan Technology Group

Artisan Technology Group is your source for quality new and certified-used/pre-owned equipment

- FAST SHIPPING AND DELIVERY
- TENS OF THOUSANDS OF IN-STOCK ITEMS
- EQUIPMENT DEMOS
- HUNDREDS OF MANUFACTURERS SUPPORTED
- LEASING/MONTHLY RENTALS
- ITAR CERTIFIED SECURE ASSET SOLUTIONS

SERVICE CENTER REPAIRS
Experienced engineers and technicians on staff at our full-service, in-house repair center

InstraView℠ REMOTE INSPECTION
Remotely inspect equipment before purchasing with our interactive website at ***www.instraview.com*** ↗

WE BUY USED EQUIPMENT
Sell your excess, underutilized, and idle used equipment
We also offer credit for buy-backs and trade-ins
www.artisantg.com/WeBuyEquipment ↗

LOOKING FOR MORE INFORMATION?
Visit us on the web at ***www.artisantg.com*** ↗ for more information on price quotations, drivers, technical specifications, manuals, and documentation

Contact us: (888) 88-SOURCE | sales@artisantg.com | www.artisantg.com