MOTOROLA COMPUTER GROUP

Board Level Products

MPMC860 Series
PMC Communication Controllers

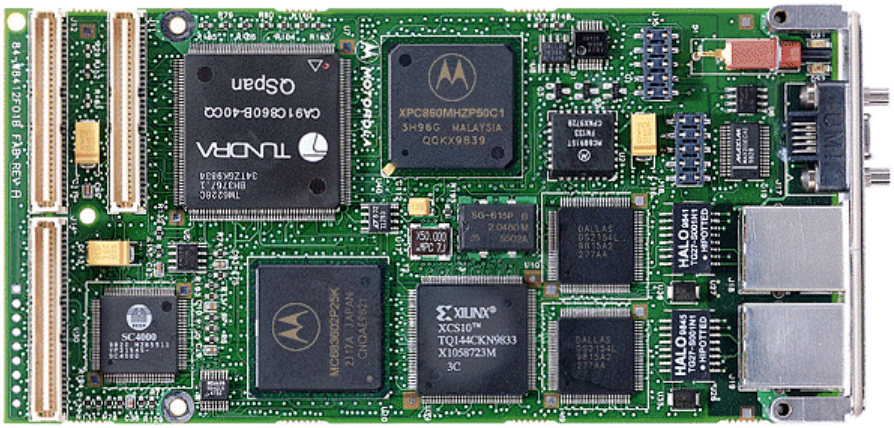

Advantages

The MPMC860 series of single-wide PCI Mezzanine Cards (PMCs) provides powerful building blocks for communications applications requiring T1 or E1 connectivity.

Powered by the MPC860 PowerPC® Quad Integrated Communications Controller (PowerQUICC®), the MPMC860 series is designed to meet the needs of embedded application developers addressing high-bandwidth voice and data switching designs.

An optional SCbus™ controller enables connectivity to an SCbus switching fabric. This provides a high-bandwidth, time division multiplexed (TDM) telephony bus for distributed, symmetrical switching. The SCbus version also incorporates a MC68360 to provide additional TDM channels for the SCbus or for E1/T1 links.

When coupled with CompactPCI® or VME processor modules, the MPMC860 series makes an ideal platform for applications in areas such as Wireless Infrastructure, Unified Messaging Servers, Enterprise Computer Telephony, Intelligent Peripherals and the Advanced Intelligent Network.

MOTOROLA

Features

- MPC860MH PowerPC Quad Integrated Communications Controller
- 16MB of on-board DRAM
- 2MB of on-board Flash memory
- 32-bit, 33 MHz, PCI 2.1 compliant interface
- Single-wide PMC form factor
- IEEE P1386.1 PMC compliant
- Optional MC68360 coprocessor in slave mode providing additional TDM channel processing
- Optional SC4000 SCbus switch fabric controller operating as SCbus clock master (2/4/8MHz) or as SCbus clock slave
- Dual T1 or E1 I/O via RJ-45 connectors to PMC front panel or rear I/O to PMC connector Pn4
- Serial debug port available on front panel or through PMC connector Pn4
- Background Debug Mode (BDM) and JTAG header available on-board
- Real-time clock
- 8-level interrupt handler
- Watchdog timer
- Software programmable Reset register for individual on-board devices
- Two software programmable status LEDs
- Flash resident Board Initialization and Self Test monitor, including SCbus and E1/T1 loopback tests
- Supported by industry-standard real-time operating systems

The Motorola Commitment

Motorola Computer Group is committed to providing best-in-class embedded computing solutions. The MPMC860 reinforces this commitment by providing superior hardware, price performance, and faithfulness to the tenets of open computing: modularity, scalability, portability, and interoperability.

The MPMC860 is offered with a five-year limited warranty which reduces the cost of ownership and demonstrates our commitment to quality and reliability of products to our OEM partners. Motorola Computer Group is ISO9001 registered, and provides world class quality in manufacturing, engineering, sales, and marketing.

Ordering Information

Part Number	Description
MPMC860-001	Dual E1 PMC; MPC860MH @ 50 MHz, 16MB DRAM, 2MB Flash, front panel I/O
MPMC860-002	Dual T1 PMC; MPC860MH @ 50 MHz, 16MB DRAM, 2MB Flash, front panel I/O
MPMC860-003	Dual E1 PMC; MPC860MH @ 50 MHz, 16MB DRAM, 2MB Flash, rear I/O
MPMC860-004	Dual T1 PMC; MPC860MH @ 50 MHz, 16MB DRAM, 2MB Flash, rear I/O
MPMC860SC-001	Dual E1 PMC; SCbus, MPC860MH @ 50 MHz, MC68360 @ 25 MHz, 16MB DRAM, 2MB Flash, front panel I/O
MPMC860SC-002	Dual T1 PMC; SCbus, MPC860MH @ 50 MHz, MC68360 @ 25 MHz, 16MB DRAM, 2MB Flash, front panel I/O
MPMC860SC-005	Dual E1 PMC; SCbus, MPC860MH @ 50 MHz, MC68360 @ 25 MHz, 16MB DRAM, 2MB Flash, no framers, no transformers, no I/O
Documentation	
MPMC860A/IH	MPMC860 Installation and Use manual
MPMC860A/PG	MPMC860 Programmer's Reference Guide

Note

Following release of the product, documentation is available for on-line viewing and ordering at http://www.mcg.mot.com/literature.

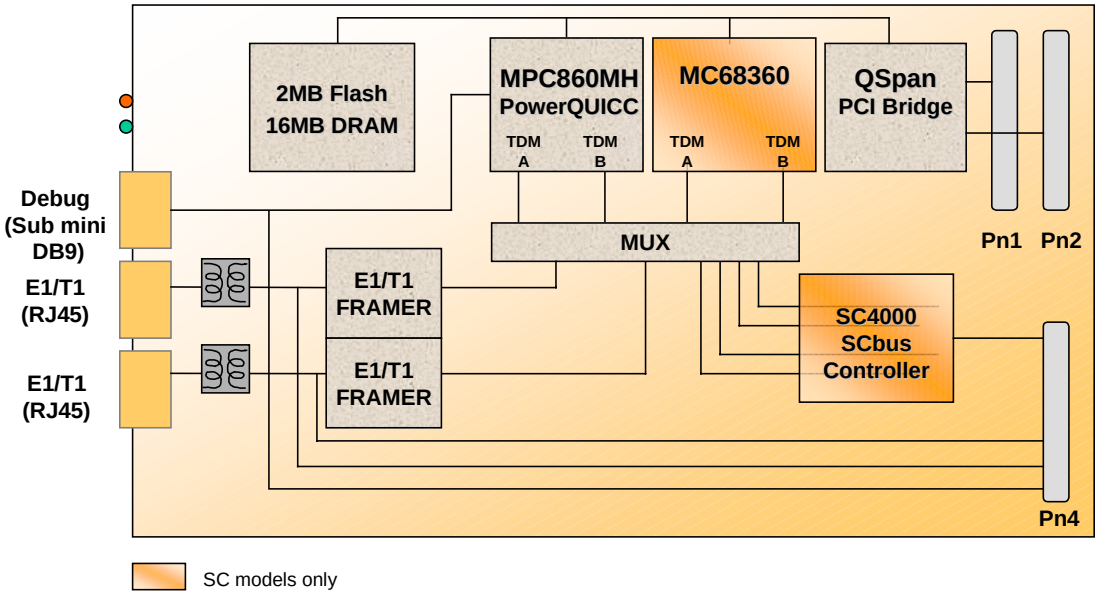

MPMC860 Block Diagram

MPMC860 Overview

Motorola MPC860 Processor

The MPC860MH PowerPC Quad Integrated Communications Controller (PowerQUICC) is a versatile one-chip dual-processor architecture which provides both a high-performance general-purpose processor for application programming as well as a special-purpose communications processor module (CPM) uniquely designed for communications needs. The CPM contains features that allow the MPC860 to excel in communications and networking products as did the MC68360 QUICC which preceded it.

The CPU on the MPC860 is a 32-bit PowerPC implementation that incorporates memory management units (MMUs) and instruction and data caches.

The CPM provides the communication features of the MPC860. Included are a RISC processor, four serial communication controllers (SCC), two serial management controllers (SMC), one serial peripheral interface (SPI), one I^2C interface, 5 Kbytes of dual-port RAM, an interrupt controller, a time-slot assigner, three parallel ports, a parallel interface port, four independent baud rate generators, and sixteen serial DMA channels to support the SCCs, SMCs, SPI, and I^2C. The SDMAs provide two channels of general-purpose DMA capability for each communications channel. They offer high-speed transfers, 32-bit data movement, buffer chaining, and independent request and acknowledge logic. The addition of a multiply-and-accumulate (MAC) function on the CPM further enhances the MPC860, enabling various modem and DSP applications.

2nd Processor

The MPMC860SC variant supports a second processor, the MC68360. This processor runs in slave mode, thus enabling the MPC860MH to use its internal CPM. The MC68360 is only present on the MPMC860SC variant where it provides two additional TDM interfaces to the SC4000 or to the framers for channel processing.

SCbus Bridge

The SC4000 is used as the TDM switch on the MPMC860SC. The SCbus side of the SC4000 is connected through the Pn4 connector to the carrier board. The SC4000 is capable of acting as a clock master or slave on the SCbus. The SC4000 is capable of receiving data from the processors and the two E1/T1 ports. The SCbus Message Channel output of the SC4000 is connected to the MPC860MH (SCC4) for common channel signaling.

PCI Host Bridge

The Tundra QSpan™ PCI bridge CA91C860 provides the bridge function between the MPC860 bus and the PCI bus. It provides 32-bit addressing and 32-bit data. The QSpan supports PowerQUICC processor external bus frequencies up to 25 MHz and PCI frequencies up to 33 MHz. The interface is PCI revision 2.1 compliant.

DRAM Memory

The MPMC860 is populated with 16MB of 32-bit, 60 ns DRAM. The DRAM memory is controlled by the MPC860MH processor.

Flash Memory

The MPMC860 contains one bank of Flash memory which is populated with one 2MB device (AM29F016). The data bus of the Flash is 8-bits wide. The PMC860 is delivered with the Flash memory containing the Board Initialization and Self-Test firmware.

E1/T1 Controller

The Dallas Semiconductor DS2154 is used as the E1 controller and the DS2152 as theT1 controller. The controller chips are capable of driving 100 Ohm E1 lines or 120 Ohm T1 lines respectively.

Specifications

Processor

50 MHz MPC860MH PowerPC Quad Integrated Communications Controller

Second Processor

25 MHz MC68360 Quad Integrated Communications Controller (on MPMC860SC models)

Cache

Level 1: 4KB instruction, 4KB data (MPC860MH resident)

Memory

DRAM: 32-bit wide EDO memory, 60 ns, no parity

Bus Interface

PCI bus: PCI Specification Rev. 2.1 compliant, 32-bit, 33 MHz

SCbus: ANSI/VITA-6 1994 compliant

Real-Time Clock

The real-time clock (RTC) in the MPC860MH is software programmable. Battery backup is not provided.

Interrupts

An interrupt controller is included in the MPC860MH. Up to 8 external interrupt sources can be routed to the controller.

Watchdog Timer

One hardware watchdog timer is implemented in addition to the MPC860-based watchdog timers.

I/O Interfaces

T1/E1 Ports: Two RJ-45 connectors on front panel

Debug: One EIA-232 9-pin Dsub on front panel

BDM: 10-pin on-board header

JTAG: 10-pin on-board header

Firmware

Flash-resident Board Initialization and Self Test monitor, including SCbus and E1/T1 loopback tests

LEDs

Front Panel LEDs: One green, one amber; both software programmable

Mechanical

Single-wide PMC board (74 mm x 149 mm); conforms to Common Mezzanine Card Specification P1386 Draft 2.0 and PCI Mezzanine Card Specification P1386.1 Draft 2.0

Power Requirements

	Typical	Maximum
+3.3V:	0.25 A	0.35 A
+5V:	0.80 A	1.00 A

+12V and –12V are not used.

Environmental

(verification pending)

	Operating	Storage/Transit
Temperature:	0°C to +55°C forced air cooling	–40° C to +65° C
Humidity (NC):	10% to 80%	10% to 90%
Altitude:	5,000 m	15,000 m
Vibration:	2 G RMS, 20–2000 Hz random	8 G RMS, 20–2000 Hz random

Demonstrated MTBF

(based on sample testing in accelerated stress environment)

TBD (target is 100,000 hours with 90% confidence)

Safety

All printed wiring boards (PWBs) are manufactured with a flammability rating of 94V-0 by UL recognized manufacturers.

Electromagnetic Compatibility (EMC)

Intended for use in systems meeting the following regulations:

U.S.: FCC Part 15, Subpart B, Class A (non-residential)

Canada: ICES-003, Class A (non-residential)

Motorola Computer Group board products are tested in a representative system to the following standards (results pending):

CE Mark per European EMC Directive 89/336/EEC with Amendments; Emissions: EN55022 Class B; Immunity: EN50082-1

For more information, visit our World Wide Web site at **http://www.mcg.mot.com**
To call us dial **1-800-759-1107** in the U.S. and **512-434-1526** outside of the U.S.
Corporate headquarters address: Motorola Computer Group, 2900 S. Diablo Way, Tempe, AZ 85282

MOTOROLA
Computer Group

Copyright 1999 Motorola, Inc.
Data Sheet: PM860-D1

Motorola, the Motorola logo, and PowerQUICC are registered trademarks of Motorola, Inc. PowerPC and the PowerPC logo are registered trademarks of International Business Machines Corporation and are used by Motorola, Inc. under license from International Business Machines Corporation. SCbus is a trademark of Dialogic Corporation. CompactPCI is a registered trademark of the PCI Industrial Computer Manufacturers Group. QSpan is a trademark of Tundra Semiconductor Corporation. All other names, products, and/or services mentioned may be trademarks or registered trademarks of their respective holders.

This data sheet identifies products, their specifications, and their characteristics, which may be suitable for certain applications. It does not constitute an offer to sell or a commitment of present or future availability, and should not be relied upon to state the terms and conditions, including warranties and disclaimers thereof, on which Motorola may sell products. A prospective buyer should exercise its own independent judgement to confirm the suitability of the products for particular applications. Motorola reserves the right to make changes, without notice, to any products or information herein which will, in its sole discretion, improve reliability, function, or design. Motorola does not assume any liability arising out of the application or use of any product or circuit described herein; neither does it convey any license under its patent or other intellectual property rights or under others. This disclaimer extends to any prospective buyer, and it includes Motorola's licensee, licensee's transferees, and licensee's customers and users. Availability of some of the products and services described herein may be restricted in some locations.