Artisan Technology Group

Artisan Technology Group is your source for quality new and certified-used/pre-owned equipment

- FAST SHIPPING AND DELIVERY
- TENS OF THOUSANDS OF IN-STOCK ITEMS
- EQUIPMENT DEMOS
- HUNDREDS OF MANUFACTURERS SUPPORTED
- LEASING/MONTHLY RENTALS
- ITAR CERTIFIED SECURE ASSET SOLUTIONS

SERVICE CENTER REPAIRS
Experienced engineers and technicians on staff at our full-service, in-house repair center

InstraView℠ REMOTE INSPECTION
Remotely inspect equipment before purchasing with our interactive website at ***www.instraview.com*** ↗

WE BUY USED EQUIPMENT
Sell your excess, underutilized, and idle used equipment
We also offer credit for buy-backs and trade-ins
www.artisantg.com/WeBuyEquipment ↗

LOOKING FOR MORE INFORMATION?
Visit us on the web at ***www.artisantg.com*** ↗ for more information on price quotations, drivers, technical specifications, manuals, and documentation

Contact us: (888) 88-SOURCE | sales@artisantg.com | www.artisantg.com

PAYNE ENGINEERING
Rt. 29 ⎤ Scott Depot WV ⎤ 25560-0070

Model 18TBP/TB
SCR Power Controls

APPLICATION ASSISTANCE - 304/757-7354
24 HOUR FAX - 304/757-7305

Model 18TBP/TB

- **Description:** Variable-Voltage Power Control
- **Product Range:** 120-240 VAC, 5-25 amps.
- **Application** Resistance Loads

FEATURES

- All Solid-State Construction
- Short Circuit Protection
- Integral Heatsink Chassis
- No Thermal Derating

TYPICAL APPLICATIONS

- Replace Variable Transformers
- Electric Heater Control
- Light Dimming
- Hot-Wire Cutting
- Heat Sealing and Packaging
- Plastic Molding and Extruding
- Food Preparation Equipment

Model 18TBP/TB controls provide infinitely variable control of single-phase a.c. voltage to resistive heating elements. These controls are solid-state replacements for variable transformers, mercury relays, saturable core reactors, and electromechanical contactors. Power Triacs replace contacts and brushes to control electric power without moving parts, and, when operated within their stated ratings for current, voltage, and temperature, have no known MTBF or life expectancy rating.

PANEL- OR CHASSIS-MOUNT

Model 18TBP controls are compact, lightweight packages that employ single hole mounting to panels and enclosure doors. Model 18TB controls are designed for rear or rack mounting. Both utilize an electrically isolated heatsink chassis.

EXCLUSIVE ADVANCED TECHNOLOGY: Three Pillars Of Protection

Model 18TBP/TB controls incorporate exclusive design features to protect power semiconductor components against damage. “2 millisecond” fuses protect against short-circuit damage; an R-C snubber network protects against dv/dt failure; an integral heatsink chassis allows continuous operation in ambients to 50°C with no derating.

SPECIFICATIONS

Power Circuit: power Triac with parallel R-C circuit for dv/dt protection and current-clamping 2 millisecond fuse for short-circuit protection.

Control Circuit: R-C network with variable-resistance potentiometer adjusts firing capacitor into bilateral diode connected to power Triac gate for stable, full-range control.

Mains Frequency: 50/60 Hz.

Output Voltage: 0-95% of input.

Overall Efficiency: 99%.

Power Loss: approximately 1.5 watts/amp.

Voltage Drop Across Power Circuit at 100% Output: 1-2 volts maximum/phase.

Control Input: manual control via variable potentiometer.

Control Power: 1 watt.

Fuse Protection: 2 millisecond I^2t fuses are factory tested and coordinated with all power semiconductors, considering:

a. fuse element melt time t_{melt};
b. peak melt current I_{melt};
c. arc quench time t_{arc};
d. peak arc current I_{arc}.

Ambient Temperature Range: 10 to +50°C.

Terminal Connections: Bakelite or thermoplastic blocks.

SIZING CONSIDERATIONS

Model 18TBP/TB controls are rated for use with constant resistance loads. Size units by actual load current, not kW.

1> Always use maximum possible load current for sizing purposes.

2> The amp rating is determined by the fuse. Current draw must not exceed the fuse rating at any time.

3> Rated voltage of connected load should match control input voltage.

SIZING EXAMPLE

Application: single-phase, 800 watt nichrome heating element; input voltage 120 VAC, 60 Hz.

Model Number Selection:

a. Triac-based variable-voltage: SC
b. Panel-mount: E
c. 120 VAC input: 12
d. Amp rating, calculated as follows:

$\frac{800}{120} = 6.66$ amps

Since 6.66<10, amp rating: -10

Model Number: SCE12-10.

WHEN ORDERING, SPECIFY:

- Model Number
- Input Voltage
- Load Specifications

PERFORMANCE NOTE: Triac power circuits may “slave” when multiple units are used on 240 VAC lines derived from three phase mains. For optimum performance, use on single phase, 240 VAC derived from 3-wire, 120/240 VAC mains.

Artisan Technology Group - Quality Instrumentation ... Guaranteed | (888) 88-SOURCE | www.artisantg.com

Model 18TBP/TB
SCR Power Controls

PAYNE ENGINEERING
Rt. 29 ⎤ Scott Depot WV ⎤ 25560-0070

APPLICATION ASSISTANCE - 304/757-7354
24 HOUR FAX - 304/757-7305

Model Number	Max. Amps	KVA @ Max. Rated Voltage	Fuse Number	OPEN CHASSIS DIMEN-SIONS Inches (millimeters) Height	Width	Depth
Single-Phase, 120 VAC, 50/60 Hz Input, 0-118 VAC Output						
18TBP-1-5	5	0.6	49C25-10	3.2 (81)	2.5 (64)	2.5 (54)
18TBP-1-10	10	1.2	49C25-10	3.2 (81)	2.5 (64)	2.5 (54)
18TBP-1-15	15	1.8	49C25-15	3.2 (81)	2.5 (64)	2.5 (54)
18TB-1-15	15	1.8	49C25-15	4 (102)	4 (102)	2.6 (66)
18TB-1-25	25	3.0	49B25-30	6 (152)	4 (102)	2.75 (70)
Single-Phase, 208/220/240 VAC Input, 0-206/218/238 VAC Output						
18TBP-2-5	5	1.2	49C25-10	3.2 (81)	2.5 (64)	2.5 (54)
18TBP-2-10	10	2.4	49C25-10	3.2 (81)	2.5 (64)	2.5 (54)
18TBP-2-15	15	3.6	49C25-15	3.2 (81)	2.5 (64)	2.5 (54)
18TB-2-15	15	3.6	49C25-15	4 (102)	4 (102)	2.6 (66)
18TB-2-25	25	6.0	49B25-30	6 (152)	4 (102)	2.75 (70)

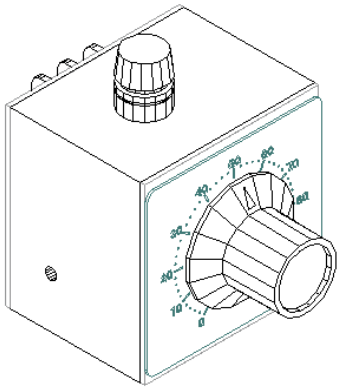

MODEL 18TBP

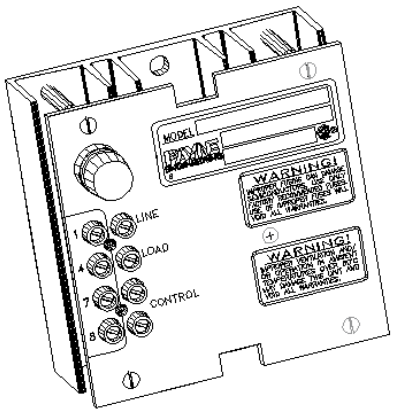

MODEL 18TB

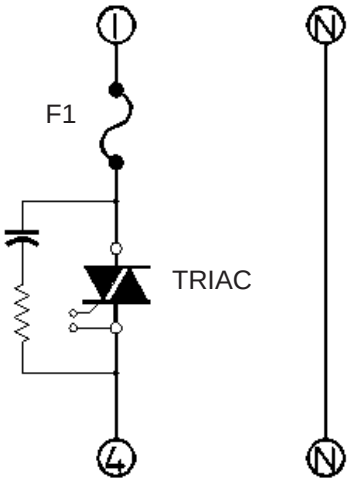

POWER CIRCUIT SCHEMATIC

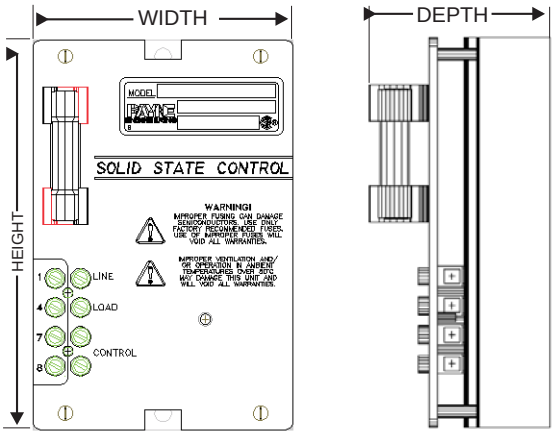

OPEN CHASSIS DIMENSION

All dimensions are approximate, and are not to be used for construction purposes. Payne Engineering Company Inc. reserves the right to make changes to product design, construction, and component parts in the interest of technical advancement without prior notification.

Artisan Technology Group - Quality Instrumentation ... Guaranteed | (888) 88-SOURCE | www.artisantg.com

Artisan Technology Group

Artisan Technology Group is your source for quality new and certified-used/pre-owned equipment

- FAST SHIPPING AND DELIVERY
- TENS OF THOUSANDS OF IN-STOCK ITEMS
- EQUIPMENT DEMOS
- HUNDREDS OF MANUFACTURERS SUPPORTED
- LEASING/MONTHLY RENTALS
- ITAR CERTIFIED SECURE ASSET SOLUTIONS

SERVICE CENTER REPAIRS
Experienced engineers and technicians on staff at our full-service, in-house repair center

InstraView℠ REMOTE INSPECTION
Remotely inspect equipment before purchasing with our interactive website at ***www.instraview.com*** ↗

WE BUY USED EQUIPMENT
Sell your excess, underutilized, and idle used equipment
We also offer credit for buy-backs and trade-ins
www.artisantg.com/WeBuyEquipment ↗

LOOKING FOR MORE INFORMATION?
Visit us on the web at ***www.artisantg.com*** ↗ for more information on price quotations, drivers, technical specifications, manuals, and documentation

Contact us: (888) 88-SOURCE | sales@artisantg.com | www.artisantg.com