Artisan Technology Group

Artisan Technology Group is your source for quality new and certified-used/pre-owned equipment

- FAST SHIPPING AND DELIVERY
- TENS OF THOUSANDS OF IN-STOCK ITEMS
- EQUIPMENT DEMOS
- HUNDREDS OF MANUFACTURERS SUPPORTED
- LEASING/MONTHLY RENTALS
- ITAR CERTIFIED SECURE ASSET SOLUTIONS

SERVICE CENTER REPAIRS
Experienced engineers and technicians on staff at our full-service, in-house repair center

InstraView℠ REMOTE INSPECTION
Remotely inspect equipment before purchasing with our interactive website at ***www.instraview.com*** ↗

WE BUY USED EQUIPMENT
Sell your excess, underutilized, and idle used equipment
We also offer credit for buy-backs and trade-ins
www.artisantg.com/WeBuyEquipment ↗

LOOKING FOR MORE INFORMATION?
Visit us on the web at ***www.artisantg.com*** ↗ for more information on price quotations, drivers, technical specifications, manuals, and documentation

Contact us: (888) 88-SOURCE | sales@artisantg.com | www.artisantg.com

Distributed Power System
SA500 AC Power Modules

615055-1R (14 Amp)
615055-1S (28 Amp)
615055-1T (35 Amp)
615055-1V (48 Amp)

Instruction Manual S-3018-1

Rockwell Automation

Artisan Technology Group - Quality Instrumentation ... Guaranteed | (888) 88-SOURCE | www.artisantg.com

Throughout this manual, the following notes are used to alert you to safety considerations:

ATTENTION: Identifies information about practices or circumstances that can lead to personal injury or death, property damage, or economic loss.

Important: Identifies information that is critical for successful application and understanding of the product.

The thick black bar shown on the left margin of this paragraph will be used throughout this manual to signify new or revised text or figures.

ATTENTION: Only qualified personnel familiar with the construction and operation of this equipment and the hazards involved should install, adjust, operate, or service this equipment. Read and understand this manual and other applicable manuals in their entirety before proceeding. Failure to observe this precaution could result in severe bodily injury or loss of life.

ATTENTION: Only qualified Rockwell personnel or other trained personnel who understand the potential hazards involved may make modifications to the rack configuration, variable configuration, and application tasks. Any modifications may result in uncontrolled machine operation. Failure to observe this precaution could result in damage to equipment and bodily injury.

ATTENTION: The user must provide an external, hardwired emergency stop circuit outside of the drive circuitry. This circuit must disable the system in case of improper operation. Uncontrolled machine operation may result if this procedure is not followed. Failure to observe this precaution could result in bodily injury.

ATTENTION: Registers and bits in the UDC module that are described as “read only” or for “system use only” must not be written to by the user. Writing to these registers and bits may result in improper system operation. Failure to observe this precaution could result in bodily injury.

ATTENTION: For brushless motor applications, changing any resolver wiring, breaking the resolver coupling, replacing the resolver, or replacing the motor and resolver for any reason requires that the shaft alignment test be performed again. Resolver wiring changes always affect shaft alignment. A resolver change and/or a new motor/resolver combination will affect the shaft alignment. Improper shaft alignment can cause motor overspeed when the motor is started. Failure to observe this precaution could result in bodily injury.

ATTENTION: The Power Module contains static-sensitive parts and assemblies. When not installed in the Power Module, components should be stored in anti-static bags. Failure to observe this precaution could result in damage to, or destruction of, the equipment.

ATTENTION: The user is responsible for conforming with all applicable local, national, and international codes. Failure to observe this precaution could result in damage to, or destruction of, the equipment.

The information in this user’s manual is subject to change without notice.

AutoMax™ is a trademark of Rockwell Automation.

©1998 Rockwell International Corporation

Artisan Technology Group - Quality Instrumentation ... Guaranteed | (888) 88-SOURCE | www.artisantg.com

CONTENTS

Chapter 1 **Introduction**
1.1 Distributed Power System (DPS) Overview 1-2
1.2 SA500 Drive Overview 1-3
1.3 Related Publications 1-4

Chapter 2 **Power Module Mechanical Description**
2.1 LED Indicators 2-3
2.2 Power Module Faceplate Connectors 2-6
2.2.1 Fiber-Optic Ports 2-7
2.2.2 Rail Ports 2-7
2.2.3 Resolver Feedback Connector 2-8
2.2.4 Drive I/O Connector 2-10

Chapter 3 **Power Module Electrical Description**
3.1 Power-Up Routine 3-1
3.2 DC-to-DC Converter 3-2
3.3 Resolver Interface 3-2

Chapter 4 **Installation Guidelines**
4.1 Wiring and Grounding 4-1
4.2 Power Module Installation 4-1
4.3 Fiber-Optic Connection 4-6
4.4 Drive I/O Connections 4-6
4.5 Rail Port Connection 4-8
4.6 Resolver Feedback Connection 4-8
4.6.1 Resolver Input Connections 4-10
4.6.1.1 Resolver Calibration 4-11
4.6.1.2 Resolver Alignment 4-12
4.6.1.3 Resolver Feedback Precautions 4-13
4.6.2 Analog Input 4-14
4.7 Constant Power Calibration 4-14
4.8 Power Module Replacement 4-17

Chapter 5 **Diagnostics and Troubleshooting**
5.1 Drive Faults (UDC Register 202/1202) 5-1
5.2 Power Module Warnings (UDC Register 203/1203) 5-3
5.3 Power Module Failure 5-4

Appendix A Technical Specifications A-1

Appendix B Brushless Industrial Motor Data and Curves B-1

Appendix C Custom DC Bus Supplies C-1

Appendix D UDC Register Cross-Reference D-1

Artisan Technology Group - Quality Instrumentation ... Guaranteed | (888) 88-SOURCE | www.artisantg.com

Appendix E Status of Data in the AutoMax Rack After a STOP_ALL Command or STOP_ALL Fault E-1

Appendix F PMI Regulator Block Diagram F-1

Appendix G Power Circuitry Block Diagram G-1

Appendix H Compliance with Electromagnetic Compatibility Standards H-1

Appendix I SA500 Power Module Output Current Overload Ratings I-1

Index Index-1

Artisan Technology Group - Quality Instrumentation ... Guaranteed | (888) 88-SOURCE | www.artisantg.com

List of Figures

Figure 1.1 – SA500 Drive Hardware Configuration 1-2

Figure 2.1 – SA500 Power Module With Cover and Without Cover 2-2
Figure 2.2 – Power Module External Connectors 2-6
Figure 2.3 – Location of Rail Fuse on PMI Regulator PC Board 2-8
Figure 2.4 – Resolver Feedback Connector Pinout 2-9
Figure 2.5 – Analog Input Circuit 2-10
Figure 2.6 – Drive I/O Connector Pinout 2-11
Figure 2.7 – Auxiliary Input Circuit 2-11
Figure 2.8 – Run Permissive Input (RPI) Circuit 2-12

Figure 3.1 – Resolver Data Format (12-Bit Mode) 3-2
Figure 3.2 – Resolver Data Format (14-Bit Mode) 3-3
Figure 3.3 – External Strobe Input Circuit 3-3
Figure 3.4 – External Strobe Input Circuit Timing Diagram 3-4

Figure 4.1 – Power Module Mounting Dimensions 4-3
Figure 4.2 – DC Bus Supply Wiring 4-5
Figure 4.3 – Terminal Block Connections for Drive I/O 4-7
Figure 4.4 – Terminal Block Connections for Resolver and Analog Input 4-9
Figure 4.5 – Typical Motor Operation in the Constant Torque and Constant Power Regions 4-15

Artisan Technology Group - Quality Instrumentation ... Guaranteed | (888) 88-SOURCE | www.artisantg.com

Artisan Technology Group - Quality Instrumentation ... Guaranteed | (888) 88-SOURCE | www.artisantg.com

List of Tables

Table 1.1 – SA500 Power Modules 1-1
Table 1.2 – SA500 Documentation (Binder S-3002) 1-4

Table 4.1 – Recommended Motor Wire Sizes 4-4
Table 4.2 – Rail I/O Instruction Manuals..... 4-8
Table 4.3 – Standard Resolver Connections 4-10
Table 4.4 – Recommended Resolver Cables 4-10
Table 4.5 – STATOR_IZ Tunable Values 4-16

Artisan Technology Group - Quality Instrumentation ... Guaranteed | (888) 88-SOURCE | www.artisantg.com

Artisan Technology Group - Quality Instrumentation ... Guaranteed | (888) 88-SOURCE | www.artisantg.com

CHAPTER 1

Introduction

The AutoMax Distributed Power System SA500 AC Power Modules provide AC power to, and control of, brushless motors and squirrel-cage induction motors from 1–15HP. Each Power Module contains the Power Module Interface (PMI) Regulator printed circuit board and the inverter used to convert DC power to AC power for the motor.

Depending upon their power requirements, up to six Power Modules can be daisy-chained together and operated from one SA500 DC Bus Supply, which provides the Power Modules a nominal 325 VDC input power. The DC Bus Supply is described in instruction manual S-3017.

The SA500 Power Modules are available in four sizes with a range of current ratings to complement the variety of motors available. See table 1.1 below.

Table 1.1 – SA500 Power Modules

Part Number	Continuous Current Rating (RMS)	Maximum Output Current (RMS) (0.5 seconds)[1]
615055-1R	14 A	17.5 A (125%)
615055-1S	28 A	35 A (125%)
615055-1T	35 A	70 A (200%)
615055-1V	48 A	106 A (220%)

1. Power Module output current overload rating charts are provided in Appendix I.

Power Module specifications are listed in Appendix A. Detailed speed-torque curves and engineering data for SA500 motors are included in Appendix B.

Figure 1.1 shows a typical SA500 drive configuration.

Artisan Technology Group - Quality Instrumentation ... Guaranteed | (888) 88-SOURCE | www.artisantg.com

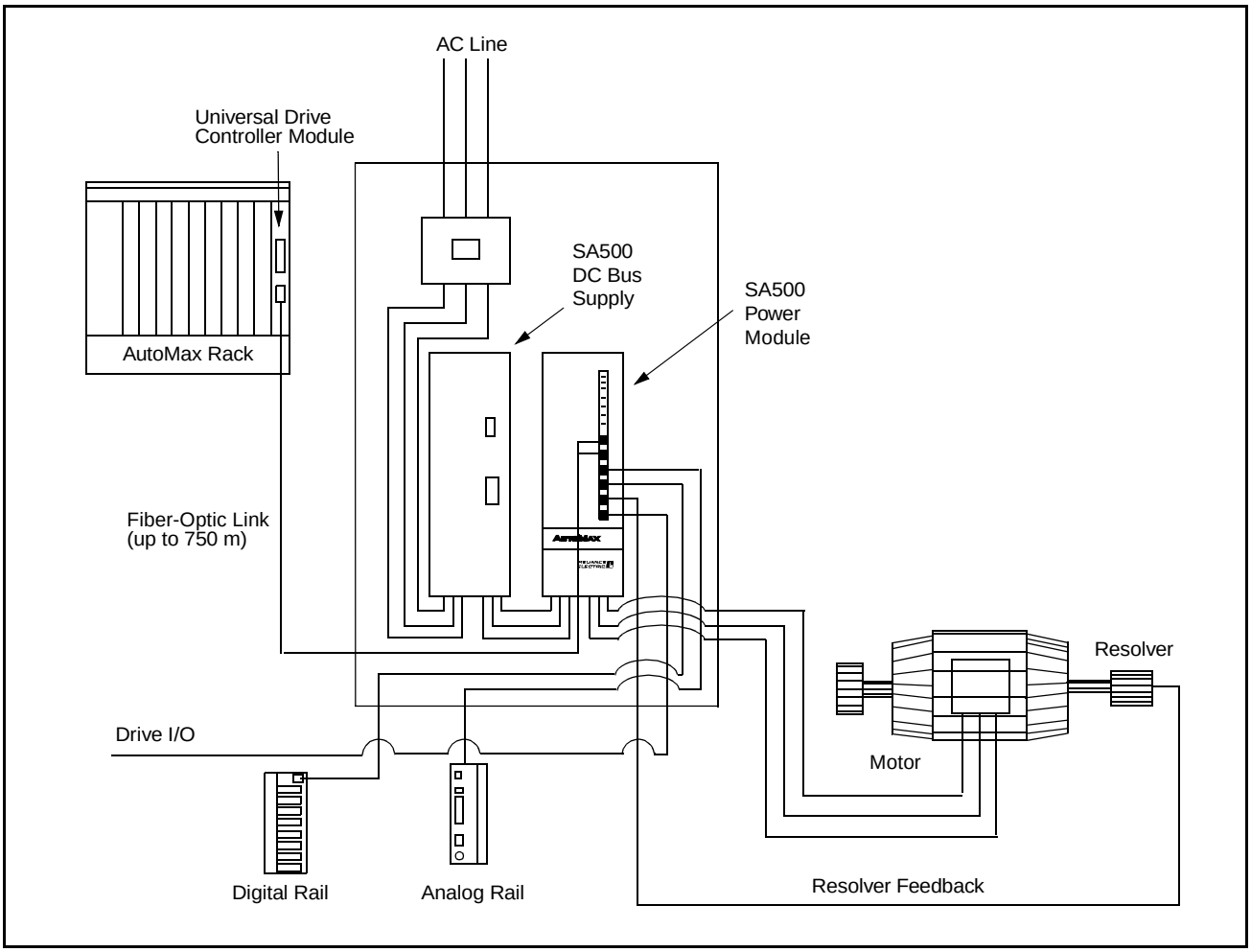

Figure 1.1 – SA500 Drive Hardware Configuration

1.1 Distributed Power System (DPS) Overview

The SA500 is a member of the AutoMax Distributed Power System (DPS) family of drives. DPS is a programmable microprocessor-based control system that is capable of real-time control of AC and DC drives. Each Universal Drive Controller (UDC) module (B/M O-57552) in the AutoMax rack allows the AutoMax Processor to control up to two drives (20 maximum from one rack). The UDC module communicates over a fiber-optic link with the PMI located in the SA500 Power Module. The Power Module can be located up to 750 meters (2500 feet) from the AutoMax rack.

Each DPS drive is controlled by an application task running in the UDC module. All programming and configuration of the SA500 drive is performed using the AutoMax Programming Executive software. The SA500 drive requires version 3.4 or later of the Programming Executive.

Artisan Technology Group - Quality Instrumentation ... Guaranteed | (888) 88-SOURCE | www.artisantg.com

1.2 SA500 Drive Overview

An SA500 drive consists of a DC Bus Supply and a Power Module which supplies three-phase AC power to an induction motor or a permanent magnet brushless motor.

The SA500 DC Bus Supply rectifies three-phase 230 VAC power to provide a constant DC voltage for the Power Module. A three-phase bridge consisting of three SCRs and three diodes controls the currents during charging of the DC bus capacitor. During charging, the phase angle of the SCR firing is shifted as a function of time to control the charging current.

The DC Bus Supply includes a braking circuit, consisting of a bi-polar transistor switch and a resistor. A DC-to-DC converter within the Power Module senses the DC bus voltage and switches the braking resistor across the DC bus if a preset threshold is exceeded. If the capacity of the internal braking resistor is exceeded, the drive's ability to dissipate energy may be increased by using an external braking resistor. See instruction manual S-3017 for more information.

Depending upon the power drawn by the individual Power Modules, the DC Bus Supply can support up to six Power Modules, each powering one motor. If more than six Power Modules need to be supplied by a common DC bus, if the capacity of the DC bus is exceeded, or if the capacity of the braking circuit is exceeded, a custom-designed DC bus supply may be used with the SA500 Power Modules. The custom DC bus may be regenerative or non-regenerative. Energy storage capacitors must be provided with the custom DC bus (or separately). See Appendix C for more information.

The SA500 Power Module consists of the PMI Regulator (commonly referred to as the PMI) and power circuitry to invert the DC bus voltage to three-phase 230 VAC for the motor. The power bridge consists of six bipolar transistors (three dual-transistor modules).

The PMI receives its operating system, all configuration data, and all commands including the torque reference from a UDC module in the AutoMax rack via fiber-optic cables. The PMI executes the torque control algorithm that controls the motor. The control type is determined by the operating system contained in the PMI. There are four types of control available: 1) vector, 2) brushless, 3) vector - speed loop enhanced, and 4) brushless - speed loop enhanced. The operating system is selected during UDC module configuration.

The UDC module executes the outer (major) control loops. The UDC task (task A or task B, depending upon the fiber-optic port to which the Power Module is connected) controls drive sequencing and the alignment of the resolver in brushless applications. The UDC task provides the torque reference to the PMI and communicates with other upper-level control tasks in the AutoMax rack.

The UDC module and the PMI are tightly synchronized through the fiber-optic link. The PMI sends all feedback signals, including warning and fault information, speed feedback, rail data, and gain data, to the UDC before each UDC task scan. Speed feedback sampling in the Power Module is synchronized to within 1 µsec of the UDC scan. The operating system in the PMI continuously performs diagnostic checks and displays the results on the Power Module faceplate LEDs.

The PMI also provides connections to digital and analog rails, as well as digital drive I/O. The PMI scans the rail and drive I/O while the regulation algorithm is running. This permits the I/O data to be integrated into the control algorithm as required.

Artisan Technology Group - Quality Instrumentation ... Guaranteed | (888) 88-SOURCE | www.artisantg.com

1.3 Related Publications

This instruction manual provides a description of the SA500 Power Module hardware. Installation guidelines are also provided. Note that this instruction manual does not describe specific applications of the standard hardware or software.

For more information, refer to the instruction manuals contained in the SA500 drive binder, S-3002, as listed in table 1.2. It is assumed that the user is familiar with these other manuals in S-3002 before installing, operating, or performing maintenance upon SA500 Power Modules. Refer to these instruction manuals as needed.

Table 1.2 – SA500 Documentation (Binder S-3002)

Document	Document Part Number
DPS Overview	S-3005
Universal Drive Controller Module	S-3007
Fiber Optic Cabling	S-3009
SA500 DC Bus Supply	S-3017
SA500 AC Power Modules	S-3018
SA500 Diagnostics, Troubleshooting, & Start-Up Guidelines	S-3022
SA500 Information Guide	S-3024
SA500 Drive Configuration & Programming	S-3044

Additional information about using SA500 Power Modules is found in the other instruction manuals, prints, and documents shipped with each drive system. Always consult the prints shipped with the drive system for specific mounting and connecting information about your drive.

Artisan Technology Group - Quality Instrumentation ... Guaranteed | (888) 88-SOURCE | www.artisantg.com

CHAPTER 2

Power Module Mechanical Description

Power Modules of all four ratings are the same size, consisting of a sheet metal enclosure, cooling fans, heatsink, a power supply PC board, inverter power devices, and the PMI Regulator PC board. A DC-to-DC converter supplies power to the PMI and to Hall-effect devices used for current feedback.

The faceplate of the Power Module has 15 LEDs, two rail I/O ports, fiber-optic transmit and receive ports, a resolver feedback connector for speed feedback and analog input signals, and a drive I/O connector for dedicated and general-purpose drive I/O. A push-button labeled “RE-BOOT” allows the PMI Regulator to be reinitialized. This allows ne Power Module to be reset without powering down the entire DC bus and all the Power Modules on it. When the button is pressed, all I/O is reset, the PMI executes its power-up routine, and then requests its operating system from the UDC module.

The SA500 Power Module is cooled by forced air. Air enters through the bottom of the module and exits through the top. The two fans at the bottom of the Power Module are internally connected and powered via a 24V supply produced by the DC-to-DC converter. The PMI monitors the temperature of the Power Module heatsink and reports an overtemperature condition in register 202/1202, bit 0.

Two quarter-turn fasteners on the faceplate allow removal of the Power Module cover. Mounting holes are provided on flanges that extend above and below the module. Module dimensions are listed in Appendix A. See figure 2.1 for views of the module with and without its cover.

Note that motor-mounted resolvers are required for speed and position feedback on SA500 drives. Resolvers are included with every SA500 brushless and induction motor.

Artisan Technology Group - Quality Instrumentation ... Guaranteed | (888) 88-SOURCE | www.artisantg.com

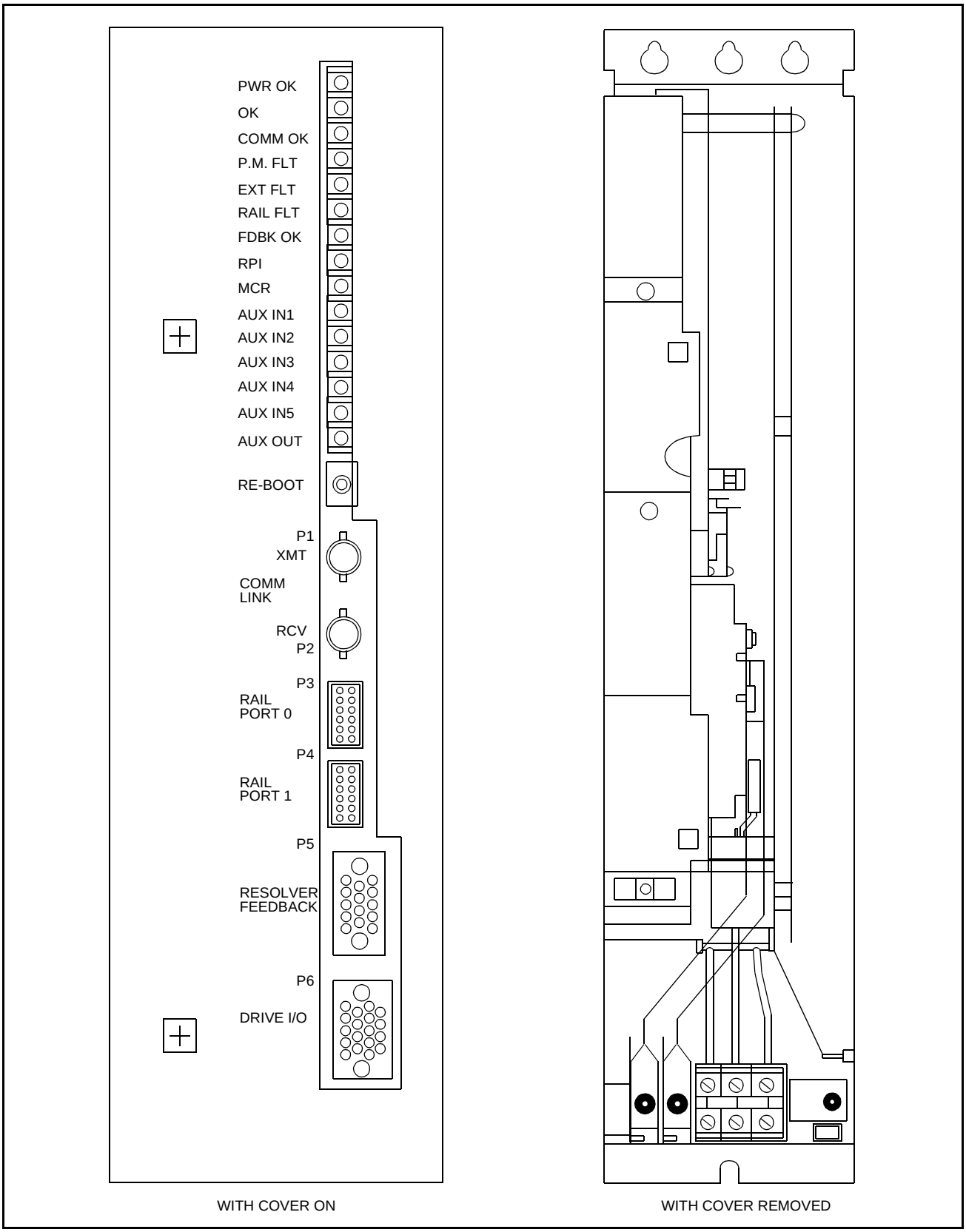

Figure 2.1 – SA500 Power Module With Cover and Without Cover

Artisan Technology Group - Quality Instrumentation ... Guaranteed | (888) 88-SOURCE | www.artisantg.com

2.1 LED Indicators

The LEDs on the faceplate of the Power Module indicate the status of the PMI, inverter, fiber-optic link, rail I/O, resolver feedback signal, and drive I/O. The status of the LEDs is also reported in the UDC module's dual port memory. See the SA500 Drive Configuration and Programming instruction manual (S-3044) for a complete description of the following status bits. Note that all faults indicated by the LEDs (except for the RAIL FLT LED) will result in the PMI disabling the power device gates, which will cause the motor to coast to a stop.

The LED indicators on the module faceplate are defined as follows:

PWR OK (green) - The "PWR OK" LED indicates that all power supply voltages for the PMI are at acceptable operating levels. The status of the DC-to-DC converter is available in the UDC module's dual port memory (register 202/1202, bit 12). This LED also indicates that the DC bus is powered up.

OK (green) - When power is applied to the Power Module, the LED will turn on to indicate the PMI has passed its internal power-up diagnostics. After power-up, this LED will turn off if the internal watchdog times out. This will cause the drive to disable the gate drive circuitry in the inverter.

COMM OK (green) - When lit, this LED indicates messages are being received correctly over the fiber-optic link from the UDC module. If this LED is off, it indicates there is a fault in the link or that the UDC module is unable to communicate.

If the PMI does not receive a message from the UDC module for two or more CCLK periods, or logs two consecutive communication errors of any type, the PMI processor will shut the drive down.

Detailed information about the communication link (e.g., number of messages sent and received, CRC error count) is displayed in the UDC/PMI Communication Status Registers (80-89/1080-1089) on the UDC module.

P.M. FLT (red) - When lit, this LED indicates that one of the fault conditions listed below has been detected in the Power Module:

- Overtemperature

  Corresponding UDC location: Register 202/1202, bit 0

- DC bus overvoltage

  Corresponding UDC location: Register 202/1202, bit 2

- Vcc (+5V) supply undervoltage

  Corresponding UDC location: Register 202/1202, bit 3

Artisan Technology Group - Quality Instrumentation ... Guaranteed | (888) 88-SOURCE | www.artisantg.com

EXT FLT (red) - When lit, this LED indicates that one of the following external fault conditions has occurred:

- Overcurrent fault

  Corresponding UDC location: Register 202/1202, bit 1

- User-programmed fault

  Corresponding UDC location: Register 101/1101, bit 2

- Overspeed fault

  Corresponding UDC location: Register 202/1202, bit 10

RAIL FLT (red) - When lit, this LED indicates communication between an I/O rail and the PMI has been disrupted, or that a rail has been configured but is not plugged in.

Registers 0-23 are available in the UDC module for rail variable configuration and diagnostic purposes. If a rail communication problem is detected and logged in register 4, 10, 16, or 22, then bit 13 in the Drive Warnings register (203/1203) will be set.

Note that rail faults will not cause the drive to shut down. The user must ensure that the application task tests the rail fault registers and forces appropriate action in the event of a fault.

FDBK OK (green) - When lit, this LED indicates that the Resolver & Drive I/O module is receiving feedback from the resolver and that no resolver feedback faults have been detected.

If the LED is off, it indicates the following fault:

- Feedback broken wire fault. The resolver sine and/or cosine signals are missing, or the resolver gain tunable (RES_GAN%) has been set too low.

Corresponding bit location: Register 202/1202, bit 8

The signals associated with the following LEDs interface to the Power Module via the Drive I/O connector. See figure 2.6.

RPI (green) - When lit, this LED indicates that the run permissive input (RPI) signal is detected on pin A. The RPI signal typically originates from the drive's coast-to-rest stop circuit.

Corresponding bit location: Register 201/1201, bit 0.

MCR (amber) - When lit, this LED indicates the MCR (motor control relay) output signal is being driven on (pin P). The MCR output is under the control of the PMI. This LED will turn on when the drive is put into run and will turn off when the drive is idle. The use of a motor control relay is optional.

Artisan Technology Group - Quality Instrumentation ... Guaranteed | (888) 88-SOURCE | www.artisantg.com

AUX IN1 (green) - When lit, this LED indicates the presence of a 115 volt signal on this input (pin C). This LED is used for M-contactor feedback when the programmer has configured an output contactor between the Power Module and the motor. The use of an M-contactor is optional.

Corresponding bit location: Register 201/1201, bit 1.

AUX IN2 (green) - When lit, this LED indicates the presence of a 115 volt signal on this input (pin E).

Corresponding bit location: Register 201/1201, bit 2.

AUX IN3 (green) - When lit, this LED indicates the presence of a 115 volt signal on this input (pin H).

Corresponding bit location: Register 201/1201, bit 3.

AUX IN4 (green) - When lit, this LED indicates the presence of a 115 volt signal on this input (pin K).

Corresponding bit location: Register 201/1201, bit 4.

AUX IN5 (green) - When lit, this LED indicates the presence of a 115 volt signal on this input (pin M).

Corresponding bit location: Register 201/1201, bit 5.

AUX OUT (amber) - When lit, this LED indicates the output signal has been turned on (pin S).

Corresponding bit location: Register 101/1101, bit 4.

Artisan Technology Group - Quality Instrumentation ... Guaranteed | (888) 88-SOURCE | www.artisantg.com

2.2 Power Module Faceplate Connectors

The following sections describe the Power Module faceplate connectors. Figure 2.2 shows the external connections to the Power Module.

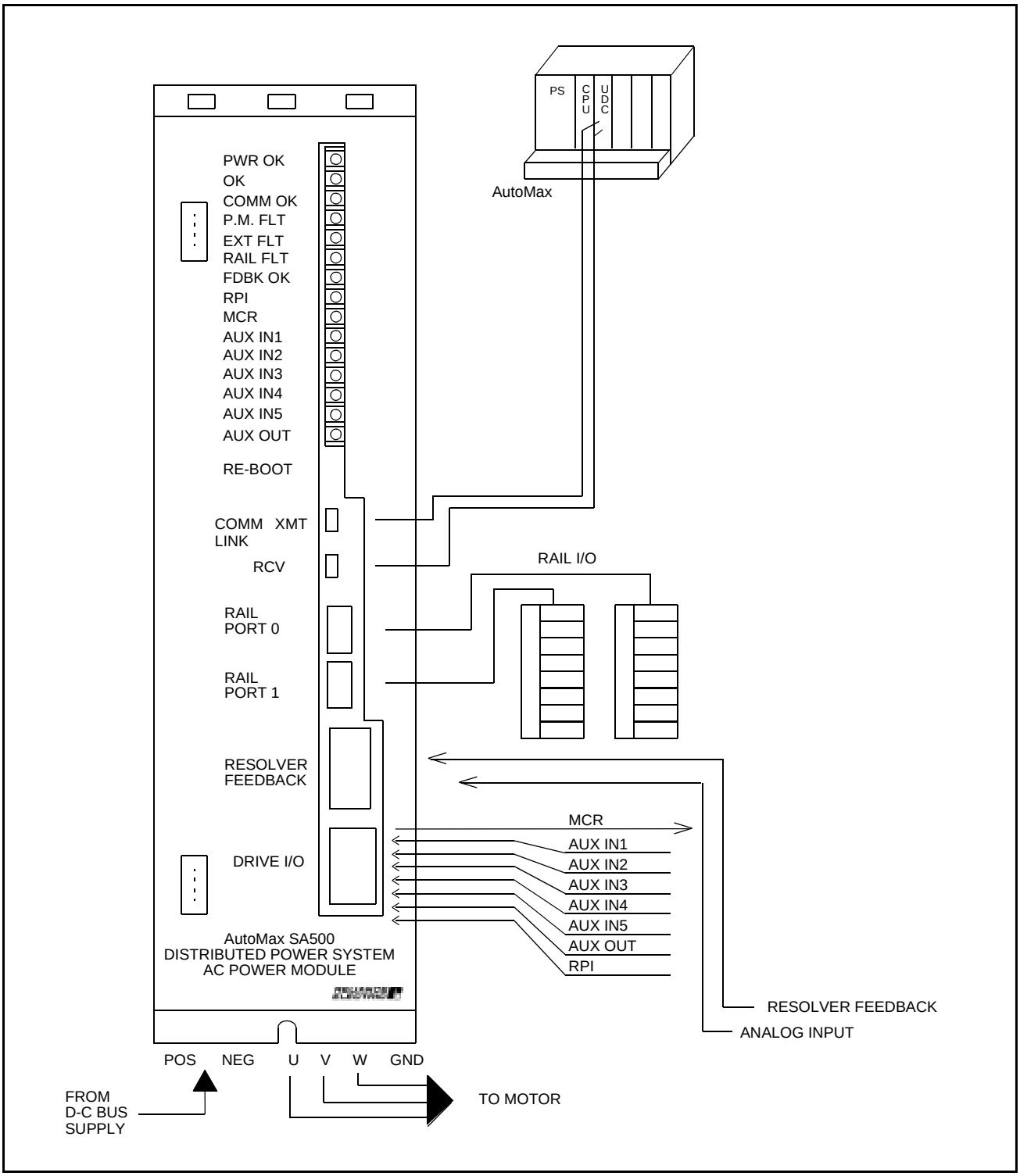

Figure 2.2 – Power Module External Connectors

Artisan Technology Group - Quality Instrumentation ... Guaranteed | (888) 88-SOURCE | www.artisantg.com

2.2.1 Fiber-Optic Ports

Transmit (XTM) and receive (RCV) ports are provided on the faceplate of the Power Module for connection to the fiber-optic link with the UDC module in the AutoMax rack. The Power Module is shipped with dust caps covering the fiber-optic ports. To prevent dust accumulation and the resulting loss of signal integrity, the dust caps should not be removed until the fiber-optic cables are installed, and should be replaced if the cables are disconnected.

ATTENTION: Turn off, lock out, and tag power to both the rack containing the UDC module and to its corresponding PMI Regulator before viewing the fiber-optic cable or transmitter under magnification. Viewing a powered fiber-optic transmitter or connected cable under magnification may result in damage to the eye. For additional information refer to ANSI publication Z136.1-1981. Failure to observe this precaution could result in bodily injury.

2.2.2 Rail Ports

Two rail ports (0 and 1) on the faceplate of the Power Module support direct connection to digital and analog rail modules. All combinations of the modules listed below are supported.

- M/N 45C001A Digital I/O Rail (J-3012)
- M/N 45C630 4-Decade Thumbwheel Switch Input Module (J-3654)
- M/N 45C631 4-Digit LED Output Module (J-3655)
- M/N 61C345 4-Channel Analog Current Input Rail (J-3689)
- M/N 61C346 4-Channel Analog Voltage Input Rail (J-3688)
- M/N 61C350 2-Channel Analog Voltage Input/Output Rail (J-3672)
- M/N 61C351 2-Channel Analog Current Input/Output Rail (J-3673)
- M/N 61C365 4-Channel Analog Current Output Rail (J-3694)
- M/N 61C366 4-Channel Analog Voltage Output Rail (J-3695)

Digital I/O modules can be mixed in an I/O rail connected to the Power Module. Analog rail modules must be used in the rail mode only. Note that Local Heads (M/N 61C22) are not supported.

These rails receive the 5V power required for their operation through their connection to the PMI. If the PMI is reset or power is removed, all outputs are turned off. Rail cables must not be connected or disconnected under power.

The PMI contains the fusing for the rail I/O. The Power Module cover must be removed to replace the rail fuse. See figure 2.3 for the location of the rail fuse. See Appendix A for the rail fuse specification.

The rail update rate is asynchronous to the UDC task and UDC-to-PMI communications. While the regulation algorithm is running, digital rails are updated every 5 msec (both ports). Analog rails are updated every 20 msec (both ports).

Artisan Technology Group - Quality Instrumentation ... Guaranteed | (888) 88-SOURCE | www.artisantg.com

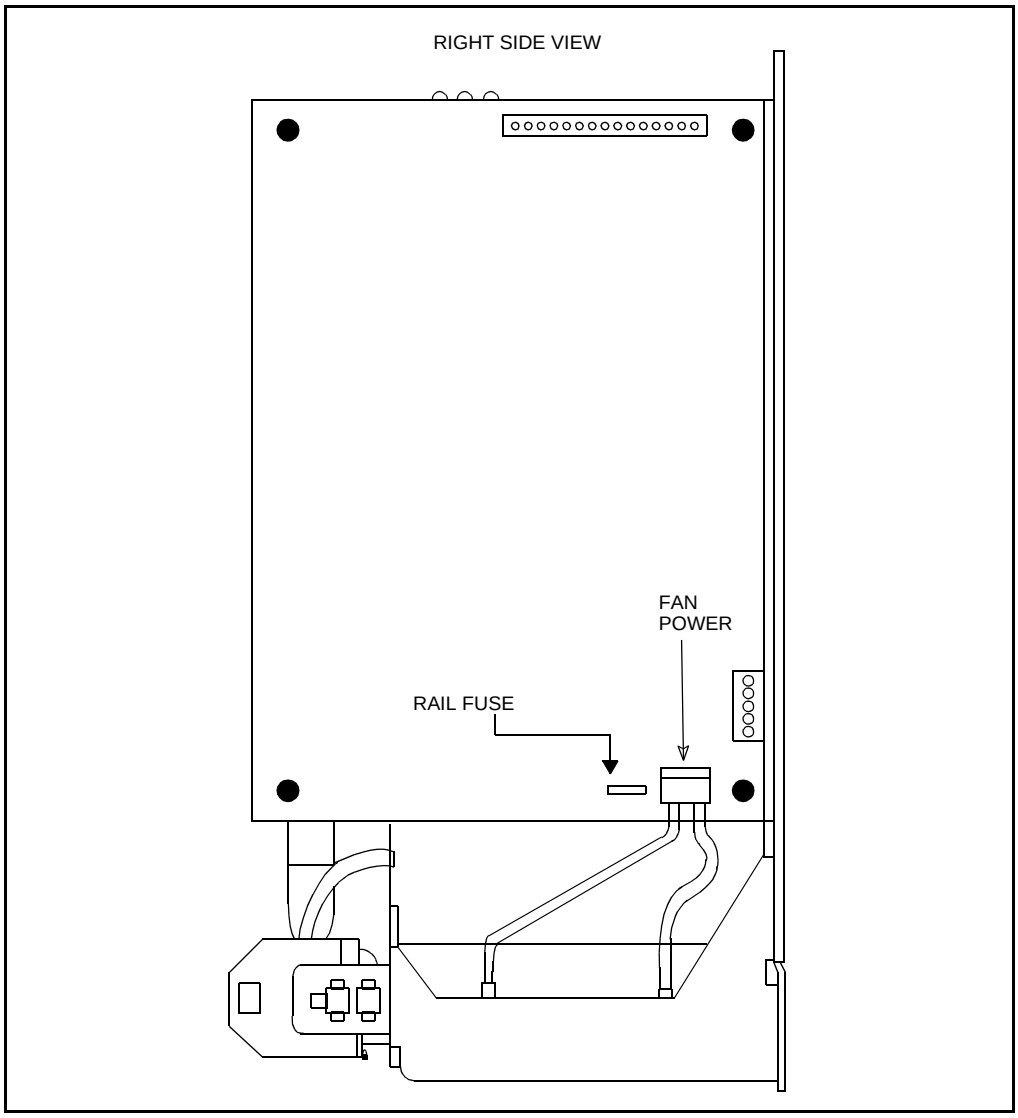

Figure 2.3 – Location of Rail Fuse on PMI Regulator PC Board

2.2.3 Resolver Feedback Connector

The faceplate connector labeled “RESOLVER FEEDBACK” is used to connect the resolver to the Power Module. This connector will also accept a signal from an analog tachometer or other analog field device as long as the signal is within the correct voltage range. (Note that the tachometer cannot be used for speed feedback.) A 24V digital input that serves as a strobe for latching the resolver position externally is also supplied.

Both a resolver and an analog device may be connected to the module (e.g., the analog input may be used for tension or position feedback at the same time that the resolver input is used for speed feedback). However, only the resolver will be monitored for an overspeed condition. See the SA500 Drive Configuration and Programming instruction manual, S-3044, for more information.

Artisan Technology Group - Quality Instrumentation ... Guaranteed | (888) 88-SOURCE | www.artisantg.com

ATTENTION: For brushless motor applications, changing any resolver wiring, breaking the resolver coupling, replacing the resolver, or replacing the motor and resolver for any reason requires that the shaft alignment test be performed again. Resolver wiring changes always affect shaft alignment. A resolver change and/or a new motor/resolver combination will affect the shaft alignment. Improper shaft alignment can cause motor overspeed when the motor is started. Failure to observe this precaution could result in bodily injury.

The Resolver Feedback connector pinout is shown in figure 2.4.

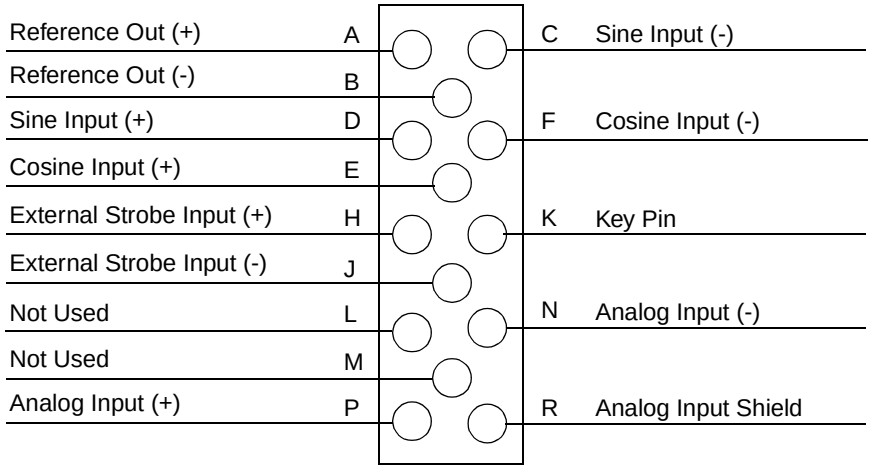

Figure 2.4 – Resolver Feedback Connector Pinout

The analog input operates over the range of +/-10V differential (+/-30V common mode). It is the user's responsibility to ensure that the input signal is scaled to conform to this range. The input is bandwidth-limited to 320 Hz. The resolution of the input is 12 bits (11 bits plus sign) or 4.88 mV per bit. The input impedance is 1.3 megohms and is resistively isolated. The analog input circuit is shown in figure 2.5.

If an analog tachometer is not used, the input may be used for other purposes as long as the signal is within the correct voltage range. The PMI sends the analog input data to the UDC module immediately before it is needed by the UDC module for the next UDC task scan. The analog input data is stored in UDC register 214/1214. The value may range from -2048 (-10 volts) to +2047 (+10 volts).

Artisan Technology Group - Quality Instrumentation ... Guaranteed | (888) 88-SOURCE | www.artisantg.com

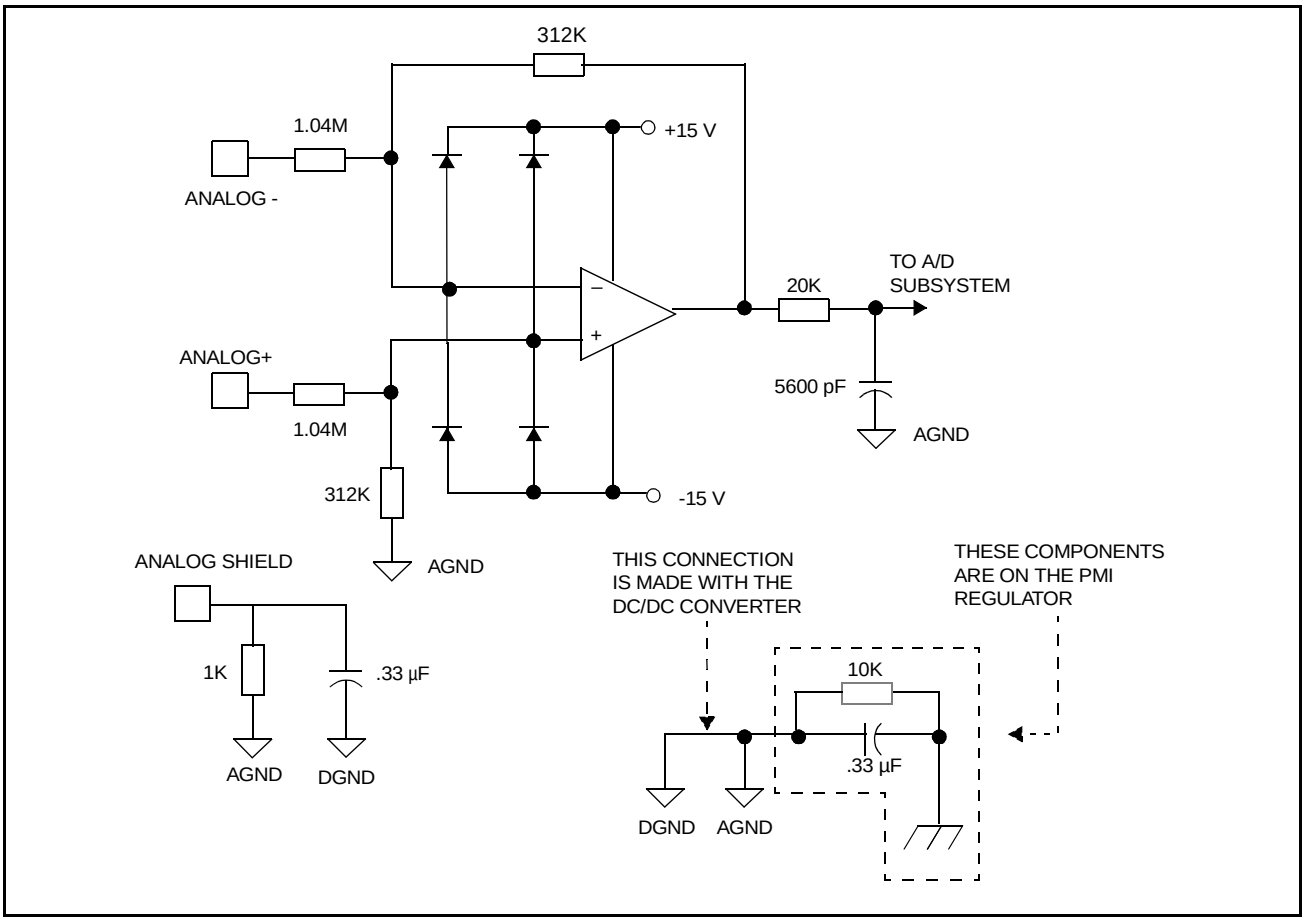

Figure 2.5 – Analog Input Circuit

2.2.4 Drive I/O Connector

The connector labeled “DRIVE I/O” is used for digital I/O connections to standard drive-related signals, such as M-contactor status, the run permissive input (RPI) for the drive, or for other user-designated functions. Six digital inputs and two digital outputs are provided. Five of the inputs (AUX IN1 to AUX IN5) and one of the outputs are user-programmable.

The digital drive I/O operates with 115VAC (50/60Hz) nominal line voltage. All input and output channels have isolated commons with an isolated voltage rating limited to 150VAC. All inputs and outputs have isolation voltage ratings of 1500 volts between the I/O and the PMI Regulator's power supply. See figures through for the input and output circuit diagrams.

The RPI input and the MCR output are interlocked in hardware on the module. The MCR output is activated only when the RPI signal is asserted (by the user) and the MCR output is being commanded on by the PMI. The PMI will begin the process to turn off the MCR output when any of the following conditions occurs:

- The RPI input signal is removed
- A drive fault occurs
- The torque control algorithm is turned off (TRQ_RUN = 0)

Artisan Technology Group - Quality Instrumentation ... Guaranteed | (888) 88-SOURCE | www.artisantg.com

If any of these events occurs, the PMI will wait for 100 msec and then turn off the MCR output. If the RPI signal is removed, the MCR output will be turned off and gate power will be removed under hardware control within approximately 0.5 second to provide an additional level of protection.

The user has the option of having an M-contactor (i.e., an output contactor) on the output of the Power Module. This option is available during UDC parameter configuration. The M-contactor is controlled by the MCR output, which is under the control of the PMI processor. If the choice is made to connect the MCR to the output contactor, the contacts must be wired to the AUX IN1/MFDBK input. The PMI will then wait for this signal to turn on before executing the control algorithm. The status of the AUX IN1/ MFDBK input is reported in register 201/1201, bit 1. If this configuration choice is not made, the AUX IN1 input can be used for any user-designated purpose.

The status of the drive I/O is indicated in UDC register 201/1201 and by eight LEDs on the module faceplate. In the event of a power loss or if a system reset command is initiated by the PMI, all outputs are turned off.

The Drive I/O connector pinout is shown in figure 2.6.

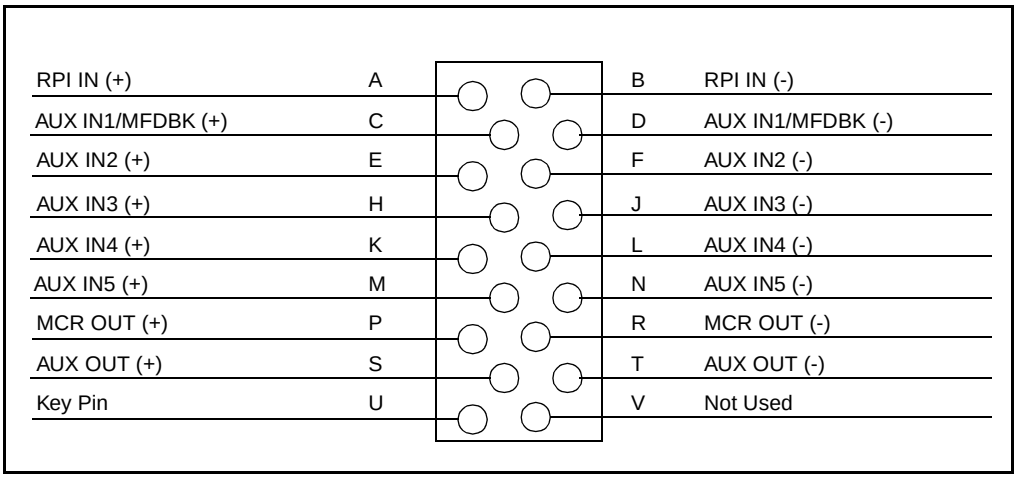

Figure 2.6 – Drive I/O Connector Pinout

Figure 2.7 shows the auxiliary input interface circuit.

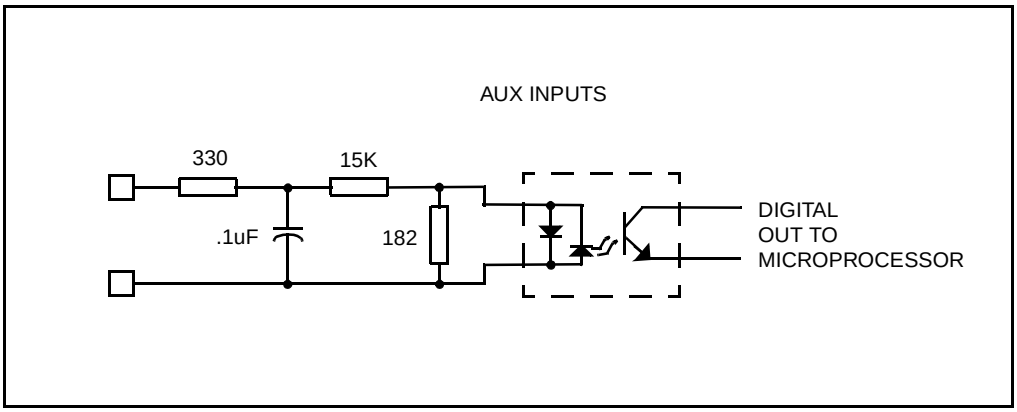

Figure 2.7 – Auxiliary Input Circuit

The run permissive input (RPI) circuit is shown in figure 2.8.

Artisan Technology Group - Quality Instrumentation ... Guaranteed | (888) 88-SOURCE | www.artisantg.com

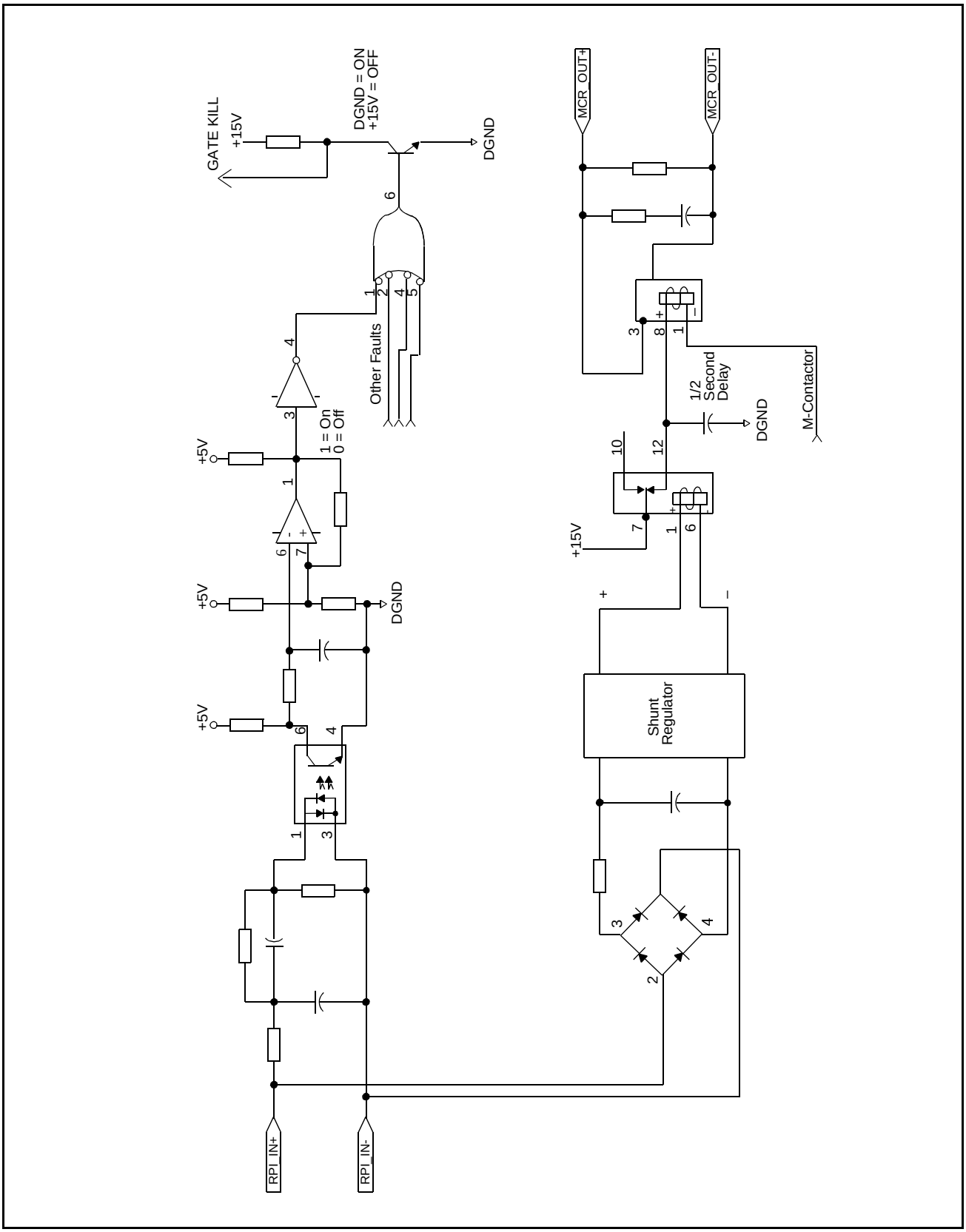

Figure 2.8 – Run Permissive Input (RPI) Circuit

Artisan Technology Group - Quality Instrumentation ... Guaranteed | (888) 88-SOURCE | www.artisantg.com

CHAPTER 3

Power Module Electrical Description

DC input voltage to the Power Module is supplied by a DC bus, normally the SA500 DC Bus Supply. The inverter bridge in the Power Module converts the constant potential DC voltage from the DC bus to three-phase AC power for the motor. The inverter bridge consists of six bi-polar transistors. Interlock circuitry ensures that the upper phase and lower phase U, V, and W transistors are never turned on at the same time.

The inverter bridge can regenerate energy to the DC bus. During regeneration, the inverter returns energy from the motor to the DC bus. However, the SA500 DC Bus Supply cannot pass this regenerative current back to the AC line. Instead, it stores the excess energy in its capacitors. It can then pass this surplus energy to other Power Modules on the bus that need motoring current, or it can dissipate the energy through DC bus braking resistors. See the DC Bus Supply instruction manual (S-3017) for specifications on the regeneration limits of the DC Bus Supply and for more information about braking resistors.

The regulator circuitry and UDC communication interface is contained on a single PC board, the Power Module Interface (PMI) Regulator. This PC board contains control circuitry for the inverter, resolver and drive I/O circuitry, and fiber-optic transceivers for communication with the UDC module in the AutoMax rack. The PMI's main function is torque regulation for brushless motors and induction motors.

The PMI contains a RISC (reduced instruction set computer) microprocessor operating at 16 MHz. High speed communication with the UDC module is controlled by an onboard serial communications controller. Data is transmitted over the fiber-optic link at 10 Mbit/sec using the High-Level Data Link Control (HDLC) protocol. Data integrity is checked using a CRC (cyclic redundancy check) error detection scheme.

The PMI contains an on-board watchdog timer that is enabled when power is applied to the PMI. Once activated, the on-board CPU must continually reset the watchdog timer within a specified time or the PMI will shut down. The MCR output, typically used to control a motor contactor, will be turned off under hardware control within 0.5 seconds if the watchdog times out. (The MCR output is also turned off if the RPI input turns off.) To reset the watchdog, you must either cycle power or press the RE-BOOT button on the faceplate.

Any faults in the Power Module will cause the PMI to turn off the control signals to the power devices (bipolar transistors) that switch the DC bus voltage to the motor.

3.1 Power-Up Routine

When power is applied to the Power Module, the LEDs will blink three times as a test and the PMI will perform a series of internal diagnostics. The P.M. FLT LED on the faceplate will flash if the Power Module fails any of these diagnostics. If the diagnostics are passed, the OK LED on the faceplate will turn on.

Artisan Technology Group - Quality Instrumentation ... Guaranteed | (888) 88-SOURCE | www.artisantg.com

The PMI will automatically request its operating system from the UDC module as soon as communications are established over the fiber-optic link. After the operating system has been downloaded from the UDC module (a process that takes approximately 0.5 seconds), the PMI Regulator will send a feedback message. The UDC module will respond with a command message and configuration data. The information sent contains configuration data as well as the synchronization information necessary for the PMI to determine when to send feedback messages to the UDC module once UDC application tasks are put into run.

The PMI uses non-volatile EPROM memory to store the initial start-up software and power-up diagnostics and to establish communication with the UDC module. After power-up, the module stores data in and operates out of volatile SRAM. If power is removed from the Power Module, all data and the module's operating system will be lost. When power is returned to the Power Module, the PMI module will begin its normal power-up routine.

3.2 DC-to-DC Converter

A DC-to-DC converter in the Power Module provides the DC voltages necessary for the operation of the PMI. The converter is connected to DC input power internally when the Power Module is connected to the DC Bus Supply.

The PMI monitors the +5V and the +/-15V supplied via the converter. When these voltages are above specified levels, the PMI will turn on the PWR OK LED. If the +5V line falls below a pre-determined level, the PMI turns off power to the gate drivers under hardware control, and the motor coasts to a stop.

3.3 Resolver Interface

The resolver interface converts analog sine and cosine resolver feedback signals into digital format. A tracking ratiometric resolver-to-digital (R/D) converter outputs a 12- or 14-bit digital number indicating the absolute electrical position of the resolver shaft. The resolution (12 or 14 bit) of the R/D converter is selected during drive parameter entry. A two-bit revolution counter extends operation over four electrical revolutions. The counter is reset whenever power is turned on to the system or a system reset command is asserted by the PMI. When 12-bit mode is selected, the resolver data format will be as shown in figure 3.1. Figure 3.2 shows the resolver data format when 14-bit mode is selected.

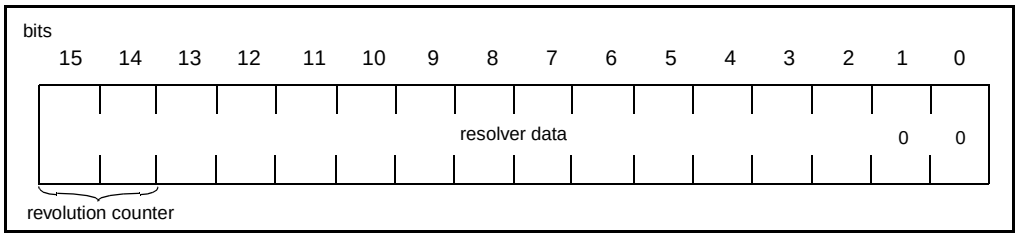

Figure 3.1 – Resolver Data Format (12-Bit Mode)

Artisan Technology Group - Quality Instrumentation ... Guaranteed | (888) 88-SOURCE | www.artisantg.com

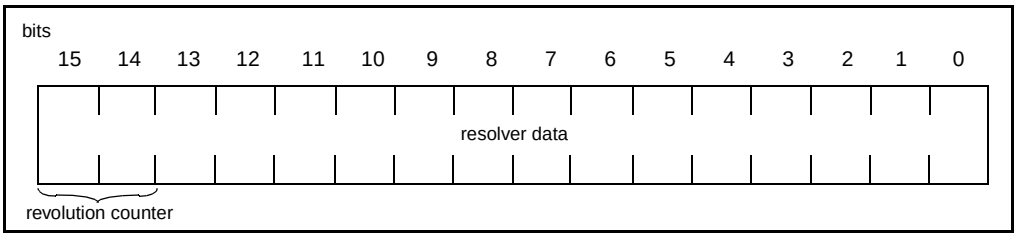

Figure 3.2 – Resolver Data Format (14-Bit Mode)

The PMI produces a nominal 26 volt rms 2381 Hertz sine wave reference output signal which is capable of driving a 500 ohm load. The stator signals (sine and cosine) are input through a matched isolation transformer pair. The transformers are matched for gain and phase shift. The ratio of the sine and cosine amplitudes is then converted to an angular position. Position data is sent to the UDC module by the PMI before every scan of the UDC task. The UDC task calculates speed using this position data.

The PMI supports two methods of sampling the digital position of the resolver, time-driven and event-driven. Both methods may be used simultaneously. In the first method, the position is sampled once per UDC task scan at the rate defined in the SCAN_LOOP control block in the UDC task. This block tells the UDC task how often to run based on the CCLK signal on the AutoMax rack backplane. The PMI sends the position data to the UDC module immediately before it is needed by the UDC module for the next UDC task scan. Position data measured using this method is stored in the UDC module's dual port register 215/1215 in the format shown in figure 3.1 or 3.2.

The second method allows position sampling between scans or when an external event occurs by using an external strobe. The resolver interface includes an isolated 24 volt DC input with a relatively high degree of filtering (approximately 800 Hz). The external strobe input circuit is shown in figure 3.3.

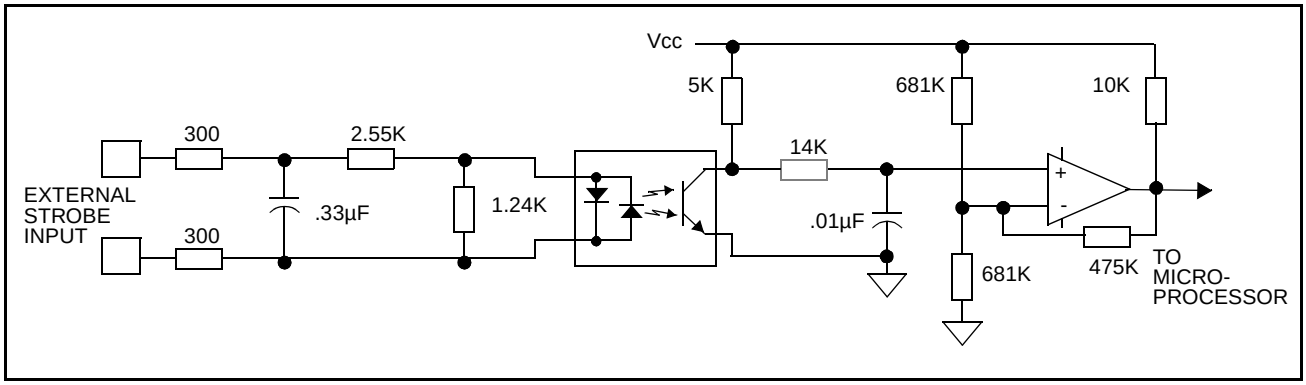

Figure 3.3 – External Strobe Input Circuit

Figure 3.4 shows the relationship between the time the external strobe is detected and the point at which the resolver position is sampled. Response time is subject to temperature, component tolerance, and input voltage level. Note that the input signal pulse width should be greater than 300 µsec and the frequency should be less than 1000 pulses per second.

Artisan Technology Group - Quality Instrumentation ... Guaranteed | (888) 88-SOURCE | www.artisantg.com

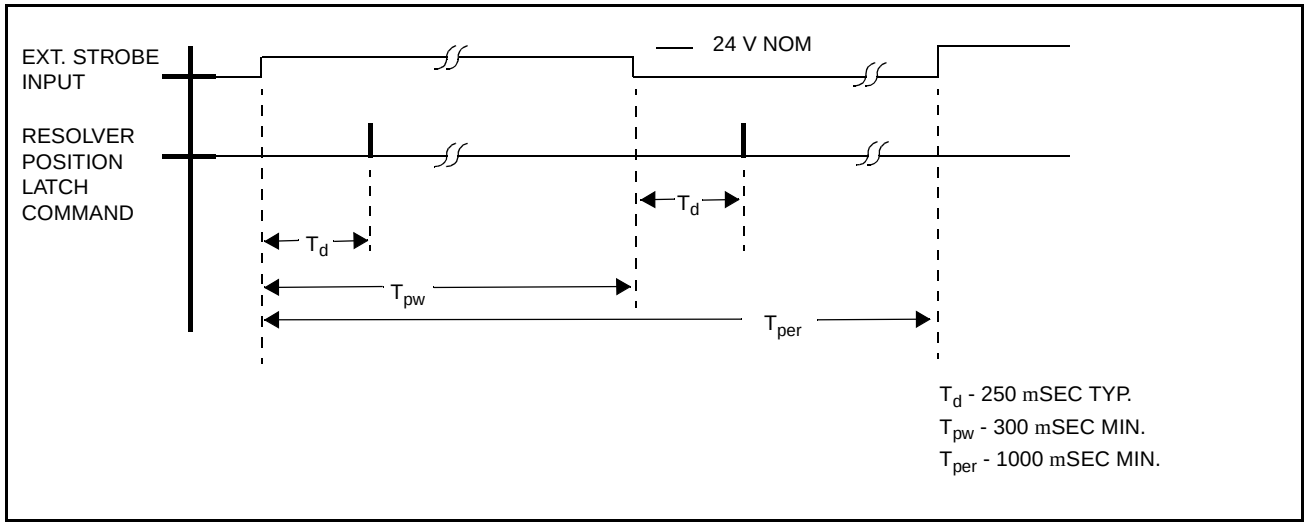

Figure 3.4 – External Strobe Input Circuit Timing Diagram

Strobe input detection is enabled by setting bits 8 and/or 9 in UDC register 101/1101. The resolver position can be sampled on the strobe input's rising edge, falling edge, or both. Latched data is sent to the UDC module immediately before it is needed by the UDC module for the next UDC task scan. Note that the PMI operating system detects only one edge per UDC scan. If the programmer chooses to have the resolver position sampled on both edges of the strobe's input, the leading edge will be detected in one scan and the falling edge in the next scan.

Position data measured using this method is placed in UDC register 216/1216 in the format shown in either figure 3.1 or 3.2. Bit 8 of UDC register 201/1201 is set to indicate that the strobe signal has been detected. This bit is set for only one scan to allow a strobe to be detected every scan. The UDC task must check this bit each scan to ensure the validity of the strobe data in register 216/1216. Bit 9 of register 201/1201 is set or cleared when the external strobe is detected and indicates whether the strobe level was rising (1) or falling (0).

Artisan Technology Group - Quality Instrumentation ... Guaranteed | (888) 88-SOURCE | www.artisantg.com

CHAPTER 4
Installation Guidelines

ATTENTION: Only qualified personnel familiar with the construction and operation of this equipment and the hazards involved should install, adjust, operate, or service this equipment. Read and understand this manual and other applicable manuals in their entirety before proceeding. Failure to observe this precaution could result in severe bodily injury or loss of life.

ATTENTION: DC bus capacitors retain hazardous voltages after input power has been disconnected. After disconnecting input power from the DC bus supply, wait five (5) minutes and then measure the voltage at the POS and NEG terminals of the DC bus supply and each Power Module to ensure the DC bus capacitors are discharged before touching any internal components. Failure to observe this precaution could result in severe bodily injury or loss of life.

ATTENTION: The user is responsible for conforming with all applicable local, national, and international codes. Failure to observe this precaution could result in damage to, or destruction of, the equipment.

This chapter describes how to install the Power Module and connect it to the UDC, the rail I/O, the drive I/O, and the resolver.

For connection instructions specific to your system, refer to the detailed prints included in the instruction book shipped with each engineered drive system.

4.1 Wiring and Grounding

To reduce the possibility of electrical noise interfering with the proper operation of the drive system, exercise care when installing the wiring between the system and external devices. For detailed recommendations, refer to IEEE 518.

The grounding stud (GND) on the Power Module must be connected to the grounding stud on the DC Bus Supply, as shown in figure 4.2. The DC Bus Supply must be connected to earth ground (PE) and checked with an ohmmeter before power is applied.

4.2 Power Module Installation

The following procedure is intended to be only a guide to assist you in installing the Power Module. Refer to the wiring diagrams supplied with your system for more specific information. Note that there are no user-adjustable potentiometers or jumpers on the Power Module.

Before installation, ensure that ambient air around the Power Module is clean, dry, and free of flammable or combustible vapors, chemical fumes, oil vapor, steam, and excessive moisture and dirt.

Artisan Technology Group - Quality Instrumentation ... Guaranteed | (888) 88-SOURCE | www.artisantg.com

Step 1. Mount the Power Module. Power Modules are designed to be mounted vertically on a flat surface using M5 or #10 screws. The holes in the top flanges are key-hole shaped and the lower hole is U-shaped to facilitate mounting.

The Power Module should be mounted in a location with good air flow and must be in close proximity to the DC Bus Supply. Power Modules should not be mounted one over another because the exhaust air from the lower Power Module would feed the air intake of the upper Power Module. The minimum distance above and below the Power Module is 85 mm (3.4 inches). Allow 13 mm (0.5 inch) between any Power Module and the side wall of an enclosure. Allow 3 mm (0.125 inch) between individual Power Modules. See figure 4.1.

When multiple Power Modules are being installed, the Power Modules with the highest current rating should be placed closest to the DC Bus Supply. Note that the Power Modules should be evenly distributed on each side of the DC Bus Supply. If two Power Modules are being used, one should be mounted to the left of the Bus Supply and one should be mounted to the right. If four Power Modules are being used, two should be wired from the left of the Bus Supply and two from the right. If an odd number of Power Modules is being used, the Power Modules should be distributed as evenly as possible on each side of the Bus Supply. This method of Power Module placement minimizes wire length, which reduces wire inductance.

See the DC Bus Supply instruction manual (S-3017) for information on how to calculate the maximum number of Power Modules that can be sourced from one DC Bus Supply.

Artisan Technology Group - Quality Instrumentation ... Guaranteed | (888) 88-SOURCE | www.artisantg.com

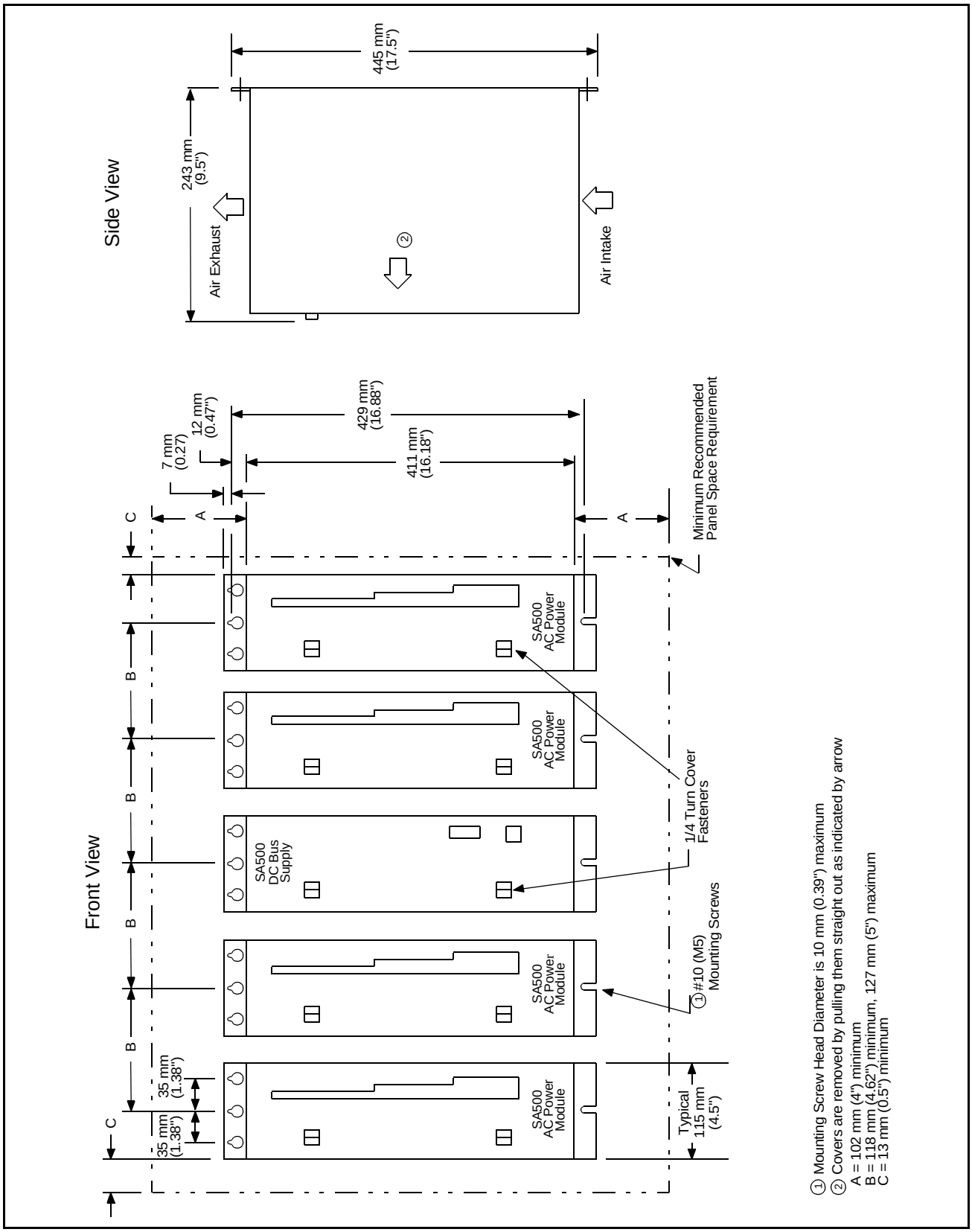

Figure 4.1 – Power Module Mounting Dimensions

Artisan Technology Group - Quality Instrumentation ... Guaranteed | (888) 88-SOURCE | www.artisantg.com

ATTENTION: To avoid the danger of an electrical shock or burn, only qualified personnel should install or service this equipment. Disconnect all power before working on this equipment. Dangerous voltages may exist after power is removed. Check the DC Bus Supply voltages each time power is removed before servicing. Failure to observe this precaution could result in severe bodily injury or loss of life.

Step 2. Connect the DC bus wires (POS, NEG, GND) from the DC Bus Supply to the Power Module. See figure 4.2.

The proper DC bus connection wires are provided with the Bus Supply. Do not substitute other wires for those supplied.

Do not over-tighten the nuts on the Power Module and DC Bus terminals. Use a nut-driver only and limit the torque to 4.0 Nm (36 lb-in).

Step 3. Connect the motor wires to the Power Module's terminals (U,V,W). See table 4.1.

Table 4.1 – Recommended Motor Wire Sizes

SA500 AC Power Modules	Motor Terminals	Minimum[1]/Maximum[2] Wire Sizes	
615055-1R	U-V-W,GND	4.8 / 21.6 mm^2	10 / 4 AWG
615055-1S	U-V-W,GND	4.8 / 21.6 mm^2	10 / 4 AWG
615055-1T	U-V-W,GND	8.5 / 21.6 mm^2	8 / 4 AWG
615055-1V	U-V-W,GND	13.7 / 21.6 mm^2	6 / 4 AWG

1. Minimum wire size required.
2. Maximum wire size allowed.

Step 4. Apply power to the input wiring of the DC Bus Supply and check the bus voltage. It should be 325 VDC nominal. Be sure the bus voltage is present at the Power Module's input terminals.

Artisan Technology Group - Quality Instrumentation ... Guaranteed | (888) 88-SOURCE | www.artisantg.com

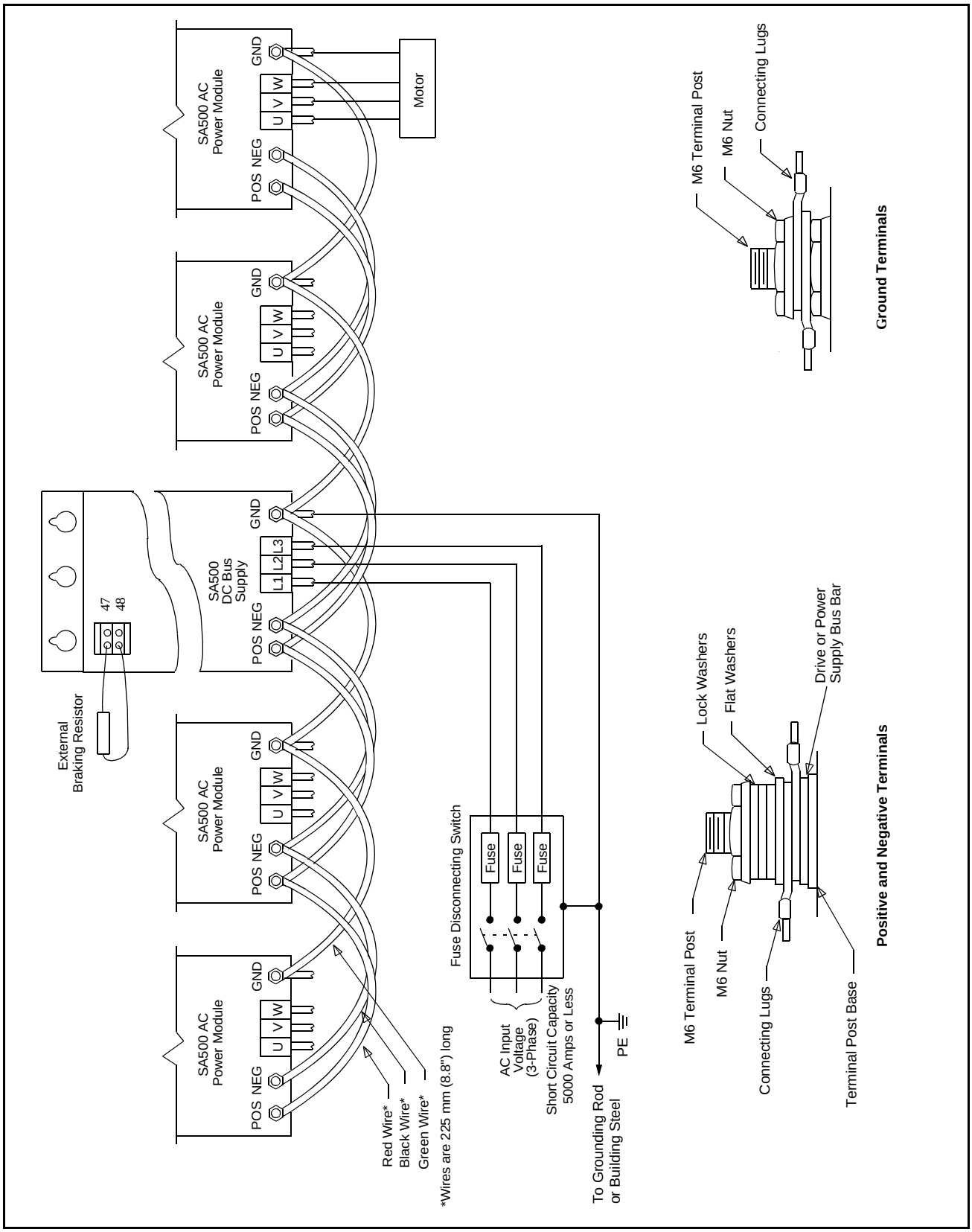

Figure 4.2 – DC Bus Supply Wiring

Artisan Technology Group - Quality Instrumentation ... Guaranteed | (888) 88-SOURCE | www.artisantg.com

4.3 Fiber-Optic Connection

ATTENTION: Turn off, lock out, and tag power to both the rack containing the UDC module and to its corresponding PMI hardware before viewing the fiber-optic cable or transmitter under magnification. Viewing a powered fiber-optic transmitter or connected cable under magnification may result in damage to the eye. For additional information refer to ANSI publication Z136.1-1981. Failure to observe this precaution could result in bodily injury.

Refer to the Distributed Power System Fiber-Optic Cabling instruction manual (S-3009) for the procedure required to install and test the fiber-optic cable between the Power Module and the UDC module.

The Power Module is shipped with dust caps covering the fiber-optic ports. The dust caps should not be removed until the fiber-optic cables are installed and should be replaced if the cables are disconnected.

4.4 Drive I/O Connections

The Drive I/O Cable (M/N 612401-T) provides the connection between the Drive I/O connector and a 16-point terminal block. The cable has an 18-pin connector on one end for connection to the Drive I/O Connector. Near the connector, the cable is labeled “C3-P2.” Near the terminal block connections, the cable is labeled “I/O.” Refer to figure 4.3 for the terminal block connections.

Artisan Technology Group - Quality Instrumentation ... Guaranteed | (888) 88-SOURCE | www.artisantg.com

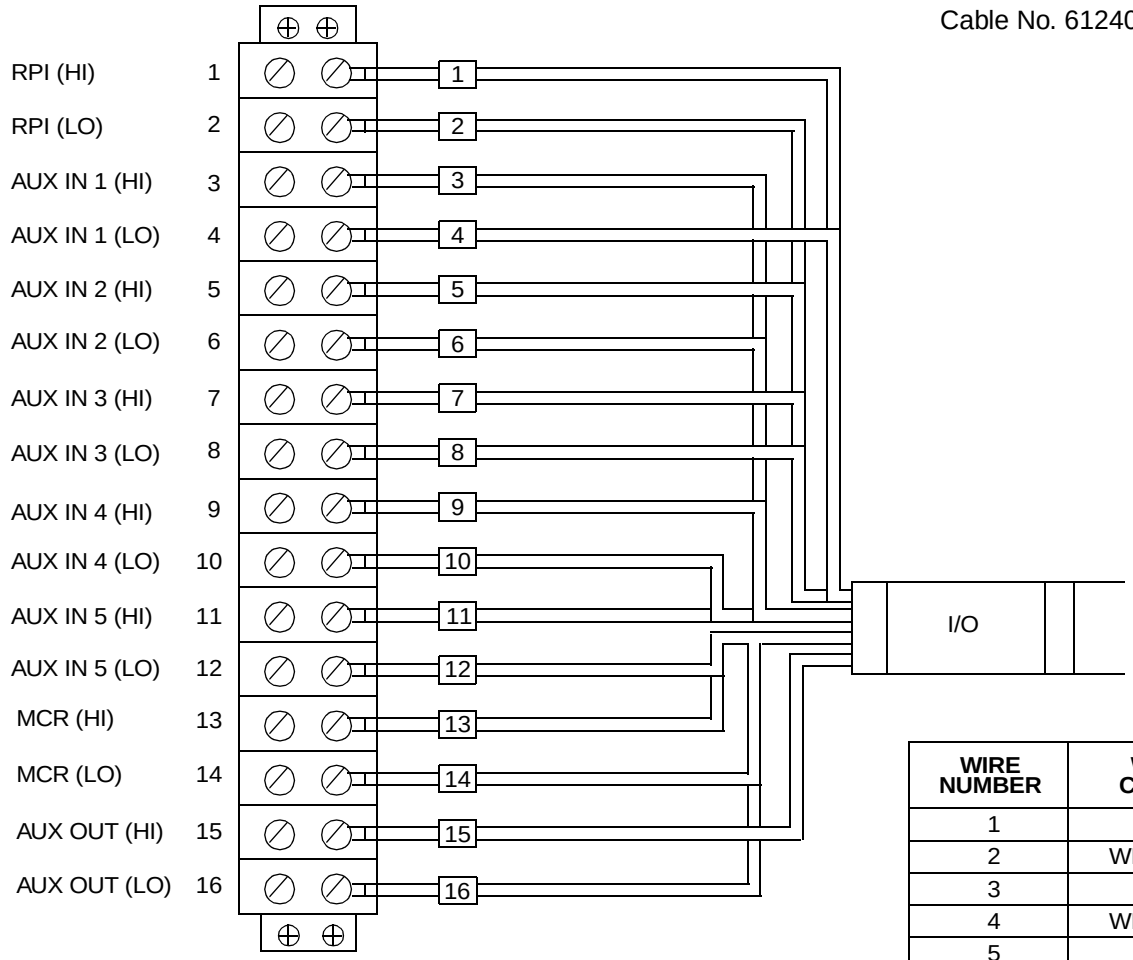

WIRE NUMBER	WIRE COLOR
1	BRN
2	WHT/BRN
3	RED
4	WHT/RED
5	ORG
6	WHT/ORG
7	YEL
8	WHT/YEL
9	GRN
10	WHT/GRN
11	BLU
12	WHT/BLU
13	VIO
14	WHT/VIO
15	GRY
16	WHT/GRY

Figure 4.3 – Terminal Block Connections for Drive I/O

Artisan Technology Group - Quality Instrumentation ... Guaranteed | (888) 88-SOURCE | www.artisantg.com

4.5 Rail Port Connection

Analog and digital I/O rails are connected to the Power Module using an I/O Interconnect Cable (M/N 45C5). Refer to the appropriate instruction manual for the installation and wiring procedures for your equipment. See table 4.2.

Table 4.2 – Rail I/O Instruction Manuals

Model No.	Description	Manual
45C001A	Digital Rails and Modules	J-3012
45C630	4-Decade Thumbwheel Switch Input Module	J-3654
45C631	4-Digit LED Output Module	J-3655
61C345	4-Channel Analog Current Input Rail	J-3689
61C346	4-Channel Analog Voltage Input Rail	J-3688
61C350	2-Channel Analog Voltage Input/Output Rail	J-3672
61C351	2-Channel Analog Current Input/Output Rail	J-3673
61C365	4-Channel Analog Current Output Rail	J-3694
61C366	4-Channel Analog Voltage Output Rail	J-3695

4.6 Resolver Feedback Connection

A cable is provided with your system for connection to the Resolver Feedback connector on the Power Module faceplate. The cable part number is stamped onto the cable and should be compared to the wiring diagrams shipped with your system.

The Resolver and Analog Input cable (M/N 612426-S) provides the connection between the Resolver Feedback connector and eight- and three-point terminal blocks. The eight-point terminal block is used for resolver connections. The three-point terminal block is used for analog input connections.

The cable has a 14-pin connector on one end for connection to the Resolver Feedback connector and is divided into two smaller cables, labeled “ANALOG” and “RESOLVER.” The cable labeled “ANALOG” connects to the three-point terminal block. The cable labeled “RESOLVER” connects to the eight-point terminal block. Near the connector, the cable is labeled “C3-P1”.

The connector is secured to the Power Module faceplate with two screws. When attaching the cable, alternately tighten each screw a few turns at a time until the connector is securely attached. Follow the same procedure to loosen the screws when removing the connector.

Refer to figure 4.4 for the terminal block connections.

Artisan Technology Group - Quality Instrumentation ... Guaranteed | (888) 88-SOURCE | www.artisantg.com

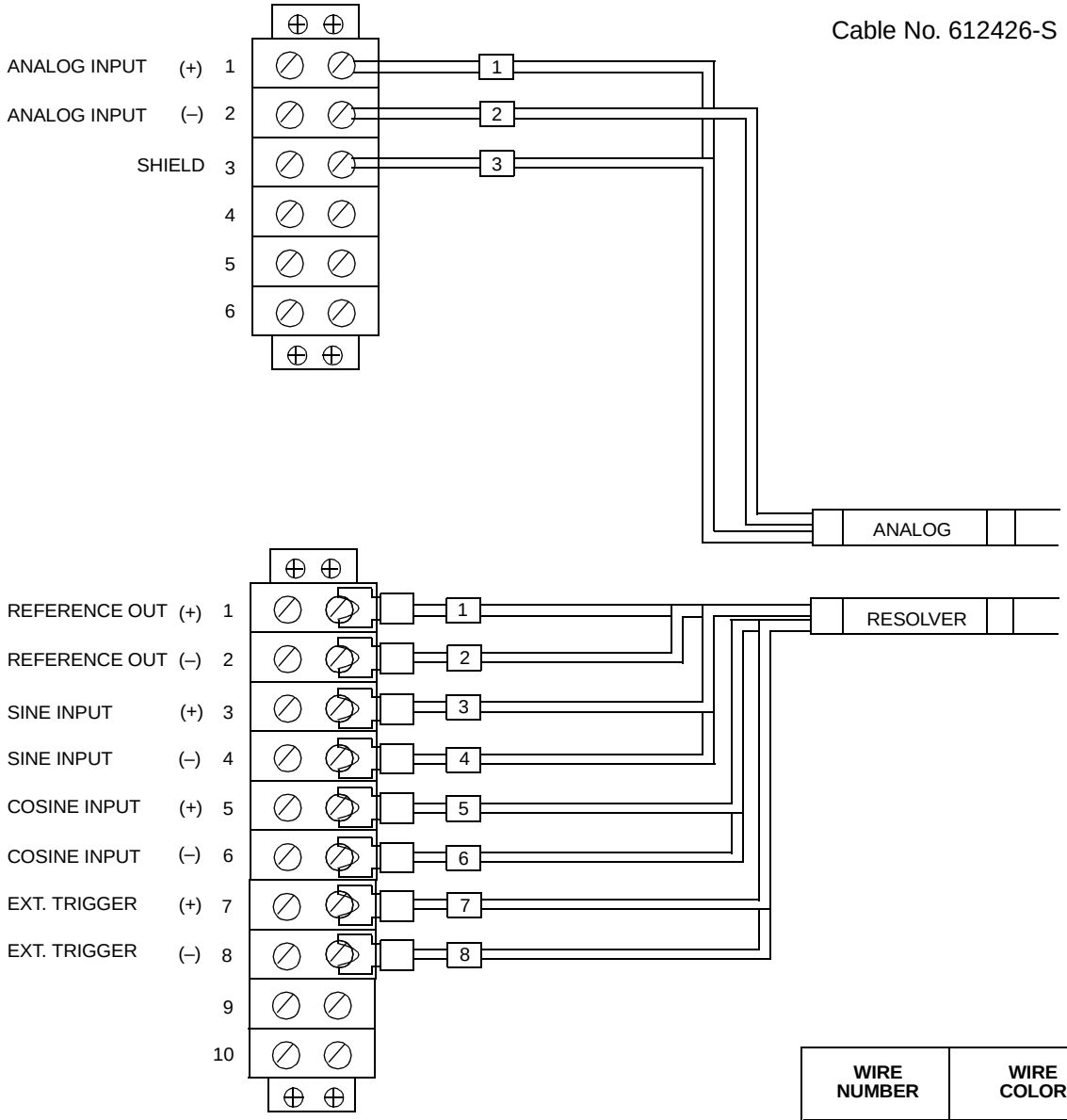

WIRE NUMBER	WIRE COLOR
ANALOG	
1	BLK
2	CLEAR
3	DRAIN (SHIELD)
RESOLVER	
1	BRN
2	WHT/BRN
3	RED
4	WHT/RED
5	ORG
6	WHT/ORG
7	YEL
8	WHT/YEL

Figure 4.4 – Terminal Block Connections for Resolver and Analog Input

Artisan Technology Group - Quality Instrumentation ... Guaranteed | (888) 88-SOURCE | www.artisantg.com

4.6.1 Resolver Input Connections

The resolver input connections are shown in table 4.3.

Note that Distributed Power Systems are designed to be used with the standard resolvers listed in this table 4.3 and in Appendix A.

Table 4.3 – Standard Resolver Connections

Resolver					Resolver & Drive I/O Module			
		Connector Pin						
Resolver Winding		613469-1,-2	800123, 800123-1	800123-2	TB	Faceplate Conn Pin	Resolver Module	
Reference Input	R1+	A	1	A	1	A	+	Ref. Output
	R2–	B	2	B	2	B	–	
Sine Output	S1+	C	3	D	3	D	+	Sine Input
	S3–	D	4	F	4	C	–	
Cosine Output	S2+	E	5	G	5	F	–	Cosine Input[1]
	S4–	F	6	E	6	E	+	
					7	H	+	Ext. Strobe[1]
					8	J	–	

1. Connections listed give a positive speed signal for counter-clockwise motor rotation (when facing the end opposite the output shaft). To reverse the polarity of this signal, interchange the cosine input leads (terminals 5 and 6).

Typical voltage levels associated with the resolver are as follows:

- **Reference:** This is a 2381 Hz sine wave with a typical amplitude of approximately 26V RMS. When measuring any of the resolver signals, make sure that the meter used can respond to 2381 Hz accurately or use an oscilloscope.
- **Sine or cosine feedback:** This is a 2381 Hz signal with an amplitude that varies with the rotation of the shaft. Maximum amplitude (as the shaft turns) should be approximately 11.8V at the feedback connector. Voltages may be different depending on the installation. The system adjusts the signal levels to develop 11.8V maximum at the module input.

Table 4.4 lists the cables that may be used for resolver connection.

Table 4.4 – Recommended Resolver Cables

Part No. 417900-	No. of Twisted Pairs	Length of Twist	Twists Per Inch	Size mm^2 (AWG)	Recommended Maximum Distance Per Resolver Type	
					X1	X2
-207CG	3	12.7(8.5 mm	(2(3)	0.823 (18)	255 m (850 ft)	240 m (800 ft)
-76EAD	1	12.7(8.5 mm	(2(3)	1.31 (16)	320 m (1050 ft)	310 m (1025 ft)

See Appendix A for maximum resolver speed specifications.

Artisan Technology Group - Quality Instrumentation ... Guaranteed | (888) 88-SOURCE | www.artisantg.com

4.6.1.1 Resolver Calibration

The resolver input can be used with X1 and X2 resolvers with cable distances as shown in table 4.4.

The PMI contains circuitry to synchronize the reference waveform to within 10 degrees of the returning waveforms. This synchronization corrects for any phase shift which can occur between the reference and stator signal (i.e., stator signals lagging the reference) due to unbalanced wire impedance. The impedance increases as the cable length increases. The synchronization is done automatically at power up after the PMI receives the configuration data from the UDC module informing it that a resolver has been selected for speed feedback.

The programmer must use the following calibration procedures to adjust the gain to the proper level and balance the sine/cosine waveforms. These procedures should be performed during initial system installation, if the resolver is replaced, or if the resolver cabling is changed (e.g., the cable is lengthened, shortened, or a different cable type is used). After the calibration procedures are performed, the gain and balance values are sent, along with other feedback data, to the UDC module to be stored for use at subsequent power ups. The values are stored in local tunables with the reserved names RES_BAL% and RES_GAN%.

Note that Distributed Power System drives are designed to be used with the standard resolvers listed in table 4.3 and described in Appendix A. The validity of the results of these calibration procedures is not guaranteed if resolvers other than those specified are used.

Gain Calibration

The gain calibration is performed when the value stored in RES_GAN% equals zero (i.e., at initial system start-up or by the operator setting the value to zero). This procedure may be performed while the resolver is turning or stationary. Do not perform this procedure while the minor loop is running (i.e., bit 0 of register 200/1200 is set) or a drive fault will be generated (register 202/1202, bit 8).

The procedure adjusts the gain to bring the stator voltages to a nominal 11.8 VAC at the board's input. The range of the gain adjustment is 0-37 VAC at the rotor with a resolution of 0.15V. The nominal value is 26 VAC. When the gain calibration procedure is completed, bit 6 of UDC register 201/1201 will be set, and the gain value will be stored in RES_GAN%. Large gain values (close to 255) may indicate a problem with the resolver wiring or connections. Always check the value stored in RES_GAN% after the gain calibration procedure has been completed.

Note that the resolver must be connected to the motor in order for this procedure to be completed. If the system determines a maximum gain value (255) and detects a broken wire (indicated by bit 8, register 202/1202) while attempting to calibrate the gain, it will assume that a resolver is not connected. When the broken wire bit is cleared by the operating system (indicating that a resolver has been connected), the gain calibration will automatically re-start. If bit 6 of register 201/1201 is not set, the calibration procedure has not been completed.

Artisan Technology Group - Quality Instrumentation ... Guaranteed | (888) 88-SOURCE | www.artisantg.com

Balance Calibration

The balance calibration procedure is initiated by setting UDC register 101/1101, bit 6 (RES_CAL@) after turning the drive on. The procedure takes from a few seconds to one minute to complete. It must be performed while the resolver is rotating at 5 RPM minimum speed (speed does not have to be constant). The faster the resolver is turning, the faster the balance calibration procedure will be performed. Balance calibration compensates for different cable lengths or characteristics. For example, one twisted-pair wire can yield more or less capacitance than another twisted-pair wire of the same length. Therefore, one channel could have more or less voltage on it than the other. If each stator winding has different capacitance on it, different response curves result. These curves should be equal for optimum performance.

The balance calibration procedure minimizes oscillations that occur due to imbalances between channels by adding capacitance to the sine or cosine channel. The operating system calculates the capacitance value which yields the smallest velocity variations with sine/cosine magnitudes within 1% of each other. Due to the characteristics of the cable or to noise problems, it is possible that the magnitudes will not be within 1% of each other. In this case, the system will calculate the capacitance value that minimizes velocity variations. When the balance calibration procedure is completed, bit 7 of UDC register 201/1201 will be set, and the balance value will be stored in RES_BAL%. If the sine/cosine magnitudes are not within 5% of each other, bit 5 of UDC register 203/1203 (Tuning Aborted Warning) will also be set.

Checking Calibration Procedure Results

As described previously, bits 6 and 7 of UDC register 201/1201 will be set to indicate the gain and balance calibration procedures, respectively, have been completed. These bits do not indicate that the procedures were successful or that the resulting values are valid. After each test, check the value stored in the local tunables RES_GAN% and RES_BAL%. If either value is near or at its maximum value, it may indicate a problem.

After the balance test, check the Tuning Aborted Warning bit (bit 5, UDC register 203/1203). This bit will be set if the balance calibration procedure was unsuccessful or yielded unexpected results. Failures may be caused by leaving the resolver unconnected during the procedure or using cable runs beyond the recommended lengths (refer to table 4.4). Calibration procedure failures will not prevent the operation of the drive.

Refer to the SA500 Drive Configuration and Programming instruction manual (S-3044) for more information about these local tunables.

4.6.1.2 Resolver Alignment

Resolver alignment is required for SA500 drives controlling brushless motors. The alignment procedure automatically determines the offset required to bring the rotor and stator fields in the motor 90° apart. **This procedure will cause the motor to move less than one revolution in both the forward and reverse directions for less than one minute. Uncouple the motor from the load to run this test if this motion could cause personal injury or would be harmful to your machine.**

Note that this procedure should be performed at the lesser of the following two values:

- Rated motor current, or
- 70% of the Power Module rated current

Artisan Technology Group - Quality Instrumentation ... Guaranteed | (888) 88-SOURCE | www.artisantg.com

The result of the resolver alignment test is written to the reserved tunable RES_ALN% by the PMI. The value in the variable represents the offset. See the SA500 Drive Configuration and Programming instruction manual (S-3044) for more information about the RES_ALN% tunable variable.

The alignment test is commanded by the programmer by setting bit 1 in register 100/1100. When the test is successfully completed, the PMI will set the Alignment OK bit (bit 1 in register 200/1200). The programmer can then turn off the enable bit in register 100/1100. The Tuning Aborted bit (bit 5 in register 203/1203) will be set if the range or travel during the test does not correspond properly to the number of motor poles and resolver type configured for the drive.

Note that the resolver alignment procedure for brushless motors must be performed whenever the resolver is disconnected from the motor for any reason.

4.6.1.3 Resolver Feedback Precautions

This section describes the resolver types and maximum motor speed supported by the SA500 drive, as well as precautions against loss of resolver feedback.

ATTENTION: The user is responsible for ensuring that the driven machinery, all drive train mechanisms, and the material in the machine are capable of safe operation at maximum speeds. Failure to observe these precautions could result in damage to equipment and severe bodily injury.

Maximum Safe Operating Speed

The user must determine the maximum safe operating speed for the motor, connected machinery, and material being processed. Then the user must either verify that the system is incapable of reaching that speed, or ensure that the correct overspeed parameter value has been entered during configuration.

Loss of Resolver Feedback

If resolver feedback is lost, brushless motors will remain relatively still and induction motors will rotate close to their slip frequency. Because the PMI is receiving no speed feedback, it will continue to provide current to the motor in an attempt to increase the motor speed. This will raise the temperature of both the motor and the Power Module.

The Power Module overtemperature fault bit (bit 0 in register 202/1202) will be set if the PMI detects that the motor current exceeds 100% of its continuous capacity for a preset amount of time. At maximum rated current, this fault will be detected in 0.5 seconds, or less if the motor is stalled instead of rotating. (Note that the same fault bit will be set if the PMI heatsink temperature exceeds a preset value.)

It is recommended that the programmer use the THERMAL OVERLOAD control block in the UDC task to provide additional protection against overheating of the motor that can result from loss of resolver feedback. This block can also protect against overheating of the Power Module due to sudden increases in current. Refer to the Control Block Language instruction manual (J-3676) for more information.

Artisan Technology Group - Quality Instrumentation ... Guaranteed | (888) 88-SOURCE | www.artisantg.com

Resolver Restrictions

The PMI cannot discriminate between X1 and X2 resolvers. It only detects electrical rotations. One mechanical rotation is equivalent to one electrical rotation for an X1 resolver and two electrical rotations for an X2 resolver. The practical limit of electrical speed that the module can detect is dependent both upon the resolver selected and upon the resolution selected during drive parameter configuration. See Appendix A.

4.6.2 Analog Input

Use 18-22 AWG twisted pair shielded cable to connect the analog device to the terminal block. Connect the shield to the SHIELD terminal, as shown in figure 4.4.

Figure 2.5 in chapter 2 shows the analog input circuit. Note that the input impedance has a finite value of approximately 1.3 megohms. This must be taken into account when connecting to a source with a high output impedance. Take steps to reduce noise and the possibility of ground loops. In the case of grounded sources, note the common mode voltage limit. Avoid connecting a remote ground into the Power Module. Use the differential connections to reduce noise. Keep input cable lengths as short as possible, and ground the shield at the source's earth ground.

4.7 Constant Power Calibration

Typically, an induction motor operating at or less than its rated speed will be capable of generating its rated torque output. When a motor is operating at more than its rated speed, its ability to generate torque decreases as the speed increases. To compensate for this reduction of torque-producing capability, the magnetizing current can be reduced as a function of motor speed or an external RPM signal. Reducing the magnetizing current (Iz) enables the motor's voltage to remain constant at speeds up to four times base speed. This allows operation in the motor's constant power region. See figure 4.5. The maximum speed attainable is dependent upon the motor and the application. Motors typically can only be operated in the 1.5:1 to 2:1 speed ranges.

Artisan Technology Group - Quality Instrumentation ... Guaranteed | (888) 88-SOURCE | www.artisantg.com

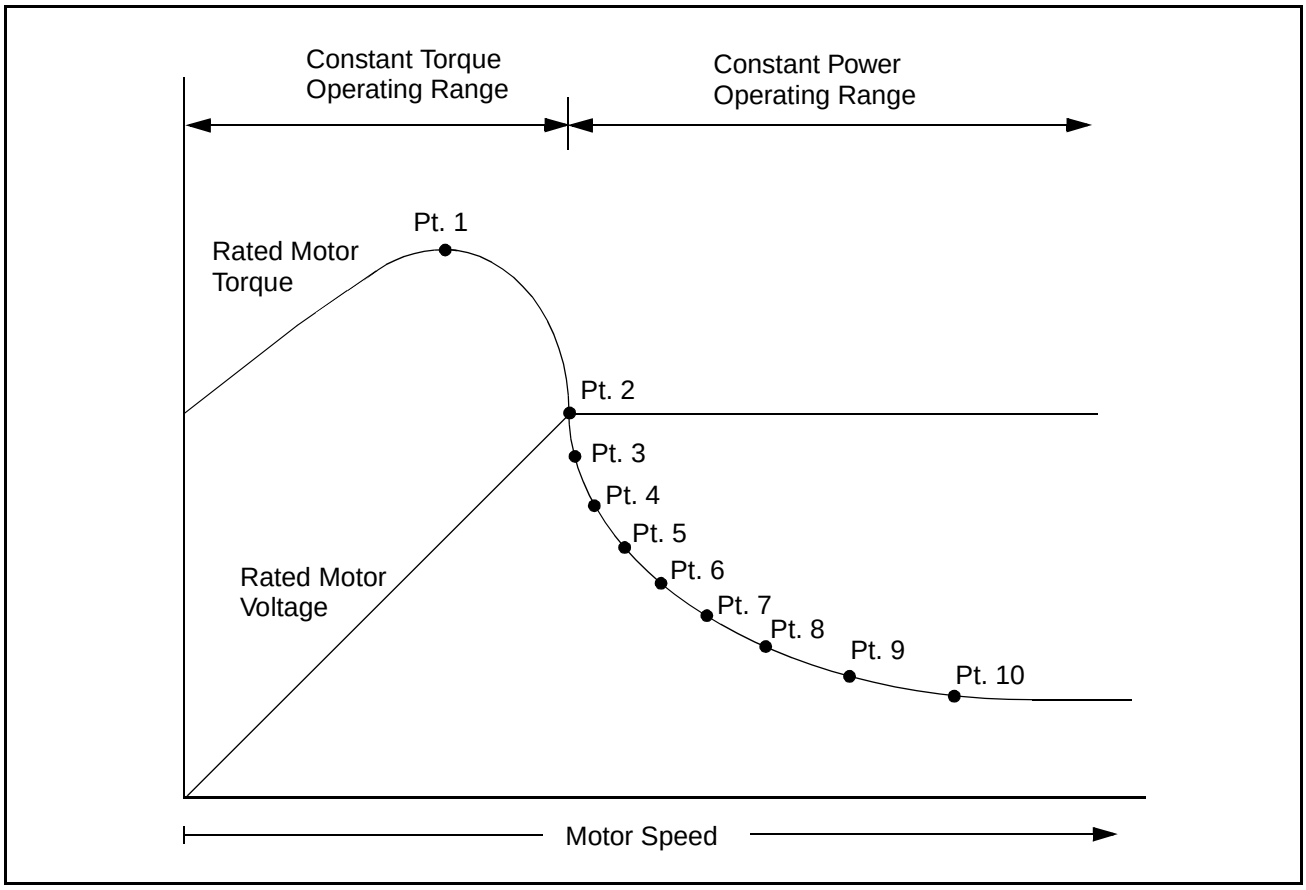

Figure 4.5 – Typical Motor Operation in the Constant Torque and Constant Power Regions

Constant power capability is only available for applications using induction motors with Vector - Speed Loop Enhanced regulators. You need to select Constant Power on the Motor Data parameter entry screen to enable constant power operation.

If application performance in the constant power region is at expected levels, you do not need to perform the following calibration procedure.

If application performance in the constant power region is not at expected levels, you may be able to improve it by changing the Iz current values stored in the STATOR_IZ tunables. See table 4.5. The default current values were chosen to work with a wide variety of motors. The performance of a specific motor may be improved by performing the following calibration procedure. This procedure determines the motor's custom current values and stores them in the STATOR_IZ tunables.

Artisan Technology Group - Quality Instrumentation ... Guaranteed | (888) 88-SOURCE | www.artisantg.com

Table 4.5 – STATOR_IZ Tunable Values

Reference Point[1]	Speed Reference (in counts)	Tunable Where the Iz Current Value is Saved
1	409	STATOR_IZ0E2%
2	1023 (at maximum speed)	STATOR_IZ1E2%
3	1125	STATOR_IZ2E2%
4	1227	STATOR_IZ3E2%
5	1329	STATOR_IZ4E2%
6	1635	STATOR_IZ5E2%
7	1941	STATOR_IZ6E2%
8	2247	STATOR_IZ7E2%
9	2859	STATOR_IZ8E2%
10	4095	STATOR_IZ9E2%

1. The number of reference points used in the calibration procedure is dependent upon the motor's base speed times the speed range (1.1 to 4.0).

Step 1. Turn off and lock out power.

Step 2. Disconnect the load from the motor.

Step 3. Connect an analog voltmeter across the motor terminals.

Step 4. Turn power on.

Step 5. Set Gear-in-Speed to four times the motor's base RPM.

Step 6. Set Overspeed to 110% of Gear-in-Speed.

Step 7. Put the tasks in the rack into run.

Step 8. Set TUNE_IZ@ to 1 (register 101, bit 10).

Step 9. Verify that TUNED_IZ@ = 1. The STATOR_IZ reference table will then fill in with default values.

Step 10. Reset TUNE_IZ@ to 0 (register 101, bit 10).

Step 11. Set NO_INTR@ to 1 (register 101, bit 0).

Step 12. Use the following equation to calculate the number of speed reference counts that are equivalent to the motor's base speed times the desired speed range (1.1 to 4.0):

$$\frac{4095\ (\text{Counts})}{\text{Gear}-\text{in}-\text{Speed}(\text{RPM})} = \frac{X\ (\text{Counts})}{\text{Base Speed (RPM)} \times \text{Speed Range}}$$

Step 13. Determine the number of reference points to be used from the STATOR_IZ reference table by looking up the number of speed reference counts (from step 11) in table 4.5. Find the reference point corresponding to the next highest speed reference value. This is the number of Iz current reference points that will have to be calibrated and stored in the STATOR_IZ tunables.

Artisan Technology Group - Quality Instrumentation ... Guaranteed | (888) 88-SOURCE | www.artisantg.com

Step 14. Set the application's Speed Reference equal to 1023 (reference point 2, STATOR_IZ1E2%). Do not change the value in reference point 1, STATOR_IZ0E2%.

Step 15. Start the drive. The motor should come up to speed and go into stable run. Record the motor voltage. This is the base motor voltage.

Step 16. Set the Speed Reference equal to 1125 (reference point 3, STATOR_IZ2E2%).

Step 17. Adjust the Iz current through tunable STATOR_IZ2E2% (reference point 3) until the motor voltage is equal to the base voltage measured in step 14.

Step 18. Repeat steps 15 and 16 to calibrate the remaining STATOR_IZ tunables that your application requires. Do not calibrate the last STATOR_IZ tunable at this time, but continue with step 18.

Step 19. Stop the drive.

Step 20. Set Gear-in-Speed equal to the motor's rated voltage times the desired speed range (1.1 to 4.0).

Step 21. Set the Speed Reference equal to 4095 (final reference point x, STATOR_IZxE2%).

Step 22. Start the drive. Adjust the Iz current through tunable STATOR_IZxE2% until the motor voltage is equal to the base voltage measured in step 14.

Step 23. Set NO_INTR@ (register 101, bit 0) to 0.

Step 24. Verify that all STATOR_IZ tunable values have been updated in block task XXASPD.BLK.

4.8 Power Module Replacement

ATTENTION: DC bus capacitors retain hazardous voltages after input power has been disconnected. After disconnecting input power from the DC bus supply, wait five (5) minutes and then measure the voltage at the POS and NEG terminals of the DC bus supply and each Power Module to ensure the DC bus capacitors are discharged before touching any internal components. Failure to observe this precaution could result in severe bodily injury or loss of life.

Use the following procedure to replace a Power Module:

Step 1. Turn off and lock out AC input power to the bus supply. Wait five minutes to allow the DC bus voltage to dissipate.

Step 2. Measure the DC bus potential across the POS and NEG terminals of the DC bus supply and each Power Module before working on the unit.

When the DC bus potential is down to less than 5V, touch a 50 Ω, 50 W or larger resistor across the POS and NEG terminals for 20 seconds to allow any remaining DC bus voltage to dissipate.

Remove the resistor and re-measure the DC bus potential to ensure the DC bus capacitors are completely discharged before touching any internal components.

Artisan Technology Group - Quality Instrumentation ... Guaranteed | (888) 88-SOURCE | www.artisantg.com

Step 3. Disconnect the DC Bus Supply wires from the Power Module's POS, NEG, and GND terminals. Disconnect the motor leads from the U, V, and W terminals on the Power Module.

Step 4. Remove the screws that attach the Power Module to its mounting surface.

Step 5. Install the replacement Power Module by reversing steps 3 and 4 above.

Artisan Technology Group - Quality Instrumentation ... Guaranteed | (888) 88-SOURCE | www.artisantg.com

CHAPTER 5

Diagnostics and Troubleshooting

The PMI monitors the Power Module for numerous fault and warning conditions. Faults cause the Power Module transistor gate firing signals to be turned off and bring the motor to a coast-to-rest stop. Warnings indicate problems in the Power Module and PMI, but do not shut down the drive.

See Appendix D for a cross-reference of fault and warning bits and associated LEDs. See the SA500 Drive Configuration and Programming instruction manual (S-3044) for more specific information about the Fault and Warning registers.

5.1 Drive Faults (UDC Register 202/1202)

Drive faults are reported in register 202/1202 and latched until the Fault Reset bit (register 100/1100, bit 8) is turned on. Most faults are signaled by an LED indicator on the Power Module faceplate. Note that the status of register 202/1202 is also reported in the error log for the UDC task.

Drive faults cause the PMI to shut down the drive. Drive faults do not cause the UDC module or the UDC task to shut down.

Power Module Overtemperature (Bit 0)

LED indicator: P.M. FLT

Bit 0 will be set if the temperature of the Power Module's heatsink exceeds the maximum rating or if the motor current exceeds the Power Module's capacity. Error code 1016 will also be displayed in the error log of the UDC task in which the fault occurred.

Instantaneous Overcurrent (Bit 1)

LED indicator: EXT FLT

Bit 1 will be set if any of the three motor feedback currents (Iu, Iv, Iw) exceeds 133% of the Power Module's maximum rated RMS current. Error code 1017will also be displayed in the error log of the UDC task in which the fault occurred.

DC Bus Overvoltage (Bit 2)

LED indicator: P.M. FLT

Bit 2 will be set if DC bus voltage exceeds 400 VDC. Error code 1018 will also be displayed in the error log of the UDC task in which the fault occurred.

Artisan Technology Group - Quality Instrumentation ... Guaranteed | (888) 88-SOURCE | www.artisantg.com

Vcc Power Supply Undervoltage (Bit 3)

LED indicator: P.M. FLT

Bit 3 will be set if the input to the +5V supply for the PMI Regulator drops below the necessary voltage required to maintain regulation. Error code 1019 will also be displayed in the error log of the UDC task in which the fault occurred.

Position Following Error (Bit 4)

LED indicator: N/A

Bit 4 will set if the maximum position error exceeds the value set in the PMI Tach Loss Maximum Position Error register (register 166/1166).

Velocity Error Exceeded (Bit 5)

LED indicator: N/A

Bit 5 will be set if the maximum velocity error exceeds the value set in the PMI Tach Loss Maximum Velocity Error register (register 156/1156).

Motor Speed Feedback Broken Wire (Bit 8)

LED indicator: FDBK OK

Bit 8 will set if a sine or cosine signal from the resolver is missing due to a broken wire or if the resolver gain tunable (RES_GAN%) has been set too low. Error code 1008 will also be displayed in the error log of the UDC task in which the fault occurred.

Overspeed / Slip > 100% (Bit 10)

LED indicator: EXT FLT

Bit 10 will be set if the motor's velocity exceeds the value entered as the Overspeed Trip (RPM) configuration parameter. Error code 1010 will also be displayed in the error log of the UDC task in which the fault occurred.

PMI Power Supply Fault (Bit 12)

LED indicator: PWR OK

Bit 12 will be set if the PMI power supply is not providing the required output. Error code 1012 will also be displayed in the error log of the UDC task in which the fault occurred.

PMI Bus Fault (Bit 13)

LED indicator: N/A

Bit 13 will be set if a problem is detected with the address and data bus on the PMI Regulator. Error code 1013 will also be displayed in the error log of the UDC task in which the fault occurred.

Artisan Technology Group - Quality Instrumentation ... Guaranteed | (888) 88-SOURCE | www.artisantg.com

UDC Run Fault (Bit 14)

LED indicator: N/A

Bit 14 will be set if the UDC task stops while the minor loop is running in the PMI Regulator. Error code 1014 will also be displayed in the error log of the UDC task in which the fault occurred.

Communication Lost (Bit 15)

LED indicator: COMM OK

Bit 15 will be set if the fiber-optic communication between the PMI Regulator and the UDC module is lost due to two consecutive errors of any type. Error code 1015 will also be displayed in the error log of the UDC task in which the fault occurred.

5.2 Power Module Warnings (UDC Register 203/1203)

Drive warnings are reported in register 203/1203 and latched until the Warning Reset bit (register 100/1100, bit 9) is turned on. These warnings cause no action by themselves.

Excessive Ground Current (Bit 0)

Bit 0 will be set if ground current exceeds the configured ground fault current level.

Reference in Limit Warning (Bit 4)

Bit 4 will be set if the PMI torque reference value (register 102/1102) exceeds the maximum value permitted (+/- 4095) and is being limited by the PMI.

Auto Tuning Aborted (Bit 5)

Bit 5 will be set if an automatic tuning procedure (resolver balance, gain calibration, or alignment) is not successful.

Speed or Position Gain Out of Limit (Bit 10)

Bit 10 will be set if a speed or position loop volatile gain value (registers 150/1150 to 166/1166) is out of limit. This bit will only be set if the position or speed loops are enabled.

Rail Communication Warning (Bit 13)

Bit 13 will be set if a rail communication problem is detected and logged in register 4, 10, 16, or 22. Refer to tables 3.4 to 3.6 in instruction manual S-3044 for detailed information.

CCLK Not Synchronized in PMI (Bit 14)

Bit 14 will be set if the CCLK counters in the PMI and UDC modules are momentarily unsynchronized.

Artisan Technology Group - Quality Instrumentation ... Guaranteed | (888) 88-SOURCE | www.artisantg.com

PMI Communication Warning (Bit 15)

Bit 15 will be set if a fiber-optic communication error is detected between the PMI and the UDC module. Communication errors in two consecutive messages will cause a drive fault.

5.3 Power Module Failure

The SA500 Power Module has no user-serviceable parts with the exception of the rail fuse described in section 2.2.2. If the Power Module malfunctions and the cause cannot be determined using the LEDs, the Drive Fault register, or the Drive Warning register, the Power Module must be replaced.

Refer to chapter 4 of this manual for the guidelines to be followed when installing a new Power Module.

Artisan Technology Group - Quality Instrumentation ... Guaranteed | (888) 88-SOURCE | www.artisantg.com

APPENDIX A

Technical Specifications

SA500 Power Module Part Numbers and Ratings

Part Number	Continuous RMS Current Rating (55° C)	Maximum Output Current (RMS) (0.5 seconds)[1]
615055-1R	14 A	17.5 A (125%)
615055-1S	28 A	35 a (125%)
615055-1T	35 A	70 A (200%)
615055-1V	48 A	106 A (220%)

1. See Appendix I.

Compatible SA500 DC Bus Supplies

- 615055-2R 50 Amps (internal braking resistor)
- 615055-1S 50 Amps (external braking resistor)
- 615055-1T 100 Amps (internal braking resistor)
- 615055-1V 100 Amps (external braking resistor)

Ambient Conditions

- Storage Temperature: -30 to 85° C (-22 to 185° F).
- Operating Temperature: 0 to 50° C (32 to 122° F)
- Relative Humidity: 5 - 95% non-condensing
- Altitude: Do not install above 1000 m (3300 ft) without derating output power. For every 91.4 m (300 ft) above 1000 m, derate the output current by 1%.

Power Module Dimensions

- Height: 445 mm (17.5 in)
- Width: 115 mm (4.5 in)
- Depth: 250 mm (9.8 in)
- Weight: 11.0 kg (24.3 lbs)

Input Power (from SA500 DC Bus Supply)

- Nominal: 325 VDC
- Maximum: 375 VDC

Artisan Technology Group - Quality Instrumentation ... Guaranteed | (888) 88-SOURCE | www.artisantg.com

Maximum Power Dissipation

- 615055-1R 14 A 120 W
- 615055-1S 28 A 180 W
- 615055-1T 35 A 275 W
- 615055-1V 48 A 300 W

Power Module DC-to-DC Converter

- Internally powered via DC Bus Supply

DC Output to PMI Regulator

- 5 VDC (+/- 5%)
- 24 VDC (+/- 15%)
- +/- 15 VDC (+/- 5%)

System Power Requirements

- +5 VDC @ 1500 mA (3000 mA maximum)
- +15 VDC @ 300 mA
- - 15 VDC @ 300 mA

Fiber-Optic Port

- Transmitter: 1
- Receiver: 1
- Data rate: 10 Mbd
- Coding: Manchester
- Protocol: HDLC (compatible with UDC module)
- Maximum distance to UDC: 750 m (2500 ft)

Rail I/O

- Channels: 2
- Analog/digital rails only; no local heads

Resolver Input Specifications

- Resolution: 12 or 14 bits (software-selectable)
- Required resolver accuracy (electrical)
    - 12-bit configuration: 5 arc minutes (typical)
    - 14-bit configuration: 1 arc minute

Artisan Technology Group - Quality Instrumentation ... Guaranteed | (888) 88-SOURCE | www.artisantg.com

Resolver Input Specifications (Continued)

- External strobe input:
  - Input signal: 24 volt positive pulse
  - Maximum pulse frequency: 1 kHz
  - Minimum pulse width: 300 µsec
  - Typical transport delay: 250 µsec

Resolver Part No.	Resolver Type	Accuracy Max. Error Spread (Electrical)	Resolver Mechanical Max. Speed	Resolver & Drive I/O Module Interface Limitation		Resulting Effective Resolver Max. Speed [1]	
				12-bit	14-bit	12-bit	14-bit
613469-1R, -2R	x1	16 arc minutes	8,000 RPM	10,000 RPM	4,200 RPM	8,000 RPM	4,200 RPM
613469-1S, 2S	x2	10 arc minutes	5,000 RPM	5,000 RPM	2,100 RPM	5,000 RPM	2,100 RPM
800123-R,-1R,-2R	x1	10 arc minutes	5,000 RPM	10,000 RPM	4,200 RPM	5,000 RPM	4,200 RPM
800123-S,-1S,-2S	x2	10 arc minutes	5,000 RPM	5,000 RPM	2,100 RPM	5,000 RPM	2,100 RPM

1. Use this value to determine what resolver type to use in DPS applications.

Analog Input Specifications

- Differential input range: +/-10 VDC
- Common mode input range: +/-30 VDC
- Input impedance: 1 MΩ
- Bandwidth: 320 Hz
- Resolution: 4.88 mV
- Accuracy: 2%
- Resistive isolation: 1 MΩ (not operating)

Digital Input Specifications

- Number of inputs: 6
- Maximum operating voltage: 132 V rms
- Minimum turn-on voltage: 92 V rms
- Maximum turnoff voltage: 22 V rms (50-60 Hz)
- Maximum off-state current: 3 mA
- Minimum turn-on current (except RPI): 14 mA
- Minimum RPI turn-on current: 7.5 mA @ 92 V rms
- Isolation: input to logic common: 1500 VAC

Artisan Technology Group - Quality Instrumentation ... Guaranteed | (888) 88-SOURCE | www.artisantg.com

Digital Input Specifications (Continued)

- Isolation: input to input: 150 VAC
- Input current at 115V 60 Hz: 23.5 mA
- Maximum input delay @50 Hz: 35 msec
- Maximum input delay @60 Hz: 26 msec

Digital Output Specifications

- Number of outputs: 2
- Contact rating: 2 A @ 115 VAC
- Maximum operating voltage: 132 VAC
- On state voltage drop at rated current: 1.5 V @ 2 A
- Maximum inrush (1 sec): 5 A
- Maximum continuous current: 2 A per output
- Maximum leakage current: 4.8 mA @ 132 VAC
- Isolation: outputs to logic common: 150 VAC

PMI Regulator Rail Fuse

- Type GMC, 250 V, 1 A
- 10,000 A interrupting capability

Artisan Technology Group - Quality Instrumentation ... Guaranteed | (888) 88-SOURCE | www.artisantg.com

APPENDIX B

Brushless Industrial Motor Data and Curves

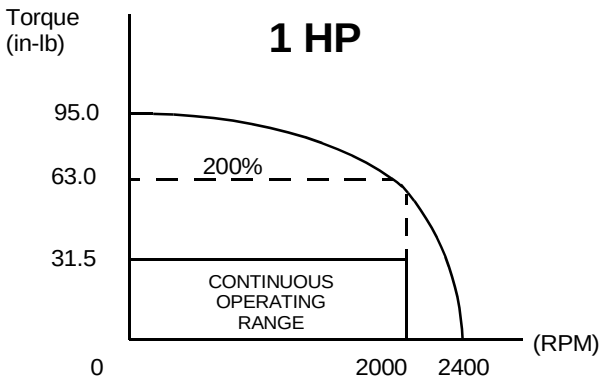

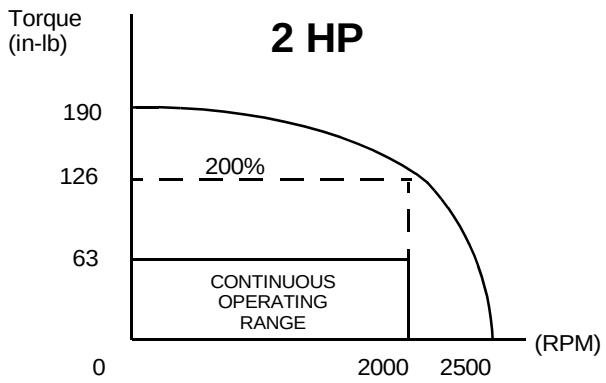

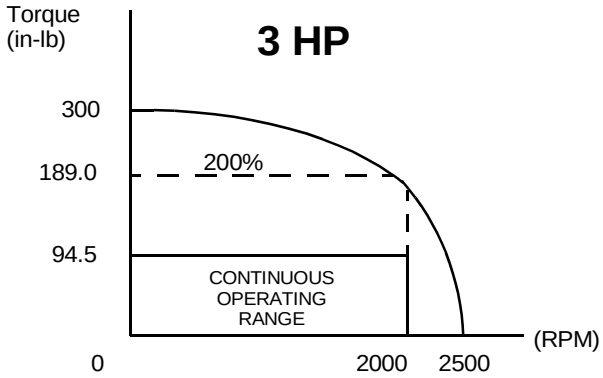

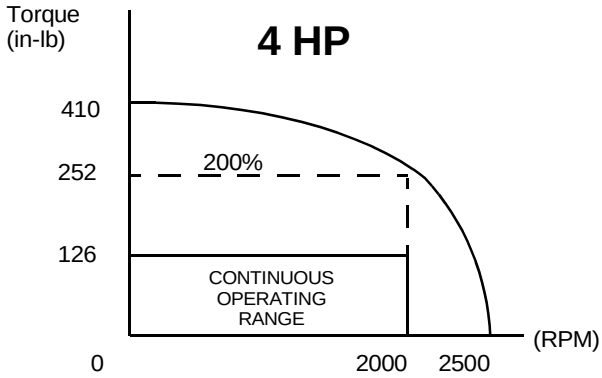

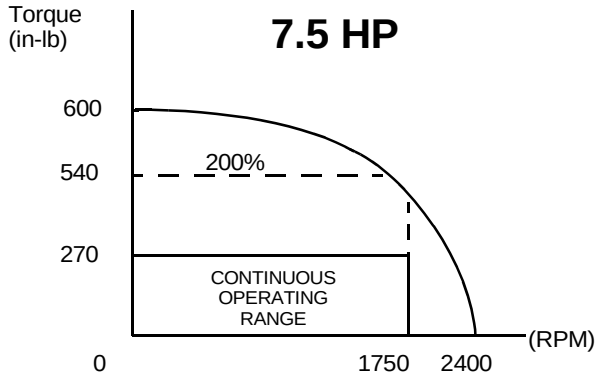

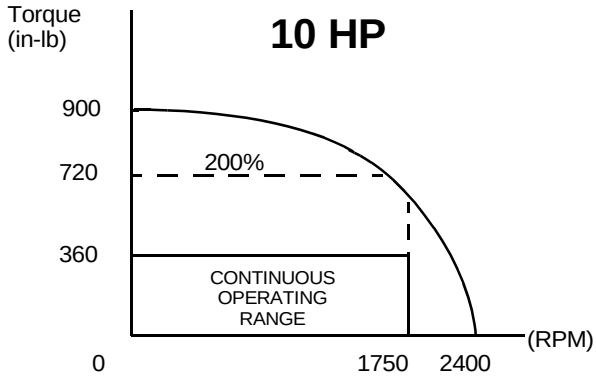

Artisan Technology Group - Quality Instrumentation ... Guaranteed | (888) 88-SOURCE | www.artisantg.com

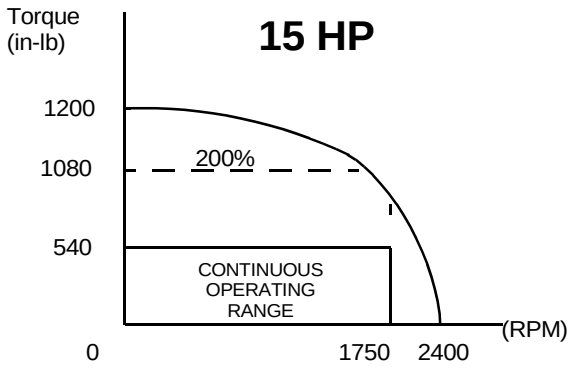

Model Number	HP	Base Speed (RPM)	Torque (in-lb)	Inertia (lb-in-S^2
B14H3050	1	2000	31.5	0.012
B14H3060	2	2000	63	0.021
B14H3070	3	2000	94.5	0.031
B14H3080	4	2000	126	0.041
P21M0309	7.5	1750	270	0.0895
P21M0310	10	1750	360	0.1268
P21M0311	15	1750	540	0.1641

Artisan Technology Group - Quality Instrumentation ... Guaranteed | (888) 88-SOURCE | www.artisantg.com

Brushless Servo Motor Curves

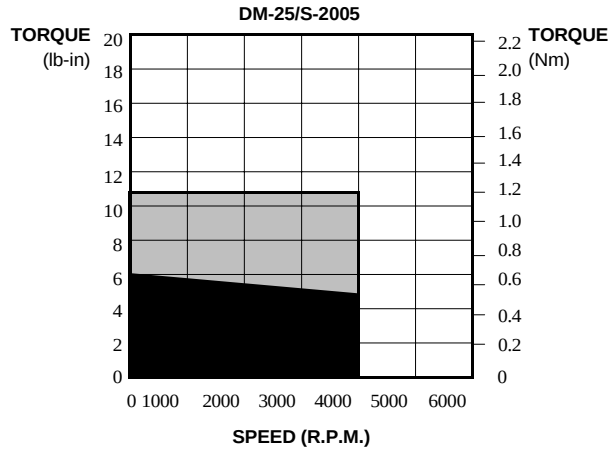

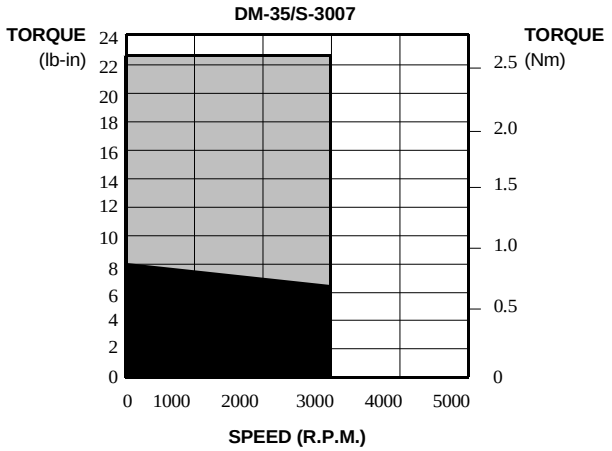

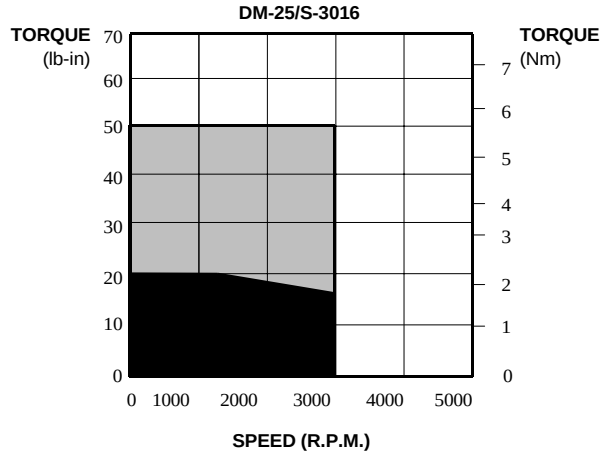

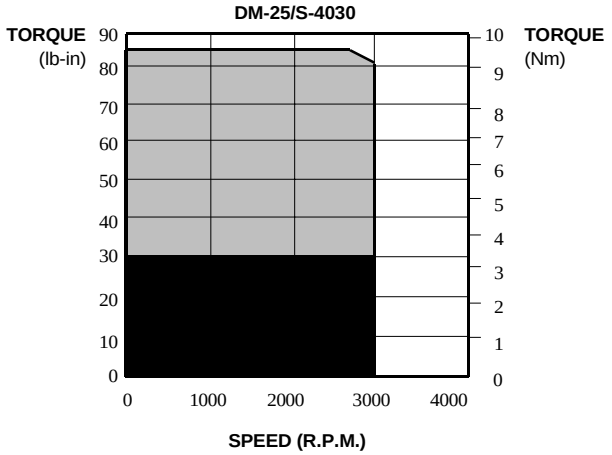

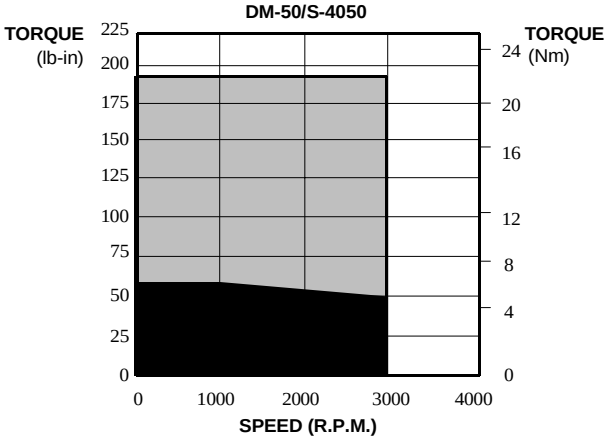

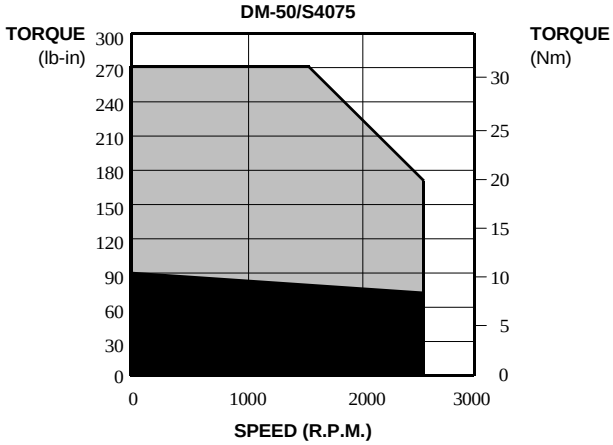

INTERMITTENT OPERATING RANGE

CONTINUOUS OPERATING RANGE

Artisan Technology Group - Quality Instrumentation ... Guaranteed | (888) 88-SOURCE | www.artisantg.com

Brushless Servo Motor Curves

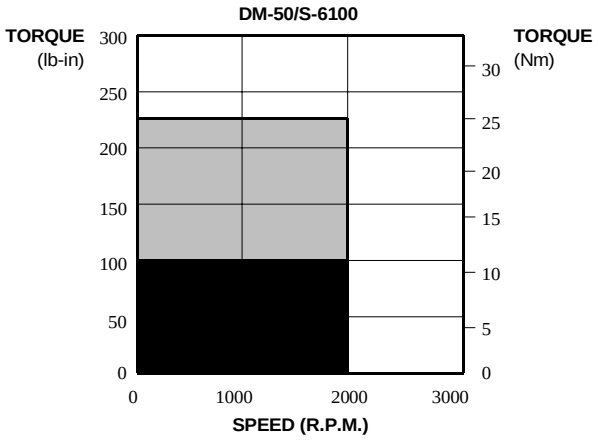

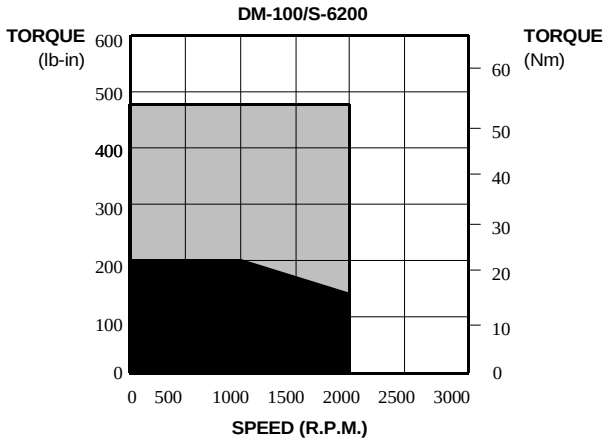

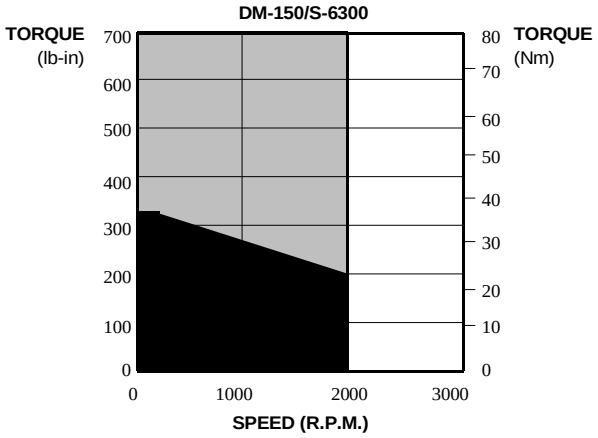

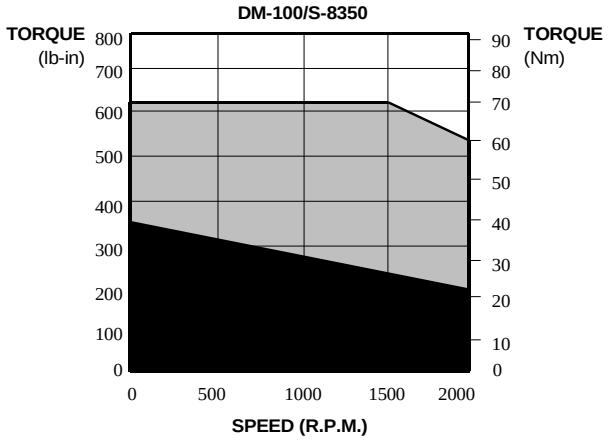

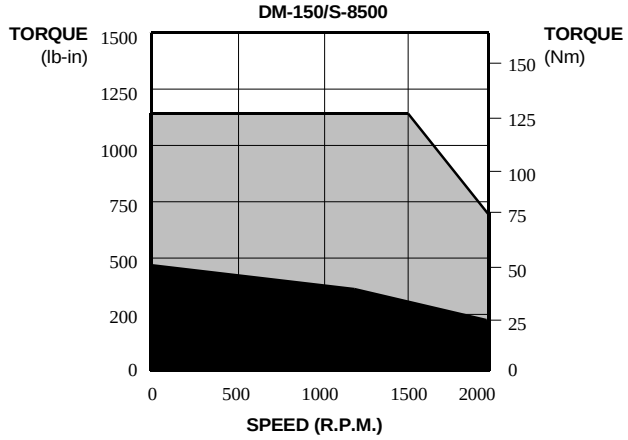

INTERMITTENT OPERATING RANGE

CONTINUOUS OPERATING RANGE

Artisan Technology Group - Quality Instrumentation ... Guaranteed | (888) 88-SOURCE | www.artisantg.com

Table B.1 – Brushless Servo Motor - Engineering Data

Motor Frame		S-2005	S-3007	S-3016	S-4030	S-4050	S-4075	S-6100	S-6200	S-6300	S-8350	S-8500
Motor Model No.		**S-2005-K -R00AD**	**S-3007-N -R00AD**	**S-3016-N -R00AD**	**S-4030-P -R00AD**	**S-4050-P -R00AD**	**S-4075-R -R00AD**	**S-6100-Q -R00AD**	**S-6200-Q -R00AD**	**S-6300-Q -R00AD**	**S-8350-S -R00AD**	**S-8500-S -R00AD**
Stall Torque (1)	lb-in	5.0	7.0	20	30	60	90	100	200	325	350	450
	Nm	0.56	0.79	2.26	3.39	6.78	10.2	11.3	22.6	36.7	39.5	50.8
(2) Speed (rpm)		4000	3000	3000	3000	3000	2500	2000	2000	2000	2000	2000
Jm (lb-in-sec^2 x 10^{-3})		0.13	0.27	0.72	2.2	4.1	6.0	12.0	21.0	30.0	56.0	83.0
I (kg-m^2 x 10^{-3})		0.015	0.030	0.080	0.25	0.46	0.68	1.4	2.4	3.4	6.3	9.4
(3) Kt	lb-in/A	1.17	2.5	2.5	4.4	4.4	6.6	6.0	5.8	6.2	7.6	8.2
	Nm/A	0.13	0.28	0.28	0.50	0.50	0.74	0.68	0.66	0.70	0.86	0.92
(4) Ke (V/krpm)		16	34	34	60	60	90	82	80	85	104	112
(5) R (ohms)		2.6	6.6	1.3	2.0	0.8	0.9	0.49	0.18	0.12	0.13	0.10
(5) L (mH)		4.1	12	3.4	9.0	3.3	5.4	4.4	2.2	1.2	2.5	2.4
Friction	lb-in	0.12	0.12	0.25	0.30	0.60	1.2	1.2	2.1	3.2	2.8	3.5
	Nm	0.014	0.014	0.028	0.034	0.068	0.14	0.14	0.24	0.36	0.32	0.40
Damping	lb-in/ krpm	0.06	0.09	0.12	0.30	0.40	0.60	0.9	1.4	1.7	3.4	3.8
	Nm/kr pm	0.007	0.010	0.014	0.034	0.045	0.068	0.10	0.16	0.19	0.38	0.43
(1) Thermal Resistance	°C/Wa tts	1.45	1.2	0.89	0.79	0.57	0.48	0.34	0.31	0.24	0.23	0.21
Weight	lbs	6.0	7	10.4	16.1	24.0	31.1	42.3	63.0	83.1	103	128
	kg	2.7	3.2	4.7	7.3	10.9	14.1	19.2	28.6	37.7	46.7	58.1

(1) Motor is mounted on a 12” x 12” x 1/2” aluminum plate @ 40°C ambient temperature.
(2) Maximum continuous operating speed
(3) Peak amps of per phase sine wave
(4) Peak volts of per phase sine wave
(5) Phase-to-phase

Important: As of the writing of this manual, some of the motors listed in the table had not been manufactured. Therefore, it is strongly advised that the user calculate the motor parameters per the equations listed in Appendix F of the SA500 Drive Configuration and Programming instruction manual (S-3044).

Artisan Technology Group - Quality Instrumentation ... Guaranteed | (888) 88-SOURCE | www.artisantg.com

Artisan Technology Group - Quality Instrumentation ... Guaranteed | (888) 88-SOURCE | www.artisantg.com

APPENDIX C

Custom DC Bus Supplies

The Auxiliary DC Bus Disconnect Panel can be used to facilitate the use of custom DC bus supplies. This panel supplies the necessary capacitance for the Power Module so that bus inductance, normally a concern in applications in which the DC bus supply is not near the Power Module, does not have an adverse affect on Power Module operation.

The panel consists of a disconnect, DC fuses, DC bus capacitors, and a pre-charge circuit. Each panel supports one SA500 Power Module.

The panel is available in two models as listed below:

- M/N 615055-3R 7.5 HP Bus Disconnect Module
- M/N 615055-3S 15 HP Bus Disconnect Module

Artisan Technology Group - Quality Instrumentation ... Guaranteed | (888) 88-SOURCE | www.artisantg.com

Artisan Technology Group - Quality Instrumentation ... Guaranteed | (888) 88-SOURCE | www.artisantg.com

APPENDIX D

UDC Register Cross-Reference

Description	Register	Bit
Drive I/O control Drive I/O status	101/1101 201/1101	
Resolver scan position data Resolver strobe position	215/1215 216/1216	
Enable external strobe Enable external strobe falling edge External strobe detected External strobe level	101/1101 101/1101 201/1201 201/1201	8 9 8 9
Enable resolver balance calibration test Resolver gain calibration test complete Resolver balance calibration test complete Balance calibration failure	101/1101 201/1201 201/1201 203/1203	6 6 7 5
Analog input data	214/1214	
PMI Regulator bus fault	202/1202	13
Rail data Rail faults	0 - 23 4, 10, 16, 22	
PMI-UDC communication status	80-89 / 1080-1089	

Artisan Technology Group - Quality Instrumentation ... Guaranteed | (888) 88-SOURCE | www.artisantg.com

LED	Register	Bit
PWR OK LED PMI power supply fault	202/1202	12
OK LED Watchdog time-out	N/A	
COMM OK LED Communication lost	202/1202	15
PM FLT LED Overtemperature Vcc supply undervoltage	202/1202 202/1202	O 3
EXT FLT LED Instantaneous overcurrent Overspeed fault Application program control	202/1202 202/1202 101/1101	1 10 2
RAIL FLT LED Rail communication error	203/1203	13
FDBK OK LED Motor speed feedback broken wire	202/1202	8
RPI LED RPI input is on	201/1201	0
MCR LED MCR output is on	N/A	
AUX IN1 LED Aux input 1/MFDBK	201/1201	1
AUX IN2 LED Aux input 2	201/1201	2
AUX IN3 LED Aux input 3	201/1201	3
AUX IN4 LED Aux input 4	201/1201	4
AUX IN5 LED Aux input 5	201/1201	5
AUX OUT LED Aux output	101/1101	4

Artisan Technology Group - Quality Instrumentation ... Guaranteed | (888) 88-SOURCE | www.artisantg.com

APPENDIX E

Status of Data in the AutoMax Rack After a STOP_ALL Command or STOP_ALL Fault

	AutoMax Processor	UDC Module	PMI Processor
LOCAL tunable variables	retained	retained	retained
LOCAL variables	retained	reset to 0	N/A
COMMON memory variables	non-volatile are retained; others are reset to 0	N/A	N/A
I/O variables (including UDC dual port memory	inputs retained and updated; outputs are reset to 0	see below	all I/O is reset to 0
Input values, including: Feedback registers UDC/PMI communication status registers UDC Error Log info	retained	retained	N/A
Output values, including: Command registers Application registers ISCR registers Scan-per-interrupt register Scans-per-interrupt counter	reset to 0	reset to 0	N/A
Parameter configuration variables	N/A	retained	N/A
UDC test switch information	N/A	retained	N/A
D/A setup configuration	N/A	retained	N/A
Operating system	retained	retained	retained

Artisan Technology Group - Quality Instrumentation ... Guaranteed | (888) 88-SOURCE | www.artisantg.com

Artisan Technology Group - Quality Instrumentation ... Guaranteed | (888) 88-SOURCE | www.artisantg.com

PMI Regulator Block Diagram

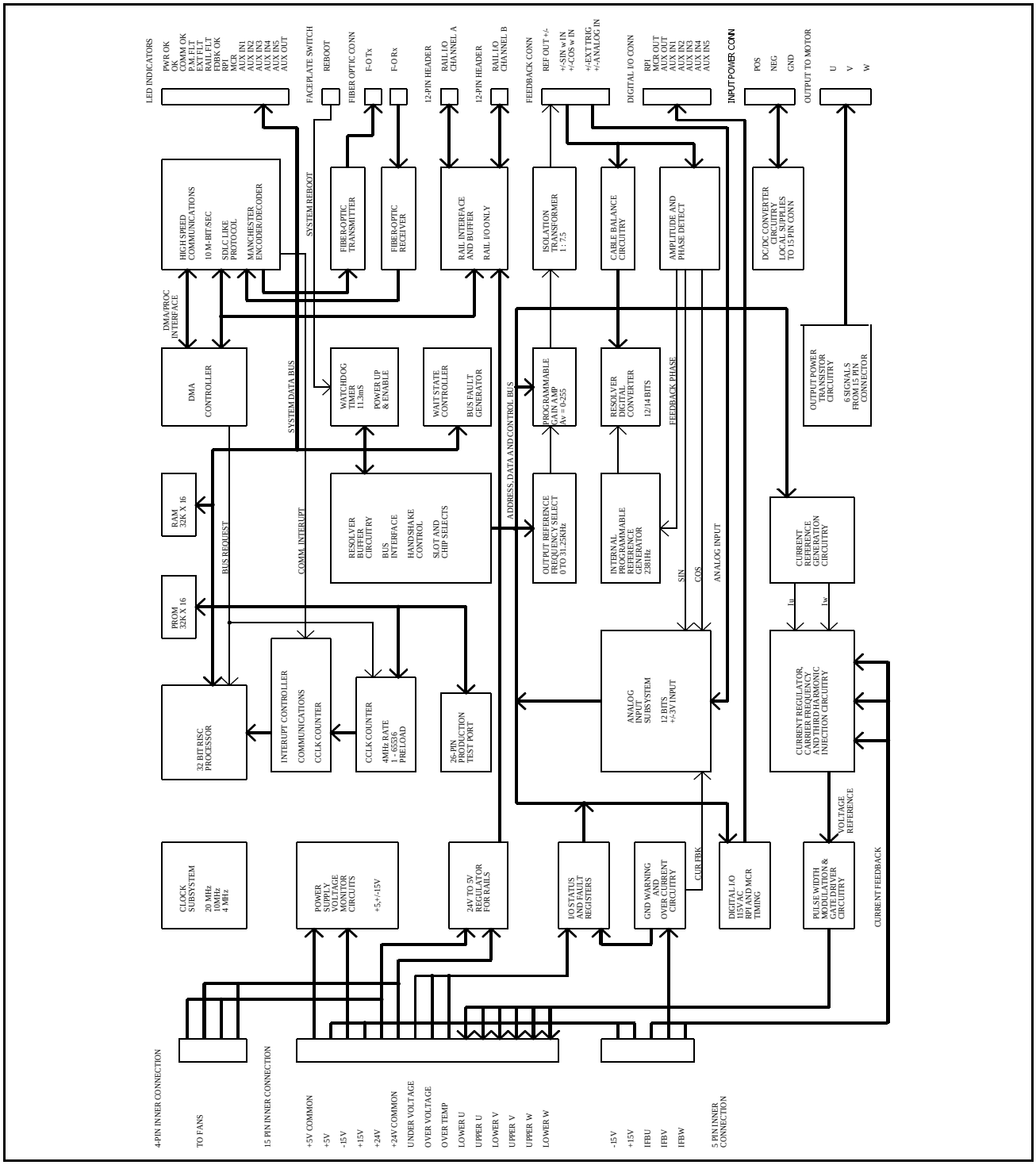

Artisan Technology Group - Quality Instrumentation ... Guaranteed | (888) 88-SOURCE | www.artisantg.com

Artisan Technology Group - Quality Instrumentation ... Guaranteed | (888) 88-SOURCE | www.artisantg.com

Power Circuitry Block Diagram

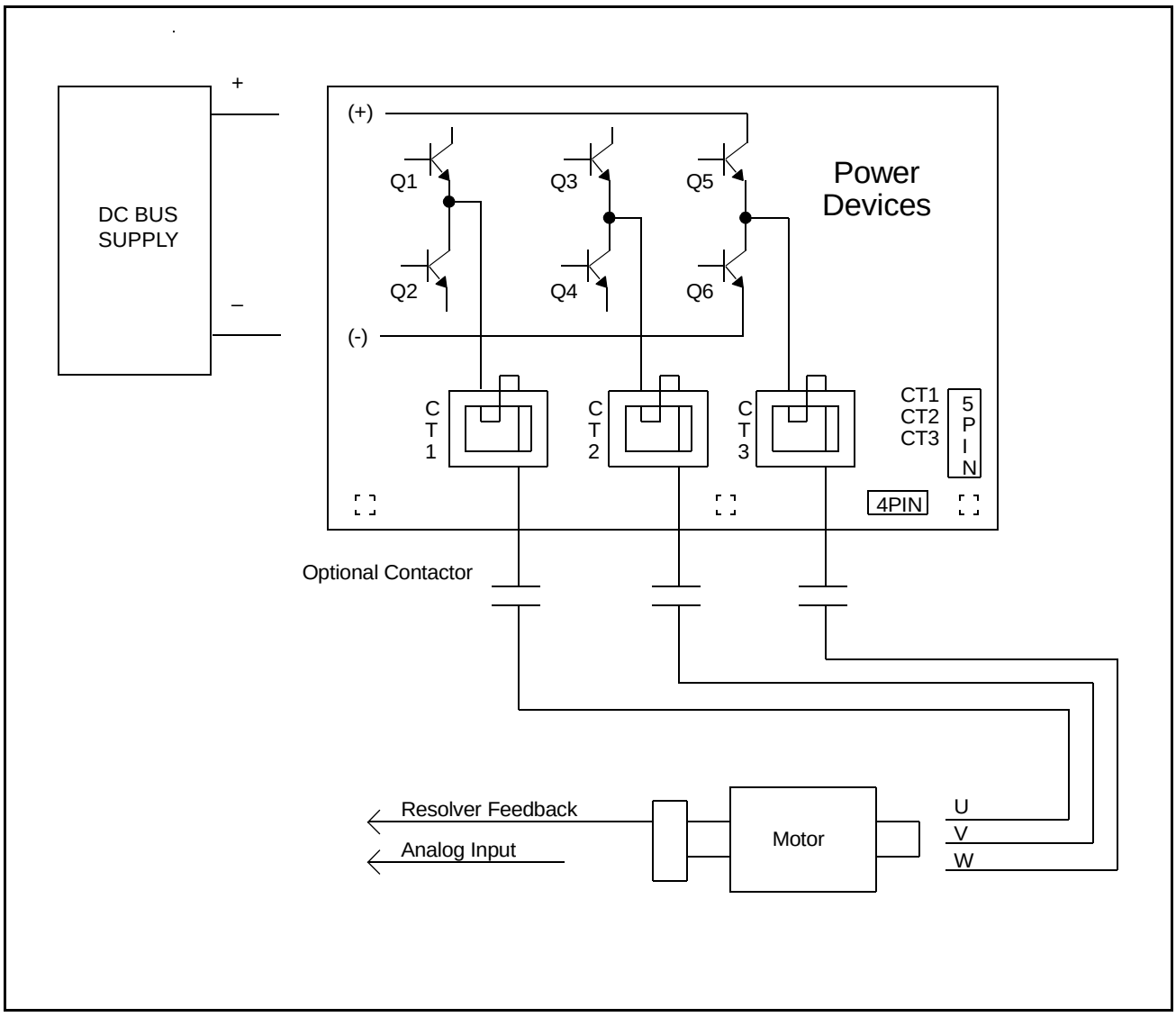

Artisan Technology Group - Quality Instrumentation ... Guaranteed | (888) 88-SOURCE | www.artisantg.com

Artisan Technology Group - Quality Instrumentation ... Guaranteed | (888) 88-SOURCE | www.artisantg.com

APPENDIX H

Compliance with Electromagnetic Compatibility Standards

H.1 Introduction

This appendix provides information on the SA500 DC Bus Supplies and AC Power Modules' compliance with European Community electromagnetic compatibility (EMC) standards and covers the following:

- requirements for standards compliance
- guidelines on installing the equipment
- instructions on how the drive must be wired.

The SA500 DC Bus Supplies and AC Power Modules listed on the Declaration of Conformity (DOC) (Ref: Drawing 422802-201) have been tested and are in compliance with the following standards when installed as described in this manual and amended herein:

- EN55011 (1991) Limits and methods of measurement of radio disturbance characteristics of industrial, scientific, and medical (ISM) radio-frequency equipment.
- EN50082-2 (1995) Electromagnetic Compatibility - Generic Immunity Standard Part 2: Industrial Environment

Note that the conformity of the SA500 DC Bus Supplies and AC Power Modules to the above standards does not guarantee that the entire installation will be in conformance.

For a copy of the Declaration of Conformity, contact your local Rockwell Automation sales office.

H.2 Compliance Requirements

In order for the SA500 DC Bus Supplies and AC Power Modules to conform to the standards listed in section H.1, the equipment must:

- be accompanied by the DOC (Ref: Drawing 422802-201).
- have a CE mark. This mark is found on the product.
- be mounted inside a cabinet.
- be powered through a EMI line filter.
- be installed in accordance with the instructions in this appendix.

If these conditions are not met and CE conformity is desired, contact your local Rockwell Automation Drive Systems Sales Representative.

Artisan Technology Group - Quality Instrumentation ... Guaranteed | (888) 88-SOURCE | www.artisantg.com

H.3 Installing the Equipment

The equipment must be mounted inside a steel cabinet. The cabinet door must be grounded to the main cabinet. Any accessory plates attached to the cabinet door must be grounded to the same point on the cabinet as the door. The cabinet must also have floor pans with the cutouts for cable entries kept to an absolute minimum.

The SA500 DC Bus Supplies and AC Power Modules and EMI Filter should be mounted to the panel in accordance with the installation instructions provided in chapter 3 of this manual.

H.4 Wiring Practices

This section describes how the SA500 drive must be wired to conform to the standards listed in section H.1. Figure H.1 shows an SA500 wiring example.

H.4.1 AC Input Power

A 110 Amp three-phase line filter (M/N 612421-2A) must be installed in the power lines. The leads between the filter and the DC Bus Supply should be as short as possible and must be routed away from the leads to the input of the filter. Both ground connections must be used and the ground leads should be kept as short as possible.(£ 6.0”). This filter may be mounted to a separate bracket and placed on edge to reduce the panel footprint so long as the bracket is properly grounded to the control panel.

A three-phase input power surge protector (M/N 600686-45A) must be installed on the 230 VAC lines at the line input to the EMI Filter. The leads on the surge protector should be kept as short as possible.

The 115 VAC source voltage used to power the digital I/O must be supplied through a 1 kVA control transformer (M/N 417155-V) with a MOV (M/N 411026-X) mounted across transformer terminals X1 and X2. The X2 terminal of the control transformer must also be grounded to the control panel.

H.4.2 Motor Output

The motor leads (three phases and ground) must be installed in a single metallic conduit. The conduit should be terminated at the cabinet.

H.4.3 Grounding

The incoming 230 VAC three-phase power must be connected to the grounding stud on the DC Bus Supply.

The DC Bus Supply and AC Power Module must be grounded in accordance with section 4.1 of this manual. The ground lead from the motor must be connected to the AC Power Module and then connected to the DC Bus Supply via the jumper supplied with the AC Power Module.

Artisan Technology Group - Quality Instrumentation ... Guaranteed | (888) 88-SOURCE | www.artisantg.com

H.4.4 Rail Ports

The two rail Rail Ports must not be used for CE applications. As an alternative, digital I/O can be configured using either the digital I/O on the Resolver and Drive I/O Module or the Allen-Bradley Remote I/O Interface Module (M/N 57C443) and Allen-Bradley I/O.

H.4.5 Resolver and Analog Input Wiring

Resolver cable M/N 417900-207CG is recommended. This specific cable was chosen per instruction manual D2-3115-2, (Installing, Operating, and Maintaining Engineered Drive Systems), as the only cable not required to be installed in conduit. Conduit is not required for CE purposes, but it may be required for a specific application.

Use shielded 2-conductor cable for analog input wiring. The shield drain wire is to be grounded to the cable terminal board and left open at the opposite end.

H.4.6 Digital I/O Wiring

The 115 VAC source voltage for the digital I/O must be supplied from the secondary of the isolation transformer. When a main contactor is used, an RC suppressor (M/N 600686-33A or equivalent) must be installed across the coil contacts.

Artisan Technology Group - Quality Instrumentation ... Guaranteed | (888) 88-SOURCE | www.artisantg.com

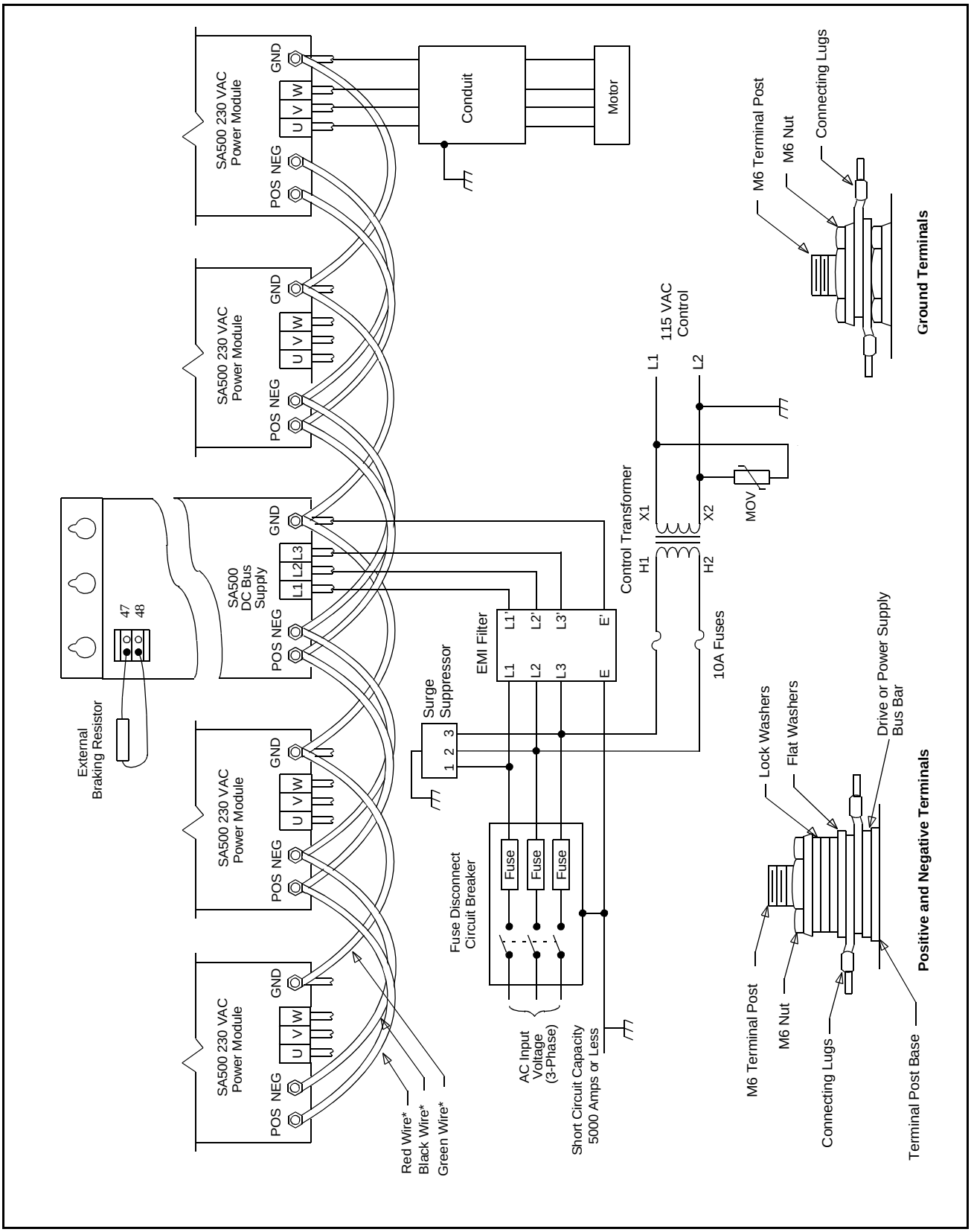

Figure H.1 – Typical SA500 Wiring Example for CE Requirements

Artisan Technology Group - Quality Instrumentation ... Guaranteed | (888) 88-SOURCE | www.artisantg.com

APPENDIX I

SA500 Power Module Output Current Overload Ratings

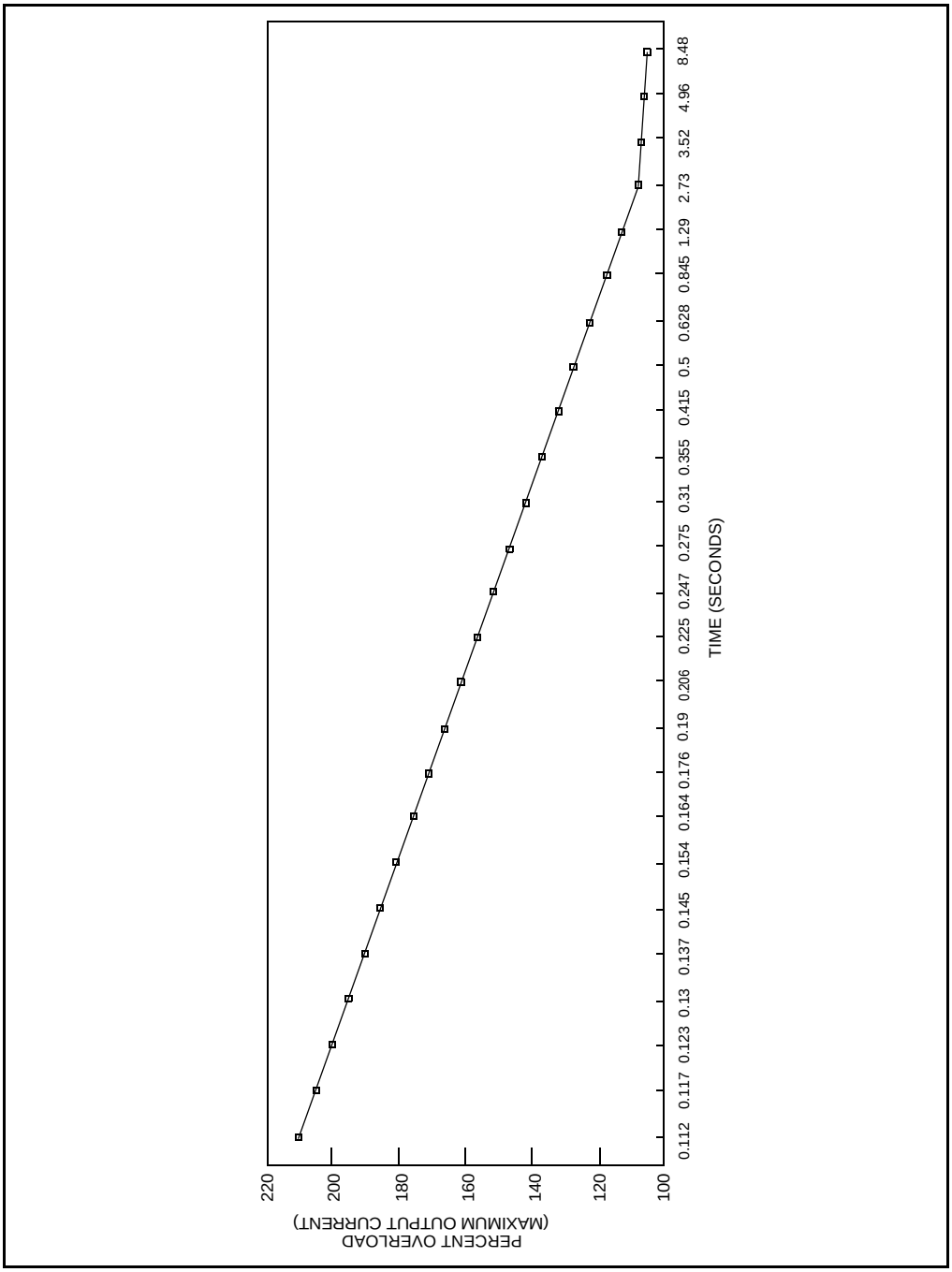

Figure I.1 – P/N 615055-1R (14 Amp Continuous Current)

Artisan Technology Group - Quality Instrumentation ... Guaranteed | (888) 88-SOURCE | www.artisantg.com

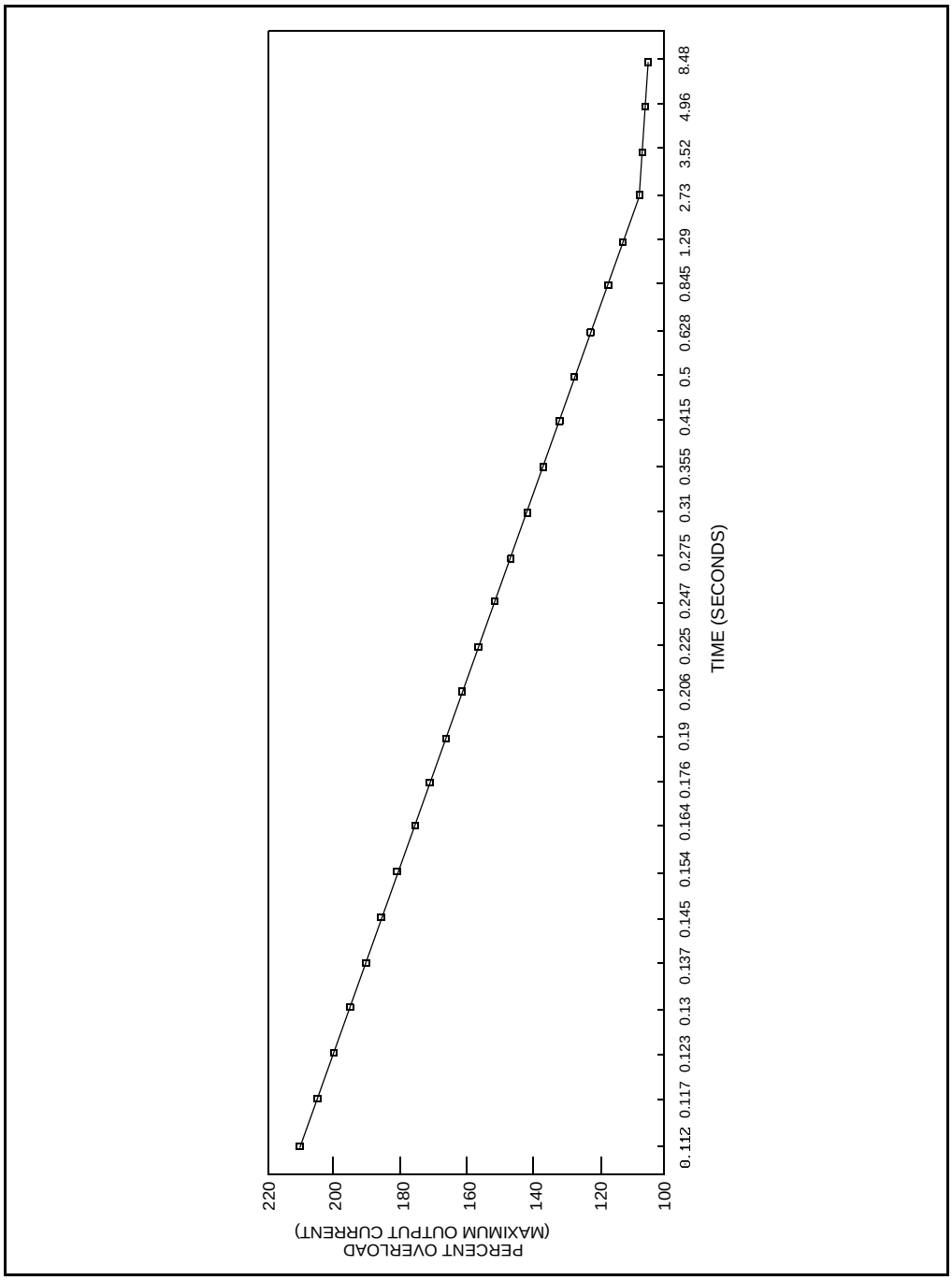

Figure I.2 – P/N 615055-1S (28 Amp Continuous Current)

Artisan Technology Group - Quality Instrumentation ... Guaranteed | (888) 88-SOURCE | www.artisantg.com

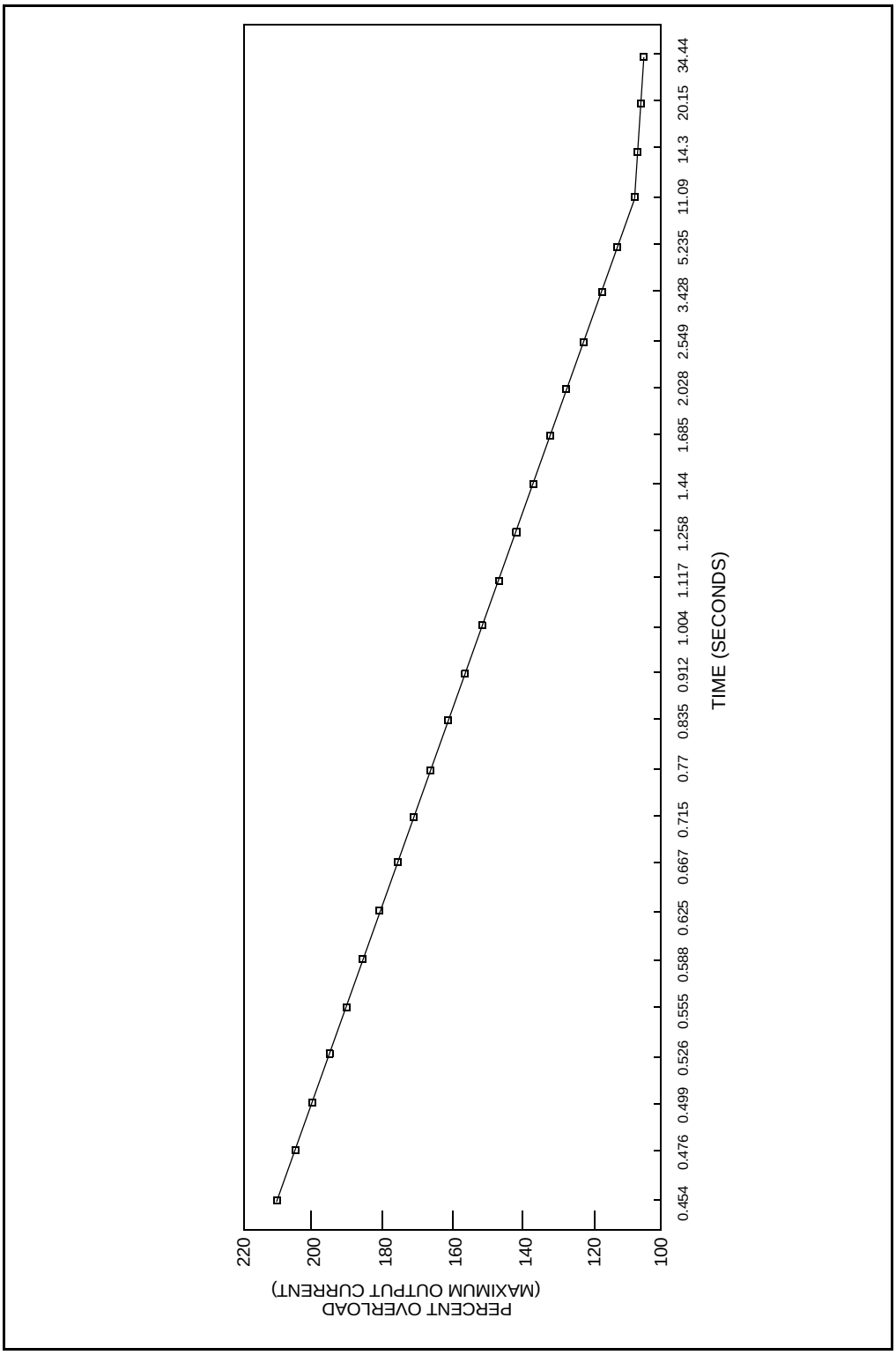

Figure I.3 – P/N 615055-1T (35 Amp Continuous Current)

Artisan Technology Group - Quality Instrumentation ... Guaranteed | (888) 88-SOURCE | www.artisantg.com

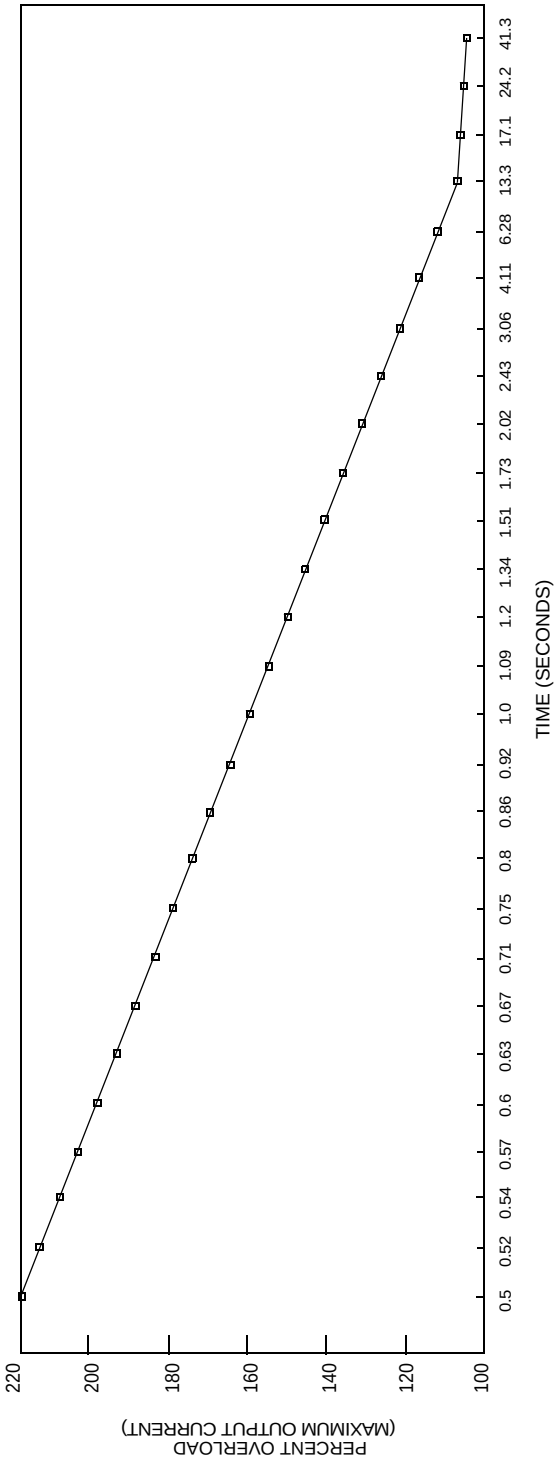

Figure I.4 – P/N 615055-1V (48 Amp Continuous Current)

Artisan Technology Group - Quality Instrumentation ... Guaranteed | (888) 88-SOURCE | www.artisantg.com

INDEX

A

Analog input
circuit, 2-10
See also Installation guidelines
specifications, A-3
terminal block connections, 4-9
AutoMax rack
status of data, E-1
Auxiliary input circuit, 2-11

B

Brushless industrial motor
data and curves, B-1 to B-5

C

Compliance with electromagnetic compatibility
standards, H-1 to H-4
Connector
drive I/O, 2-10 to 2-11
external, 2-6
resolver feedback, 2-8 to 2-9
Constant power calibration, 4-14 to 4-17
STATOR_IZ tunable values, 4-16
typical motor operation, 4-15
Current ratings, 1-1

D

DC bus supply
custom, C-1
wiring *See* Installation guidelines
DC-to-DC converter, 3-2
Diagnostics and troubleshooting, 5-1 to 5-4
Digital I/O
specifications, A-3 to A-4
Distributed power system overview, 1-2
Documentation, 1-4
Drive hardware configuration, 1-2
Drive I/O, 2-10 to 2-12
connections *See* Installation Guidelines
connector pinout, 2-11
specifications, A-3 to A-4

E

Electrical description, 3-1 to 3-4
External strobe input circuit, 3-3 to 3-4
timing diagram, 3-4

F

Faceplate connectors, 2-6 to 2-12
Faults, 5-1 to 5-3
communication lost, 5-3
DC bus overvoltage, 5-1
instantaneous overcurrent, 5-1
motor speed feedback broken wire, 5-2
overspeed/slip >100%, 5-2
PMI bus fault, 5-2
PMI power supply fault, 5-2
position following error, 5-2
Power Module overtemperature, 5-1
UDC run fault, 5-3
Vcc power supply undervoltage, 5-2
velocity error exceeded, 5-2
Fiber-optic
connection See Installation guidelines
ports, 2-7

G

Grounding See Installation guidelines

I

Installation guidelines, 4-1 to 4-18
analog input, 4-14
constant power calibration, 4-14 to 4-17
DC bus supply wiring, 4-5
drive I/O connections, 4-6 to 4-7
fiber-optic connection, 4-6
mounting dimensions, 4-3
Power Module installation, 4-1 to 4-5
rail port connection, 4-8
recommended motor wire sizes, 4-4
resolver feedback connection, 4-8 to 4-14
wiring and grounding, 4-1
Introduction, 1-1 to 1-4

Artisan Technology Group - Quality Instrumentation ... Guaranteed | (888) 88-SOURCE | www.artisantg.com

L

LED indicators, 2-3 to 2-5

M

Mechanical description, 2-1 to 2-12
Mounting dimensions *See* Installation guidelines

O

Output current overload ratings, I-1 to I-4

P

Part numbers, 1-1
PMI regulator block diagram, F-1
PMI/UDC register cross reference, D-1 to D-2
Power circuitry block diagram, G-1
Power Module with and without cover, 2-2
Power-up routine, 3-1 to 3-2

R

Rail I/O instruction manuals, 4-8
Rail ports, 2-7 to 2-8
    connection *See* Installation guidelines
    rail fuse location, 2-8
Related publications, 1-4
Replacement of Power Module, 4-17
Resolver
    alignment, 4-12 to 4-13
    balance calibration, 4-12
    cables, 4-10
    calibration, 4-11 to 4-12
    data format (12-bit mode), 3-2
    data format (14-bit mode), 3-3
    feedback connection, 4-8 to 4-14
    feedback connector, 2-8 to 2-9
    feedback precautions, 4-13 to 4-14
    gain calibration, 4-11
    input connections, 4-10 to 4-14
    interface, 3-2 to 3-4
    loss of feedback, 4-13
    maximum safe operating speed, 4-13
    restrictions, 4-14
    specifications, A-2 to A-3
    terminal block connections, 4-9
Run permissive input (RPI) circuit, 2-12

S

SA500 drive overview, 1-3

T

Technical specifications, A-1 to A-4

W

Warnings, 5-3 to 5-4
    auto tuning aborted, 5-3
    CCLK not synchronized in PMI, 5-3
    excessive ground current, 5-3
    PMI communication warning, 5-4
    rail communication warning, 5-3
    reference in limit warning, 5-3
    speed or position gain out of limit, 5-3
Wiring
    See Installation guidelines
    typical SA500 wiring example, H-4

Artisan Technology Group - Quality Instrumentation ... Guaranteed | (888) 88-SOURCE | www.artisantg.com

DIF

Documentation Improvement Form

Use this form to give us your comments concerning this publication or to report an error that you have found. For convenience, you may attach copies of the pages with your comments. After you have completed this form, please return it to:

Rockwell Automation
RGA (Technical Publications)
25001 Tungsten Road
Cleveland, Ohio 44117

Fax: 216.266.7120

Publication Name:	
Publication Number:	Publication Date:

Comments: _____

_____

_____

_____

_____

_____

Your Name:	Date:
Company Name:	Phone: ( )
Address:	

Thank you for your comments.

Technical Writing Internal Use	
Date:	DIF Number:
Follow-Up Action:	

Rockwell Automation

Artisan Technology Group - Quality Instrumentation ... Guaranteed | (888) 88-SOURCE | www.artisantg.com

Artisan Technology Group - Quality Instrumentation ... Guaranteed | (888) 88-SOURCE | www.artisantg.com

Artisan Technology Group - Quality Instrumentation ... Guaranteed | (888) 88-SOURCE | www.artisantg.com

Rockwell Automation / 24703 Euclid Avenue / Cleveland, Ohio 44117 / (216) 266-7000

Rockwell Automation

Printed in U.S.A. S-3018-1 August 1998

Artisan Technology Group - Quality Instrumentation ... Guaranteed | (888) 88-SOURCE | www.artisantg.com

Artisan Technology Group

Artisan Technology Group is your source for quality new and certified-used/pre-owned equipment

- FAST SHIPPING AND DELIVERY
- TENS OF THOUSANDS OF IN-STOCK ITEMS
- EQUIPMENT DEMOS
- HUNDREDS OF MANUFACTURERS SUPPORTED
- LEASING/MONTHLY RENTALS
- ITAR CERTIFIED SECURE ASSET SOLUTIONS

SERVICE CENTER REPAIRS
Experienced engineers and technicians on staff at our full-service, in-house repair center

InstraView℠ REMOTE INSPECTION
Remotely inspect equipment before purchasing with our interactive website at ***www.instraview.com*** ↗

WE BUY USED EQUIPMENT
Sell your excess, underutilized, and idle used equipment
We also offer credit for buy-backs and trade-ins
www.artisantg.com/WeBuyEquipment ↗

LOOKING FOR MORE INFORMATION?
Visit us on the web at ***www.artisantg.com*** ↗ for more information on price quotations, drivers, technical specifications, manuals, and documentation

Contact us: (888) 88-SOURCE | sales@artisantg.com | www.artisantg.com