Artisan Technology Group

Artisan Technology Group is your source for quality new and certified-used/pre-owned equipment

- FAST SHIPPING AND DELIVERY
- TENS OF THOUSANDS OF IN-STOCK ITEMS
- EQUIPMENT DEMOS
- HUNDREDS OF MANUFACTURERS SUPPORTED
- LEASING/MONTHLY RENTALS
- ITAR CERTIFIED SECURE ASSET SOLUTIONS

SERVICE CENTER REPAIRS
Experienced engineers and technicians on staff at our full-service, in-house repair center

InstraView℠ REMOTE INSPECTION
Remotely inspect equipment before purchasing with our interactive website at ***www.instraview.com*** ↗

WE BUY USED EQUIPMENT
Sell your excess, underutilized, and idle used equipment
We also offer credit for buy-backs and trade-ins
www.artisantg.com/WeBuyEquipment ↗

LOOKING FOR MORE INFORMATION?
Visit us on the web at ***www.artisantg.com*** ↗ for more information on price quotations, drivers, technical specifications, manuals, and documentation

Contact us: (888) 88-SOURCE | sales@artisantg.com | www.artisantg.com

VME BUS

EXTENDED TEMPERATURE PENTIUM® III SBC

VP PSE/P3x-E

APPLICATIONS

The VP PSE/P3x-E is a PC-compatible high performance, long life cycle, one-slot VME-64 single board computer, supporting extended temperature operation. The board supports the low power 0.18 micron Flip-Chip version of Intel®'s Pentium III, and offers a wide variety of features and improved caching. This versatile board is suitable for a range of high-performance applications including industrial control, telecommunications, telemetry, medical, scientific and aerospace systems. Its functionality can be further increased through the use of PMC adapter modules.

To simplify the board's integration many popular industry standard operating systems are supported.

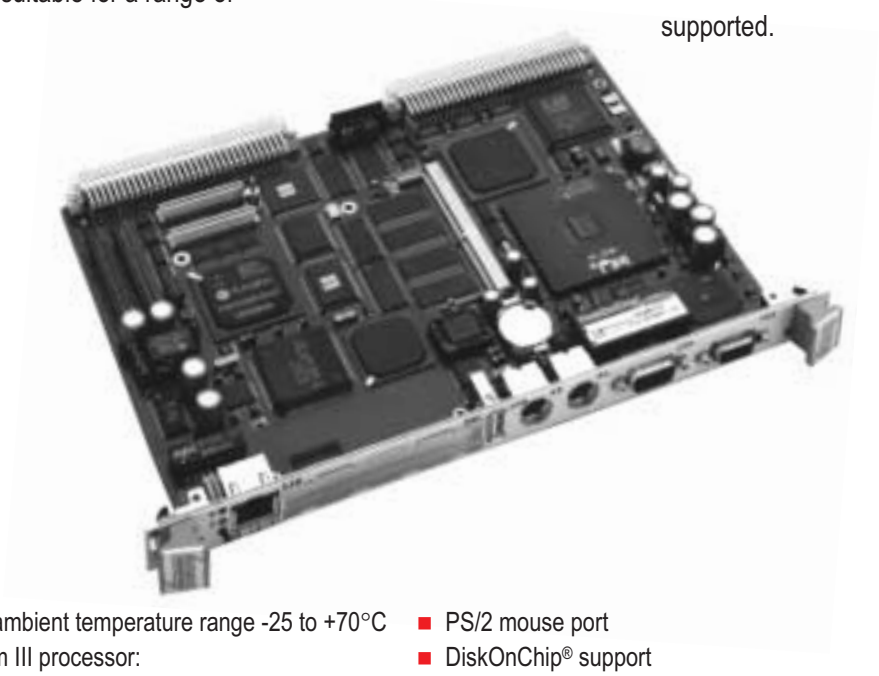

HIGHLIGHTS

- Operation over ambient temperature range -25 to +70°C
- 850MHz Pentium III processor:
  - using PGA370 socket based Flip-Chip
  - 32 Kbytes L1 cache
  - 256 Kbytes L2 cache, 256-bits wide, 8-way associative
  - 100MHz Front Side Bus
  - no CPU fan needed
- Up to 384 Mbytes of Synchronous DRAM
- High performance Ultra-SCSI and/or EIDE interface
- Ethernet 10 Mbps (10Base-T) or 100 Mbps (100Base-Tx) via an RJ45 connector
- High resolution graphics interface with support for flat panel displays
- PMC interface on board
- PC compatible keyboard interface
- PS/2 mouse port
- DiskOnChip® support
- 512 Kbytes of BIOS Flash EPROM
- 1 asynchronous RS232 serial channel
- Floppy disk interface
- 1 Parallel Printer Port (ECP, EPP and IEEE1284)
- Watchdog timer
- Universal Serial Bus (USB)
- Support for VxWorks®, Windows NT®, Windows® 2000, Windows® XP Embedded, LynxOS®, Solaris™, Linux®, QNX®, RTX® and MS-DOS®
- VME-64 Interface supporting A32/A24/A16/D64/D32/D16/D8(EO), MBLT64 and with support for fast hardware byte-swapping
- Single slot
- P2 breakout module supplied

CONCURRENT TECHNOLOGIES

Concurrent Technologies Inc
3840 Packard Road, Suite 130,
Ann Arbor, MI 48108
U. S. A.
Tel: (734) 971 6309
Fax: (734) 971 6350

Concurrent Technologies Plc
4 Gilberd Court, Newcomen Way
Colchester, Essex CO4 9WN,
U. K.
Tel: (+44) 1206 752626
Fax: (+44) 1206 751116

Email: info@gocct.com http://www.gocct.com

Artisan Technology Group - Quality Instrumentation ... Guaranteed | (888) 88-SOURCE | www.artisantg.com

SPECIFICATION

CENTRAL PROCESSOR
- Pentium III operating at 850MHz:-
  - ➔ using a 370-pin FC-PGA (Flip-Chip Pin Grid Array) CPU
  - ➔ 32 Kbytes internal (Level 1) CPU cache
  - ➔ 256 Kbytes of internal secondary (Level 2) Advanced Transfer Cache - full speed, 256-bits wide, 8-way associative
  - ➔ supports 100MHz system bus frequency
  - ➔ utilizes Intel's 82440BX chipset
  - ➔ no CPU fan

DRAM
- supporting up to 384 Mbytes SDRAM:-
  - ➔ 128 Mbytes soldered to board; and,
  - ➔ 128 or 256 Mbytes provided by a 144-pin SODIMM
- 64-bits wide using 3.3 Volt SDRAMs
- accessible from Pentium III, PCI bus and VME

HARD DISK INTERFACES
- Ultra-SCSI 8-bit and Ultra-Wide SCSI 16-bit:-
  - ➔ single-ended asynchronous or synchronous, with active termination and signal negation
  - ➔ utilizing LSI Logic® 53C875 SCSI I/O Processor
  - ➔ synchronous SCSI data rates up to 40 Mbytes/sec
  - ➔ accessed via P2 connector
- EIDE interface:-
  - ➔ accessed via P2 connector
  - ➔ supports Ultra-DMA 33 for high performance drives
- DiskOnChip (optional):-
  - ➔ available via a 32-pin (DIL) dual-in-line socket

ETHERNET INTERFACE
- supports 10Base-T and 100Base-Tx for UTP CAT-5
- implemented by a 21143 LAN Controller
- accessed by an RJ45 front panel connector
- programmable station ID

GRAPHICS INTERFACE
- implemented by an Asiliant Technologies 69030 providing:-
  - ➔ 4 Mbytes video memory
  - ➔ resolutions up to 1600 x 1200
  - ➔ up to 16M colors
  - ➔ flat panel supported via DFP (Digital Flat Panel) interface

PCI EXPANSION INTERFACE FOR PMC
- 1 x PMC slot with I/O via front panel - within a single VME slot
- provides connection to a PMC Carrier Board (which provides 2 PMC slots - these 2 slots are in addition to the on-board PMC)

SERIAL INTERFACE
- 1 x RS232 serial channel
- 16550 compatible UART
- accessed via a 9-pin D-type connector on front panel

OTHER PERIPHERAL INTERFACES
- keyboard interface via PS/2™ type connector on front panel
- mouse interface via PS/2 type connector on front panel
- PC-compatible Real Time Clock
- floppy disk interface via P2 connector
- parallel printer port interface (ECP, EPP and IEEE1284) via P2 connector.
- two USB (Universal Serial Bus) interfaces: one via front panel, other via P2 connector
- Watchdog timer

FLASH EPROM
- 512 Kbytes of BIOS Flash EPROM

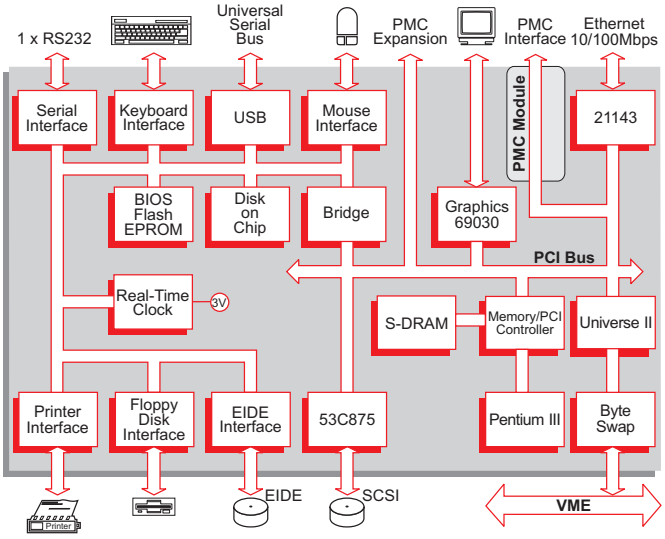

VME INTERFACE
- implemented using Tundra® Universe II™ device
- VME Master/Slave
- A32/A24/A16/D64/D32/D16/D8(EO)/MBLT64
- fast hardware byte swapping
- auto system controller detect
- full interrupter / interrupt handler support
- 4 x 32-bit mailbox registers
- location monitor

FIRMWARE SUPPORT
- PhoenixPICO™ BIOS
- comprehensive Power-On Self-Test (POST)

SOFTWARE SUPPORT
- support for VxWorks, Windows NT, Windows 2000, Windows XP Embedded, LynxOS, Solaris, Linux, QNX, RTX and MS-DOS

ELECTRICAL SPECIFICATION
- all voltages to be within ±5%
- +5V@7.2A (typical for 850MHz with 128 Mbyte DRAM)
- +12V@0.0A; -12V@0.0A
- +12V and -12V routed to PMC Expansion from VME bus

ENVIRONMENTAL SPECIFICATION
- -25°C to +70°C (operating)
- 10% to 90% Relative Humidity, non-condensing (operating)
- -40°C to +70°C (storage)
- 10% to 90% Relative Humidity, non-condensing (storage)

MECHANICAL SPECIFICATION
- 6U form-factor
- single VME slot - front panel width 0.8inch (20.3mm)
- utilizes a 160-way DIN connector for P1 and P2:-
  - ➔ compatible with normal 96-way DIN connectors

ORDERING INFORMATION

Order Number	Product Description (Hardware)
VP PSE/P34-xyE	850MHz Pentium III CPU
AD SBC/PMC-00E	PMC Carrier Board for 2 PMC modules

For details of options/combinations available please contact your local sales office

All companies and product names are trademarks of their respective organizations.
Specification subject to change; E and OE.

© Concurrent Technologies 2002
Datasheet Code 1425/0602

Artisan Technology Group - Quality Instrumentation ... Guaranteed | (888) 88-SOURCE | www.artisantg.com

Artisan Technology Group

Artisan Technology Group is your source for quality new and certified-used/pre-owned equipment

- FAST SHIPPING AND DELIVERY
- TENS OF THOUSANDS OF IN-STOCK ITEMS
- EQUIPMENT DEMOS
- HUNDREDS OF MANUFACTURERS SUPPORTED
- LEASING/MONTHLY RENTALS
- ITAR CERTIFIED SECURE ASSET SOLUTIONS

SERVICE CENTER REPAIRS
Experienced engineers and technicians on staff at our full-service, in-house repair center

InstraView℠ REMOTE INSPECTION
Remotely inspect equipment before purchasing with our interactive website at ***www.instraview.com*** ↗

WE BUY USED EQUIPMENT
Sell your excess, underutilized, and idle used equipment
We also offer credit for buy-backs and trade-ins
www.artisantg.com/WeBuyEquipment ↗

LOOKING FOR MORE INFORMATION?
Visit us on the web at ***www.artisantg.com*** ↗ for more information on price quotations, drivers, technical specifications, manuals, and documentation

Contact us: (888) 88-SOURCE | sales@artisantg.com | www.artisantg.com