Artisan Technology Group

Artisan Technology Group is your source for quality new and certified-used/pre-owned equipment

- FAST SHIPPING AND DELIVERY
- TENS OF THOUSANDS OF IN-STOCK ITEMS
- EQUIPMENT DEMOS
- HUNDREDS OF MANUFACTURERS SUPPORTED
- LEASING/MONTHLY RENTALS
- ITAR CERTIFIED SECURE ASSET SOLUTIONS

SERVICE CENTER REPAIRS
Experienced engineers and technicians on staff at our full-service, in-house repair center

InstraView℠ REMOTE INSPECTION
Remotely inspect equipment before purchasing with our interactive website at ***www.instraview.com*** ↗

WE BUY USED EQUIPMENT
Sell your excess, underutilized, and idle used equipment
We also offer credit for buy-backs and trade-ins
www.artisantg.com/WeBuyEquipment ↗

LOOKING FOR MORE INFORMATION?
Visit us on the web at ***www.artisantg.com*** ↗ for more information on price quotations, drivers, technical specifications, manuals, and documentation

Contact us: (888) 88-SOURCE | sales@artisantg.com | www.artisantg.com

Using the Manual Control Pendant (MCP) C

C.1 Manual Control Pendant Basics

NOTE: If you are using the Adept T1/T2 Pendant with your system, refer to the *Adept T1 Pendant User's Guide* or *Adept T2 Pendant User's Guide* that is supplied with the system for information on operating the pendant.

Adept motion systems are designed to allow control of the robot or motion device from the Manual Control Pendant (MCP). **Figure C-2 on page 128** shows how to hold the MCP. There are two versions of the MCP: the MCP III (also called MCP-3) and the MCP-4.

MCP Enable Switch Function with CAT-3 SmartControllers

NOTE: CAT-3 SmartControllers will have serial numbers starting with 1000-, 2000-, or 2100- (for CS, CX, and CX with AVI, respectively).

Older, non-CAT-3 SmartControllers will have serial numbers starting with 3561- (CS) or 3562- (CX).

When a CAT-3 SmartController system is operating in Auto Mode, the Enable Switch on the MCP has no effect on the operation. This means in Auto mode, the Enable switch does not have to be pressed to enable High Power, and releasing the Enable switch while running will not turn off High Power. This is true for both the MCP-3 and MCP-4 models.

See **Section 1.7 on page 22** for more information on the CAT-3 SmartController.

CAUTION: The new functionality of the MCP Enable switch in Auto Mode must be recognized by persons familiar with older Adept systems, and working patterns and habits adjusted accordingly.

MCP Enable Switch Function with Earlier (Pre-CAT-3) SmartControllers

The MCP III has a palm-activated Enable switch that is connected to the remote emergency-stop circuitry of the controller. When this switch is released in Automatic mode, High Power is removed from the motion device. When the MCP is not being used, the operator must place it in the special cradle provided or remove it from the controller and install the pendant jumper plug. The cradle retaining clip will keep the Enable switch depressed when the pendant is not in use. **Figure C-3 on page 128** shows how to place the pendant in its cradle.

Artisan Technology Group - Quality Instrumentation ... Guaranteed | (888) 88-SOURCE | www.artisantg.com

To operate the MCP, put your left hand through the opening on the left-hand side of the pendant and use your left thumb to operate the pendant speed bars. Use your right hand for all the other function buttons. The various button groupings of the pendant are reviewed in this section.

MCP-4

The MCP-4 has the same functionality as the MCP III, except that it has a 3-position enable switch and a dual-channel E-Stop circuit. The 3-position enable switch provides additional safety for the operator. See the following section for a description of the enable switch.

3-Position Enable Switch

The 3-position enable switch on the MCP-4 works as follows (see **Figure C-1**):

Position 1 - switch is not pressed, high power cannot be enabled. (Switch is open.)

Position 2 - switch is pressed in to the middle position, high power can be enabled. (Switch is closed.)

Position 3 - switch is pressed in past the middle position, high power is removed. (Switch is open.)

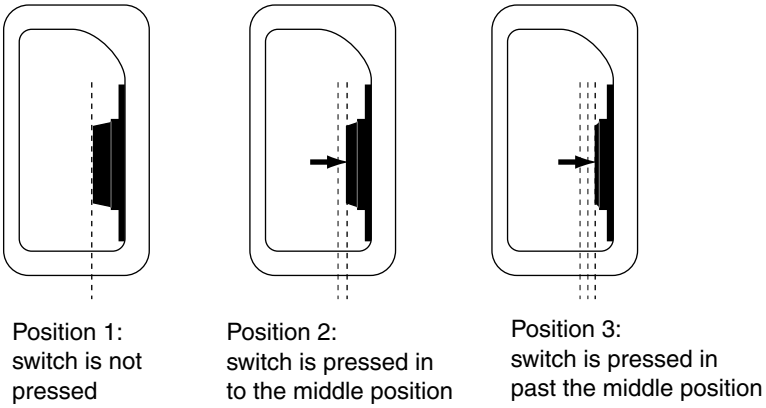

Figure C-1. 3-Position Enable Switch on MCP-4

Artisan Technology Group - Quality Instrumentation ... Guaranteed | (888) 88-SOURCE | www.artisantg.com

MCP-4 Compatibility

The MCP-4 has a dual-channel (four-wire) E-Stop circuit in which the switch contacts are in parallel. This is different from the MCP III, in which the switch contacts are in series. This difference affects how the MCP-4 is used in various Adept systems. **Table C-1** covers the compatibility status for the MCP-4.

Table C-1. MCP-4 Compatibility Guidelines

In Adept systems rated for Category 1 Safety	
In MV Controller-based systems with CIP2, CIP1, or VFP	MCP-4 is compatible, there are no issues.
In SmartController-based systems	In systems that are shipped from the factory with an MCP-4, there are no compatibility issues. If you are installing an MCP-4 in a system that originally used an MCP III, then Adept recommends removing 10356-10370, CIM TO MCPIII Adapter for reliability, but not for compliance reasons.
In Adept systems rated for Category 3 Safety (CE: Redundant Channel, RIA: Control Reliable)	
In MV Controller-based systems with CIP2 or CIP1	To maintain a dual contact enable in CE Category 3 Emergency Stop systems, remove jumper JP3 inside CIP.
In MV Controller-based systems with VFP3	MCP-4 not compatible. Cannot maintain a dual contact enable with the MCP-4, must use MCP III.
In SmartController-based systems	In systems that are shipped from the factory with an MCP-4, there are no compatibility issues. If you are installing an MCP-4 in a system that originally used an MCP III, then you must remove 10356-10370, CIM TO MCPIII Adapter. This must be done for compliance reasons in order to maintain a dual contact enable in CE Category 3 Emergency Stop systems.

Artisan Technology Group - Quality Instrumentation ... Guaranteed | (888) 88-SOURCE | www.artisantg.com

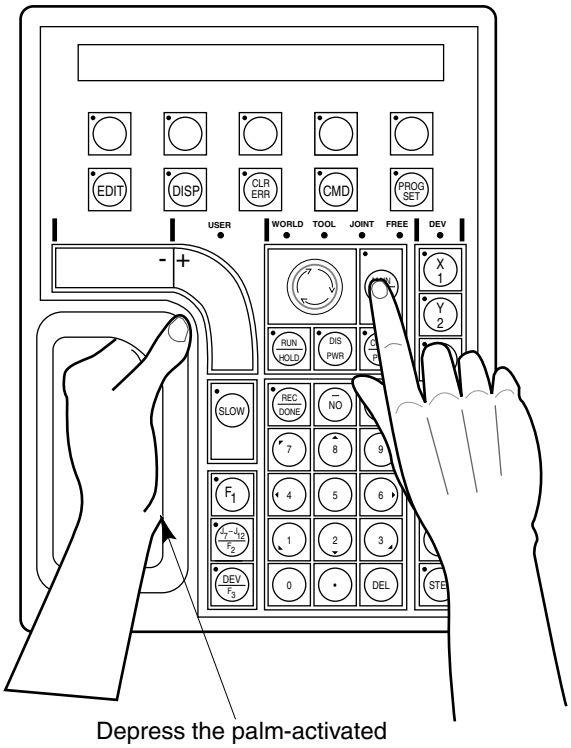

Figure C-2. Holding the MCP

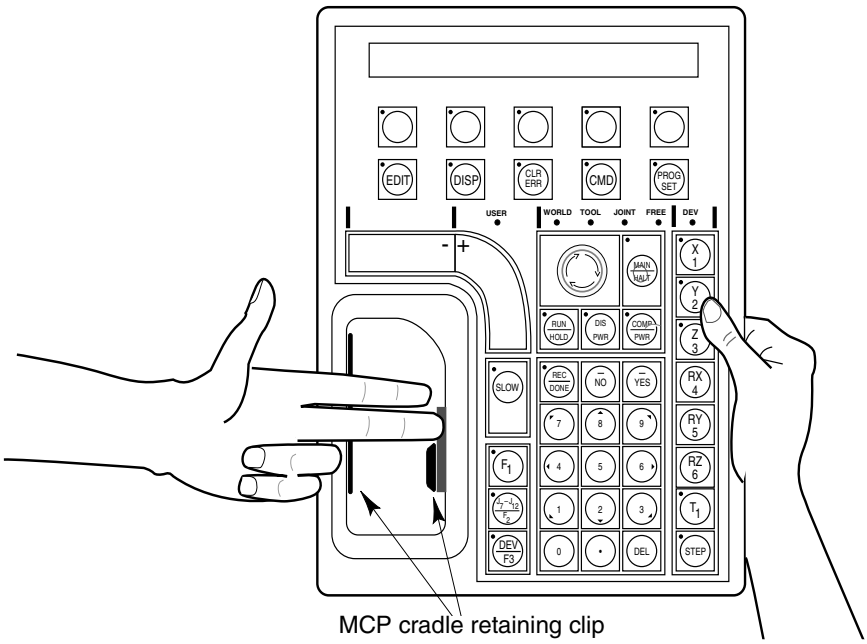

Figure C-3. Cradling the MCP

Artisan Technology Group - Quality Instrumentation ... Guaranteed | (888) 88-SOURCE | www.artisantg.com

WARNING: The cradle for the pendant MUST be mounted outside of the robot or motion device work envelope.

Connecting the MCP

The MCP connects to the XMCP connector on the front of the controller.

- For an MCP-3, install the MCP adapter cable and the MCP-3 dongle between the MCP and the controller.
- For an MCP-4, install the MCP adapter cable between the MCP and the controller. The dongle is not required for the MCP-4.

The pendant emergency-stop switch and the palm-activated Enable switch are wired into the emergency-stop circuitry. Therefore, either the pendant or the optional pendant jumper plug must be attached to this connector. If neither one is connected, you cannot enable High Power. If the pendant or jumper plug is removed, High Power is turned off.

CAUTION: Do not modify or extend the MCP cable. Doing this will void the warranty on the MCP.

WARNING: The Auto/Manual keyswitch on the Adept Front Panel *must* be set to Manual if the MCP is to be used inside the robot workcell. This enables important safety features to protect the operator by limiting the speed of the robot.

Artisan Technology Group - Quality Instrumentation ... Guaranteed | (888) 88-SOURCE | www.artisantg.com

MCP Layout

The major areas of the MCP are shown in the following figure:

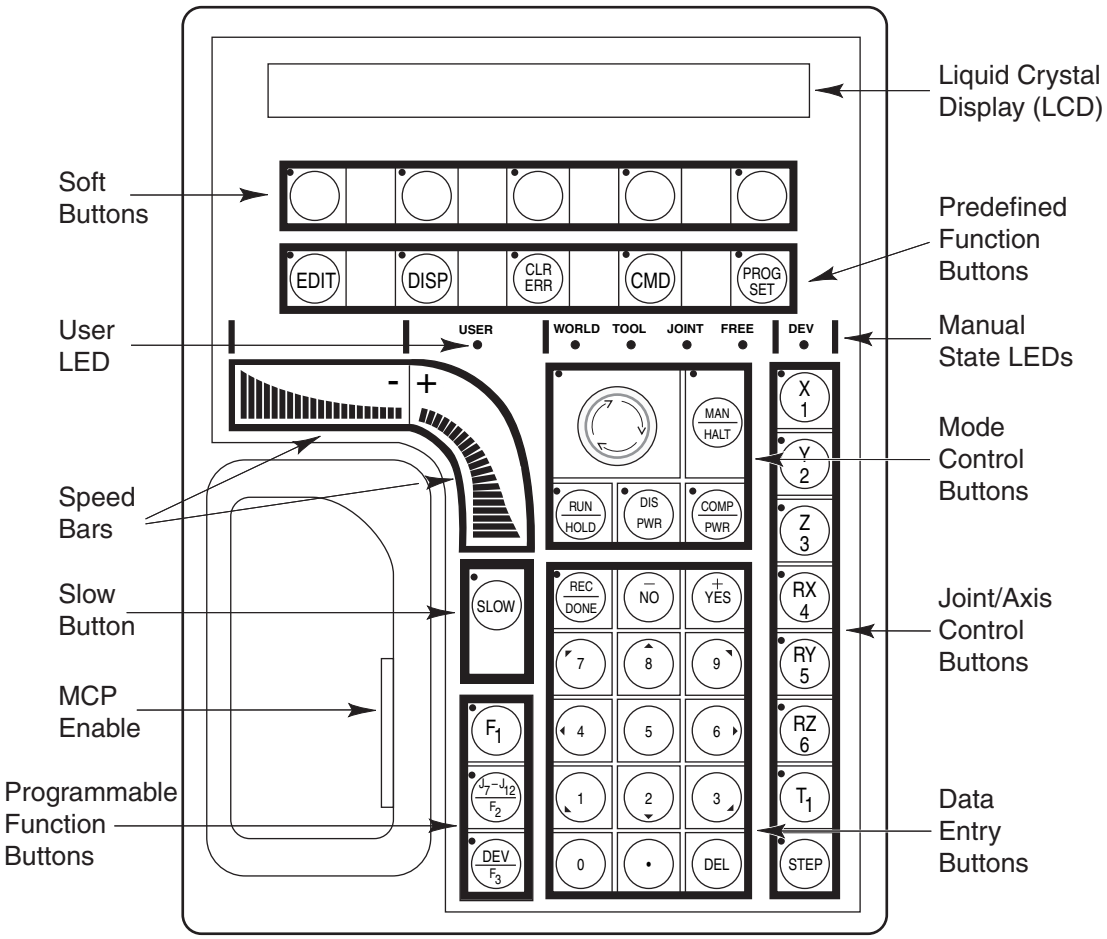

Figure C-4. MCP Layout

Soft Buttons

The soft buttons have different functions depending on the application program being run, or the selection made from the predefined function buttons. Whenever a soft button is active, its function is shown on the bottom line of the pendant display. Because these buttons do not have fixed labels (the labels are defined by the program using the buttons), they are referred to as soft buttons. (Programming the MCP is covered in the *V+ Language User's Guide*.) **Figure C-4** shows the soft buttons.

Predefined Function Buttons

The predefined function buttons have specific, system-wide functions assigned to them. These functions are covered in **"MCP Predefined Functions" on page 133**.

Artisan Technology Group - Quality Instrumentation ... Guaranteed | (888) 88-SOURCE | www.artisantg.com

Programmable Function Buttons

The programmable function buttons are used in custom application programs, and their functions will vary depending upon the program being run. See the documentation for your application programs for details on these buttons. **Figure C-4** shows the function buttons.

Data Entry Buttons

The data entry buttons shown in the following figure are used to input data, normally in response to prompts that appear on the pendant display. The data entry buttons include, +/YES, –/NO, DEL, the numeric buttons (0-9), the decimal point, and the REC/DONE button. These buttons are similar to the numeric keypad on a standard keyboard.

REC/DONE Button Behaves like the Return or Enter key on a standard keyboard. When data entry is complete, pressing REC/DONE sends the entry to the controller. In many cases, application programs have users press the REC/DONE button to signal that they have completed a task.

DEL Button Acts like the backspace key on a standard keyboard. When data is being entered, it will appear on the pendant display. DEL will delete any characters that appear on the pendant display but have not been entered using the REC/DONE button. Application programs may also assign special functions to the DEL button.

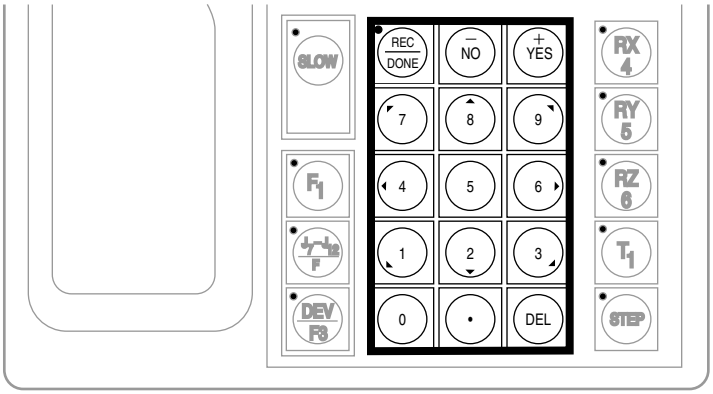

Figure C-5. Data Entry Buttons

Mode Control and Joint/Axis Control Buttons

The mode control and joint/axis control buttons are used to control the robot from the pendant. The use of these buttons is covered in **"Moving a Robot or Motion Device with the MCP" on page 140**.

Speed Bars and Slow Button

The speed bars and slow button are used primarily to move the robot when it is in Manual mode. These options are described in **"Moving a Robot or Motion Device with the MCP" on page 140**.

In some cases, application programs will make special use of the speed bars. See the documentation for any application program for details on how it uses these buttons.

Artisan Technology Group - Quality Instrumentation ... Guaranteed | (888) 88-SOURCE | www.artisantg.com

Emergency Stop From the MCP

To immediately halt program execution and turn off High Power, press the emergency stop switch on the MCP. This switch has the same effect as pressing the emergency stop switch on the Front Panel.

To re-enable High Power after pressing the MCP emergency stop switch, follow this process:

1. Turn the emergency stop switch to the right (clockwise). The switch is spring loaded and will return to its normal position.
2. Depress the Enable switch. High Power can now be re-enabled by pressing the COMP/PWR button (mode control group), or by entering the ENABLE POWER command from the keyboard.
3. Press the blinking High Power button on the Front Panel (or CIP2 in an MV controller system). High Power is enabled.

Re-Enabling Power after Enable Switch Released

In Automatic Mode

Original SmartController

When the system is operating in Automatic Mode and you release the Enable switch (or go to position 3 in the 3-position switch), the system turns off the same as an E-Stop condition. To re-enable high power, you must follow the steps from the previous section.

CAT-3 SmartController

In a CAT-3 SmartController, when operating in Automatic Mode, the Enable switch is ignored by the system. Releasing the Enable switch has no effect on operation. See **Section 1.7 on page 22** for more information.

In Manual Mode

When the system is operating in Manual Mode and you release the Enable switch (or go to position 3 in the 3-position switch), the system turns off in a controlled manner. This puts the system in a different state than when the E-Stop button is pressed. To re-enable high power, follow this process:

Depress the Enable switch. High Power can now be re-enabled by pressing the COMP/PWR button (mode control group), or by entering the ENABLE POWER command from the keyboard. High Power is enabled. This makes it more convenient during development and when programming a system.

NOTE: The exception to this situation is when a CAT-3 SmartController is used in a system with a PDU-2 or PDU-3. With these systems, you have to press the blinking High Power button on the Front Panel. **See "Operational Change in SmartModule Systems" on page 24.**

Artisan Technology Group - Quality Instrumentation ... Guaranteed | (888) 88-SOURCE | www.artisantg.com

Background Mode

The pendant is in background mode when the USER LED is not lit and none of the predefined functions are being used. The USER LED is lit whenever an application program is making use of the MCP. The MCP will not return to background mode until the program completes execution or is aborted. The LEDs above the predefined function buttons indicate whether the functions are being used. If one of the LEDs is lit, the MCP can be returned to background mode by pressing the REC/DONE key (more than one press may be necessary). The predefined functions are described in the following section.

When the MCP is in background mode, the viewing angle of the LCD can be changed. There are three different angles. Press the ‘2’, ‘5’, or ‘8’ button to select a different viewing angle.

C.2 MCP Predefined Functions

Introduction

This section describes the manual control pendant functions related to:

- Loading and starting programs
- Editing global variables
- Displaying system status

Predefined Function Buttons

The MCP has five predefined function buttons for your use. They are listed and explained below.

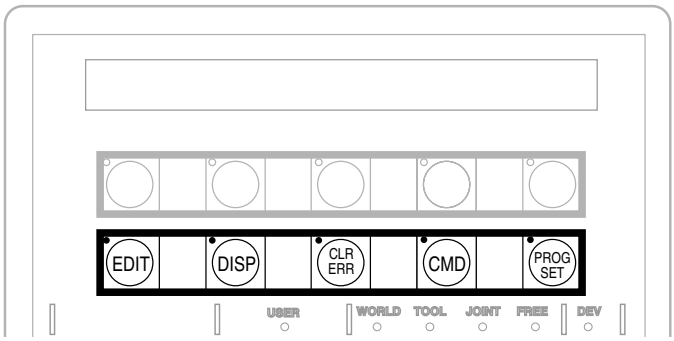

Figure C-6. MCP Predefined Function Buttons

Artisan Technology Group - Quality Instrumentation ... Guaranteed | (888) 88-SOURCE | www.artisantg.com

The Edit Function

The Edit function button allows editing of location variables and real variables that are used by V+ programs.

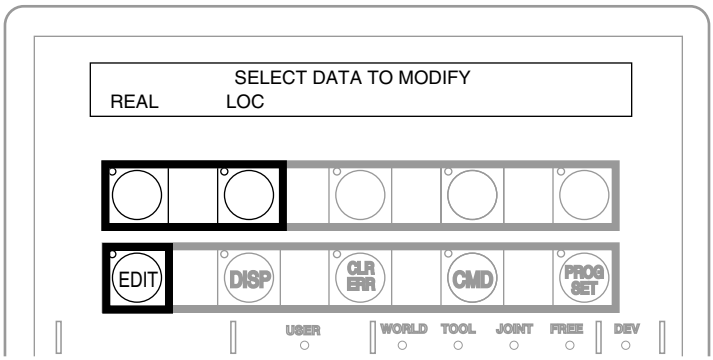

Figure C-7. EDIT Function Button

REAL Press the REAL soft button and the LCD displays:

```
SELECT REAL VARIABLE TO EDIT
var1    var2    var3    var4    <MORE>
```

var1, var2, etc., are global variable names. Press the soft button under the variable name to edit that variable. The <MORE> soft button is shown only when there are more than five global real variables in system memory. When a variable has been selected, the LCD will display:

```
var.name = xxx
CHANGE    TRUE    FALSE
```

(If the variable being edited is an element of an array, an additional soft button is displayed that allows you to specify the index of the variable to edit.)

Press the TRUE soft button to set the variable to the boolean value of true (–1). Press FALSE to set the variable to false (0). To change the value of the variable, press the CHANGE soft button. The LCD displays:

```
var.name = _
CHANGE    TRUE    FALSE
```

The typing cursor replaces the variable value. Use the data entry buttons to input a new value, and complete the entry by pressing REC/DONE.

LOC Press the LOC soft button and the LCD displays:

```
SELECT LOCATION VARIABLE TO EDIT
loc1    loc2    loc3    loc4    <MORE>
```


Artisan Technology Group - Quality Instrumentation ... Guaranteed | (888) 88-SOURCE | www.artisantg.com

Press the soft button under the variable name to edit that variable. The <MORE> soft button is shown only when there are more than five global location variables in system memory. When a variable has been selected, the LCD will show:

```
loc.name: X = 500

CHANGE     NEXT     HERE
```

(If the variable being edited is an element of an array, an additional soft button is displayed that allows you to specify the index of the variable to edit.)

If a precision point is selected, the LCD will show:

```
#loc.name: Jt1 = -210

CHANGE     NEXT     HERE
```

Press the CHANGE soft button to change the displayed component of the location variable. The value will disappear and be replaced with the typing cursor. Use the data entry buttons to enter a new value, and complete the entry by pressing REC/DONE.

Press the NEXT soft button to show the next component of the location variable. The location's X, Y, Z, y, p, and r values will be shown in succession. X, Y, and Z values are given in millimeters; y, p, and r values are given in degrees. If a precision point is being edited, the joint values for all the joints in the robot will be shown in succession.

Press the HERE soft button to record the current robot location in the variable being edited.

WARNING: Be extremely careful when changing location values. When the robot moves to a modified location, it could damage equipment in the workcell.

The Display Function

The Display function button allows either the current joint values, the current world location, the system status, the digital I/O status, or the last error message to be displayed on the MCP.

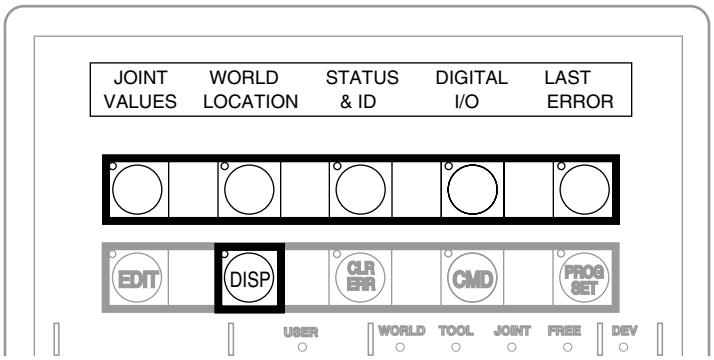

Figure C-8. DISPLAY Function Button

Artisan Technology Group - Quality Instrumentation ... Guaranteed | (888) 88-SOURCE | www.artisantg.com

Joint Values When this button is pressed, the display shows:

```
J1 = x.xx    J2 = x.xx    J3 = x.xx

J4 = x.xx    J5 = x.xx    J6 = x.xx
```

These values represent the current joint positions of the robot or motion device. Values will be shown only for joints the robot or motion device actually has. Rotational joint values are expressed in degrees, and translational joint values are expressed in millimeters.

WORLD LOCATION When this button is pressed, the display shows:

```
X = xxx.xxmm     Y = xxx.xxmm     Z = xxx.xxmm

y = xxx.xx°      p = xxx.xx°      r = xxx.xx°
```

The values represent the current location of the robot or motion device in world coordinates. See **Section C.3 on page 140** for details on world coordinates.

Status & ID When this button is pressed, the display shows:

```
Status     SOFTWARE     CNTRLR       ROBOT

           ID           ID           ID
```

The Status button displays:

```
program.name     50         1        0

Program        Speed      Cycle    Left
```

Program shows the name of the currently executing or most recently executed program. Speed shows the current monitor speed. Cycle shows the total number of cycles specified when the program was executed. Left shows the number of cycles of the program remaining to execute.

The Software, Controller, and Robot ID buttons display the ID information for those items.

Digital I/O When this button is pressed, the display shows:

```
---- ---- ---- ---- ---- ---- 0000 0011

 + 0032-0001 -        OUT      IN     SOFT
```

The top line shows the status of the range of digital I/O signals indicated on the second line (1-32 in the above example). A '–' indicates the channel is not installed, a '1' indicates the signal is on, and a '0' indicates the signal is off. The type of signal that is being displayed is indicated by the LED on the soft buttons labeled OUT, IN, and SOFT. The above example shows digital output signals in the range 1 to 32. Signals 1-2 are on, signals 3-8 are off, and no other signals in this range are installed. See **Section 3.8 on page 59** for more information on digital I/O signal ranges.

To display a different range of signals, press the soft buttons under the '+' or '–' labels. The next or previous range of signals will be displayed. Press the OUT, IN, and SOFT soft buttons to display input, output, or soft signal ranges.

Artisan Technology Group - Quality Instrumentation ... Guaranteed | (888) 88-SOURCE | www.artisantg.com

Last Error Press LAST ERROR to display the error messages generated by V+ during the current session. The most recent error will be displayed. The right-most soft button will be labeled <MORE>. Pressing this button will cycle back through the error messages generated during the current session.

The Clear Error Function

If the MCP is in the Manual position, or the system switch MCP.MESSAGES is enabled, error messages are sent to the MCP. When an error is sent to the MCP, the MCP will beep, display a blinking error message, and light the LED on the CLR ERR button, shown in **Figure C-9**.

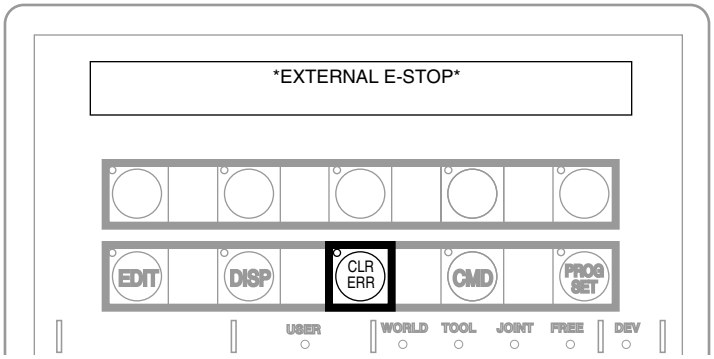

Figure C-9. CLEAR ERROR Function Button

The CLR ERR button must be pressed for operation to continue. Pressing the CLR ERR button will clear the error message from the display and return the MCP to the state it was in before the error.

The CMD Function

The CMD function button displays the options AUTO START, CALIBRATE, STORE ALL, CMD1, and CMD2, as shown in the following figure.

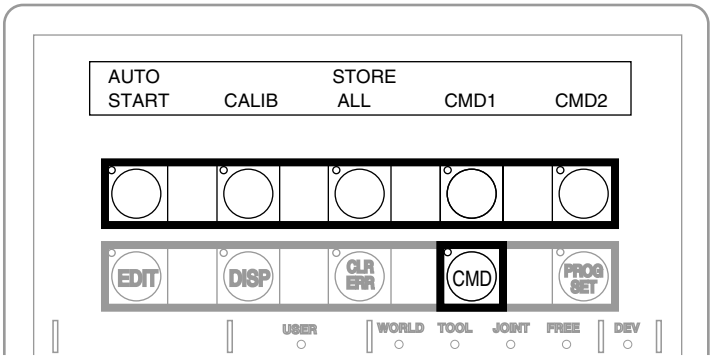

Figure C-10. Command (CMD) Function Button

Artisan Technology Group - Quality Instrumentation ... Guaranteed | (888) 88-SOURCE | www.artisantg.com

The AUTO START, CALIB, CMD1, and CMD2 functions require the MCP to be in Auto mode. If one of these function buttons is pressed while the MCP is in Manual mode, the MCP prompts you to place the keyswitch in the Auto position. The operation is halted and you must press the function button again. The programs started by these buttons may include a WAIT.START instruction, in which case the program will pause and the MCP will display START and CANCEL buttons over the two right soft buttons. Pressing START allows the program to continue. Pressing CANCEL halts program execution.

The programs started by these functions run in task 0. Therefore, High Power must be enabled and the robot must be calibrated.

Auto Start When AUTO START is pressed, the pendant display shows:

```
Enter last two digits of file name:

auto_
```

Enter one or two digits and press REC/DONE. The system attempts to load the file AUTOxx.V2 from the default disk, and COMMAND the program “autoxx” (xx refers to the digits you entered). The program file AUTOxx.V2 must reside on the default disk, and it must contain a monitor command program named “autoxx”. If the file does not exist, or does not contain a correctly named program, the operation will be aborted and the appropriate error message will be displayed on the LCD. For example, if you had entered ‘9’, the system would attempt to load the file AUTO9.V2 and COMMAND the program “auto9”.

Calib When CALIB is pressed, the robot calibration procedure begins (High Power must be enabled).

Store All When STORE ALL is pressed, the pendant displays:

```
Enter last two digits of file name:

STORE auto_
```

Enter one or two digits, press REC/DONE, and all programs and variables in system memory will be stored to a file on the default disk with the name autoxx.v2. For example, if you had entered ’11’, the file AUTO11.V2 would be created, and all programs and global variables in system memory would be stored to that file.

CMD1 and CMD2 When CMD1 is pressed, the system attempts to load the file CMD1.V2 from the default disk, and COMMAND the program CMD1. The program file CMD1.V2 must reside on the default disk, and it must contain a command program named “cmd1”. If the file does not exist, or does not contain a correctly-named program, the operation will be aborted and the appropriate error message will be displayed on the LCD. If CMD2 is pressed, the file CMD2.V2 will be loaded and “cmd2” will be COMMANDed.

Artisan Technology Group - Quality Instrumentation ... Guaranteed | (888) 88-SOURCE | www.artisantg.com

Prog Set Function

Using the Prog Set button, you may select a new program to execute, set the starting step number, set how many cycles of the program to perform, set the monitor speed, and start a memory-resident application program. See the following figure.

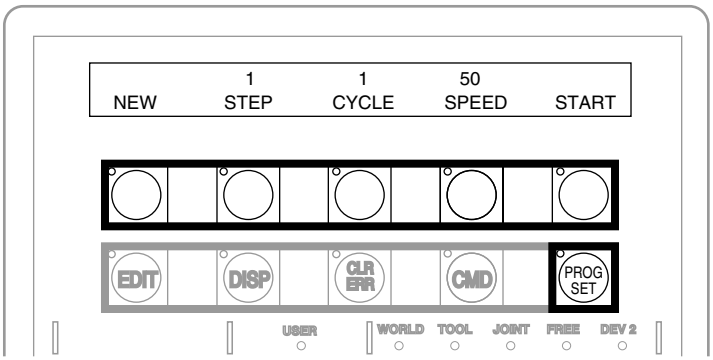

Figure C-11. Program Set Function Button

New Press the NEW soft button and the LCD displays:

```
                SELECT A NEW PROGRAM

prog1      prog2      prog3      prog4      <MORE>
```

To select a different program, press the soft button under the program name. To see additional programs (if there are more programs), press the <MORE> soft button.

Step Press STEP and the step number will blink, and the typing cursor will appear next to the step number. Use the data entry buttons to enter the program step to start execution. Complete the entry by pressing REC/DONE.

Cycle Press CYCLE and the cycle count will blink, and the typing cursor will appear next to the cycle count. Use the data entry keys to enter the number of program cycles to execute. Complete the entry by pressing REC/DONE.

Speed Press SPEED and the current monitor speed will blink, and the typing cursor will appear next to the monitor speed. Use the data entry keys to enter a new monitor speed. Complete the entry by pressing REC/DONE.

Start The START button works only when High Power is enabled (this option cannot be used with DRY.RUN enabled). Press START and the program displayed above the NEW soft button will begin execution.

Artisan Technology Group - Quality Instrumentation ... Guaranteed | (888) 88-SOURCE | www.artisantg.com

C.3 Moving a Robot or Motion Device with the MCP

Introduction

The MCP is used with a robot or motion device primarily to teach robot locations for use in application programs. The MCP is also used with custom applications that employ teach routines that pause execution at specified points and allow an operator to teach or reteach the robot locations used by the program. The Adept AIM software system makes extensive use of the pendant for teaching robot locations.

When you move the robot using the MCP, motion will be in world state, tool state, joint state, or in free state.

When moving in world state, directions are sent from the MCP to move the robot in a Cartesian coordinate system centered at the base of the robot. When moving in tool state, directions are sent from the MCP to move the robot in a Cartesian coordinate system centered at the robot's end-of-arm tooling location.

In joint state, directions are sent from the MCP to move individual robot joints. In free state, selected joints of the robot are "freed" from servo control so they can be moved by hand. Free state is not available for Adept Viper or AdeptSix robots. Free state and joint state are not available for Adept Quattro robots.

Mode Control Buttons

The mode control buttons, shown in the following figure, change the state being used to move the robot, switch control of the robot between the MCP and application programs, and enable High Power (when necessary).

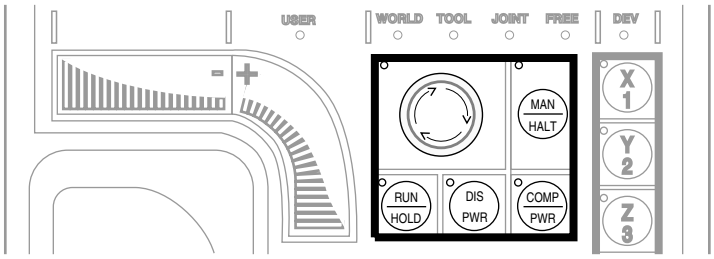

Figure C-12. Mode Control Buttons

Artisan Technology Group - Quality Instrumentation ... Guaranteed | (888) 88-SOURCE | www.artisantg.com

Emergency Stop Switch

The emergency-stop switch will stop program execution and turn off High Power. If your robot is equipped with brakes, they will be activated.

COMP/PWR Button

If high power is enabled, the COMP/PWR button selects computer mode. If the system is in AUTO mode and high power is disabled, the COMP/PWR button enables high power and selects Computer mode. In Computer mode, an executing program or the system terminal has control of the robot. (If the robot has not been calibrated and high power is turned on, the MCP emergency stop switch LED will be lit, and both the COMP/PWR and MAN/HALT LEDs will be off.)

After you press the COMP/PWR button to enable high power, the Front Panel High Power lamp begins blinking and the LCD prompts you to press the High Power button. You must press this button within the allowed time (this time is programmable) or high power will not be enabled.

If the system is in Manual mode and you press the COMP/PWR button to enable High Power, you need to take the following actions:

- Release the MCP enable switch
- Press and hold the MCP enable switch (position 2 on MCP-4)
- Press the Front Panel High Power button within the allowed time

MAN/HALT Button

When there is no program executing, or a program has paused for a pendant teach routine, pressing the MAN/HALT button selects Manual mode. In Manual mode, the MCP has control of the robot. If a program is executing, the MAN/HALT button will stop program execution (without shutting off high power).

Manual mode cannot be entered if high power is off (E-Stop button LED not illuminated). To enable high power, press the COMP/PWR button. The MCP is in Manual mode when:

1. The LED on the MAN/HALT button is illuminated, and
2. One of the manual state LEDs is also illuminated (the manual state LEDs indicate the type of manual motion that has been selected, either World, Tool, Joint, or Free).

The system will remain in Manual mode until High Power is turned off or the COMP/PWR button is pressed. When you have finished moving the robot manually, press the COMP/PWR button to return control to the controller. If a program attempts to execute while the MCP is in Manual mode, the error “Comp mode disabled” will be generated.

When the MAN/HALT button is pressed the first time, the MCP will be in World state. Pressing the MAN/HALT button again selects the next state (Tool, Joint, Free), eventually wrapping back to World state. If Manual mode is terminated and reentered (without turning off system power), the last active state is selected.

Artisan Technology Group - Quality Instrumentation ... Guaranteed | (888) 88-SOURCE | www.artisantg.com

DIS PWR Button

The Disable Power button will shut down high power to the robot or motion device when pressed. Unlike the emergency-stop switch, the Disable Power Button initiates a controlled stop, where the robot is decelerated under software control. After the robot has stopped, power is turned off.

RUN/HOLD

When the RUN/HOLD button is initially pressed, it will stop the robot and pause the executing program (task 0). If you then press and hold down the button, the program proceeds until the button is released. When the button is released, the robot stops and the executing program pauses until the button is pressed again.

Joint/Axis Control Buttons

The buttons on the far right side are the joint/axis control buttons. When the MCP is in Manual mode, these buttons select which robot joint will move, or the coordinate axis along which the robot will move. The X/1, Y/2, Z/3, RX/4, RY/5, and RZ/6 buttons are covered starting on **page 144**. (The MCP must be in Manual mode before a joint/axis control button can be selected.)

STEP Button

When the Auto/Manual keyswitch is set to Manual, V+ programs cannot initiate motions unless you press the step button and speed bar on the MCP. To continue the motion once it has started, you can release the step button but must continue to press the speed bar. Failure to operate the step button and the speed bar properly results in the following error message:

```
*Speed pot or STEP not pressed*
```

Once a motion has started in this mode, releasing the speed bar also terminates any belt tracking or motion defined by an ALTER program instruction.

Motions started in this mode have their maximum speeds limited to those defined for manual control mode.

As an additional safeguard, when high power is enabled and the keyswitch is set to Manual, the MCP is set to off mode, not COMP or Manual mode.

Programs designed to move the robot in Manual mode should read the status of the step and speed bar before starting the move. The program should prompt the user as required.

Artisan Technology Group - Quality Instrumentation ... Guaranteed | (888) 88-SOURCE | www.artisantg.com

Speed Bars

In World, Tool, and Joint Mode

The speed bars are used to control the robot's speed and direction. The joint(s) that will move when the speed bars are pressed depends on the state selected with the MAN/HALT button. Press the speed bars with your left thumb. Pressing the speed bars near the outer ends will move the robot faster; pressing the speed bar near the center will move the robot slower. See page 144 for details on positive and negative directions.

In Comp Mode

See the description of the Step Button on page 142.

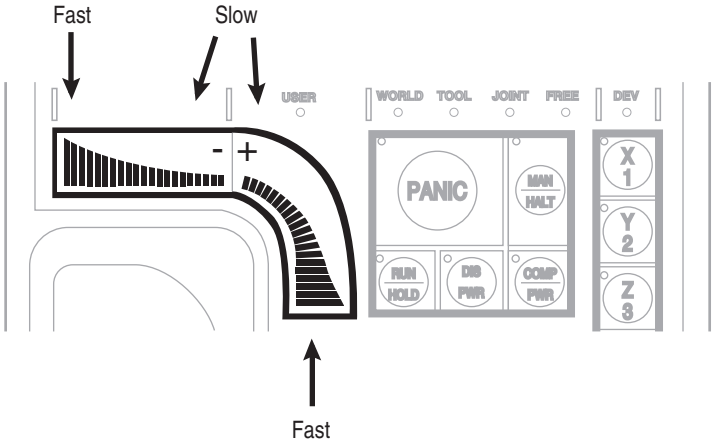

Figure C-13. Speed Bars

Slow Button

The slow button selects between the two different speed ranges of the speed bars. When the slow button LED is lit, the slower speed range is selected. This slower speed is 25% of the normal speed bar speed.

Artisan Technology Group - Quality Instrumentation ... Guaranteed | (888) 88-SOURCE | www.artisantg.com

Robot States

World State

When World state is selected, movement in the X, Y, or Z direction is parallel to an axis of the World coordinate system. Before the speed bars will move the robot, an axis of motion must be selected from the manual control buttons. The World coordinate system for a SCARA robot is shown in the following figure. If X1 is selected, pressing the '+' speed bar will move the robot tool flange in the positive X direction. Pressing the '–' speed bar will move the flange in the negative X direction.

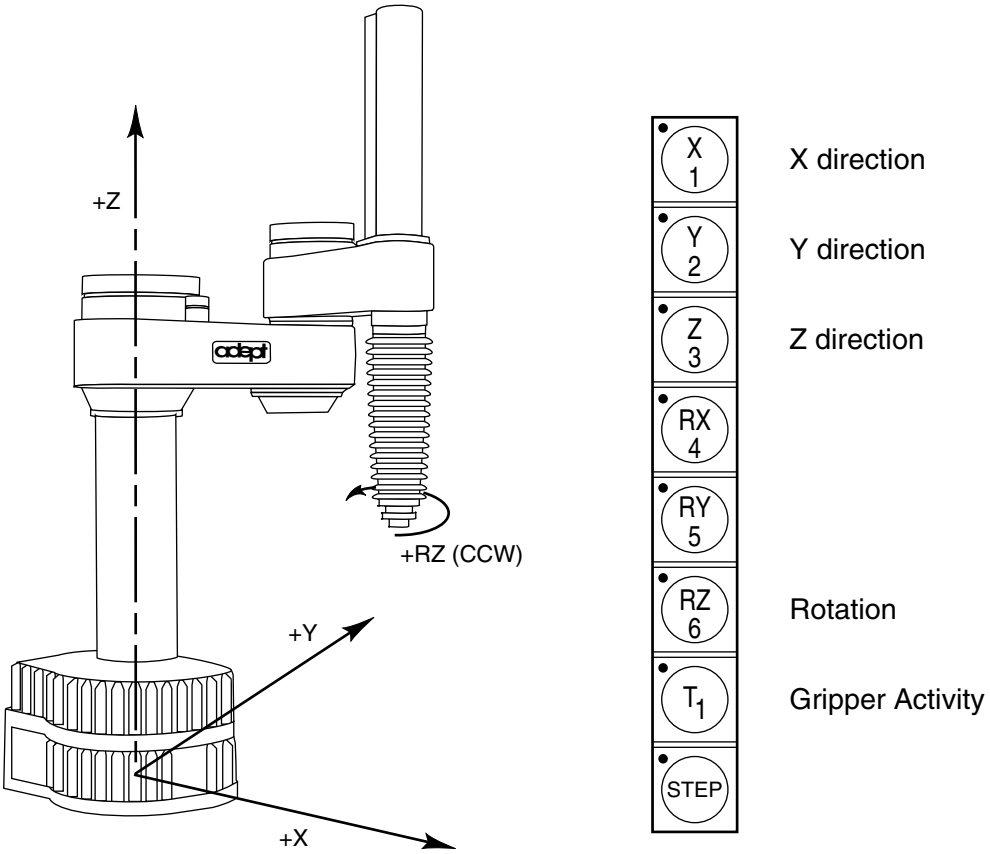

Figure C-14. WORLD State (Four-Axis SCARA)

The T_1 button cycles the gripper solenoids. Press anywhere on the '+' side of the speed bar to open the gripper, on the '–' side to close the gripper.

> **NOTE:** This is the most common gripper setup. The gripper solenoids may be configured so they operate differently (or they may not be configured at all). Place your robot in a safe location and cycle the gripper to verify which side of the speed bar opens the gripper. (The SPEC utility is used to configure gripper activity. See the *Instructions for Adept Utility Programs*.)

Artisan Technology Group - Quality Instrumentation ... Guaranteed | (888) 88-SOURCE | www.artisantg.com

Tool State

When Tool state is selected, movement in the X, Y, or Z direction is along an axis of the Tool coordinate system. The Tool coordinate system is centered at the robot tool flange with the Z axis pointing away from the flange. On most robots, the positive X axis is aligned with the center of the tool flange keyway. Before the speed bars will move the robot, an axis of motion must be selected from the manual control buttons. If X1 is selected, pressing the '+' speed bar will move the robot tool flange in the positive X direction. Pressing the '–' speed bar will move the flange in the negative X direction.

In a four-axis robot, positive rotation of the gripper (RZ) is clockwise as viewed from above. **Figure C-15 on page 146** shows the tool coordinate system for a four-axis SCARA robot.

Figure C-16 on page 147 shows the Tool coordinate system on a six-axis robot.

> **NOTE:** **Figure C-15** and **Figure C-16** are drawn with the assumption that the TOOL transformation is set to NULL (all values are 0). If a TOOL transformation is in effect, the Tool coordinate system will be offset and rotated by the value of the TOOL transformation. Any motion in Tool state will now be relative to the offset coordinate system, and not the center of the tool flange. See the ***V+ Language Reference Guide*** for details on TOOL transformations.

Artisan Technology Group - Quality Instrumentation ... Guaranteed | (888) 88-SOURCE | www.artisantg.com

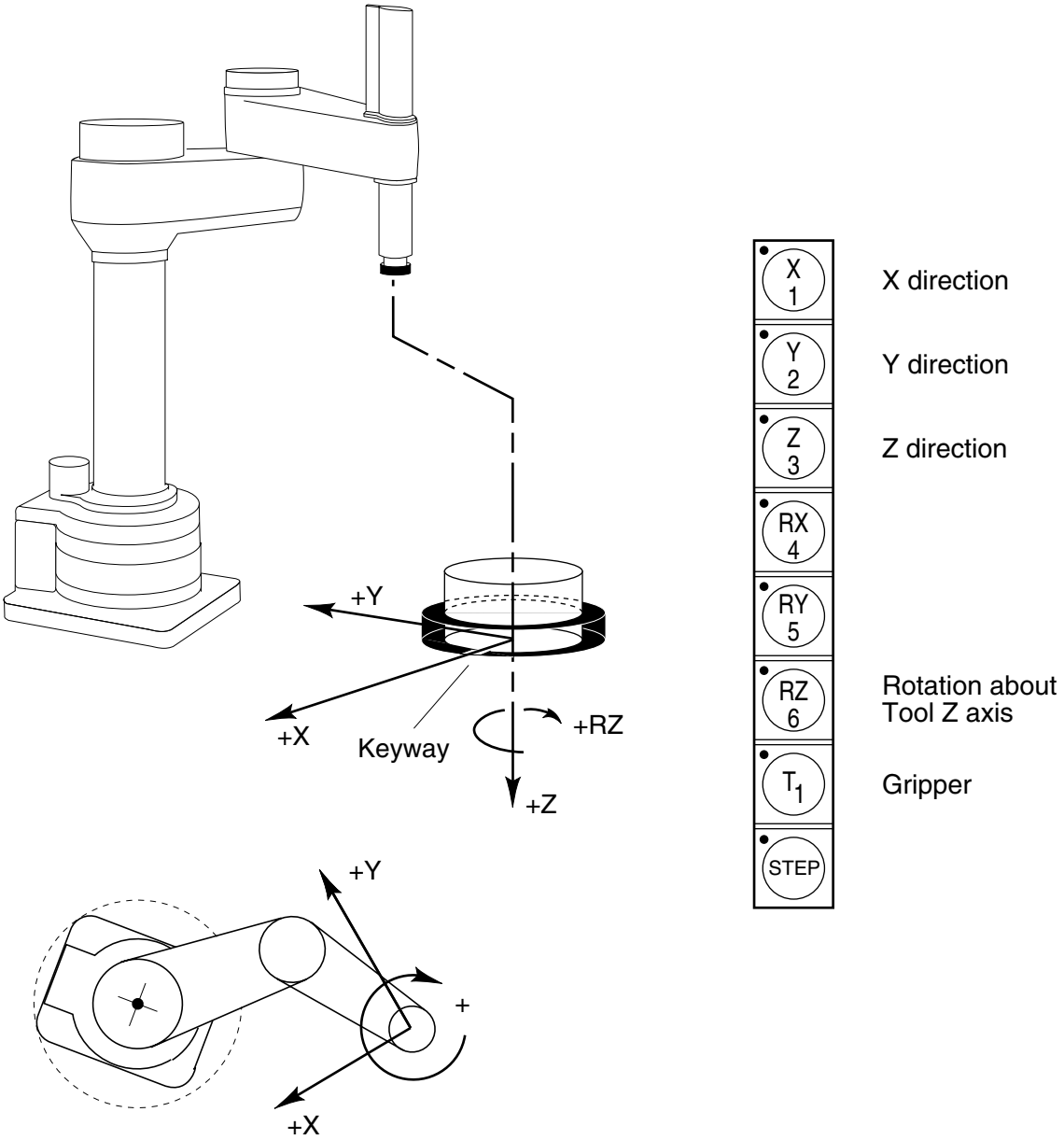

Figure C-15. TOOL State (Four-Axis SCARA)

Artisan Technology Group - Quality Instrumentation ... Guaranteed | (888) 88-SOURCE | www.artisantg.com

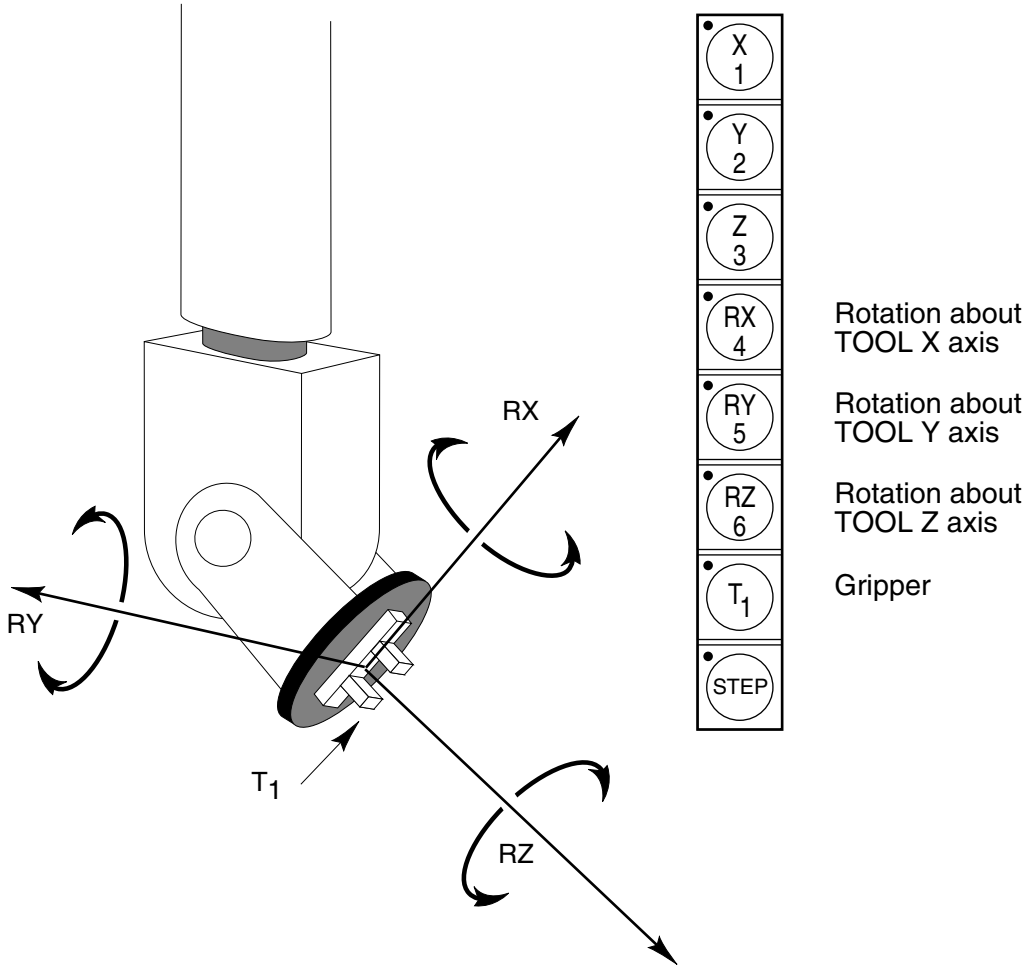

Figure C-16. TOOL State (Six-Axis Robot)

Artisan Technology Group - Quality Instrumentation ... Guaranteed | (888) 88-SOURCE | www.artisantg.com

Joint State

When Joint state is selected, movement is about the axis of the specified joint. The following figure shows an Adept SCARA robot with three rotational joints (Joints 1, 2, and 4) and one translational joint (Joint 3). Positive rotation of joints 1, 2, and 4 is counterclockwise as viewed from above. Positive movement of Joint 3 is downward. Before the speed bars will move a joint, the joint must be selected from the manual control buttons.

Different robots or motion devices will have the different joint numbers assigned to their joints. When you first move an unfamiliar robot using Joint state, set the monitor speed to 10 or lower, put the robot in a safe area, and carefully move the robot using the different joint numbers to verify how the MCP moves the robot. See the documentation for the motion devices you are using for details on their joint assignments.

NOTE: Joint state is not available for Adept Quattro Robots.

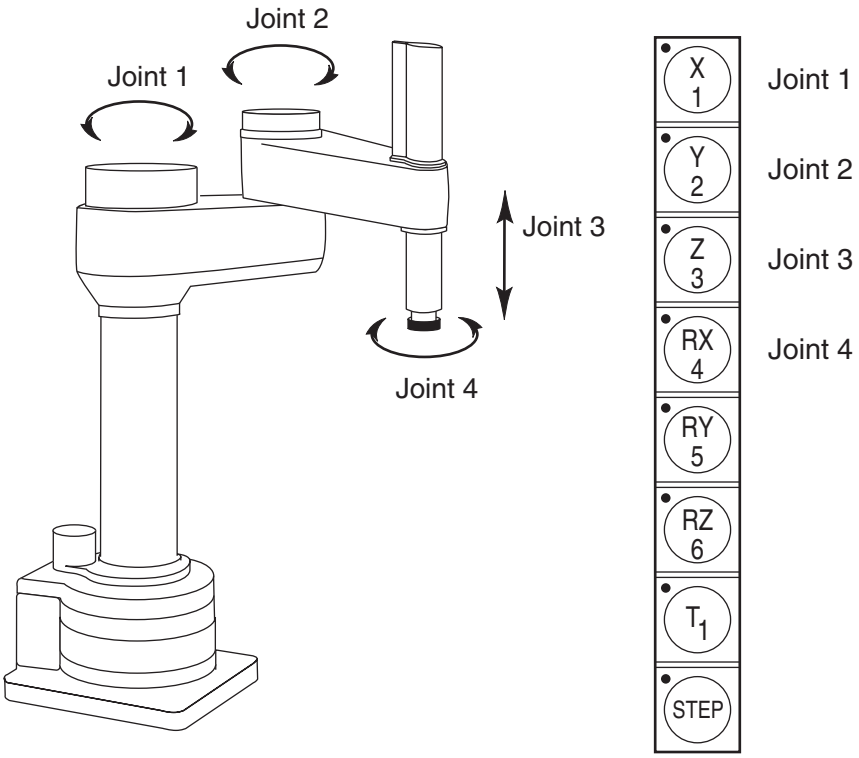

Figure C-17. JOINT State (Four-Axis SCARA)

Artisan Technology Group - Quality Instrumentation ... Guaranteed | (888) 88-SOURCE | www.artisantg.com

The following figure shows the joint assignments for a typical six-axis robot (as always, the first time you move a robot, carefully verify the joint assignments).

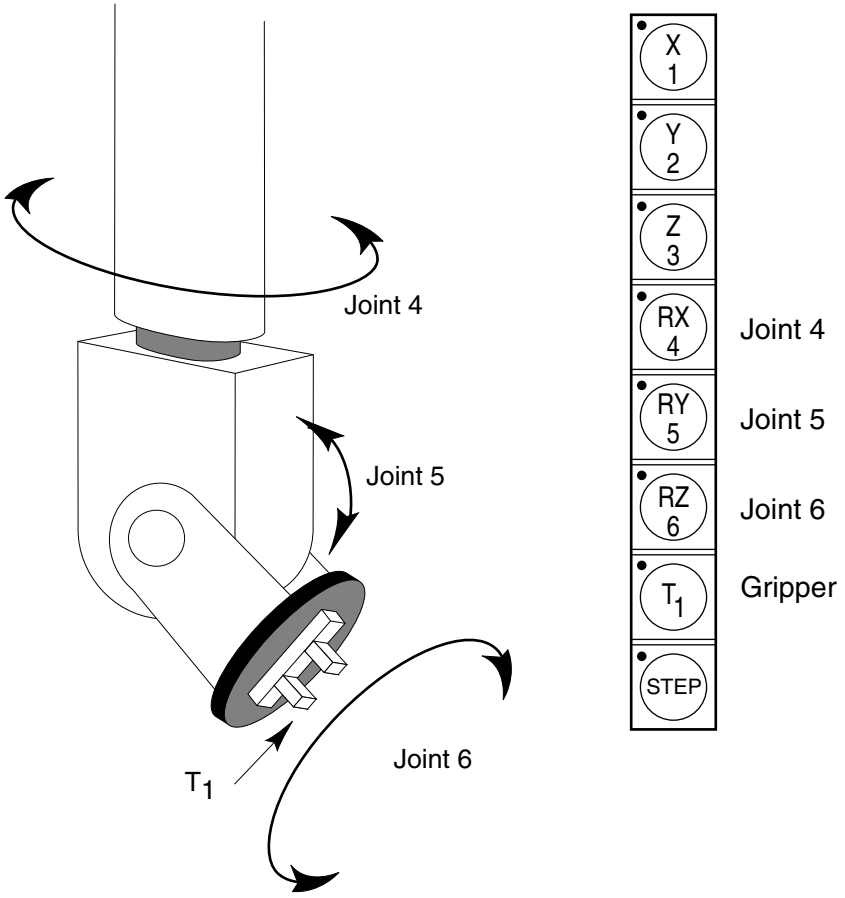

Figure C-18. JOINT State (Six-Axis Robot)

Free State

When Free state is selected, individual joints are freed from servo control, and the robot brakes (if any) are released. Unlike the other states, you can make multiple selections from the manual control buttons to free as many joints as required. In some cases, such as Joints 1 and 2 on an AdeptOne/AdeptThree robot, multiple joints are freed by selecting a single button. On some robots, free state may have been disabled by the manufacturer on some or all joints.

> **NOTE:** Free state, also referred to as Free mode, is disabled on Adept Viper, AdeptSix, and Adept Quattro robots.

As soon as the COMP/PWR button is pressed, or another selection is made from the manual control buttons, all joints are placed back under servo control and will not move freely.

Figure C-19 on page 150 shows the Free state for a four-axis SCARA robot. The joint assignments in the Free state are the same as the joint assignments in Joint state.

Artisan Technology Group - Quality Instrumentation ... Guaranteed | (888) 88-SOURCE | www.artisantg.com

WARNING: As soon as a joint is selected from the manual control buttons, the related joint is free to move (in some cases, multiple joints may be freed up). In many cases, the weight on the joint will be sufficient to move the joint and cause damage or harm. For example, when joint 3 on a SCARA or Cartesian robot is freed, the joint is free to fall to the end of its travel. In articulated robots, multiple links of the robot may be free to fall when a single joint is freed up. Be extremely careful when selecting a joint in free mode.

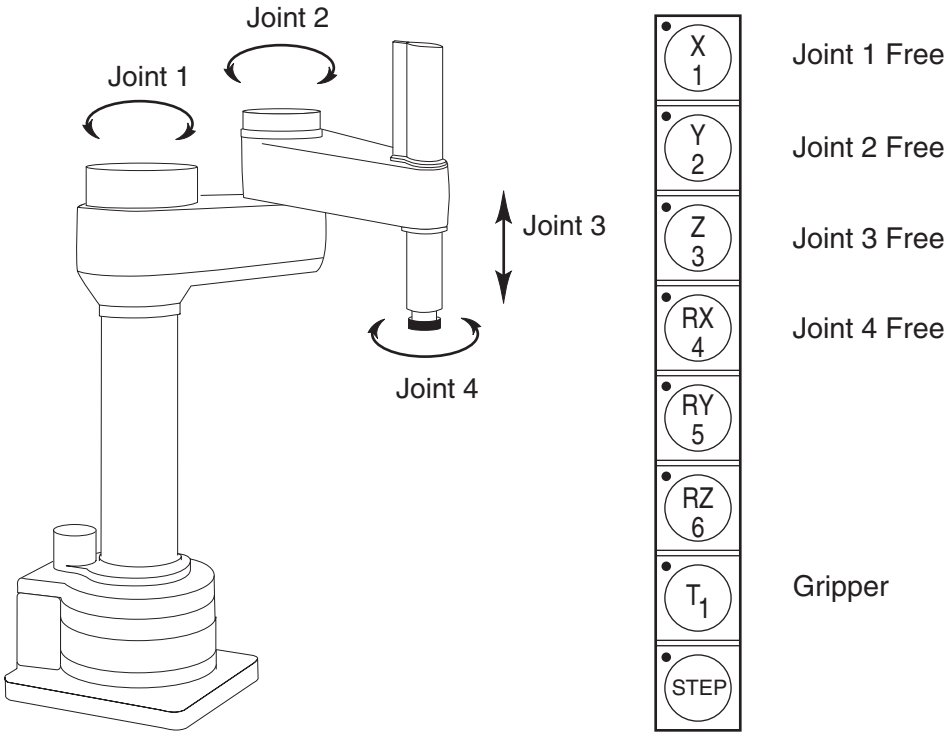

Figure C-19. FREE State (Four-Axis SCARA)

Artisan Technology Group - Quality Instrumentation ... Guaranteed | (888) 88-SOURCE | www.artisantg.com

Controlling More Than One Robot

Like the monitor and each program task, the Manual Control Pendant (MCP) can also have a robot attached. When moving a robot from the MCP or displaying joint values or world locations by pressing the DISP key, only the currently selected robot is affected. The robot currently selected by the MCP is shown by the state of the DEV LED (in the manual state LED group; see **Figure C-4 on page 130**). The following table describes the conditions.

Table C-2. Controlling More Than One Robot

DEV LED state	Robot selected by pendant
OFF	1
ON	2
FLASHING	3 (and above)

The MCP selection cycles from one robot to the next each time the DEV/F3 key is pressed. Be careful when recording positions with the MCP; the position recorded by HERE or TEACH commands depends on the robot that is currently selected by the monitor or program and not on the robot selected by the MCP. The following commands will allow you to teach the position of robot 2 regardless of which robot is selected by the MCP.

```
.SELECT ROBOT = 2        ;Choose robot to be accessed by Monitor
.TEACH p[1]              ;Record location(s) of robot 2
```

Robots with Six or Less Joints

The MCP has six axis/joint selection buttons. In Cartesian modes (WORLD, TOOL), these correspond to all six possible Cartesian values: X, Y, Z, RX, RY, RZ. Not all mechanisms can move in all of these coordinates. For example, a 4-axis SCARA robot can move in only X, Y, Z and RZ. Buttons that have no effect on your robot are ignored and in some cases cannot be selected.

Artisan Technology Group - Quality Instrumentation ... Guaranteed | (888) 88-SOURCE | www.artisantg.com

Robots with More Than Six Joints

In JOINT mode, each of the six buttons is used to control a specific joint of the robot. If the robot has more than six joints, the F2/J7-J12 key can be used to access the 7th to 12th joints. Only the robot currently selected by the MCP is affected. The currently selected joint is shown by the state of the LED on the joint/axis key as described below. If you press the key for joint 1, and the LED is steady, you are controlling joint 1. If you press F2/J7-J12, then press the key for joint 1, the LED will flash, indicating that you are controlling joint 7.

Table C-3. Robots With More Than 6 Axes

Joint/Axis LED state	Joint range
OFF	None
STEADY	1 to 6
FLASHING	7 to 12

The MCP cycles from one range to the other each time the F2/J7-J12 key is pressed.

Artisan Technology Group - Quality Instrumentation ... Guaranteed | (888) 88-SOURCE | www.artisantg.com

Artisan Technology Group

Artisan Technology Group is your source for quality new and certified-used/pre-owned equipment

- FAST SHIPPING AND DELIVERY
- TENS OF THOUSANDS OF IN-STOCK ITEMS
- EQUIPMENT DEMOS
- HUNDREDS OF MANUFACTURERS SUPPORTED
- LEASING/MONTHLY RENTALS
- ITAR CERTIFIED SECURE ASSET SOLUTIONS

SERVICE CENTER REPAIRS
Experienced engineers and technicians on staff at our full-service, in-house repair center

InstraView℠ REMOTE INSPECTION
Remotely inspect equipment before purchasing with our interactive website at ***www.instraview.com*** ↗

WE BUY USED EQUIPMENT
Sell your excess, underutilized, and idle used equipment
We also offer credit for buy-backs and trade-ins
www.artisantg.com/WeBuyEquipment ↗

LOOKING FOR MORE INFORMATION?
Visit us on the web at ***www.artisantg.com*** ↗ for more information on price quotations, drivers, technical specifications, manuals, and documentation

Contact us: (888) 88-SOURCE | sales@artisantg.com | www.artisantg.com