Artisan Technology Group

Artisan Technology Group is your source for quality new and certified-used/pre-owned equipment

- FAST SHIPPING AND DELIVERY
- TENS OF THOUSANDS OF IN-STOCK ITEMS
- EQUIPMENT DEMOS
- HUNDREDS OF MANUFACTURERS SUPPORTED
- LEASING/MONTHLY RENTALS
- ITAR CERTIFIED SECURE ASSET SOLUTIONS

SERVICE CENTER REPAIRS
Experienced engineers and technicians on staff at our full-service, in-house repair center

InstraView℠ REMOTE INSPECTION
Remotely inspect equipment before purchasing with our interactive website at ***www.instraview.com*** ↗

WE BUY USED EQUIPMENT
Sell your excess, underutilized, and idle used equipment
We also offer credit for buy-backs and trade-ins
www.artisantg.com/WeBuyEquipment ↗

LOOKING FOR MORE INFORMATION?
Visit us on the web at ***www.artisantg.com*** ↗ for more information on price quotations, drivers, technical specifications, manuals, and documentation

Contact us: (888) 88-SOURCE | sales@artisantg.com | www.artisantg.com

PC2 – CamLink

KEY BENEFITS

Linescan Camera Support
- Variable frame length acquisition
- Supports infinite vertical length frame (8K pixels x infinite number of lines)
- Shaft encoder with tick divider

Area Scan Camera Support
- Frame size up to 8K pixels x 8K lines

Visual Status LED
- Facilitates installation by providing visual status of the acquisition
- Separate indicator for trigger detection
- Visible on PCI bracket

Extensive Trigger Interface Options
- Separate inputs for 2 Opto-coupled/TTL and 2 LVDS triggers
- Dual phase shaft encoder for linescan applications on 2 dedicated LVDS inputs

Parallel I/O Connector
- 8-bit in/8-bit out registered interface to simplify connectivity to other machine vision equipment
- Pin-to-pin connector compatible with other PC2 Series and PC Vision cards

OVERVIEW

Building your machine vision system just got easier

Part of DALSA's PC2 Series of frame grabbers, the PC2-CamLink™ is ideal for cost sensitive applications. Compatible with one monochrome, area or line scan Base Camera Link™ camera, the PC2-Camlink is a snap to interface to you r vision system thanks to the Camera Link standard and DALSA's innovative visual status LED. When you connect the camera cable and external triggers the PC2-CamLink visual status LED s, mounted on the bracket, provide an immediate visual indication that all signals are present and active. To further simplify setup, the PC2- Camlink provides direct power (5V or 12V) to your camera.

The PC2-CamLink has been engineered within DALSA's exacting Trigger- to- Imaging Reliability technology framework to control and monitor the entire image acquisition sequence.

Artisan Technology Group - Quality Instrumentation ... Guaranteed | (888) 88-SOURCE | www.artisantg.com

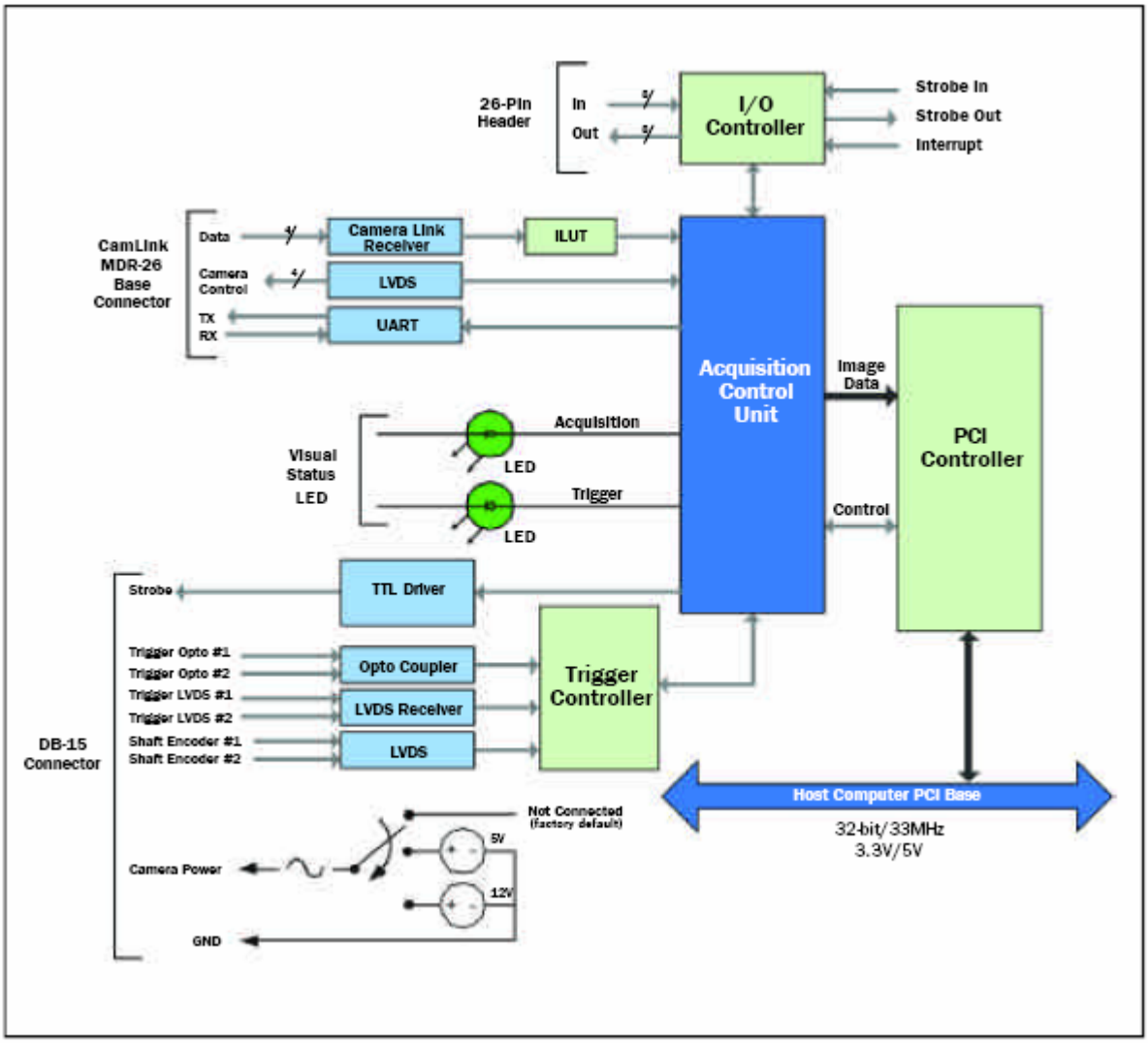

PC2-CamLink Functional Block Diagram

Built-in Reliability and Ease of Use

The PC2-CamLink has been engineered within DALSA's exacting Trigger-to-Imaging Reliability technology framework to leverage hardware and software innovations, like time stamping, event tracking, and false trigger rejection, to control, monitor, and correct the image acquisition process from the time an external trigger event occurs to the moment the data is sent to the PCI bus.

Acquisition Control Unit

At the heart of the PC2-CamLink's Trigger-to-Image Reliability is the Acquisition Control Unit (ACU), which controls the image acquisition sequence from the time an external trigger event occurs to the time the video data is sent into the PCI bus. The ACU ensures that data is delivered flawlessly to the host buffers, and will also signal the application if a problem prevents a complete image from being transferred. The ACU ensures efficient, repeatable and accurate image capture.

Trigger Controller

The trigger controller supervises all trigger inputs coming into the PC2-CamLink (including the shaft encoder) and makes certain they are valid before forwarding them to the ACU. A debouncer ensures that small glitches are not mistakenly detected as valid triggers. Opto-coupled trigger inputs supporting 24V are available to electrically decouple the board from the trigger signal. A dual phase shaft encoder is integrated into the trigger controller to ensure accurate images for processing in linescan applications.

Visual Status LED

The PC2-CamLink is designed to facilitate ease-of-use and features visual status LEDs to simplify system installation and setup on the factory floor. A status indicator LED provides visual feedback when the correct camera connection is made and when an image grab is in progress to further speed the diagnostic process. In addition, a second LED shows when a valid external trigger is detected. These visual indicators allow developers to instantly recognize if cabling has been correctly set up.

Artisan Technology Group - Quality Instrumentation ... Guaranteed | (888) 88-SOURCE | www.artisantg.com

Channel Scanning

The PC2-CamLink supports the following channel scanning topology: 1-channel raster, 2-channel interleave pixels, 2-channel interlines, and 2-channel half-line segmented. Pixel depths up to 16-bit are also supported. Pixels can optionally be truncated to 8-bit to ease camera setup and lower PCI bandwidth.

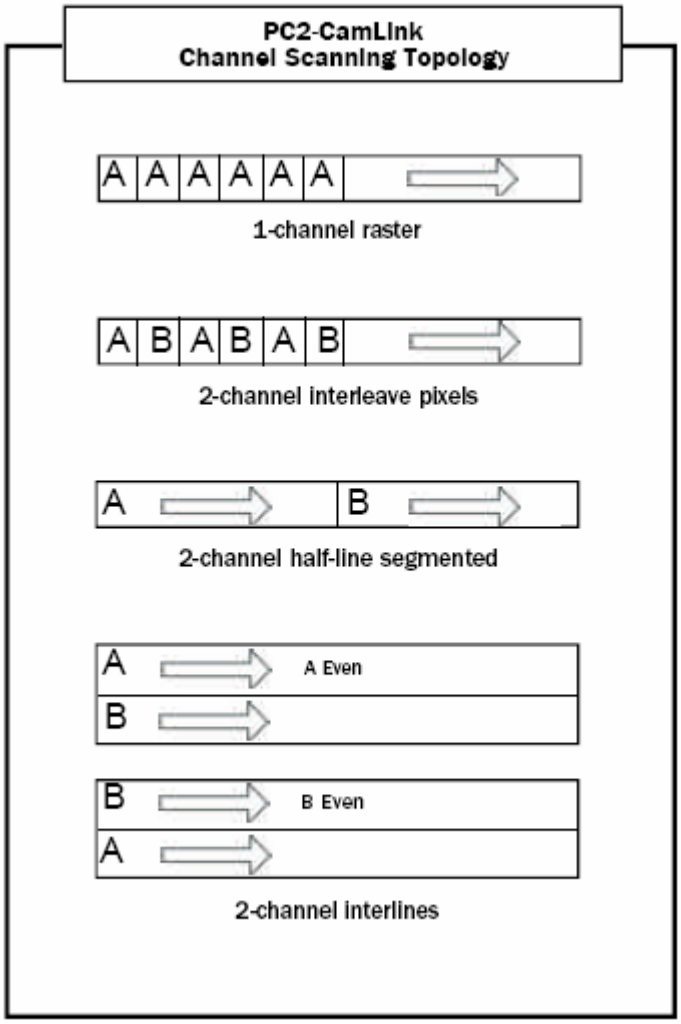

Host Transfers

Transfers to the host memory are performed via the PCI bus. The PC2-CamLink is 5V and 3.3V PCI compliant. The hardware scatter-gather engine requires minimal CPU involvement as it automatically retrieves each descriptor representing the non-contiguous host memory. The PC2-CamLink performs transfers to the host memory or to a display. Direct transfers for display of monochrome images to a YCrCb overlay are supported in the hardware by adding neutral chrominance to the pixel data. This minimizes the amount of DirectDraw® work the CPU must perform.

Parallel I/O Controller

The parallel I/O controller offers a convenient way to interface thePC2-CamLink to other controllers within the machine vision system. It features 8 inputs, a strobe input (used to latch the 8 input data), 8 outputs, and a strobe out (used to latch the 8 output data at the receiver). The PC2-CamLink also has one dedicated interrupt input wit programmable polarity, and two fused +5V output pins (500mA - power off reset). All I/O pins are connector pin compatible with other PC2 series boards.

Software Support

Acquisition, processing and analysis

PC2-CamLink is fully supported by DALSA's Sapera™ LT and Imaging Foundation Class™ (IFC) software development libraries enabling PC2-Camlink application to be developed under Windows NT®, Windows® 2000, and Windows® XP. Sapera LT allows users to develop applications with C language DLLs, C++® classes or Active X® controls for Microsoft® Visual C/C++® 6.0 (or higher) or Visual Basic® 6.0 (or higher) development platforms.

Sapera LT's advanced image acquisition and control functions are an integral part of DALSA's stringent Trigger-to-Image Reliability technology framework. Sapera LT offers users a single API across DALSA's current and future hardware platform, to deliver a comprehensive feature set including program portability, versatile camera controls, flexible display functionality and management, and easy to use application development wizards.

For image processing and analysis DALSA offers Sapera Processing. Fully integrated with Sapera LT functionality, Sapera Processing is a dynamic Windows - based comprehensive programming library. Hardware independent and designed to simplify vision application development, Sapera Processing is based on a set SIMD Extensions), and SSE2 to meet the challenging operational requirements of today's imaging systems. Scalable in design, Sapera Processing offers a comprehensive set of optimized tools, (as a suite o standalone) including image processing, search (pattern recognition), OCR, barcode decoding, an blob analysis. Sapera LT and Sapera Processing combine seamlessly to deliver a powerful and easy to use development resource for advanced image acquisition, processing, and analysis.

Artisan Technology Group - Quality Instrumentation ... Guaranteed | (888) 88-SOURCE | www.artisantg.com

Specifications*

Board	PCI - Half-slot rev. 2.1 compliant for 5V and 3.3V slots (32-bit, 33MHz)
Acquisition	1 Base Camera Area scan and linescan 1 or 2 channels
Scanning	1-channel raster 2-channel interleaved pixels 2-channel interlines 2-channel half-line segmented (left to right)
Pixel Format	8, 10, 12, 14, 16-bit 10, 12, 14-bit pixels promoted to 16-bit 10, 12, 14, 16-bit pixels optionally truncated to 8-bit Pixel rate up to 66MHz
Controls	Support for EXSYNC and PRIN on any of the four Camera Control (CC) lines (SW selectable) 2 Trigger input SW selectable with debouncing (supports 2 Opto or 2 LVDS or 2 TTL) Quadrature shaft encoder (LVDS) with tick divider 1 Strobe output TTL-level
Data Formatting	3 x 8-bit ILUT Acquisition cropper YCrCb converter during PCI transfer
Image Size	8K pixel x 8K line for area scan 8K pixel x infinite number of lines for linescan Variable frame length for linescan (level control or start/stop pulse control)
Connectors	One MDR-26 for Camera Link One DB15 for trigger, strobe and +12V/+5V power (available on PCI bracket) One 26-pin header for Parallel I/O (flat cable to second slot)
I/O	19 general-purpose I/O pins, TTL level (8 input, 8 output, 2 strobes, 1 interrupt) with 2 soft-fused +5V power pins One RS-232C serial port, mapped as regular Windows COM PORT
Miscellaneous	2 LED status indicators: Acquisition and Trigger
Software	Supported by Sapera LT and IFC Processing and analysis using Sapera Processing Microsoft Windows NT 4.0, Windows 2000 and Windows XP compatible Application development using Microsoft C/C++ DLLs or Visual Basic
System Requirements	Intel® Pentium® III class CPU, 128MB system memory, 30MB free hard drive space
Dimensions	6.675" (17cm) Length x 4.20" (10.7cm) Height (standard PCI half-slot card)
Camera Power	5V (up to 1.5A) and 12V (up to 0.5A) taken from PCI connector with auto-reset fuse Option to plug floppy power cable for more current (up to 1.5A)
Temperature	0° C (32° F) to 55° C (131° F) Relative Humidity: 5% up to 95% (non-condensing)
Markings	FCC class B - Approved CE class B - Approved

* Last updated February 2007

7075 Place Robert-Joncas, Suite 142, St-Laurent, Quebec, Canada H4M 2Z2
Tel: 514.333.1301 US Subsidiary: 978-670-2000 Email: info@dalsa-coreco.com
Visit us online @ www.imaging.com

All trademarks are registered by their respective companies. DALSA reserves the right to make changes at any time without notice. CODS-1182+ DALSA 2007
Artisan Technology Group - Quality Instrumentation ... Guaranteed | (888) 88-SOURCE | www.artisantg.com

Artisan Technology Group

Artisan Technology Group is your source for quality new and certified-used/pre-owned equipment

- FAST SHIPPING AND DELIVERY
- TENS OF THOUSANDS OF IN-STOCK ITEMS
- EQUIPMENT DEMOS
- HUNDREDS OF MANUFACTURERS SUPPORTED
- LEASING/MONTHLY RENTALS
- ITAR CERTIFIED SECURE ASSET SOLUTIONS

SERVICE CENTER REPAIRS
Experienced engineers and technicians on staff at our full-service, in-house repair center

InstraView℠ REMOTE INSPECTION
Remotely inspect equipment before purchasing with our interactive website at ***www.instraview.com*** ↗

WE BUY USED EQUIPMENT
Sell your excess, underutilized, and idle used equipment
We also offer credit for buy-backs and trade-ins
www.artisantg.com/WeBuyEquipment ↗

LOOKING FOR MORE INFORMATION?
Visit us on the web at ***www.artisantg.com*** ↗ for more information on price quotations, drivers, technical specifications, manuals, and documentation

Contact us: (888) 88-SOURCE | sales@artisantg.com | www.artisantg.com