Artisan Technology Group

Artisan Technology Group is your source for quality new and certified-used/pre-owned equipment

- FAST SHIPPING AND DELIVERY
- TENS OF THOUSANDS OF IN-STOCK ITEMS
- EQUIPMENT DEMOS
- HUNDREDS OF MANUFACTURERS SUPPORTED
- LEASING/MONTHLY RENTALS
- ITAR CERTIFIED SECURE ASSET SOLUTIONS

SERVICE CENTER REPAIRS
Experienced engineers and technicians on staff at our full-service, in-house repair center

InstraView℠ REMOTE INSPECTION
Remotely inspect equipment before purchasing with our interactive website at ***www.instraview.com*** ↗

WE BUY USED EQUIPMENT
Sell your excess, underutilized, and idle used equipment
We also offer credit for buy-backs and trade-ins
www.artisantg.com/WeBuyEquipment ↗

LOOKING FOR MORE INFORMATION?
Visit us on the web at ***www.artisantg.com*** ↗ for more information on price quotations, drivers, technical specifications, manuals, and documentation

Contact us: (888) 88-SOURCE | sales@artisantg.com | www.artisantg.com

MOTION TECHNOLOGY DIVISION

110 Fordham Road
Wilmington, MA 01887
(508) 988-9800
Fax (508) 988-9940

Part# 903-073011-02
List Price $30 U.S.
April, 1996

Digital Personality Module

Programming and Hardware Installation Manual

for use with SC320/SC720

Version 1.01

Artisan Technology Group - Quality Instrumentation ... Guaranteed | (888) 88-SOURCE | www.artisantg.com

Table of Contents

1 Overview of the Digital Personality Module 1-1

1.1 Digital Personality Module Definition 1-1
1.2 How to Use this Manual 1-2
1.3 Warranty 1-2

2 Getting Started 2-1

2.1 Setting Up Your Hardware 2-1
2.2 Installing DPM Dialogue™ to Your Hard Drive 2-3
2.3 Starting DPM Dialogue 2-3
2.4 Getting Around in DPM Dialogue 2-4
2.5 Configuring Your System 2-5
2.6 Configuring Your Controller 2-6
2.7 Using the Variables Window 2-7
2.8 Reviewing and Editing Parameters 2-8
2.9 Downloading Parameters to the DPM 2-9
2.10 Saving Parameters on Disk 2-9
2.11 Opening a Disk File 2-10
2.12 Exiting DPM Dialogue 2-10

3 DPM Interfaces and Connections 3-1

3.1 Serial Port 3-1
3.2 Encoder/Step-and-Direction Port 3-5

4 The DPM Dialogue Environment 4-1

4.1 Host PC Requirements 4-1
4.2 Setting up Your Controller to Run with DPM 4-2
4.3 Introduction to the DPM Dialogue Environment 4-3
4.4 Parameter Edit Screen 4-6
4.5 Options Menu - Environment Set Up 4-7
4.5.1 Display Set Up 4-8

Artisan Technology Group - Quality Instrumentation ... Guaranteed | (888) 88-SOURCE | www.artisantg.com

4.5.2 Communications Set Up 4-8
4.5.3 Axis Selection 4-9
4.5.4 Finding the Axis Address of a DPM 4-10
4.5.5 Controller Set Up 4-10
4.5.6 Unconfiguring the controller 4-15
4.4.7 Zeroing the Command OFFSET 4-16
4.6 File Menu 4-18
4.6.1 Creating a Parameter File 4-19
4.6.2 Opening a Parameter File 4-24
4.6.3 Saving a Parameter File 4-25
4.6.4 Save As Parameter File 4-25
4.6.5 Printing A Parameter File 4-26
4.6.6 Shelling to DOS 4-26
4.6.7 Exiting from DPM Dialogue 4-26
4.7 Controller Menu. 4-27
4.7.1 Downloading to the Controller 4-27
4.7.2 Uploading from the Controler 4-28
4.7.3 Non-Volatile Memory 4-30
4.7.4 Monitoring and Changing Variables 4-31
4.8 F1-Help Menu 4-35
4.8.1 Index of Commands 4-36
4.8.2 General Help 4-37
4.8.3 About... 4-37

5 Torque Control, Velocity Loop Control, Position Loop Control 5-1

5.1 Changing Blocktype 5-1
5.2 Blocktype = 0: Torque Control 5-2
5.3 Blocktype = 1: Velocity Control 5-6
5.4 Blocktype = 2: Position Control 5-10

Artisan Technology Group - Quality Instrumentation ... Guaranteed | (888) 88-SOURCE | www.artisantg.com

6 Setting Parameters for Electronic Gearing **6-1**
6.1 Slaving the SC320/SC720 to a Master Encoder 6-1
6.2 Controlling the DPM with a Stepper Indexer 6-3

7 Servo Loop Parameters **7-1**
7.1 Velocity Loop 7-1
7.2 Position Loop 7-7

8 Parameter, Variable and Command Reference **8-1**
8.1 Quick Reference 8-1
8.2 Programming Instructions 8-4

Appendix A Specifications **A-1**

Appendix B System Status Display **B-1**

Artisan Technology Group - Quality Instrumentation ... Guaranteed | (888) 88-SOURCE | www.artisantg.com

1 Overview of the Digital Personality Module

1.1 Digital Personality Module Definition

Features

The Digital Personality Module (DPM) for your Pacific Scientific SC720 or SC320 servo controller replaces the Analog Personality Module. Combined with DPM Dialogue[R], a menu driven software support package which runs on your IBM[1] PC[1] or PC clone, the DPM offers the following features:

- All digital setup of the current loop, velocity loop, and (when utilized) position loop. There are no pots, DIP switches, plug-on jumpers or components to alter when setting up the servo loops. All parameters are downloaded using an RS-232 or RS-485 port and can be saved in non-volatile memory.
- Automatic controller setup using DPM Dialogue.
- Automatic velocity offset adjustment using DPM Dialogue.
- Simplified uploading, downloading, and disk storage of DPM parameters for easy cloning and backup documentation.
- Slave operation in electronic gearing applications.
- Position control using Step and Direction inputs. This means that your SC320/SC720 can be driven directly from most stepper indexers.
- Precise readout of motor velocity and position using the serial link and DPM Dialogue.

Artisan Technology Group - Quality Instrumentation ... Guaranteed | (888) 88-SOURCE | www.artisantg.com

1.2 How to use this manual

Chapter 2, “Getting Started”, is a step-by-step guide allowing you to configure the DPM and run your motor within a few minutes. **It is strongly recommended that you go through Chapter 2 first.** This will give you a feel for using the DPM and lay the framework for reading the other chapters. Chapters 3 through 5 and Chapter 7 should be read thoroughly to gain the most from the DPM. If your SC720 is to be used as a slave in electronic gearing or driven by step-and-direction inputs, Chapter 6 should also be read. Chapter 8 is an alphabetized listing of commands and variable with detailed descriptions which is a very useful reference during setup.

1.3 Warranty

The Pacific Scientific Digital Personality Module has a **two year warranty** against defects in material and assembly. Products that have been modified by the customer, physically mishandled, or otherwise abused through miswiring, and so on, are exempt from the warranty plan.

Artisan Technology Group - Quality Instrumentation ... Guaranteed | (888) 88-SOURCE | www.artisantg.com

2 Getting Started

Introduction

This chapter provides a step-by-step guide to setting up the DPM and running your motor. It is strongly recommended that you go through this procedure to become familiar with using the DPM and DPM Dialogue.

2.1 Setting Up the Hardware

You will be configuring your SC320/SC720 as an analog velocity controller. Install the DPM into the personality module slot of your SC320/SC720 and make the connections shown in the figure below. An adjustable power supply or the battery/pot configuration shown can be used to generate the analog speed command. The RS-232 cable made by Pacific Scientific (order number CS-232-700) can be used to connect the 9 socket serial port of the DPM to the serial port of your PC. If this cable is unavailable, a simple 3 wire cable can be made using the wiring diagram shown on the following page.

Command connections

In addition to the analog speed command and serial connections, two additional command connections must be made:

- The Enable/ Input (J22-4) must be connected through a toggle switch to Common (J22-3). The toggle switch must be closed to enable the SC320/SC720 controller.
- The Reset/ Input (J22-5) must be connected through a momentary (normally open) switch to Common (J22-9). The switch will be closed to clear fault conditions.

Connect the motor, feedback, and AC power cables as shown in the following figure but **don't apply AC power at this time.** It is recommended that Pacific Scientific motor and feedback cables be used during setup since improper cabling is the number one cause of startup problems. For this exercise, leave the motor unloaded with nothing attached to the motor shaft.

Artisan Technology Group - Quality Instrumentation ... Guaranteed | (888) 88-SOURCE | www.artisantg.com

Connection diagram

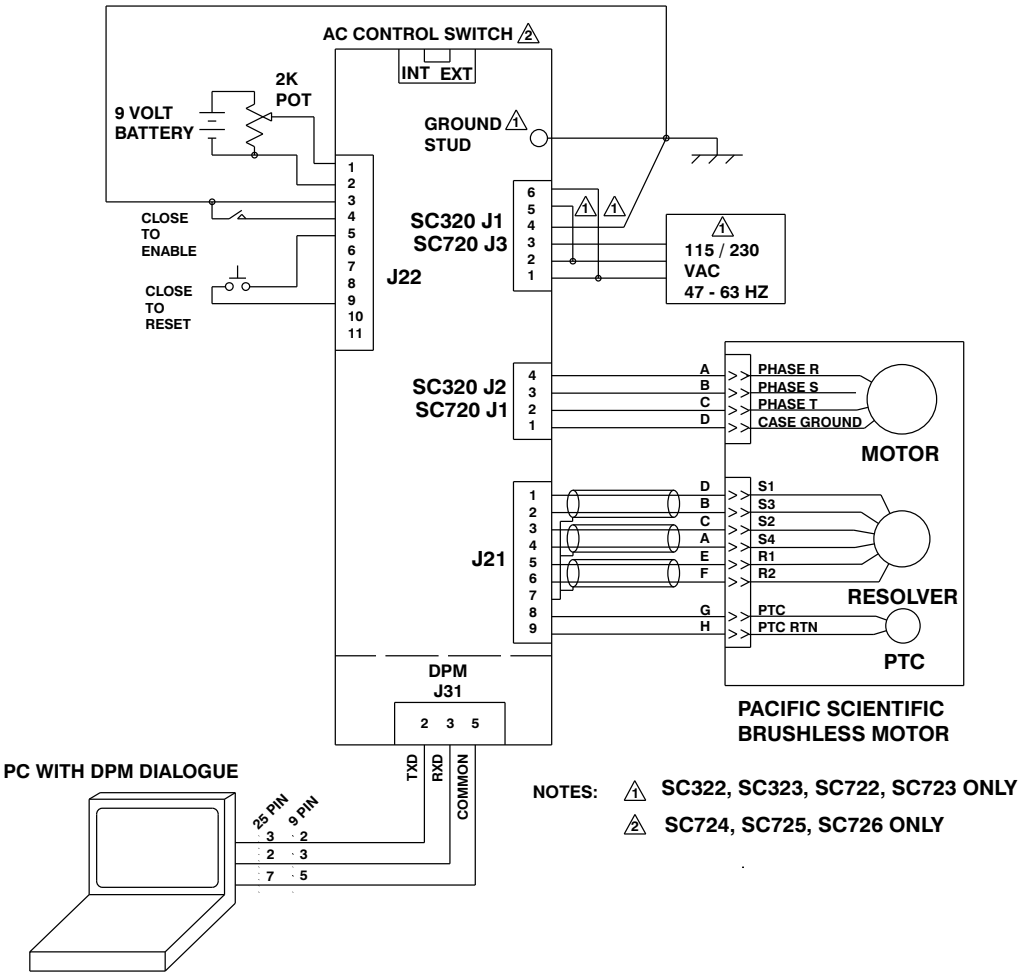

NOTES: 1 SC322, SC323, SC722, SC723 ONLY

2 SC724, SC725, SC726 ONLY

Artisan Technology Group - Quality Instrumentation ... Guaranteed | (888) 88-SOURCE | www.artisantg.com

2.2 Installing DPM Dialogue to Your Hard Drive

Procedure

To install DPM Dialogue, perform the following:

1. At the DOS prompt, type **cd** and press <**Enter**> to access the root directory.

2. Create a new directory named "DPM" by typing **md DPM** and pressing <**Enter**>.

3. Type **cd DPM** to access the new subdirectory.

Note: *If the prompt is set to show the current directory, the screen should now display c:\DPM.*

Insert the "DPM Dialogue" disk in your disk drive (A: or B:) and type **copy a:*.*** (or **copy b:*.***) and press <**Enter**>. This will copy DPM Dialogue to the hard drive.

Note: *The DPM Dialogue disk should be removed from the drive and stored in a safe place.*

2.3 Starting DPM Dialogue

Procedure

To begin using DPM Dialogue perform the following:

1. **If not already in the DPM subdirectory**, access the subdirectory "DPM" from the root directory by typing **cd DPM** and then pressing <**Enter**>.

2. To start DPM Dialogue type **DPM** and press <**Enter**>. Because your SC320/SC720 is not powered, you will receive a Warning:

   The PacSci Controller Gave no Response.
   Controller Version Number Cannot be Determined.

Simply press <**Enter**> to continue. The DPM Dialogue main menu will appear on your screen.

Artisan Technology Group - Quality Instrumentation ... Guaranteed | (888) 88-SOURCE | www.artisantg.com

2.4 Getting Around in DPM Dialogue

DPM Dialogue main menu

```
File          Controller          Options          F1 - Help

 New Setup...   a comment line for your use which is NOT sent to DPM
  pen...
  ave          ame is
 Save  s...              =                0
                         =              ----
  rint...                =                1
  os Shell               =          1.00000 krpm/volt
                         =             1024 line count
 E it                    =          0.00000 percent
                         =          0.00000 amp/rad/sec
        KVI              =          0.00000 hertz
        ARF0             =          0.00000 hertz
        ARF1             =          0.00000 hertz
        KVFF             =          0.00000 percent
        ILMT.PLUS        =                0 percent
        ILMT.MINUS       =                0 percent
        KPP              =          0.00000 hertz
        KPI              =          0.00000 hertz
        GEARING          =                0

   Axis 255     C:\DPM\NONAME1.PRM
 Press F10 to alternate between Dropdown Menus and Parameter-Edit screen
PACIFIC SCIENTIFIC  DPM Setup Utility Version 1.01              10:09:15 AM
```

Movement Keys

The <**F10**>, <**Esc**>, <**Tab**> and **arrow keys** allow you to move around DPM Dialogue:

- The **<F10>** key alternates between the Drop down Menus and the Parameter-Edit screen
- The **<Tab>** and **arrow keys** allow you to move between the menu options
- The <**Esc**> key allows you to exit from menu screens. Pressing the <**Esc**> key several times will always return you to the Parameter-Edit screen

Artisan Technology Group - Quality Instrumentation ... Guaranteed | (888) 88-SOURCE | www.artisantg.com

2.5 Configuring Your System

Applying AC Power

Carefully check all connections and then apply AC power to your controller. The display should show the number **4** and the green LED on the DPM will flash indicating that the controller is not configured (parameters have not been setup).

Display and Serial Port

Use the arrow keys (← , →) to highlight the **Options** menu. (If the arrow keys do not select different menus, press the <**F10**> key once.) Use the arrow keys (, ↓)to select **Display**. Press the <**F1**> key to get help information about the Display option**.**

Getting Help

The Help message reads:

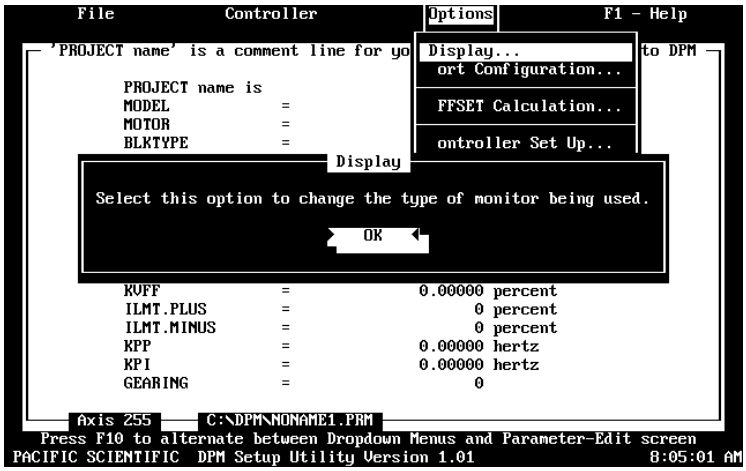

Information about each selection can be obtained in this way. Press **<Enter>** once to clear the help screen.

Press <**Enter**> again to select Display. Select either **Color Monitor** or **Monochrome Monitor** as appropriate and press <**Enter**>.

Serial Port

Select **Port Configuration** and press <**Enter**>. Select **COM1**, **COM2**, **COM3**, or **COM4** depending upon which port of your PC is connected to the serial port of the DPM and press <**Enter**>.

Artisan Technology Group - Quality Instrumentation ... Guaranteed | (888) 88-SOURCE | www.artisantg.com

2.6 Configuring Your Controller

Procedure

- Select **Controller Set Up** and press <**Enter**>. Select **Auto** and press <**Enter**>. Enter the first four Digits of your Motor Part Number. For example, if the part number on your motor name plate is R32GENC-R2-NS-NV-00, type **R32G** and press <**Enter**>.
- Select the controller you're using (**Example:** SC722) and press <**Enter**>.
- Select the closest AC line voltage being used and press <**Enter**>.

You will see a message indicating that parameters, based upon your choices, are being downloaded to the controller. The green LED on the DPM will stop flashing, and the number **4** will still be displayed. After the parameters have been downloaded, select **Yes** to the question "Do an NVSAVE now?" and press <**Enter**>.

The DPM has been configured as an analog velocity controller. The current loop has been compensated properly for the selected motor and the servo parameters have been setup to give medium response (approximately 75 Hz velocity loop bandwidth) with the unloaded motor. The encoder emulation output resolution has been set to the default value of 1024 lines.

Clear Status

The number 4 on the SC320/SC720 status display can now be cleared by momentarily closing the switch between the Reset/ input and Common. The status indicator should read **0** or **8** depending upon whether the controller is disabled (0) or enabled (8) and the LED indicator on the DPM will be illuminated continuously.

Enabling Controller

The controller can be enabled by closing the switch between the Enable/ input (J22-4) and Common (J22-3). The motor speed is controlled using the analog input. Because the parameters were saved in non-volatile memory, the controller can now be power cycled and, after power-up, be ready to run with the parameters established during this session.

Artisan Technology Group - Quality Instrumentation ... Guaranteed | (888) 88-SOURCE | www.artisantg.com

2.7 Using the Variables Window

Getting Help

Move to the **Controller** menu and select the **Variables** option. Under **Enter A Variable Name**, type **VELOCITY** followed by <**Enter**>. The measured motor velocity will be displayed. Vary the motor speed and press <**Enter**> again. The new velocity will be displayed. With the cursor located somewhere on the word **VELOCITY**, press the **<F1>** key for help information. The following help window is displayed:

```
File        Controller        Options        F1 - Help
 'PROJECT name' is   ownLoad to Controller   se which is NOT sent to DPM
                        Variables
          VELOCITY (variable, float, read-only)

Units:  RPM
Range:  -2.37*10^11 / ENC.OUT  to  +2.37*10^11 / ENC.OUT

Purpose:  VELOCITY indicates the actual speed at which the
  motor shaft is rotating averaged over a 136 millisecond
  interval.

Guidelines:  the computation of VELOCITY depends upon
  the value of PULSEGEAR as follows:
  = 0:  VELOCITY = 15 * ENC.FREQ * RATIO / ENC.IN
  = 1:  VELOCITY = 60 * ENC.FREQ * PULSES.OUT / PULSES.IN

                    OK

 Axis 255    C:\DPM\NONAME1.PRM
 Press F10 to alternate between Dropdown Menus and Parameter-Edit screen
PACIFIC SCIENTIFIC  DPM Setup Utility Version 1.02          8:22:13 AM
```

This type of information is available on any item displayed in the variables window. Press <**Enter**> to clear the help window.

Type ILMT.PLUS (replacing VELOCITY) followed by <**Enter**>. The default value of 100 percent is displayed for the Current Value.

To change the value of a ILMT.PLUS, press the down arrow key. The cursor moves to prompt you to **Enter a Value.** Type **90** followed by **<Enter>.** ILMT.PLUS is changed to 90%.

Artisan Technology Group - Quality Instrumentation ... Guaranteed | (888) 88-SOURCE | www.artisantg.com

2.8 Reviewing and Editing Parameters

Press the <ESC> key twice. The Parameter-Edit screen will be displayed. A line is reserved to enter a Project Name for documentation purposes. To enter a Project Name, move the highlighting bar to **PROJECT name** using the arrow keys and type **Getting Started.**

Getting Help

Similarly, a parameter can be edited by moving the highlighting bar to a parameter line and typing a new value followed by **<Enter>**. For example, move the highlighting bar to **ARF1** and press **<F1>** to get help information about the variable ARF1. The following help message is displayed:

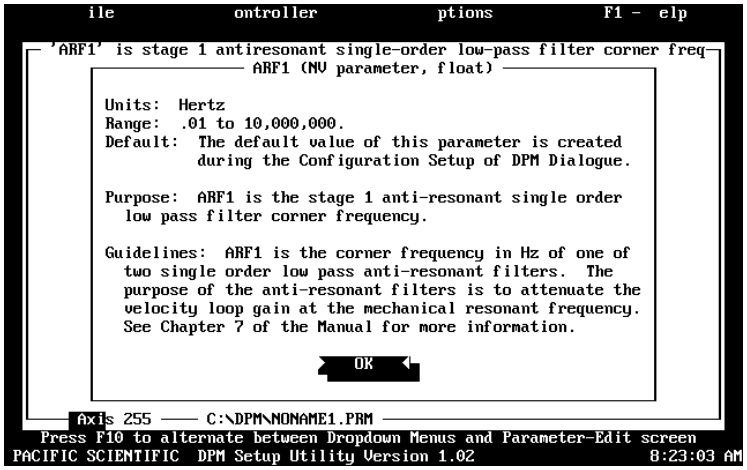

Information about all variables is available in this way.

Additional information is available in Chapter 8. The default value of ARF1 is 750.00000 hertz when medium bandwidth is selected (medium bandwidth was designated when you chose AUTO in section 2.6). Press <**Enter**> to clear the help screen, then type **150 <Enter>**. ARF1 will now have the value of 150.00000 hertz.

Note: *The value of ARF1 is 750.00000 in the DPM until these parameters are downloaded.*

Artisan Technology Group - Quality Instrumentation ... Guaranteed | (888) 88-SOURCE | www.artisantg.com

2.9 Downloading Parameters to the DPM

Press the <**F10**> key to allow selection of the pull-down menus. You will see a message:

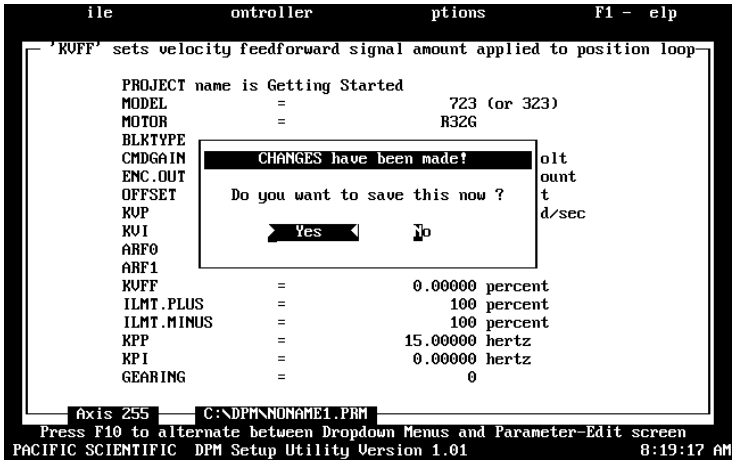

Move the highlight to **No** and press **<Enter>**. (Answering Yes will save the parameters in a disk file named "NONAME1.PRM" but we aren't ready to do this yet). Move to the **Controller** menu, select **Download to Controller** and press **<Enter>**. Select **Yes** to the question "Do you really want to DownLoad now?" and the parameters will be downloaded to the DPM. Also respond **Yes** to the question "Do an NVSAVE now?. This will save the parameters in the DPM's non-volatile memory.

2.10 Saving Parameters on Disk

Select the **File** menu, select **Save As** and press <**Enter**>. Type the File Name **STARTING.PRM** and press <**Enter**>. The parameters will be save on the hard disk in a file named STARTING.PRM.

Artisan Technology Group - Quality Instrumentation ... Guaranteed | (888) 88-SOURCE | www.artisantg.com

2.11 Opening a Disk File

Return to the **File** menu by pressing **<F10> . Select the Open** option and press **<Enter**>. Press the <**Tab**> key to move to the list of files. Use the arrow keys to select **STARTING.PRM** and press **<Enter>**. The Parameter-Edit screen for STARTING.PRM, that you just saved to disk, will be read from the disk and displayed. In this way, you can maintain a record of the controller parameters. If it is ever required to make a clone, open the file in this way and use the **DownLoad to Controller** option of the **Controller** menu to download the parameters to the new controller.

2.12 Exiting DPM Dialogue

Return to the **File** menu by pressing **<F10>** and select **Exit**. Press **<Enter>** and select **Yes** to the question "Are you SURE?". DPM Dialogue will be exited and the DOS Prompt will appear.

You should now know how to start and exit DPM Dialogue, configure your controller, edit and save parameters values, and configure a controller using parameters stored in a disk file.

Artisan Technology Group - Quality Instrumentation ... Guaranteed | (888) 88-SOURCE | www.artisantg.com

3 DPM Interfaces and Connections

In this chapter

This chapter describes the DPM's serial port (J31) and encoder/step & direction port (J32) and provides the information required to use them.

3.1 Serial Port J31

Introduction

The serial port (J31), utilizes the 9 contact female D subminiature style connector shown below. A brief description of each signal is included in the table.

J31

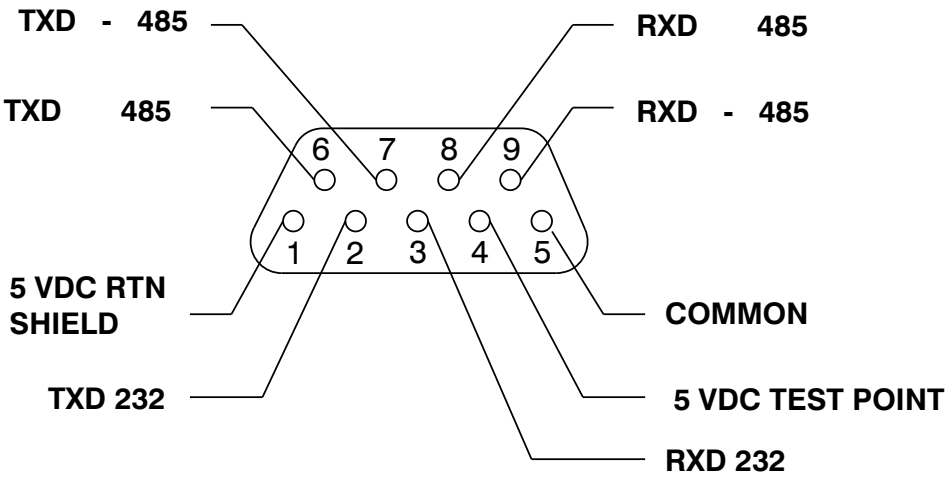

Artisan Technology Group - Quality Instrumentation ... Guaranteed | (888) 88-SOURCE | www.artisantg.com

I/O Table

Input/Output	Pin Number	Explanation
+5V Return/ Shield	J31-1	Common/shield -serial port interface
Txd 232	J31-2	RS-232 transmitter output (from DPM)
Rxd 232	J31-3	RS-232 receiver input (to DPM)
+5V dc Test Point	J31-4	221 ohm resistor in series with +5 Vdc output. **Can't be used for power.**
+5V Common	J31-5	Common-serial port interface
Txd (+) 485	J31-6	RS-485 transmitter output (from DPM)
Txd (-) 485	J31-7	
Rxd (+) 485	J31-8	RS-485 receiver input (to DPM)
Rxd (-) 485	J31-9	

The information provided in this section should be used to connect the DPM to your computer for use with DPM Dialogue (due to the communications protocol utilized**, it is not possible to operate the DPM with a dumb terminal**). Two communication links are available, RS-232 and RS-485. RS-485 allows a single computer to communicate with up to 32 DPM's in multi-axis configurations. Serial communications must be used to set the axis address (AXIS.ADDR) of each DPM. There is no DIP switch for setting the axis address on the DPM. The DPM is shipped from the factory with its axis address set to 255. DPM Dialogue defaults to communicate with axis 255 upon power-up.

Artisan Technology Group - Quality Instrumentation ... Guaranteed | (888) 88-SOURCE | www.artisantg.com

The DPM's address is changed using the RS-232 link[1] and the **Variables...** option of DPM Dialogue's **Controller Menu**. After entering the variables window, type **AXIS.ADDR <Enter>**. The default value of 255 is displayed under Current Value. Press the down arrow key and enter the new address. After a short delay, the following message is displayed:

Warning
Time-Out Waiting For Response
OK

Press <**Enter**> to clear the warning. "Communications Error!" will flash under Current Value. This is because DPM Dialogue can't communicate with the DPM since they both have different addresses. Press <**Esc**> to leave the variables window and use the arrow keys to move to the **Axis Selection** option of the **Options** menu. Press **<Enter>** to select this option and the type the axis address previously downloaded to the DPM. After pressing **<Enter>**, communication is re-established between DPM Dialogue and the DPM as both now have the same address. Either the RS-232 or RS-485 links can now be used.

IMPORTANT NOTE

The value for AXIS.ADDR must now be saved in non-volatile memory using NVSAVE so that the address will be in effect after power cycling.

1 The RS-485 can be used as long as there is no other axis 255 connected.

Artisan Technology Group - Quality Instrumentation ... Guaranteed | (888) 88-SOURCE | www.artisantg.com

RS-232 Connections

RS-232 connections on J31 are shown below. Cable wiring required for connecting to both 9 and 25 pin serial ports of most computers are also shown.

Note: *Pinouts vary among computer manufacturers. Check the hardware reference manual for your machine before wiring.*

Cabling diagram

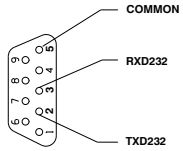

DPM
9 CONTACT FEMALE D SUBMINIATURE CONNECTOR

TYPICAL CABLES

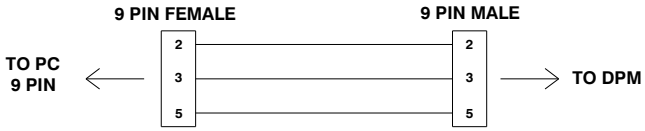

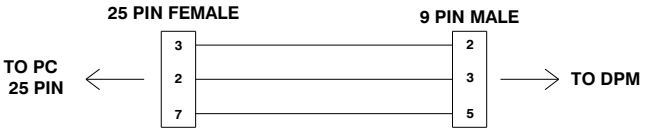

Artisan Technology Group - Quality Instrumentation ... Guaranteed | (888) 88-SOURCE | www.artisantg.com

RS-485/RS-422 Connections

Up to 32 DPMs can be connected in parallel to a multidrop master. The DPMs must each have a unique address, set using the serial link as described above. Once the address is downloaded to the DPM, the **Axis Select** function must be used to select the designated axis address. Then, either the RS-232 or the RS-485 link can be used to communicate with the selected axis.

For example, the RS-232 link can be used to completely setup and test an individual axis before connecting it into the multi-axis configuration.

RS-485/RS-422 connections to J31 are shown below. A multidrop interconnection diagram, showing multiple axes connected to a single host is also included.

Connection diagram

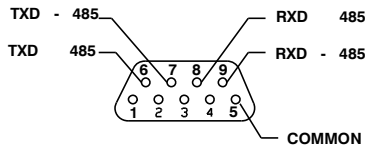

DPM
9 CONTACT FEMALE D SUBMINIATURE

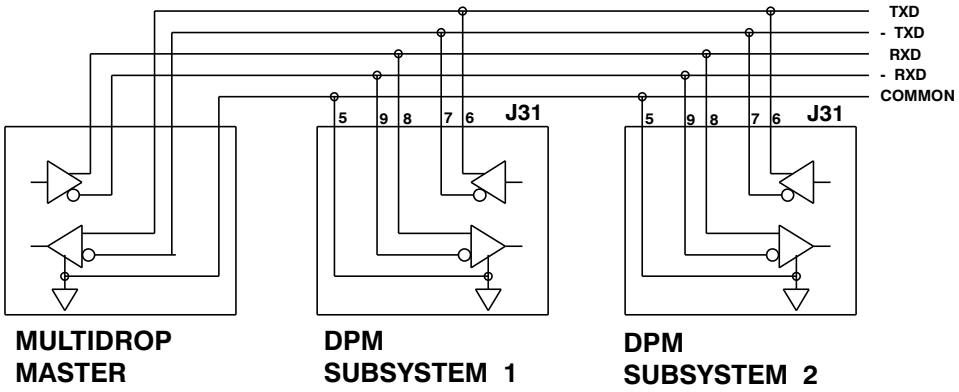

Artisan Technology Group - Quality Instrumentation ... Guaranteed | (888) 88-SOURCE | www.artisantg.com

RS-232/RS-485 converter installation

It is often convenient to use an RS-232 to 485/RS-422 converter so that an RS-232 port, available on all PCs, can be used to connect to multiple axes. The figure below shows a typical installation, using the B & B Model 422 RS-232 to RS-422 adapter. RS-232 to RS-485/RS-422 adapters are available from many sources.

IMPORTANT NOTE

The adapter cannot be powered from the DPM's serial port because J31 pin 4 is for use as a test point only. A 221 ohm resistor is in series with this output.

Installation diagram

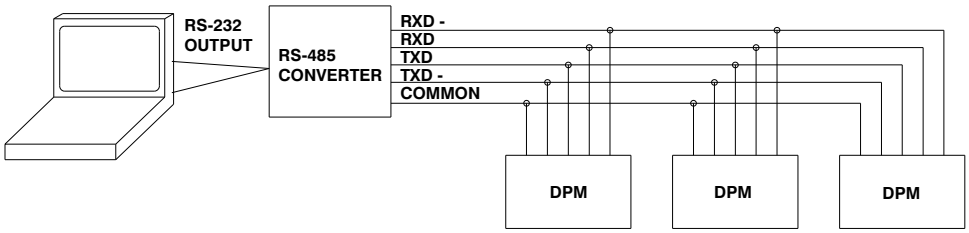

3.2 Encoder/Step & Direction Input Port J32

Introduction

The DPM allows SC320/SC720 controllers to be electronically geared to a master incremental encoder generating quadrature encoder signals or to be driven by step and direction signals typically used to drive stepper drivers. This section describes the connections and interface circuits used for both applications. Chapters 6 and 8 describe the parameters used and show how to set them for the desired operation.

Artisan Technology Group - Quality Instrumentation ... Guaranteed | (888) 88-SOURCE | www.artisantg.com

Port J32 utilizes the 4 contact Phoenix plug in terminal style connector shown below to simplify system wiring. A brief description of each signal is included in the table.

Cabling diagram

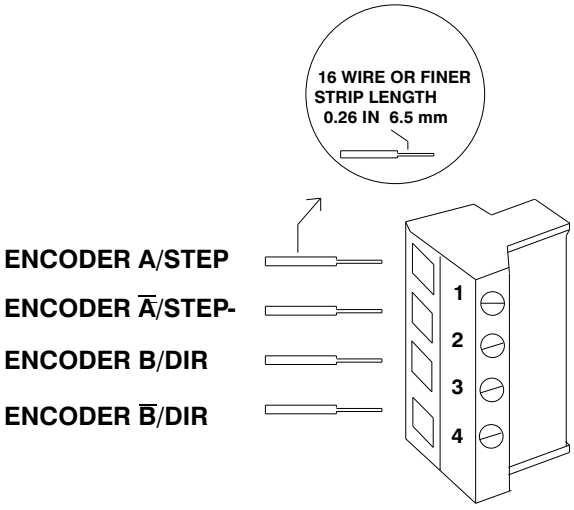

J32 CONNECTOR

Input/Output	Pin Number	Explanation
Encoder A/Step+	J32-1	Positive side of optically isolated input for Encoder A or Step
Encoder $\overline{A}$/Step-	J32-2	Negative side of optically isolated input for Encoder A or Step
Encoder B/Dir+	J32-3	Positive side of optically isolated input for Encoder B or Direction
Encoder $\overline{B}$/Dir-	J32-4	Negative side of optically isolated input for Encoder B or Direction

Artisan Technology Group - Quality Instrumentation ... Guaranteed | (888) 88-SOURCE | www.artisantg.com

Interface Circuits

The encoder/step & direction inputs are optically isolated for maximum noise immunity and system wiring simplicity. The input circuits are shown in the following diagrams along with typical connections to differential and single ended line drivers.

Note: *The drawings indicate TTL or 5 volt logic levels. If higher voltage line drivers are used (or a higher voltage supply is connected to J32-1 and J32-3 for single ended line drivers) , a resistor must be added in series with the negative inputs (J32-2 and J32-4). If 12 volt drivers are used (or +12 volts is connected to J32-1 and J32-3), install 510 ohm resistors in series with J32-2 and J32-4.*

Differential TTL Line Driver

If the encoder/step & direction signal sources are TTL differential line drivers such as the DS8830 (SC320/SC720), SC75176 (SC750), or 26LS31 (available on many encoders supplied with PacSci brushless servo motors), the following interface is recommended. The line drivers must be capable of supplying at least 6 ma with 3.5 volts across the ± inputs. This interface circuit normally provides the best noise margin of all the interface circuit options.

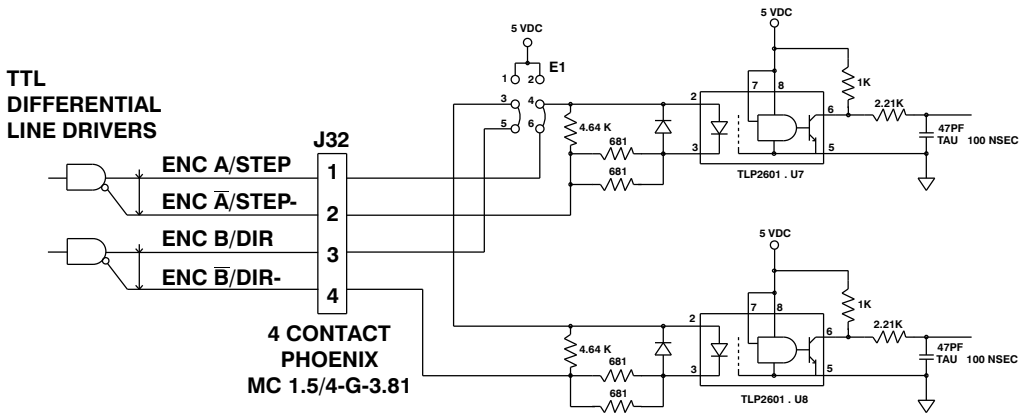

DIGITAL PERSONALITY MODULE

Artisan Technology Group - Quality Instrumentation ... Guaranteed | (888) 88-SOURCE | www.artisantg.com

Single Ended TTL Line Driver

If the signal sources are single ended TTL drivers and +5 Vdc is also available, the following interface is recommended. The driver outputs can be totem-pole or open collector and must be sinking at least 6 ma with 3.5 volts across the ± inputs.

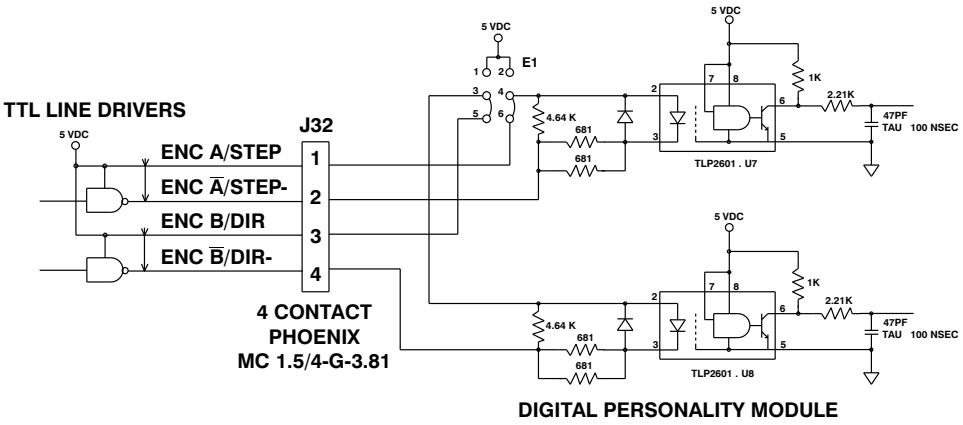

Artisan Technology Group - Quality Instrumentation ... Guaranteed | (888) 88-SOURCE | www.artisantg.com

Single Ended TTL Totem Pole Line Driver with Ground

If the signal sources are single ended TTL drivers, with high sourcing and sinking capability (open collector won't work) and a ground is available at the signal source, the following interface is recommended. The driver outputs must source at least 6 ma with 3.5 volts across the ± inputs. For the best noise margin, the ground closest to the driver's (same connector or board) should be used.

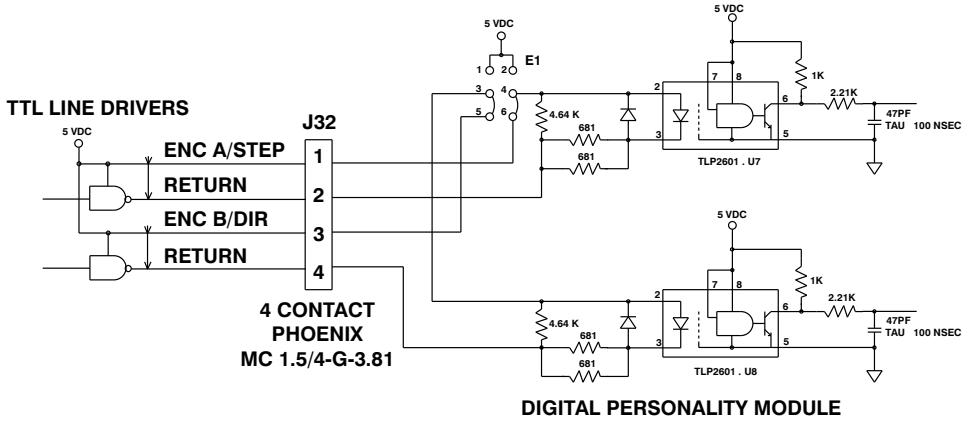

Artisan Technology Group - Quality Instrumentation ... Guaranteed | (888) 88-SOURCE | www.artisantg.com

Non-optically isolated configuration

If the driving source is single ended, has no or limited sourcing capability, and no positive voltage is available, the E1 jumpers on the DPM can be moved from the default 3-5, 4-6 positions to the 1-3, 2-4 positions. This will power the opto-isolators from the DPM. A connection from the return of the external line driver to common of the SC320/SC720 must be added as shown. This configuration **does not** provide optical isolation and is not recommended.

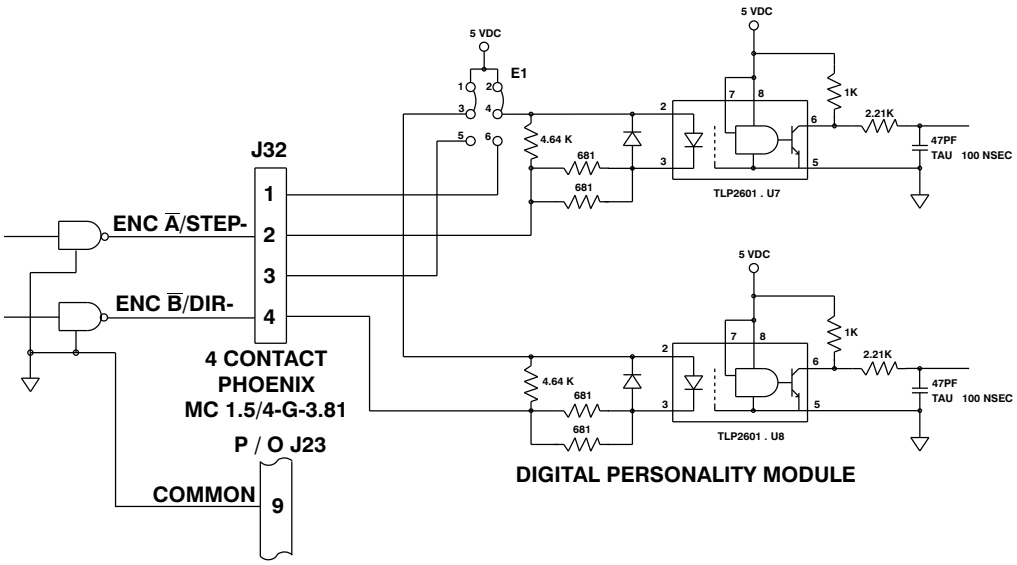

SINGLE ENDED DRIVERS - NO V AVAILABLE
NOT OPTICALLY ISOLATED NOT RECOMMENDED

Artisan Technology Group - Quality Instrumentation ... Guaranteed | (888) 88-SOURCE | www.artisantg.com

Encoder Inputs

The inputs to J32 are processed as quadrature encoder signals when the parameter STEPDIR is set to 0. Phasing for the encoder quadrature inputs for positive and negative changes to ENCPOS is shown below. ENCPOS increases by one count on each up arrow and decreases by one count for each down arrow. If ENCPOS is increasing and RATIO is positive, the servo motor controlled by the DPM will rotate in the clockwise direction, looking at the motor shaft when gearing is enabled.

Encoder Phasing

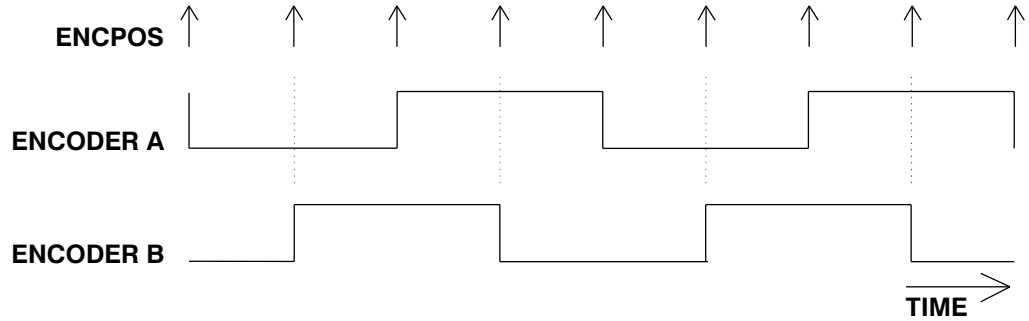

PHASING FOR INCREASING ENCPOS

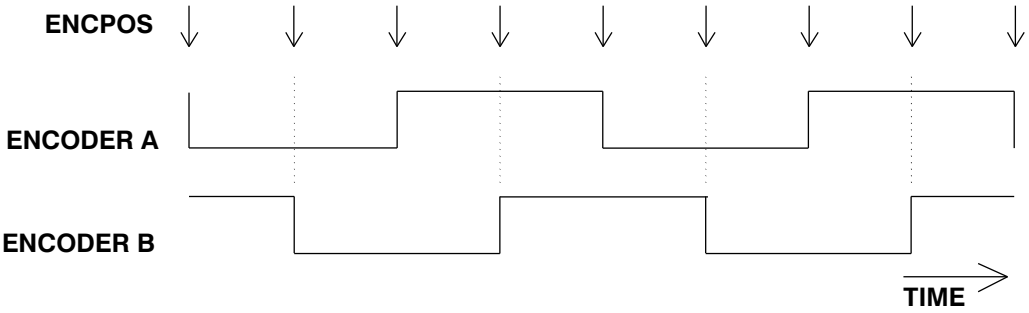

PHASING FOR DECREASING ENCPOS

Artisan Technology Group - Quality Instrumentation ... Guaranteed | (888) 88-SOURCE | www.artisantg.com

Step & Direction Inputs

The inputs to J32 are processed as step and direction signals when the parameter STEPDIR is set to 1. Each low-to-high transition of the step input then changes the variable ENCPOS by one count. ENCPOS increases (becomes more positive) if the direction line was high at the time of the transition and decreases (becomes more negative) if the direction line was low at the time of the transition. If RATIO is positive and gearing is active, the servo motor controlled by the DPM will rotate in the clockwise direction, looking at the motor shaft when steps are generated and when the direction line is high. Polarity information and timing constraints are summarized below. ENCPOS increases by one count on each up arrow and decreases by one count for each down arrow.

Note: *With all of the interface options, the step is detected when the opto photo diode turns ON, i.e. a rising edge applied to Step+ relative to Step-.*

Step & Direction Timing

Positive step pulse

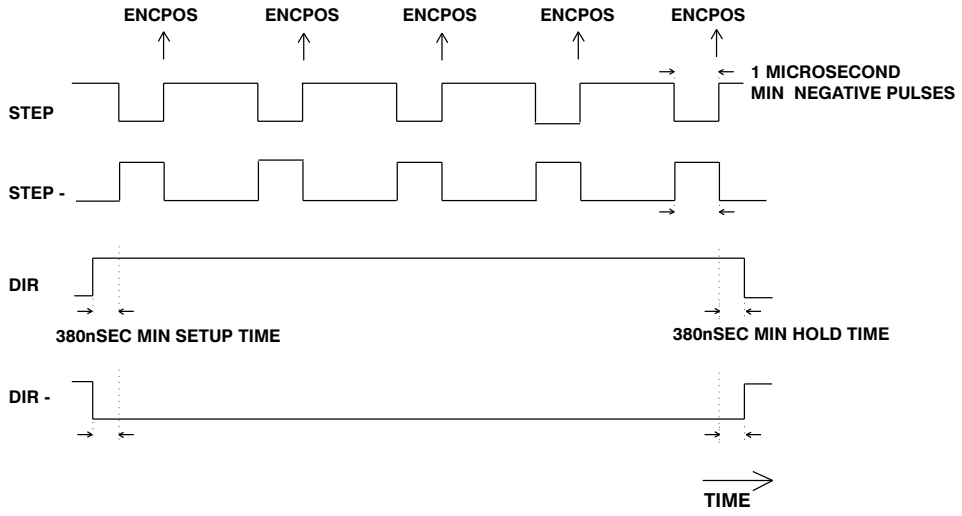

Artisan Technology Group - Quality Instrumentation ... Guaranteed | (888) 88-SOURCE | www.artisantg.com

Negative step pulse

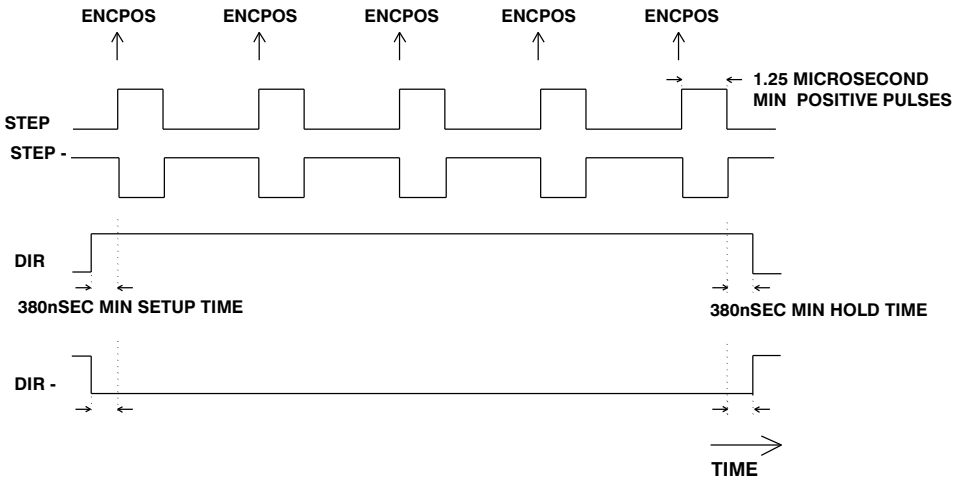

Artisan Technology Group - Quality Instrumentation ... Guaranteed | (888) 88-SOURCE | www.artisantg.com

4 Using DPM Dialogue

Introduction

This chapter defines the host PC requirements for using DPM Dialogue, provides information on setting up your controller and PC, and describes each function of the DPM Dialogue environment.

It is strongly recommended that you go through Chapter 2, “Getting Started”, before proceeding to this chapter so that you have a feel for using DPM Dialogue.

Use the instructions given in Chapter 2 to **install DPM Dialogue onto your hard drive and start it**. Also, review the section on **getting around in DPM Dialogue**.

4.1 Host PC Requirements

DPM Dialogue

To use DPM Dialogue, an IBM PC or compatible computer is required. DPM Dialogue requires a minimum of the following:

- DOS version 3.3 or later
- A 5 1/4 inch 360 KB or 3 1/2 inch 720 KB disk drive
- One serial COM port (Two if a serial port (optional) mouse is used)
- A minimum of 640 KB random-access-memory

The PC will serve as the host for initial set up and software development for the DPM. Supplied with the DPM is a software disk containing the DPM Dialogue programming environment.

Artisan Technology Group - Quality Instrumentation ... Guaranteed | (888) 88-SOURCE | www.artisantg.com

4.2 Setting Up Your Controller to Run With DPM Dialogue

Use the SC320/SC720 manual supplied with you controller for connecting to AC power, external regeneration resistor[1] if required, motor power, motor feedback, commands, encoder outputs and test points. Use Chapter 3 of this manual for connecting your PC to the DPM.

IMPORTANT NOTE

Initial communication with the DPM must utilize axis address 255. The axis address `AXIS.ADDR` is stored in non-volatile memory and is set at the factory to 255. If RS-485 communication is to be used for multi-axis applications, the serial address must be changed using the serial port and saved in non-volatile memory (there is no DIP switch for setting the axis address).

Refer to Chapter 3 for connecting an external source of quadrature encoder signals or step & direction signals to the DPM. After carefully checking all wiring, apply AC power to the controller.

If a hard disk drive is available, DPM Dialogue should be loaded onto the hard drive and run as described in Chapter 2. If DPM Dialogue must be run from the A (floppy) drive, insert the supplied disk in the A drive of your PC and type **A:DPM Enter**. The DPM Dialogue main menu should appear on your screen.

If you receive the following message:

Warning
Com# Does NOT Exist !
OK

where # is the default communications port on the DPM Dialogue disk, press **Enter** to proceed. Use the **Port Configuration...** utility of the **Options** menu to select the serial port being used as described in Section 4.5.2.

1 SC724, SC725, SC726 only.

Artisan Technology Group - Quality Instrumentation ... Guaranteed | (888) 88-SOURCE | www.artisantg.com

If you receive the following message:

Warning
The PacSci Controller Gave no Response.
Controller Version Number Cannot be Determined.
OK

press **Enter** to continue. Use the **Port Configuration...** utility of the **Options** menu to select the serial port being used as described in Section 4.5.2. If the correct port was selected, re-check the RS-232 wiring between your PC and controller.

After completion of these steps, DPM Dialogue's main menu should appear on the PC's display, superimposed upon the Parameter-Edit screen.

4.3 Introduction to the DPM Dialogue Environment

Main Menu

After starting DPM Dialogue, the main menu, superimposed upon the Parameter-Edit Screen is displayed.

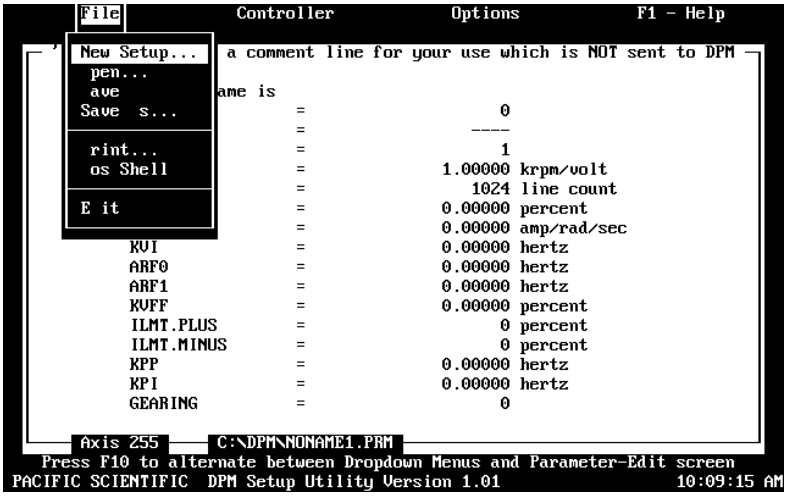

The **F10** key can be used to toggle back and forth between the main menu and the Parameter-Edit Screen.

Artisan Technology Group - Quality Instrumentation ... Guaranteed | (888) 88-SOURCE | www.artisantg.com

Menu Functions

The main menu supports the following functions:

- File
- Controller
- Options
- F1 - Help

Function table

The following table gives a brief description of the functions supported under each menu:

Note: *Each menu is "wrap-around" - one press of the appropriate arrow key will bring you from the top to the bottom of a menu.*

Menu	Function
File	**New Setup:** Recommended way to setup the parameters of an SC320/SC720 servocontroller for a new application.
	Open: Open a parameter file created earlier. Used to update or clone a controller.
	Save: Save the active file onto disk under the present name.
	Save As: Save the active file onto disk under a name to be specified.
	Print: Print the Parameters-Edit screen.
	DOS Shell: Go to the DOS prompt. Can then use DOS commands. Return to DPM Dialogue by typing **EXIT**.
	Exit: Exit DPM Dialogue.

Artisan Technology Group - Quality Instrumentation ... Guaranteed | (888) 88-SOURCE | www.artisantg.com

Menu	Function
Controller	**DownLoad to Controller:** Download the parameters on the active Parameters-Edit Screen to the DPM.
	Upload from Controller: Upload the parameters from the DPM to the Parameters-Edit Screen
	Variables...: Allow monitoring and changing DPM parameters. Also allows two Real Time Function Call Executions: NVLOAD and NVSAVE.
	Non-Volatile Memory...: NVLOAD: Load DPM's RAM (working memory) from it's non-volatile memory. NVSAVE: Save the contents of the DPM's RAM (working memory) into it's non-volatile memory).
Options	**Display:** Select between Color or Monochrome Monitor.
	Port Configuration...: Select serial communications port being used with DPM.
	Offset Calculation...: Automatically adjust the command offset to (almost) zero.
	Controller Set Up...: Allows setting up the controller from DPM Dialogue. Useful for test and evaluation but it is recommended that the **New Setup...** option of the **File** menu be used to set the final parameters of the controller.
	Unconfigure...: Returns the controller to its "unprogrammed" state. The status display will show "4" and the green LED on the DPM will flash.

Artisan Technology Group - Quality Instrumentation ... Guaranteed | (888) 88-SOURCE | www.artisantg.com

Menu	Function
Options	**Axis Selection...:** Allows communicating with DPM's having their serial address set to values other than the factory default value of 255.
	Find AXIS.ADDR: Determines the address of a DPM having an unknown address.
F1 - Help	**Index:** Provides a listing of DPM parameters and commands and a brief explanation of their usage.
	General: Provides information on the particular area of the screen that you are working in within DPM Dialogue.
	About: Provides version number for active copy of DPM Dialogue

4.4 Parameter-Edit Screen

Introduction

The Parameter-Edit screen lists all the DPM parameters which can be downloaded to the DPM using the Download utility. Each can be edited by highlighting the parameter using the arrow keys, (↑,↓) and then typing in new values. Consider this to be a worksheet for defining the value of all DPM parameters.

Note: *A description of the selected parameter is given at the top of the worksheet.*

Parameter-Edit Screen

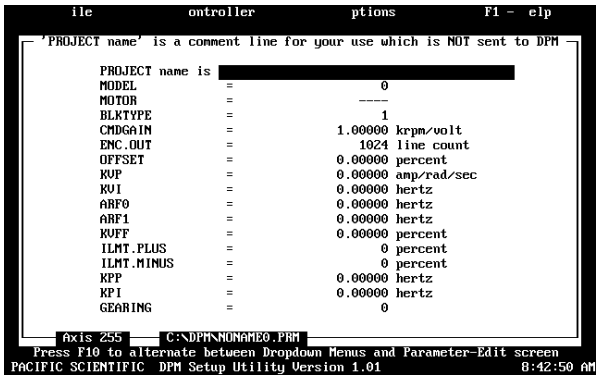

Artisan Technology Group - Quality Instrumentation ... Guaranteed | (888) 88-SOURCE | www.artisantg.com

The **New Setup** function of the **File** menu or the **Controller Set Up** option of the **Options** menu can be used to set the control loop parameters for you. The values on the Parameter-Edit screen **don't necessarily represent the values in the DPM.** In fact, immediately after starting DPM Dialogue, the displayed values bear no relationship to the DPM's contents. Only after using the **DownLoad to Controller** utility will the contents of the Parameter-Edit screen be sent to the DPM. The contents of the Parameter-Edit Screen can be set equal to the contents of the DPM by running the **UpLoad from Controller** option of the **Controller** menu.

4.5 Options Menu -Environment Set Up

Introduction

The Options Menu supports the following functions:

- Configuration of the video monitor
- Configuration of the computer's serial communication port
- Automatic adjustment of the DPM's command OFFSET
- Controller setup
- Unconfiguring the DPM (removing all setup information from it)
- Selecting the axis DPM Dialogue communicates with
- Determining the axis address (`AXIS.ADDR`) of a DPM

Procedure

To select the **Options** menu, perform the following procedure:

1. Press the **F10** key to access the pull down menu.
2. Using the arrow keys (← ,→), move the cursor to highlight **Options.**

The Options menu is now displayed on your screen.

Artisan Technology Group - Quality Instrumentation ... Guaranteed | (888) 88-SOURCE | www.artisantg.com

4.5.1 Display Set Up

Introduction

Monitor display set up allows for either monochrome or color display.

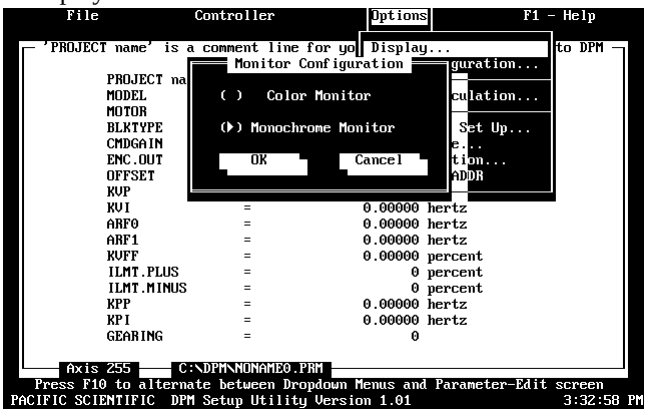

Procedure

To select **Display**, perform the following procedure:

1. Using the arrow keys (↑, ↓), move the cursor to highlight **Display** and press **Enter**. The Monitor Configuration Screen will now appear.
2. Now, using the arrow keys, (↑ ,↓), select the appropriate screen configuration “Color Monitor” or “Monochrome Monitor.”
3. <**Tab**> to OK and press **Enter**.

Note: *Set up selections will only be saved to a disk configuration file by pressing the enter key after making your selections.*

4.5.2 Communications Set Up

Introduction

The serial communications set up selects the COM Port on the PC which is used by DPM Dialogue to communicate with the servocontroller. This provides the ability to check serial I/O programmed by the user.

Note: *The Host PC will always utilize 9600 baud, one stop bit, one start bit and no parity. This is what the DPM communications format expects and how DPM Dialogue configures the PC’s serial port.*

Artisan Technology Group - Quality Instrumentation ... Guaranteed | (888) 88-SOURCE | www.artisantg.com

Port Configuration Screen

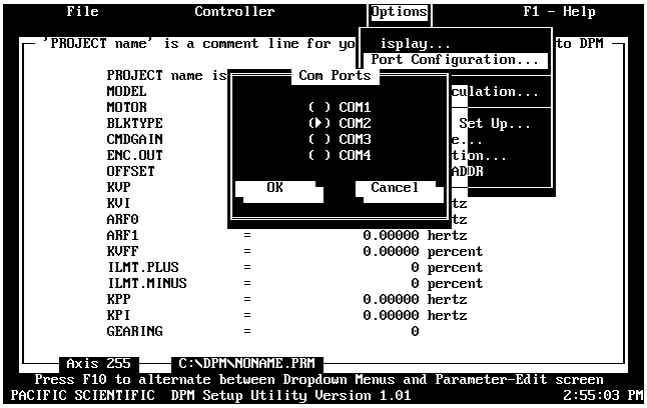

Procedure

To select **Port Configuration**, perform the following:

1. Using the arrow keys (↑ ,↓), move the cursor to highlight **Port Configuration** and press **Enter**. The Com Ports Screen will now appear.
2. Again, using the arrow keys (↑ ,↓), select the appropriate port configuration (COM1, COM2, COM3, or COM4).
3. <**Tab**> to OK and press **Enter**.

Note: *Set up selections will only be saved by pressing the enter key after making your selections.*

4.5.3 Axis Selection

This function permits selection of the multidrop subsystem address for the DPM, if multidrop is used.

Note: *The default axis when invoking DPM Dialogue is 255. This is the value of* `AXIS.ADDR` *stored in each DPM when shipped from the factory.*

Multidrop communications are supported on axes 1 through 255. Up to 32 controllers can be addressed using multidrop.

Note: *See Section 3.1, "Serial Port J31" for a detailed description of setting up new axis addresses.*

Artisan Technology Group - Quality Instrumentation ... Guaranteed | (888) 88-SOURCE | www.artisantg.com

4.5.4 Find AXIS.ADDR

Introduction

If the address of a DPM was changed from the default value of 255 and the new address was saved in non-volatile memory, communication will be impossible unless DPM Dialogue is set to the correct Axis using the **Axis Selection...** utility described above. This could cause considerable difficulty if the address of a DPM is unknown. Fortunately, the utility **Find AXIS.ADDR** can be used to determine the address of a DPM having an unknown address.

Procedure

1. Connect the PC's RS-232 port to the RS-232 port of the DPM.
2. Press the **F10** key to access the pull down menu.
3. Using the arrow keys (← ,→), move the cursor to highlight **Options.**
4. Using the arrow keys (↑ ,↓), move the cursor to highlight **Find AXIS.ADDR** and press **Enter**.

The `AXIS.ADDR` of the SC320/SC720 is displayed. Press **Enter** to continue.

4.5.5 Controller Set Up...

Introduction

Controller Set Up allows simple setup of the servocontroller's gain parameters. The functionality of this option is very similar to that of the **New Setup...** option of the **File** menu. Controller Set Up allows quick testing of a controller without creating a disk file. New Setup is intended to be used when documentation of the controller's parameters, in the form of a disk file, is required.

Procedure

To perform a controller setup, perform the following procedure:

1. Press the **F10** key to access the pull down menu.
2. Using the arrow keys (← ,→), move the cursor to highlight **Options**.

Artisan Technology Group - Quality Instrumentation ... Guaranteed | (888) 88-SOURCE | www.artisantg.com

3. Using the arrow keys (↑, ↓), move the cursor to highlight **Controller Setup...** and press **Enter**.

4. DPM Dialogue prompts you to select Auto or Manual Setup Mode. Auto sets the servo parameters for “medium” bandwidth. Manual allows selection of “gentle”, “medium” or “stiff” controller bandwidths. Manual mode also allows compensation for load inertia (in addition to the motor-plus-resolver). In general, response times become shorter and shaft stiffness increases moving from gentle to stiff.

   Selecting Auto results in satisfactory operation in many applications. However, Manual Setup must be used in applications where the load inertia is large compared to the motor-plus-resolver inertia or where very fast response times are required.

IMPORTANT NOTE

If the load inertia is more than twice the motor-plus-resolver inertia, then Manual should be selected and the load inertia entered as described in Step 6 of this section.

Note: *Please refer to Chapter 7 for a more complete description of servo tuning using the DPM.*

The remainder of this section will go though the Controller Set Up procedure as if **Manual** were selected. Screens which don’t appear for **Auto** are pointed out.

Use the **Tab** or **arrow keys** to select **Manual** and press **Enter**.

5. You are prompted to enter the first four digits of your motor part number. Enter the first four digits and press **Enter**. For example:

   R32G <Enter>

   This information is used to set the current loop proportional gain (`KIP`) and pole count (`POLECOUNT`). It also lets DPM Dialogue determine the motor’s inertia and torque constant which are needed to calculate the velocity loop proportional gain.

Artisan Technology Group - Quality Instrumentation ... Guaranteed | (888) 88-SOURCE | www.artisantg.com

Non-standard motors

If you selected a motor that is not in DPM Dialogue's catalog (for example R32S), you will receive a warning indicating that the motor part number could not be located and asking you if you want to re-enter it. If you are sure you entered the correct number use the Tab or arrow keys to select **No** and press **Enter**.

Note: *This procedure can be used for PacSci brushless servo motors having non-standard windings but not for motors from other manufacturers having different resolver alignment. The DPM cannot compensate for non-standard resolver alignments. Also, the DPM will only work with 4 or 8 pole motors.*

6. Motor data will be displayed in the format shown below.

Note: *If Auto was selected, the Motor Data Screen is only displayed if a motor not in DPM Dialogue's catalog is selected.*

Motor Data screen

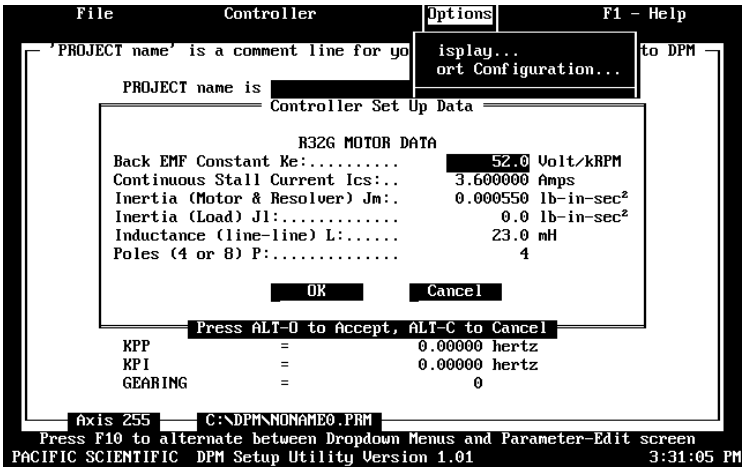

If a motor was selected that was not in DPM Dialogue's catalog (indicated by the warning message), then enter the correct values for each parameter in the Motor Data Screen. Simply type the correct value for the highlighted item and press **Enter.**

Artisan Technology Group - Quality Instrumentation ... Guaranteed | (888) 88-SOURCE | www.artisantg.com

Compensating for load inertia

To compensate for load inertia in addition to the motor-plus-resolver, enter the value for the load inertia in the line labeled **Load Inertia (Motor & Resolver) J_L:...**. DPM Dialogue will adjust the velocity loop proportional gain (KVP) to provide the selected bandwidth with the loaded motor.

Use the **Tab**, **arrow keys**, or **Enter** to select **OK** and press **Enter** to accept the values.

7. You are prompted for the model number of your controller. Use the arrow keys (↑,↓) to select the correct model and press **Enter**.

8. You are prompted for the AC line voltage closest to that being used for the bus supply (The current loop proportional gain (KIP) is increased 20% and the velocity loop proportional and integral gains are decreased by 17% by the set up utilities when the bus supply is 110 volts AC.). Use the arrow keys (↑, ↓) to select either 220 volts AC or 110 volts AC as appropriate and press **Enter.**

Selecting Bandwidth

9. (This step is omitted if **Auto** was selected in step 4) You are prompted for the desired bandwidth. If quick performance is not required or if the system mechanics are poor (1: Belt or soft coupling between motor and load and load inertia is more than three times motor inertia or 2: Any time load inertia is more than ten times motor inertia) select **Gentle**. If fast performance is required and the system mechanics are not poor, select **Medium**. If very fast response is required and the system mechanics are excellent (stiff coupling between motor and load and approximately 1 : 1 inertia match), select **Stiff**.

   Select the desired bandwidth with the arrow keys and press **Enter**.

Artisan Technology Group - Quality Instrumentation ... Guaranteed | (888) 88-SOURCE | www.artisantg.com

10. You will receive a message indicating that the parameters are being downloaded to the controller. You will then be asked whether you wish to save the values into non-volatile memory:

RECOMMENDATION
Do an NVSAVE now?
Yes No

Selecting **Yes** will store the values in the DPM's non-volatile memory. If **No** is selected, the controller can still be run with the downloaded values but they will be lost after a power cycle and replaced by the contents of non-volatile memory.

Regardless of which choice is made, the Parameter-Setup Screen will reflect the values determined by the **Controller Set Up...** utility. The Parameter-Setup Screen can be selected by pressing **F10**. The value of any parameter can be changed by using the arrow keys to move to the selected line and typing a new value followed by **Enter**.

The contents of the Parameter-Edit Screen can be downloaded to the controller using the **Download to Controller** utility or stored on disk using the SAVE or SAVE AS utilities.

Artisan Technology Group - Quality Instrumentation ... Guaranteed | (888) 88-SOURCE | www.artisantg.com

The following parameters are set to their default values (their values are not affected by your choices during Set Up). If you wish to change their value, use the edit feature of the Parameter-Edit screen and then download the values to the controller.

Default values

Parameter	Default
BLKTYPE	1
ENC.OUT	1024 line count
OFFSET	0 percent
ILMT.PLUS	100 percent
ILMT.MINUS	100 percent
GEARING	0
RATIO	1
PULSEGEAR	0
PULSES.IN	1 encoder count
PULSES.OUT	1 resolver count
ENC.IN	1024 line count
STEPDIR	0

Once the Parameter-Edit screen is correct, it can be downloaded to the controller as described in Section 4.7.1 and/or saved on disk as described in Sections 4.6.3 and 4.6.4.

4.5.6 Unconfiguring the Controller

Unconfiguring the controller effectively removes all setup information and returns the controller to the unprogrammed state.

Artisan Technology Group - Quality Instrumentation ... Guaranteed | (888) 88-SOURCE | www.artisantg.com

Procedure

To unconfigure your controller, perform the following:

1. Using the arrow keys (↑ ,↓), move the cursor to highlight **Unconfigure** and press **Enter**.
2. DPM Dialogue will now prompt you with the following “Are you sure you want to unconfigure the controller?” If yes, press **Enter** to continue.
3. To ensure that you do not inadvertently erase the configuration settings, DPM Dialogue will display the screen below. To continue the unconfigure process type “Yes”, <**Tab**> to OK, and press **Enter**.

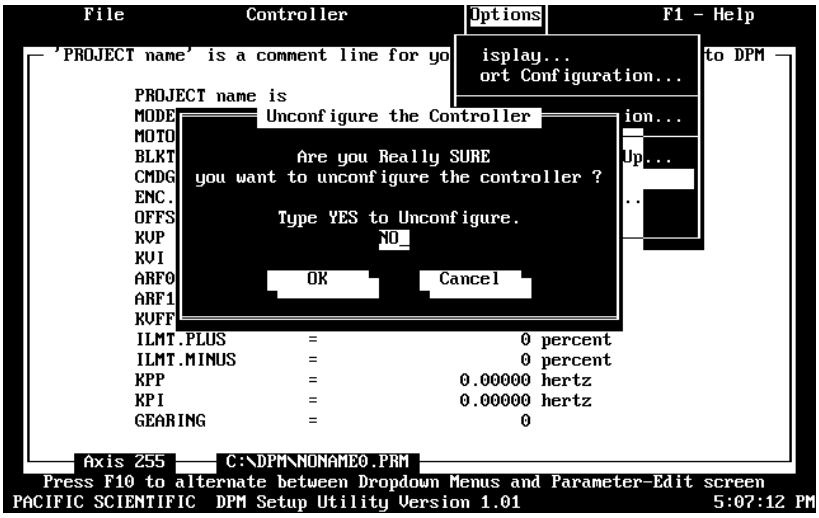

4.5.7 Zeroing the Command OFFSET

The OFFSET Calculation.... utility automates adjusting command offset to (nearly) zero. The **OFFSET Calculation...** utility can be used for all three blocktypes: torque block, velocity block, position block.

Artisan Technology Group - Quality Instrumentation ... Guaranteed | (888) 88-SOURCE | www.artisantg.com

Procedure

To use the OFFSET Calculation Utility, perform the following:

1. Make sure that the controller's parameters have been setup for the desired configuration (blocktype) and the **controller is disabled** before using the **OFFSET Calculation...** utility.

2. Use the arrow keys (↑ ,↓) to select **OFFSET Calculation...** and press **Enter**.

3. You will be prompted to command zero speed and then hit **Enter**. This does not necessarily mean that the voltage between J22-1 and J22-2 is zero but the command source (Motion Card, CNC, etc.) should be commanding zero speed.

4. After pressing **Enter**, a message will appear indicating that OFFSET is being computed.

   After a few seconds, if the motor was stationary during the measurement, the following message will appear:

   Calculated OFFSET [-]#.######
   There was no change in POSITION;
   now setting OFFSET
   OK

   Press **Enter** to accept the OFFSET correction. The value for OFFSET will be downloaded to the controller. It will <u>not</u>, however, be loaded into the DPM's non-volatile memory unless the an **NVSAVE** command is given using the **Non-Volatile Memory...** utility of the **Controller** menu.

Artisan Technology Group - Quality Instrumentation ... Guaranteed | (888) 88-SOURCE | www.artisantg.com

4.6 File Menu -Configuration Management

Introduction

The File menu allows you to perform the following functions:

- Setup a new parameter file
- Open an existing parameter file
- Save an existing parameter file
- Save a new parameter file
- Print a parameter file
- Use DOS commands without leaving DPM Dialogue
- Exit DPM Dialogue

File menu screen

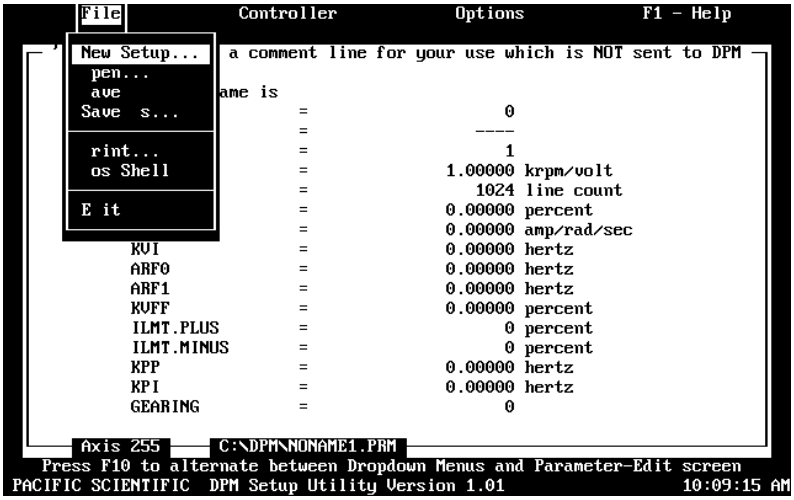

Procedure

To select the **File** menu, perform the following procedure:

1. Press the F10 key to access the pull down menu.
2. Using the arrow keys (← ,→), move the cursor to highlight **File**.
3. Using the arrow keys (↑ , ↓), move the cursor to highlight the appropriate menu selection and press **Enter**.

Artisan Technology Group - Quality Instrumentation ... Guaranteed | (888) 88-SOURCE | www.artisantg.com

4.6.1 Creating a Parameter File

To create a parameter file, select the **New Setup** option of the File menu.

Warning

Creating a parameter file automatically deletes the Parameter-Edit parameters currently displayed.

New Setup Screen

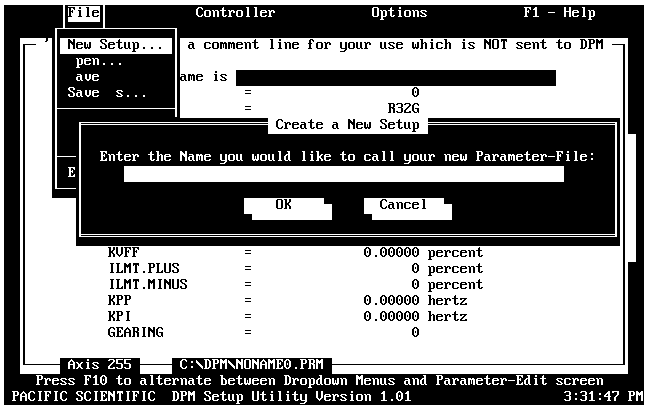

Procedure

To perform a new setup, perform the following procedure:

1. Press the **F10** key to access the pull down menu.
2. Using the arrow keys (← ,→), move the cursor to highlight **File**.
3. Using the arrow keys (↑ ,↓), move the cursor to highlight **New Setup** and press **Enter**.
4. DPM Dialogue prompts you for the name of the parameter file you wish to create. Type in the name then press **Enter** or **Tab** to move to OK, and press **Enter**. The name you have selected will appear in the name window at the bottom of your screen.

Artisan Technology Group - Quality Instrumentation ... Guaranteed | (888) 88-SOURCE | www.artisantg.com

5. DPM Dialogue prompts you to select Auto or Manual Setup Mode. Auto sets the servo parameters for “medium” bandwidth. Manual allows selection of “gentle”, “medium” or “stiff” controller bandwidths. Manual mode also allows compensation for load inertia (in addition to the motor-plus-resolver). In general, response times become shorter and shaft stiffness increases while moving from gentle to stiff.

   Selecting Auto results in satisfactory operation in many applications. However, Manual Setup must be used in applications where the load inertia is large compared to the motor-plus-resolver inertia or where very fast response times are required.

IMPORTANT NOTE

If the load inertia is more than twice the motor-plus-resolver inertia, then Manual should be selected and the load inertia entered as described in Step 7 of this section.

Note: *Please refer to Chapter 7 for a more complete description of servo tuning using the DPM.*

The remainder of this section will go though the Controller Set Up procedure as if **Manual** were selected. Screens which do not appear for **Auto** are pointed out.

Use the **Tab** or **arrow keys** to select **Manual** and press **Enter**.

6. You are prompted to enter the first four digits of your motor part number. Enter the first four digits and press **Enter**. For example:

   R32G <Enter>

   This information is used to set the current loop proportional gain (`KIP`) and pole count (`POLECOUNT`). It also lets DPM Dialogue determine the motor’s inertia which is needed to calculate the velocity loop proportional gain.

Artisan Technology Group - Quality Instrumentation ... Guaranteed | (888) 88-SOURCE | www.artisantg.com

Non-standard motors

If you selected a motor that is not in DPM Dialogue's catalog (for example an R32S), you will receive a warning indicating that the motor part number could not be located and asking you if you want to re-enter it. If you are sure you entered the correct number use the **Tab** or **arrow keys** to select **No** and press **Enter**.

Note: *This procedure can be used for PacSci brushless servo motors having non-standard windings but not for motors from other manufacturers having different resolver alignment. The DPM cannot compensate for non-standard resolver alignments. Also, the DPM will only work with 4 or 8 pole motors.*

7. Motor data will be displayed in the format below.

Note: *If Auto was selected, the Motor Data Screen is only displayed if a motor not in DPM Dialogue's catalog is selected.*

Motor Data screen

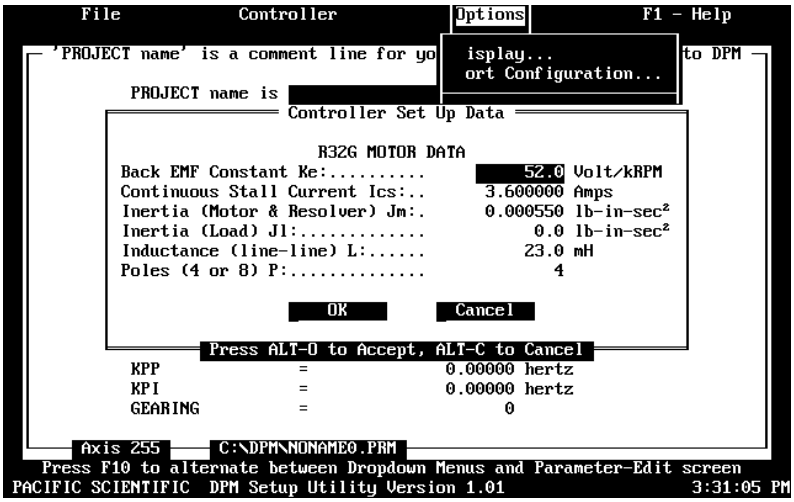

Artisan Technology Group - Quality Instrumentation ... Guaranteed | (888) 88-SOURCE | www.artisantg.com

If a motor was selected that was not in DPM Dialogue's catalog (indicated by the warning message), then enter the correct values for each parameter in the Motor Data Screen. Simply type the correct value for the highlighted item and press **Enter**.

Compensating for load inertia

To compensate for load inertia in addition to the motor-plus-resolver, enter the value for the load inertia in the line labeled **Load Inertia (Motor & Resolver) J_L:...**. DPM Dialogue will adjust the velocity loop proportional gain (KVP) to provide the selected bandwidth with the loaded motor.

Use the **Tab**, **arrow keys**, or **Enter** to select **OK** and press **Enter** to accept the values.

8. You are prompted for the model number of your controller. Use the arrow keys (↑ ,↓) to select the correct model and press **Enter**.

9. You are prompted for the AC line voltage closest to that being used for the bus supply (The current loop proportional gain (KIP) is increased 20% and the velocity loop proportional and integral gains are decreased by 17% by the set up utilities when the bus supply is 110 volts AC). Use the arrow keys (↑ , ↓) to select either 220 volts AC or 110 volts AC as appropriate and press **Enter.**

Selecting Bandwidth

10. (This step is omitted if **Auto** was selected in step 4) You are prompted for the desired bandwidth. If quick performance is not required or if the system mechanics are poor (1: Belt or soft coupling between motor and load and load inertia is more than three times motor inertia or 2: Any time load inertia is more than ten times motor inertia) select **Gentle**. If fast performance is required and the system mechanics are not poor, select **Medium**. If very fast response is required and the system mechanics are excellent (stiff coupling between motor and load and approximately 1 : 1 inertia match), select **Stiff**.

    Select the desired bandwidth with the **arrow keys** and press **Enter**. DPM Dialogue will set all of the control loop gain parameters in the Parameters-Edit Screen currently displayed.

    Note: *These values have not yet been downloaded to the DPM.*

Artisan Technology Group - Quality Instrumentation ... Guaranteed | (888) 88-SOURCE | www.artisantg.com

As described earlier, you may edit any of these parameters . The following parameters are set to default values which are not dependent upon the choices made during the New Setup procedure. They should be checked to insure they are set to give the desired functionality and performance and edited as necessary:

Default values

Parameter	Default
BLKTYPE	1
ENC.OUT	1024 line count
OFFSET	0 percent
ILMT.PLUS	100 percent
ILMT.MINUS	100 percent
GEARING	0
RATIO	1
PULSEGEAR	0
PULSES.IN	1 encoder count
PULSES.OUT	1 resolver count
ENC.IN	1024 line count
STEPDIR	0

Once the Parameter-Edit screen is correct, it can be downloaded to the controller as described in Section 4.7.1 and/or saved on disk as described in Sections 4.6.3 and 4.6.4.

Artisan Technology Group - Quality Instrumentation ... Guaranteed | (888) 88-SOURCE | www.artisantg.com

4.6.2 Opening a Parameter File

DPM Dialogue allows you to load an existing Parameter file into the Parameter-Edit screen.

Open screen

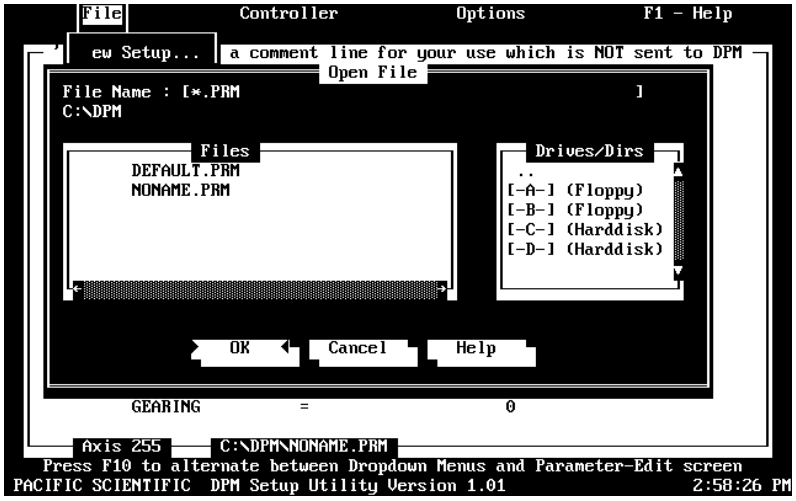

Procedure

To "open" an existing file, perform the following:

1. Press the **F10** key to access the pull down menu.
2. Using the arrow keys, (← ,→)move the cursor to highlight **File**.
3. Using the arrow keys, (↑ ,↓) move the cursor to highlight **Open** and press **Enter**.
4. Enter the name of the file to be loaded and press **Enter**.

Note: *If you do not know the name of the file to be loaded, <**Tab**> to the "Drives/Dirs" box and select the correct directory. A list of file names will appear in the "Files" box. <**Tab**> to the files box, and using the arrow keys (↑ ,↓), move the cursor to highlight the desired file name and press **Enter**.*

Artisan Technology Group - Quality Instrumentation ... Guaranteed | (888) 88-SOURCE | www.artisantg.com

4.6.3 Saving a Parameter File

Introduction

Use Save Parameter File to save the parameter file currently in the edit screen as the filename specified in the filename window. Use the Save As selection to save the current parameter file under a new filename.

Procedure

To save a parameter file, perform the following procedure:

1. Press the F10 key to access the pull down menu.
2. Using the arrow keys, (← ,→)move the cursor to highlight **File**.
3. Using the arrow keys, (↑ , ↓) move the cursor to highlight **Save** and press **Enter**.

Note: *Only use the save command for parameter files that have already been named. For new parameter files, you must use the "Save As" function.*

4.6.4 Save As Parameter File

Introduction

When a new parameter file has been created, or you wish to save a parameter file under a different name, the Save As function must be used.

Procedure

To save a new file, perform the following procedure:

1. Press the **F10** key to access the pull down menu.
2. Using the arrow keys, (← ,→) move the cursor to highlight **File**.
3. Using the arrow keys, (↑ , ↓) move the cursor to highlight **Save As** and press **Enter**.
4. Enter the parameter file name and press **Enter**.

Note: *If you wish to save the parameter file in a directory other than the default directory, <**Tab**> to the "Drives/Dirs" box and select the correct directory.*

Artisan Technology Group - Quality Instrumentation ... Guaranteed | (888) 88-SOURCE | www.artisantg.com

4.6.5 Printing a Parameter File

Procedure

To print a parameter file that is currently in DPM Dialogue, perform the following:

1. Press the **F10** key to access the pull down menu.
2. Using the arrow keys, (← ,→) move the cursor to highlight **File**.
3. Using the arrow keys, (↑ ,↓) move the cursor to highlight **Print** and press **Enter**.

4.6.6 Shelling to DOS

Procedure

To shell to DOS from DPM Dialogue, perform the following:

1. Press the **F10** key to access the pull down menu.
2. Using the arrow keys, (← ,→) move the cursor to highlight **File**.
3. Using the arrow keys, (↑ ,↓) move the cursor to highlight **DOS Shell** and press **Enter**.
4. To return to the DPM Dialogue screen, type **exit** at the DOS prompt.

4.6.7 Exiting from DPM Dialogue

Procedure

To exit from DPM Dialogue, perform the following:

1. Press the **F10** key to access the pull down menu.
2. Using the arrow keys, (← ,→) move the cursor to highlight **File**.
3. Using the arrow keys, (↑ ,↓) move the cursor to highlight **Exit** and press **Enter**.
4. DPM Dialogue asks you if you are sure you would like to exit. If yes, press **Enter**.

Artisan Technology Group - Quality Instrumentation ... Guaranteed | (888) 88-SOURCE | www.artisantg.com

4.7 Controller Menu

Introduction

The Controller Menu allows the following:

- Parameter data to be downloaded and uploaded from the DPM.
- The contents of the DPM's working memory (RAM) to be loaded into non-volatile memory.
- The contents of the DPM's non-volatile memory to be loaded into RAM.
- DPM variables and parameters to be monitored and (if not read-only) changed.

Procedure

To select the **Controller** menu, perform the following procedure:

1. Press the **F10** key to access the pull down menus.
2. Using the arrow keys, (← ,→) move the cursor to highlight **Controller.**
3. Using the arrow keys (↑ ,↓), move the cursor to highlight the appropriate menu selection and press **Enter**.

4.7.1 Downloading the Parameter-Edit Screen Contents to the Controller

Procedure

To download the contents of the Parameter-Edit screen to the DPM, perform the following procedure:

Note: *The **Download to Controller** utility will download parameter values but not the Project Name or End comment. These are stored on disk when using the **Save** or **Save As** utilities of the **File** menu.*

1. Press the **F10** key to access the pull down menus.
2. Using the arrow keys, (← ,→) move the cursor to highlight **Controller**.
3. Using the arrow keys, (↑ ,↓) move the cursor to highlight **DownLoad to Controller** and press **Enter**.

Artisan Technology Group - Quality Instrumentation ... Guaranteed | (888) 88-SOURCE | www.artisantg.com

4. You will receive a warning asking you if you really want to download now. Use the **Tab**, or **arrow keys** to select **Yes** and press **Enter**.

5. A message will appear indicating that the download is in process. Once the download is complete, you will be asked whether the parameter values should be placed into non-volatile memory:

   RECOMMENDATION
   Do an NVSAVE now?
   Yes No

   Select **Yes** and press **Enter** if you want the parameter values to be stored in non-volatile memory (they will then be active even after controller power is cycled). Otherwise, use the **Tab** or **arrow keys** to select **No** and press **Enter**.

4.7.2 Uploading Parameter from the Controller

Procedure

To upload parameter and variable values from the DPM, perform the following procedure:

1. Press the **F10** key to access the pull down menus.

2. Using the arrow keys, (← ,→) move the cursor to highlight **Controller**.

3. Using the arrow keys, (↑ ,↓) move the cursor to highlight **UpLoad from Controller** and press **Enter**. A message will be displayed indicating the upload is in process.

Artisan Technology Group - Quality Instrumentation ... Guaranteed | (888) 88-SOURCE | www.artisantg.com

4. When the upload is complete, the following message will be displayed:

Working File has CHANGED!
Do you want to save this now?
Yes No

If you want to save the uploaded parameters in a disk file at this time, use the **Tab** or arrow keys to select **Yes**. The following screen will be displayed:

Upload Parameters Screen

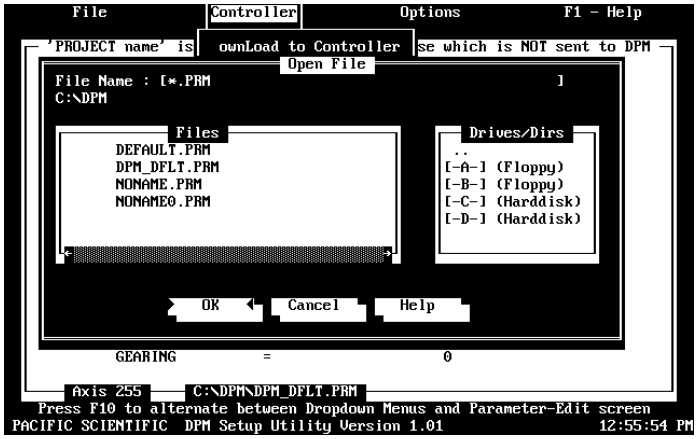

Type the name of file followed by **Enter**. If the desired file name is displayed in the File window, use the **Tab** key to move to the File window; then use the arrow keys to select the desired name and press **Enter**.

The contents of the Parameter-Edit screen will be stored on disk under the selected file name.

Artisan Technology Group - Quality Instrumentation ... Guaranteed | (888) 88-SOURCE | www.artisantg.com

4.7.3 Saving the Contents of DPM RAM to Non-Volatile Memory and Loading RAM from Non-Volatile Memory

When power is first applied to the DPM, parameter values, saved in non-volatile memory, are loaded into the DPM's working memory or RAM. The RAM values are then used during normal DPM operation.

When parameter values are downloaded to the DPM, they are stored in RAM and not transferred to non-volatile memory. The **NVSAVE** command can be used to store the contents of RAM into non-volatile memory. Similarly, the **NVLOAD** command can be used to load RAM from non-volatile memory.

Procedure

To save the contents of RAM into non-volatile memory or to load RAM from non-volatile memory, perform the following procedure:

1. Press the **F10** key to access the pull down menus.
2. Using the arrow keys, (← ,→) move the cursor to highlight **Controller**.
3. Using the arrow keys, (↑ ,↓) move the cursor to highlight **Non-Volatile Memory** and press **Enter**. The following screen will be displayed:

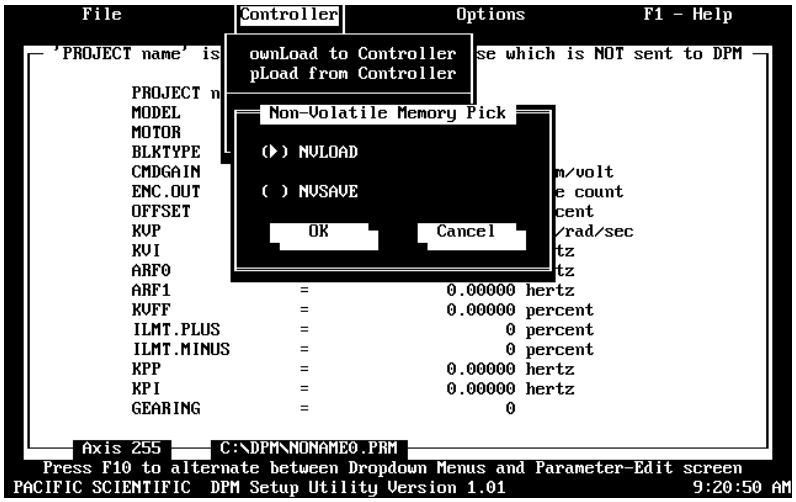

Artisan Technology Group - Quality Instrumentation ... Guaranteed | (888) 88-SOURCE | www.artisantg.com

4. To load RAM from non-volatile memory, use the arrow keys to select **NVLOAD** and press **Enter**. You will receive a brief message indicting that non-volatile memory is being copied to volatile memory, then a message indicating the `NVLOAD` is complete before returning to the **Non-Volatile Memory Pick** screen.

5. To save the contents of RAM into non-volatile memory, use the arrow keys to select **NVSAVE** and press **Enter**. You will see a brief message indicating that non-volatile memory is being copied from volatile memory, and then a message indicating the NVSAVE is complete before returning to the **Non-Volatile Memory Pick** screen.

WARNING

The NVRAM utilized is rated to allow 100,000 write cycles. This is more than is needed, however, rapid use of NVSAVE from a host computer should be avoided.

4.7.4 Monitoring/Changing Variables and Parameters

IMPORTANT NOTE

The order in which parameters are set can be significant. For example, if `TACHSCALE` is changed after `CMDGAIN` in the velocity loop configuration (`BLKTYPE` = 1), `CMDGAIN` will change within the DPM from the value in effect before changing `TACHSCALE`. The following rules should be followed to avoid these problems:

- Select the model and motor type using Controller Setup or New Setup before setting `KIP` or `KVP`.
- Set `BLKTYPE` and `TACHSCALE` before `CMDGAIN`.
- Set `ENC.IN` and `ENC.OUT` before `RATIO`, `KPP`, or `KVFF`.

Introduction

The **Variables...** utility of the **Controller** menu allows DPM variables and parameters to be monitored and changed (except for read-only variables). The **NVLOAD** and **NVSAVE** commands can also be issued from the **Variables...** utility.

Artisan Technology Group - Quality Instrumentation ... Guaranteed | (888) 88-SOURCE | www.artisantg.com

Procedure

To monitor or change the value of DPM parameters or variables, perform the following procedure:

1. Press the **F10** key to access the pull down menus.
2. Using the arrow keys, (← ,→) move the cursor to highlight **Controller**.
3. Using the arrow keys, (↑ ,↓) move the cursor to highlight **Variables** and press **Enter**. The following screen will be displayed:

Variable window

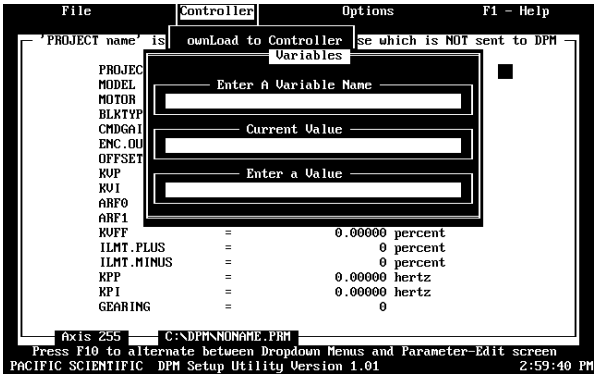

4. Type the variable or parameter name of interest. For example, type **KVP** and press **Enter**. The following screen appears:

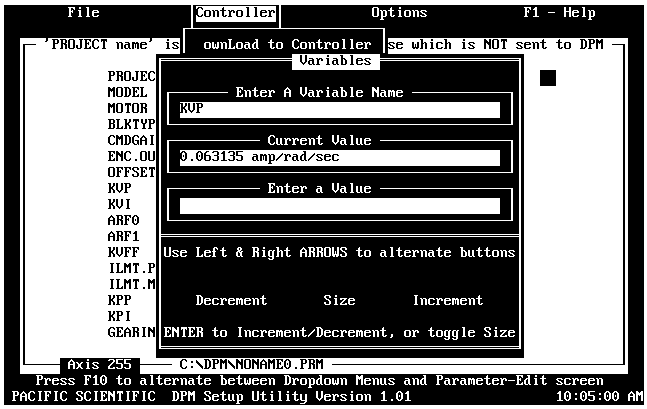

Note: *The current value of KVP in the DPM is displayed (not necessarily the value on the Parameters-Edit screen).*

Artisan Technology Group - Quality Instrumentation ... Guaranteed | (888) 88-SOURCE | www.artisantg.com

Getting Help

5. To refresh you memory about the parameter KVP, press the help key **F1**. The following information about KVP will be displayed:

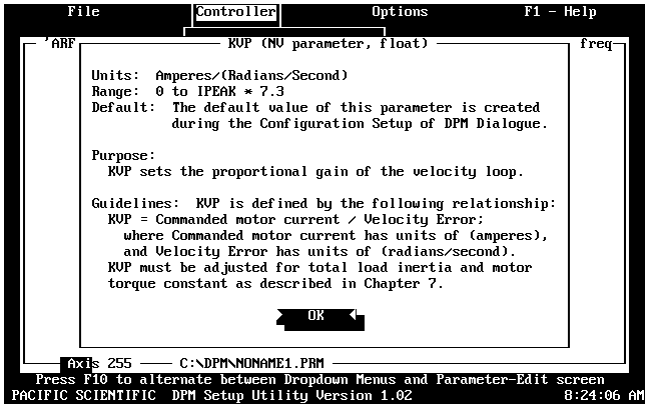

Press **Enter** to remove the help information and return to the previous screen.

Changing Values

6. To change the value of KVP, press the down arrow key. Note that the cursor is now in the bottom window labeled **Enter a Value**. A new value for KVP can now be typed followed by **Enter**.

Increment/ Decrement

An alternative method can be used to make small changes to parameter values. This is especially useful for servo tuning or adjusting command offset manually. Use the down arrow key to move to the display at the bottom of the screen:

Use Left & Right ARROWS to alternate buttons

Small

Decrement Size Increment

ENTER to Increment/Decrement, or toggle Size

Artisan Technology Group - Quality Instrumentation ... Guaranteed | (888) 88-SOURCE | www.artisantg.com

Use the arrow keys (← ,→) to move to the **Decrement** box. Press **Enter** several times and note the changes to KVP. Now move to the **Increment** box and press **Enter** several times noting KVP. The size of the change for each **Enter** can be changed by moving to the **Size** box and pressing **Enter**.

Two mechanisms are used for the changing the value depending upon the class of variables:

Multiplicative Changes

Decrement: Each time **Enter** is pressed, the value is multiplied by a factor depending upon the size selected.

Increment: Each time **Enter** is pressed, the value is multiplied by a factor depending upon the size selected.

Multiplicative changes are made to all parameters except OFFSET, ILMT.PLUS and ILMT.MINUS.

Additive Changes

Decrement: Each time **Enter** is pressed, the value is decreased by a value depending upon the parameter as given below:

Parameter	Small	Large	Comments
OFFSET	.001%	.1%	-159.5% min
ILMT.PLUS	1%	10%	0% min
ILMT.MINUS	1%	10%	0% min

Artisan Technology Group - Quality Instrumentation ... Guaranteed | (888) 88-SOURCE | www.artisantg.com

Increment

Each time Enter is pressed, the value is increased by a value depending upon the parameter as given below:

Parameter	Small	Large	Comments
OFFSET	.001%	.1%	159.495% max
ILMT.PLUS	1%	10%	100% max
ILMT.MINUS	1%	10%	100% max

Exiting the Decrement/ Increment Window

The up arrow key can be used to exit the Decrement/Increment window and return to the **Enter A Variable Name** line of the **Variables** window.

4.8 Help Menu

An on-line help screen can be accessed at any time within the DPM Dialogue program by either pressing the **F1** key or by accessing the main menu (**F10**) and moving the cursor to Help.

Help menu

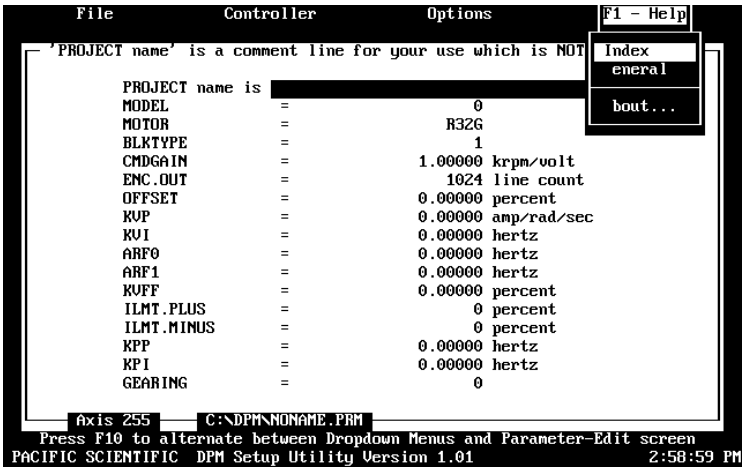

Artisan Technology Group - Quality Instrumentation ... Guaranteed | (888) 88-SOURCE | www.artisantg.com

4.8.1 Index of Commands

DPM Dialogue provides a list of parameters and commands within the help menu. The help screens for each command can be accessed via this list.

Index screen

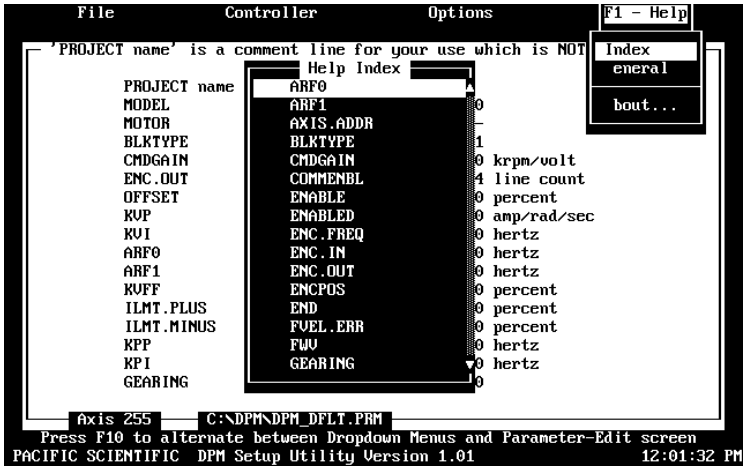

Procedure

To access the index list, perform the following:

1. Press the **F10** key to access the pull down menu.
2. Using the arrow keys (← ,→), move the cursor to highlight **Help**.
3. Using the arrow keys (↑ ,↓), move the cursor to highlight e **Index** and press **Enter**.
4. Using the arrow keys (↑ ,↓), select the command for which help is needed and press **Enter**.

The help screen for the selected command will be displayed. Press **Enter** to clear the help screen.

Artisan Technology Group - Quality Instrumentation ... Guaranteed | (888) 88-SOURCE | www.artisantg.com

4.8.2 General Help

The DPM Dialogue on-line help is sensitive to the particular area of the screen in which you are working. For example, if you are working in the Controller Set Up menu at the “Motor Part Number” prompt, pressing **F1** will produce the following help screen:

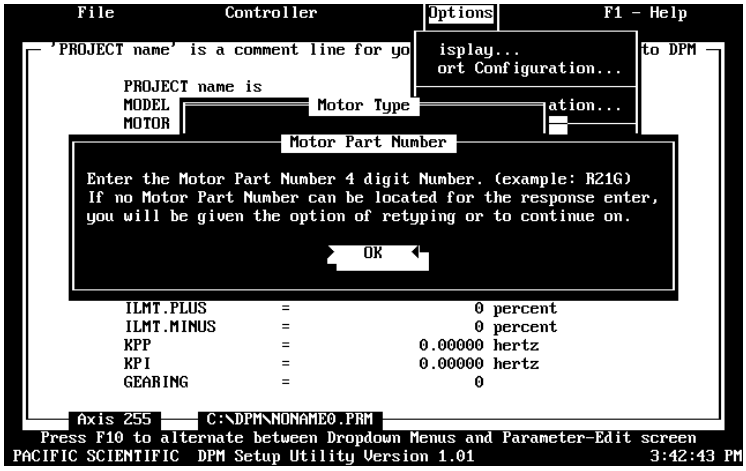

4.8.3 About ...

The “About...” option contains information pertaining to manufacturer, version number, etc.

About... screen

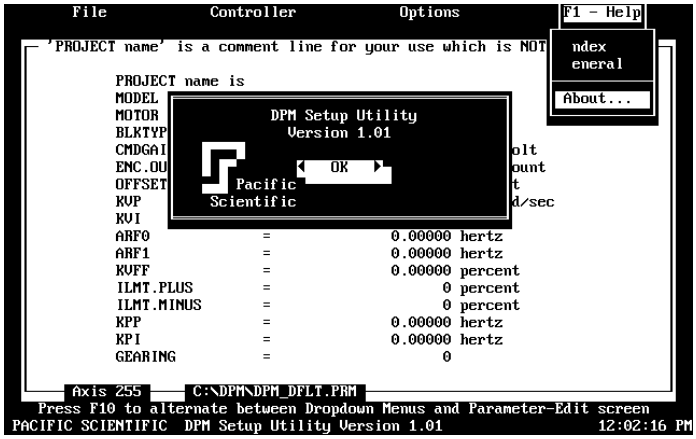

Artisan Technology Group - Quality Instrumentation ... Guaranteed | (888) 88-SOURCE | www.artisantg.com

5 Torque Control, Velocity Loop Control, Position Loop Control

Introduction

The default value for the parameter BLKTYPE is one. This configures the SC320/SC720 Servo Controller as a velocity loop. By changing BLKTYPE to zero, the DPM allows the controller to be configured as a torque controller. By changing BLKTYPE to two, the controller is configured as a position loop.

All three configurations are described in this chapter. The parameters affecting the operation of each configuration are listed and those which the user must typically set manually are highlighted. Also, constraints are given upon the order in which certain parameters must be set.

5.1 Changing Blocktype

BLKTYPE is <u>not</u> affected by any of the choices made when using **New Setup** or **Controller Set Up...**. BLKTYPE can be changed by editing the Parameter-Edit screen or by using the **Variables** utility. It is important that certain parameters are set appropriately when changing BLKTYPE. These parameters and configurations are described in detail in the following three sections.

Artisan Technology Group - Quality Instrumentation ... Guaranteed | (888) 88-SOURCE | www.artisantg.com

5.2 BLOCKTYPE = 0: Torque Control

Introduction

Setting BLKTYPE equal to zero eliminates tachometer feedback and configures the control structure for torque control as shown below:

Block diagram

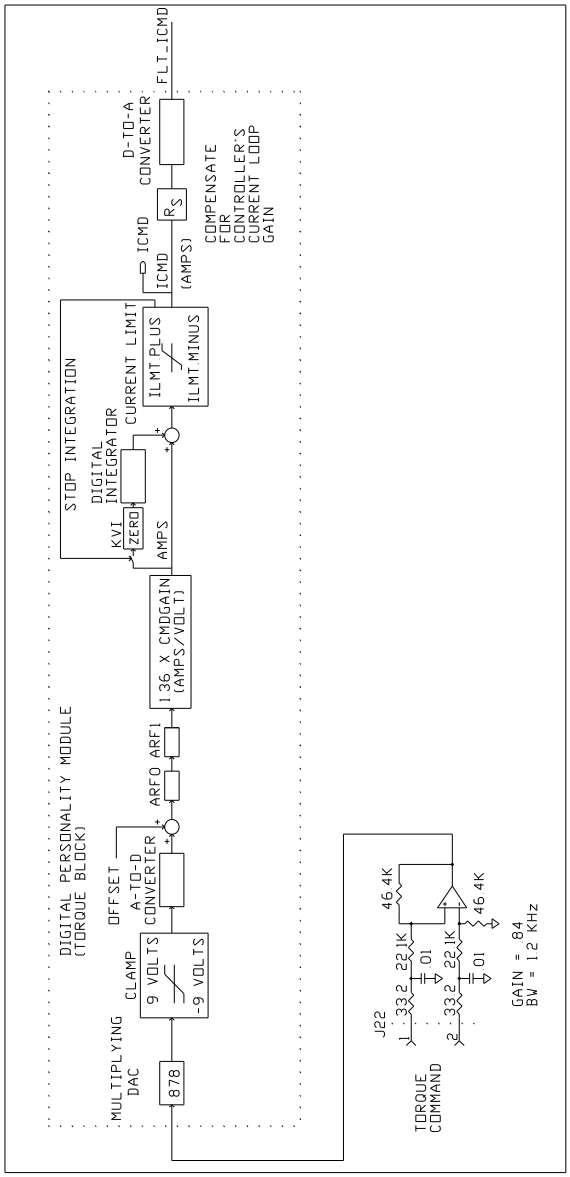

Artisan Technology Group - Quality Instrumentation ... Guaranteed | (888) 88-SOURCE | www.artisantg.com

Digital-to-Analog Converter

The analog command, J22-1 to J22-2, is buffered by a differential amplifier with a gain of .84 and bandwidth of 1.2 KHz outside the DPM. Within the DPM, the analog signal is further attenuated by a multiplying DAC[1] set for a gain of .878. This will avoid clamping of the analog circuitry in front of the A-to-D converter. The command is then converted to digital format by the D-to-A converter. All signals to the right of the D-to-A converter are in digital format until the D-to-A converter at the right of the diagram.

After the command is digitized, an offset is added. This allows compensation for offsets in the command source, the buffer amplifier, and the A-to-D converter. Scaling of the offset is in percent of 11.3 volts, the full scale input to the A-to-D converter.

The command is then passed through two digital low-pass filters, `ARF0` and `ARF1`. These are useful in dealing with mechanical resonance problems, particularly when the torque block is part of a velocity loop (see Chapter 7 for more details). Each filter is a single order low pass filter, having unity gain at DC, nearly unity gain for frequencies lower than the corner frequency, and gain dropping as f_c/f for frequencies (f) above the corner frequency (f_c). The corner frequency, in Hz, for the first filter equals the value of parameter `ARF0` while the corner frequency for the second filter equals the value of `ARF1`.

Command gain

A gain is then applied to the command to provide the specified command gain (amps /volts).[2] The output of this gain block is processed by the integrator normally associated with the velocity block.

1 Digital-to-Analog Converter. Used here to provide a controllable gain to the analog command signal.

2 This gain is an internal parameter set by the DPM's firmware to give the specified command gain. It is not affected by KVP. KVP has no effect in the torque block configuration.

Artisan Technology Group - Quality Instrumentation ... Guaranteed | (888) 88-SOURCE | www.artisantg.com

The value of parameter **KVI must be set to zero** to eliminate the effects of this integrator which are undesirable in torque-block applications. The output of this gain block represents the current command before any current clamping.

The current command is then compared with the current limits, set by parameters **ILMT.PLUS** and **ILMT.MINUS,** and clamped appropriately.

The resulting ICMD, in amps, is scaled by the block $\mathbf{R_s}$ to adjust for the scaling of the controller's current loop which depends upon model number. Nominal scaling for the current loops (motor amps per volt at the command input to the current loop) is shown below:

Scaling ICMD

Model	Current Loop Scaling (amps/volt)
SC322/SC722	1.75
SC323/SC723	3.50
SC724	7.00
SC725	14.00
SC726	28.00

The output of $\mathbf{R_s}$ is then converted to an analog voltage to generate FLT_ICMD (filtered current command), the output of the DPM. FLT_ICMD is processed identically by the rest of the controller as when an Analog Personality Module is used (See Controller Manual for more information). FLT_ICMD is generated using an 8-bit D-to-A converter with resolution enhancement. The 8 bit input to the D-to-A converter is updated at a 2.9 KHz rate such that the average value equals the 16 bit command computed within the microprocessor.

Artisan Technology Group - Quality Instrumentation ... Guaranteed | (888) 88-SOURCE | www.artisantg.com

Parameters

The following parameters control performance of the torque block (an asterisk indicates the parameter value which, typically, must be set by the user rather than depending upon **Controller Set Up** or **New Set Up**):

- `ARF0`
- `ARF1`
- `BLKTYPE`* must be set to 0.
- `CMDGAIN`* must be set to the required amps/volt. Normally, the system requirement will be in terms of torque lb-in/volt. Use the following formula to compute `CMDGAIN` in terms of the required torque per volt:

  $$\text{CMDGAIN (amps/volt)} = \frac{1.05 * \textit{Torque}\ (lb\text{–}in)/volt}{K_T}$$

  where K_T is the published torque constant of the Pacific Scientific brushless servo motor.
- `ILMT.MINUS`
- `ILMT.PLUS`
- `KVI`* **must be set to zero in torque block mode**
- `OFFSET`*use **Offset Adjust** utility after setting `BLKTYPE`

Order of parameters

The order indicated should be observed when setting the following parameters :

`BLKTYPE`

`CMDGAIN`

Note: *Run **Offset Adjust** utility after setting above parameters*

Artisan Technology Group - Quality Instrumentation ... Guaranteed | (888) 88-SOURCE | www.artisantg.com

5.3 BLOCKTYPE = 1: Velocity Control

Introduction

Setting BLKTYPE equal to one enables tachometer feedback and configures the control structure for velocity control as shown below:

Block diagram

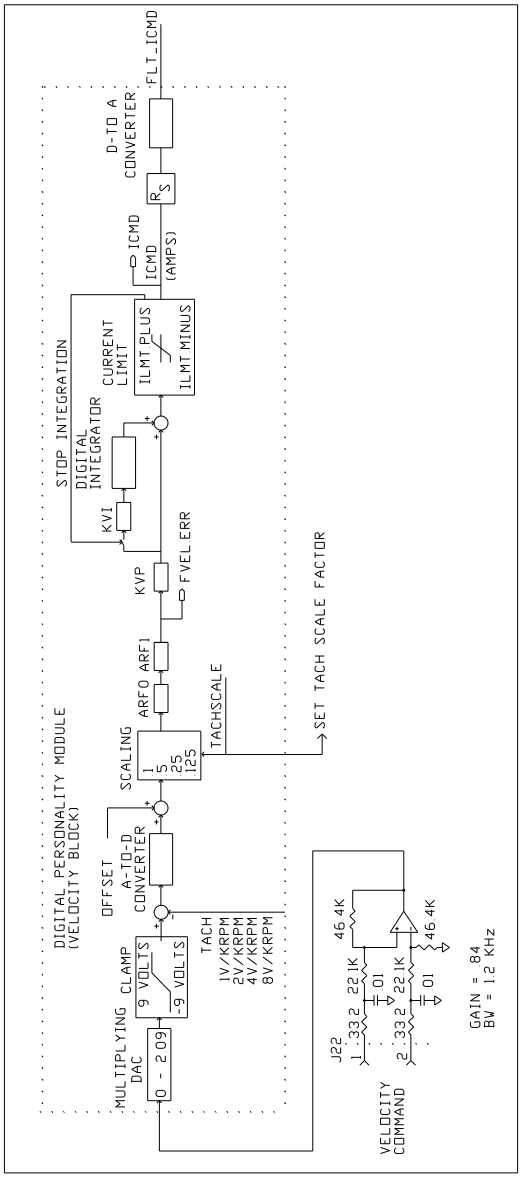

Artisan Technology Group - Quality Instrumentation ... Guaranteed | (888) 88-SOURCE | www.artisantg.com

DAC

The analog command, J22-1 to J22-2, is buffered by a differential amplifier with a gain of .84 and bandwidth of 1.2 KHz before the DPM. Within the DPM, the analog signal is scaled using a multiplying DAC[3]. The gain of the DAC stage is set by the microprocessor based upon the value of `TACHSCALE` (volts/krpm) and `CMDGAIN` (krpm/volt) using the following algorithm:

$$\text{DAC gain (volts/volt)} = \frac{CMDGAIN * TACHSCALE}{.84}$$

The gain of the multiplying DAC ranges between 0 and 2.09 with a resolution of 0.39% of full scale. The velocity error signal is formed by subtracting the analog tach signal from the DAC output as shown in the block diagram.

The error signal is digitized by the A-to-D converter. All signals to the right of the converter are digital until the D-to-A converter at the right of the diagram.

After the velocity error is digitized, an offset is added. This allows compensation of offsets in the command source, the buffer amplifier, and the A-to-D converter. Scaling of the offset is in percent of 11.3 volts, the full scale input to the A-to-D converter.

Anti-Resonant filters

The error is then scaled based on `TACHSCALE` so loop bandwidth is independent of tach scale factor and passed through two digital low-pass (anti-resonant) filters `ARF0` and `ARF1`. These are useful in dealing with mechanical resonance problems. Each filter has unity gain at DC, nearly unity gain for frequencies lower than the corner frequency, and gain dropping as approximately f_c/f for frequencies (f) above the corner frequency (f_c). The corner frequency, in Hz, for the first filter equals the value of parameter `ARF0` while the corner frequency for the second filter equals the value of `ARF1`.

3 Digital-to-Analog Converter. Used here to provide a controllable gain to the analog command signal.

Artisan Technology Group - Quality Instrumentation ... Guaranteed | (888) 88-SOURCE | www.artisantg.com

The output of the second filter is a variable, FVEL.ERR, which can be monitored using DPM Dialogue's **VARIABLE** utility.

Velocity loop compensation

The error signal is then processed by the velocity loop compensation. This compensation has two terms: the velocity loop proportional gain KVP, and the velocity loop integral gain KVI. The error signal is first multiplied by KVP which has units of amps/(radian/second). The output of the KVP block is processed by KVI and the digital integrator. The integrator's output is summed with the output of the KVP block as shown to form the current command before any current limiting. This compensation is referred to as "integral plus proportional". At low frequencies, the gain has the characteristics of an integrator (very high gain as the frequency approaches zero (DC) but dropping as 1/frequency as the frequency increases). Above a frequency, called the lag break frequency, the gain becomes constant approaching KVP. The compensation is implemented such that the lag break frequency (Hz) is equal to the value of parameter KVI. Chapter 7 has more details about setting the velocity loop compensation.

The current command is then compared with the current limits, set by parameters **ILMT.PLUS** and **ILMT.MINUS**, and clamped appropriately.

The resulting ICMD, in amps, is scaled by the block $\mathbf{R_s}$ to adjust for the scaling of the controller's current loop which depends upon model number. Nominal scaling for the current loops (motor amps per volt at the command input to the current loop) is shown below:

Scaling ICMD

Model	Current Loop Scaling (amps/volt)
SC322/SC722	1.75
SC323/SC723	3.50
SC724	7.00
SC725	14.00
SC726	28.00

Artisan Technology Group - Quality Instrumentation ... Guaranteed | (888) 88-SOURCE | www.artisantg.com

Digital-to-Analog Converter

Finally, the output of $\mathbf{R_s}$ is converted to an analog voltage to generate `FLT_ICMD` (filtered current command), the output of the DPM. `FLT_ICMD` is processed identically by the rest of the controller as when an Analog Personality Module is used (Refer to Controller Manual for more information). `FLT_ICMD` is generated using an 8-bit D-to-A converter with resolution enhancement. The 8 bit input to the D-to-A converter is updated at a 2.9 KHz rate such that the average value equals the 16 bit command computed within the microprocessor.

Range of Command Gain

The maximum achievable command gain can be found for each value of `TACHSCALE` by calculating the motor speed required to generate a tach voltage of .84 * 2.09 = 1.756 volts (maximum DAC output voltage for one volt command input). Results are summarized below:

TACHSCALE (volts/krpm)	**MAX CMDGAIN (krpm/volt)**
1	1.76
2	0.878
4	0.439
8	0.219

Parameters

The following parameters control performance of the velocity block (an asterisk indicates the parameter value which, typically, must be set by the user rather than depending upon **Controller Set Up** or **New Set Up**):

- `ARF0`
- `ARF1`
- `BLKTYPE` must be set to 1.
- `CMDGAIN`*
- `ILMT.MINUS`

Artisan Technology Group - Quality Instrumentation ... Guaranteed | (888) 88-SOURCE | www.artisantg.com

- ILMT.PLUS
- KVI
- KVP
- OFFSET* use **OFFSET Adjust** utility after setting BLKTYPE to 1.
- TACHSCALE

Order of parameters

The order indicated should be observed when setting the following parameters:

BLKTYPE

TACHSCALE

CMDGAIN

Note: *Run **OFFSET Adjust** utility after setting above parameters.*

5.4 BLOCKTYPE = 2: Position Control

Introduction

Setting BLKTYPE to 2 creates a position loop which compares the commanded position, generated from the encoder or step-and-direction input signals, to the measured position determined from the emulated encoder signals. The error between the commanded and measured position (following error) generates a velocity command signal to the velocity loop. Velocity feed-forward can be used to reduce following error.

Block diagram

The position loop, as well as the generation of commanded and measured position is illustrated in the block diagram on the following page:

Artisan Technology Group - Quality Instrumentation ... Guaranteed | (888) 88-SOURCE | www.artisantg.com

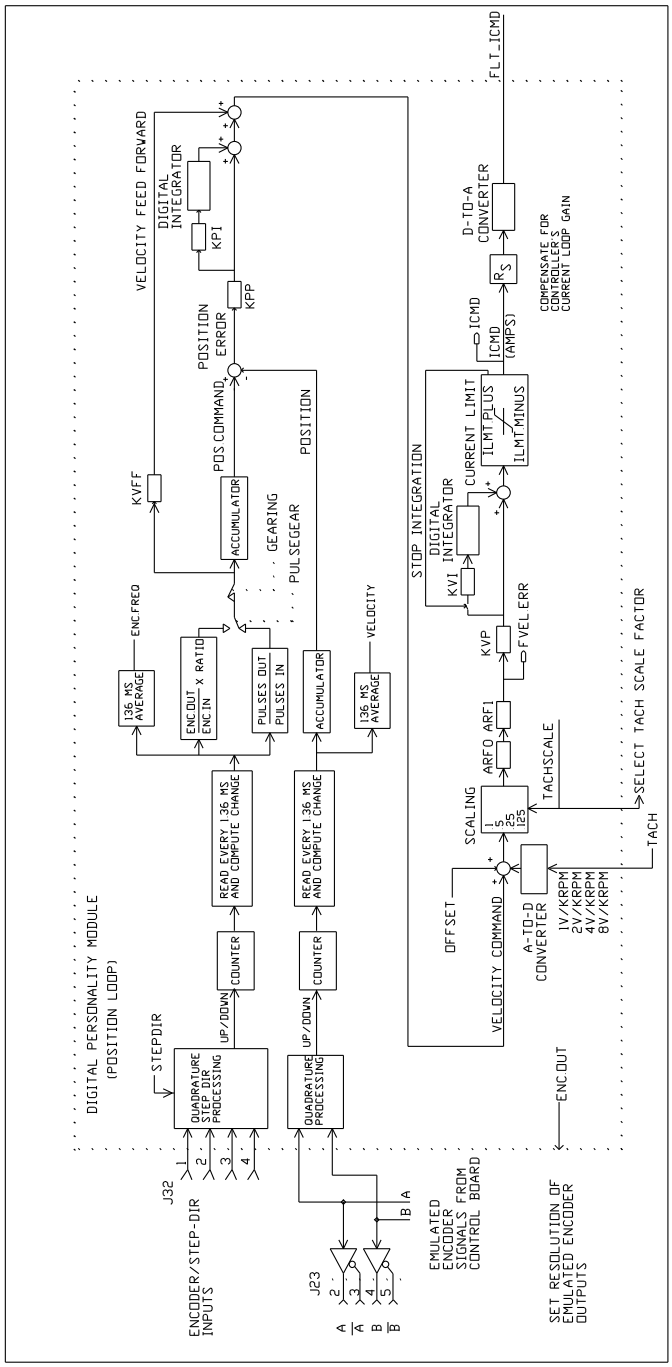

Artisan Technology Group - Quality Instrumentation ... Guaranteed | (888) 88-SOURCE | www.artisantg.com

Position command

The position command inputs on J32 are processed as quadrature encoder or step-and-direction signals depending upon the variable `STEPDIR`. The results of the processing are "Up/Down" signals to a counter. One count corresponds to one quadrature transition if encoder signals are used or one step if step-and-direction signals are used. The hardware counter is read every 1.36 milliseconds by the microprocessor and the change since the last reading computed. The change is a measure of encoder frequency (or step rate)[4]. This change is then multiplied by one of two scaling factors to form the desired change in motor angle (in units of emulated encoder quadrature counts) depending upon the variable `PULSEGEAR`:

- PULSEGEAR = 0

If `PULSEGEAR` = 0, the change in counts is multiplied by

$$\frac{ENC.OUT}{ENC.IN} \times RATIO$$

- PULSEGEAR = 1

If `PULSEGEAR` = 1, the change in counts is multiplied by:

$$\frac{PULSES.OUT}{PULSES.IN}$$

The results of this multiplication are accumulated (added) to form the position command.

The output of the multiplication described above (before accumulation) is the desired change in motor position over 1.36 milliseconds. This, with proper scaling, represents the desired motor speed. This signal can be used for velocity feed forward as described below.

4 The variable `ENC.FREQ` is generated by adding together one hundred successive samples to form the change in counts over 136 milliseconds and then dividing by time. This longer averaging time reduces the jitters in `ENC.FREQ`.

Artisan Technology Group - Quality Instrumentation ... Guaranteed | (888) 88-SOURCE | www.artisantg.com

Position feedback

The encoder emulation outputs of the SC320/SC720 are used in the DPM for position feedback (the signals are taken before the differential line drivers as shown in the diagram). These signals are processed similar to the command inputs described earlier. The difference between the commanded position and measured position is the position error.

Position loop compensation

The error signal is then processed by the position loop compensation. This compensation has two terms: the position loop proportional gain, KPP, and the position loop integral gain KPI. The error signal is first multiplied by KPP which has units of (radian / second) / radian[5]. The output of the KPP block is processed by KPI and the digital integrator. The integrator's output is summed with the output of the KPP block as shown to form the velocity command (in the absence of any velocity feedforward). This compensation is referred to as "integral plus proportional". At low frequencies, the gain has the characteristics of an integrator (very high gain as the frequency approaches zero (DC) but dropping as 1/frequency as the frequency increases). Above a frequency, called the lag break frequency, the gain becomes flat approaching KPP. The compensation is implemented such that the lag break frequency (Hz) is equal to the value of parameter KPI.

Velocity feed forward

The output of the position loop compensation is added to the velocity feed forward signal to form the velocity command. The velocity feedforward signal is generated by multiplying the command velocity, described above, by the feed forward gain KVFF. The units of KVFF are percent.

5 KPP is scaled such that the bandwidth of the position loop equals KPP in Hz.

Artisan Technology Group - Quality Instrumentation ... Guaranteed | (888) 88-SOURCE | www.artisantg.com

Velocity loop

For BLKTYPE = 2, the commanded velocity is in digital format. Therefore, the structure of the velocity loop is slightly different than in BLKTYPE = 1 where the commanded velocity is analog. The analog tach signal is converted to digital format by the A-to-D converter. The velocity error is now generated digitally by subtracting the converted tach signal from the command. Processing of the velocity error signal is identical to that for the velocity loop described in Section 5.3.

Parameters

The following parameters control performance of the position loop (an asterisk indicates the parameter value which, typically, must be set by the user rather than depending upon **Controller Set Up** or **New Set Up**):

- ARF0
- ARF1
- BLKTYPE* must be set to 2.
- ENC.OUT* Default is 1024 lines
- ILMT.MINUS
- ILMT.PLUS
- KPI
- KPP
- KVI
- KVP
- OFFSET* use **OFFSET Adjust** utility after setting BLKTYPE to 2.

Artisan Technology Group - Quality Instrumentation ... Guaranteed | (888) 88-SOURCE | www.artisantg.com

- PULSEGEAR*

  IF PULSEGEAR = 0
  ENC.IN*
  RATIO*

  IF PULSEGEAR = 1
  PULSES.IN*
  PULSES.OUT*

- STEPDIR*
- TACHSCALE

Order of parameters

The order indicated should be observed when setting the following parameters:

BLKTYPE

ENC.OUT

ENC.IN

RATIO

KVFF

KPP

Note: *Run **OFFSET Adjust** utility after setting above parameters.*

Artisan Technology Group - Quality Instrumentation ... Guaranteed | (888) 88-SOURCE | www.artisantg.com

6 Setting Parameters for Electronic Gearing

Introduction

This chapter provides procedures for setting the electronic gearing parameters depending upon the mode of operation used.

BLKTYPE must be set equal to 2 (position loop) for any of the electronic gearing modes. Review Section 5.4 for a description of all the parameters associated with position loop operation.

The hardware interface between the DPM and encoder/step-&-direction inputs is described in Chapter 3.

6.1 Slaving the SC320/SC720 to a Master Encoder

This section describes two configurations for electronically gearing to a master encoder[1]. Two methods are available for setting the gear ratio:

RATIO

If the ratio of slave motor revolutions to encoder revolutions can be represented as a floating point number then set the following parameters in the order shown:

- Set BLKTYPE to 2
- Set STEPDIR to 0
- Set PULSEGEAR to 0

1 Quadrature encoder signals are assumed. Step and direction format can be used with either value of PULSEGEAR by setting STEPDIR to one and treating each step as one quadrature encoder transition (this means that ENC.IN should be set to one quarter the number of steps per rev when using RATIO). The most common usage of step and direction inputs (from a stepper indexer) is covered in Section 6.2.

Artisan Technology Group - Quality Instrumentation ... Guaranteed | (888) 88-SOURCE | www.artisantg.com

- Set ENC.OUT to the line count required for the emulated encoder outputs (default is 1024).
- Set ENC.IN to the line count of the master (input) encoder (the number of quadrature transitions will be four times ENC.IN per revolution).
- Set RATIO to the desired ratio of motor revolution to master encoder revolutions.
- Set GEARING to 1.

PULSES.IN
PULSES.OUT

If the ratio of slave motor revolutions to encoder revolutions must equal the ratio of two integers which is not exactly equal to a floating point number (example 1 : 3), then set the following parameters in the order shown:

- Set BLKTYPE to 2
- Set STEPDIR to 0
- Set PULSEGEAR to 1
- Set ENC.OUT equal to the line count required for the emulated encoder outputs (default is 1024).
- Set PULSES.OUT as follows:

  PULSES.OUT = ENC.OUT * output-revs

  where output-revs is taken from the desired ratio of output-revs / input-revs. PULSES.OUT must be an integer.
- Set PULSES.IN as follows:

  PULSES.IN = input-encoder-line-count * input-revs

  where input-revs is taken from the desired ratio of output-revs / input-revs. PULSES.IN must be an integer.

  Example: If ENC.OUT = 1024, ENC.IN =1000 and the motor should make one revolution for every three encoder revolutions, set PULSES.OUT to 1024 * 1 = 1024 and PULSES.IN to 1000 * 3 = 3000.

Artisan Technology Group - Quality Instrumentation ... Guaranteed | (888) 88-SOURCE | www.artisantg.com

If either PULSES.IN or PULSES.OUT exceed their allowable limits (-32,768 to 32,767), divide both PULSES.IN and PULSES.OUT by any common factors until they are within limits.

- Set GEARING to 1.

6.2 Controlling the DPM with a Stepper Indexer

If a stepper indexer is used to control an SC320 or SC720, then set the following parameters in the order shown:

- Set BLKTYPE to 2
- Set STEPDIR to 1
- Set PULSEGEAR to 1
- Set ENC.OUT equal to the line count required for the emulated encoder outputs (default is 1024).

  Note: *The following three steps can be used to determine PULSES.IN and PULSES.OUT or the table at the end of this section can be used which covers many common step sizes.*

- Set PULSES.IN equal to the steps-per-rev setting of the indexer.
- Set PULSES.OUT equal to 4 * ENC.OUT.

  If either PULSES.IN or PULSES.OUT exceed their allowable limits (-32,768 to 32,767), divide both PULSES.IN and PULSES.OUT by any common factors until they are within limits.

- Set GEARING to 1

Artisan Technology Group - Quality Instrumentation ... Guaranteed | (888) 88-SOURCE | www.artisantg.com

Step Size

The following table provides settings for many common step sizes

Note: *The values for* `PULSES.IN` *and* `PULSES.OUT` *are reduced to their smallest values by dividing by common factors.*

Steps/rev	ENC.OUT	PULSES.IN	PULSES.OUT
200	500	1	10
200	512	25	256
200	1000	1	20
200	1024	25	512
400	500	1	5
400	512	25	128
400	1000	1	10
400	1024	25	256
1000	500	1	2
1000	512	125	256
1000	1000	1	4
1000	1024	125	512
5000	500	5	2
5000	512	625	256
5000	1000	5	4
5000	1024	625	512

Artisan Technology Group - Quality Instrumentation ... Guaranteed | (888) 88-SOURCE | www.artisantg.com

Steps/rev	ENC.OUT	PULSES.IN	PULSES.OUT
25000	500	25	2
25000	512	3125	256
25000	1000	25	4
25000	1024	3125	512

Artisan Technology Group - Quality Instrumentation ... Guaranteed | (888) 88-SOURCE | www.artisantg.com

7 Servo Loop Parameters

Introduction

This chapter describes setting parameters associated with the velocity and position loops. In many cases, satisfactory operation is achieved using the **New Set Up** or **Controller Set Up** utilities. However, in some cases the user must adjust control loop parameters due to large mismatches between motor and load inertia, mechanical resonance, backlash, etc. This chapter provides guidance for handling these situations.

Chapter 5 should be reviewed for a description of the control loop architecture.

7.1 Velocity Loop

The velocity loop bandwidth (defined below) is the key to system performance. Systems with fast settling time must have high velocity loop bandwidth. Conversely, if the velocity loop bandwidth is low, attempting to achieve fast settling time by increasing the position loop bandwidth, KPP, leads to overshoot and ringing.

Velocity Loop Bandwidth

The velocity loop bandwidth is given by the following equation:

$$\text{BW (Hz)} = \frac{0.159 * KVP * K_{TEFF}}{J_{TOT}}$$

where KVP is the velocity loop proportional gain in amps/(rad/sec), K_{TEFF} is the effective motor torque constant in lb-in/amp, and J_{TOT} is the total inertia (motor + resolver + load) in lb-in-sec^2. The effective motor torque constant is approximately 0.95 times the value K_T peak published in the PacSci catalog.

Note: *Bandwidth is defined here as the unity gain open-loop crossover frequency.*

Artisan Technology Group - Quality Instrumentation ... Guaranteed | (888) 88-SOURCE | www.artisantg.com

Default bandwidths

The **New Setup** and **Controller Setup** utilities set KVP to achieve the velocity loop bandwidths shown below.

Note: *The bandwidth depends upon the user's selection for desired system response:*

	Selected Response		
	Gentle	**Medium**	**Stiff**
Velocity Loop Bandwidth (Hz)	25	75	180*

*Velocity loop bandwidth for stiff response is reduced to 150 Hz for operation with 115 Vac.

Load inertia

From the formula for bandwidth, it is seen that bandwidth changes inversely with total inertia. If the load inertia is ten times the motor plus resolver inertia, the bandwidths will be one eleventh the values shown unless the load inertia is accounted for by increasing KVP. **The most common servo setup problem is adding large load inertia without a corresponding increase in KVP.**

The value of KVP to achieve a desired bandwidth can easily be calculated as follows:

$$\text{KVP} = \frac{6.28 * Bandwidth\ (Hz) * J_{TOT}}{K_{TEFF}}$$

Artisan Technology Group - Quality Instrumentation ... Guaranteed | (888) 88-SOURCE | www.artisantg.com

For example, to achieve 75 Hz bandwidth with an R32G motor having 0.01 lb-in-sec^2 load inertia:

JTOT[1] = 0.00055 + 0.01 = 0.01055 lb-in-sec^2

KTEFF[2] = 0.95 * 4.4 = 4.18 lb-in/amp

$$KVP = \frac{6.28 * 75 * 0.01055}{4.18} = 1.19$$

Alternatively, DPM Dialogue can be used to make the calculation. Select the **Manual** option when using the **New Setup** or **Controller Setup** utilities and enter the load inertia where indicated in the **Controller Setup** window. DPM Dialogue will calculate the appropriate value for KVP to achieve 25, 75 or 180 Hz bandwidth depending upon the choice made for system response.

There is no specific answer to the general question "What should the bandwidth be?". In general, the higher the velocity loop bandwidth, the faster the settling time will be and the better the rejection of torque disturbances (increased stiffness). Typically, velocity loop bandwidths range from 30 to 100 Hz.

1 Motor plus resolver inertia (0.00055 lb-in-sec2) for the R32G motor can be found in the catalog or DPM Dialogue's motor data screen.

2 KTEFF can be found by multiplying the catalog value for K_T peak (4.4 lb-in/amp) by 0.95 as shown in the example, or by using the Back EMF Constant, K_e (52.0 Volts/kRPM) shown on DPM Dialogue's motor data screen in the following formula: KTEFF = 0.080 * K_e (volts/krpm)

Artisan Technology Group - Quality Instrumentation ... Guaranteed | (888) 88-SOURCE | www.artisantg.com

Problems with high inertia

It would seem from the above that setting KVP is simply a matter of increasing its value to compensate for load inertia. Unfortunately, the following problems often interfere, particularly when the load inertia is large compared with the motor's inertia:

1. Mechanical resonance between motor and load causes high frequency oscillation.
2. Backlash between motor and load effectively unload the motor over a small angle. Within this angle, the increased bandwidth can result in oscillations.
3. Ripple in the velocity feedback signal can result in large motor ripple current if KVP is large.

Resonance

Mechanical resonance is caused by springiness between motor inertia and load inertia. This may result from belts, flexible couplings, or the torsional stiffness of shafts. **In general the stiffer the couplings, the higher the resonance frequency and the easier it is to achieve good performance**.

If the velocity loop breaks into an oscillation at a frequency well above the calculated velocity loop bandwidth, a resonance problem may well exist. A second symptom is that the frequency of oscillation is relatively constant with small changes to ARF0 and ARF1.

Artisan Technology Group - Quality Instrumentation ... Guaranteed | (888) 88-SOURCE | www.artisantg.com

ARF0 & ARF1

Two digital anti-resonant filters, ARF0 and ARF1 are included in the velocity loop. Their purpose is to lower the gain at the resonant frequency so that oscillations can't occur. Default values, also a function of the selected system response, are shown below:

	Gentle	**Medium**	**Stiff**
ARF0(Hz)	100	150	1500
ARF1(HZ)	200	750	$12x10^6$

If the velocity loop bandwidth cannot be raised to an acceptable value without encountering a resonant oscillation, the following procedure is recommended:

1. Set both ARF0 and ARF1 to 400 Hz.
2. Increase KVP slowly until oscillation at the resonant frequency just begins. Then reduce KVP slightly until the oscillation just stops. Compute the velocity loop bandwidth using the formula given at the beginning of this section. If the velocity loop bandwidth is less than .25 times the value of ARF0 and ARF1, then proceed to step 3. Otherwise, go to step 4.
3. Decrease both ARF0 and ARF1 by 20% and go back to step 2.
4. The velocity loop bandwidth should now be approximately one quarter the value of ARF0 and ARF1. For margin, reduce KVP, ARF0, and ARF1 by 20%

Backlash

Some backlash may be unavoidable, especially when gear reduction is used. If backlash is present, the inertia match must be good (load inertia should be roughly equal to motor inertia) for good servo performance. Gearing reduces the inertia reflected to the motor by the square of the gear reduction from motor to load. Therefore, select a gear ratio to give the required match.

Artisan Technology Group - Quality Instrumentation ... Guaranteed | (888) 88-SOURCE | www.artisantg.com

Current ripple

The velocity feedback signal in standard SC320/SC720 controllers operating with the standard 15 arcmin resolver can have up to 5% p-p ripple. The resulting motor current ripple can be calculated using the following formula:

Motor ripple current (amps p-p) =
$5.2 * 10^{-3} *$ KVP * Motor Speed (rpm)

There is cause for concern when this number exceeds 10% of the controllers current rating. The motor current should be monitored using the test connector (J24-4) to insure ripple current is not excessive.

Velocity feedback ripple, and hence motor current ripple, can be reduced by using the 4 arcmin controller option and by specifying a ± 4 arcmin resolver.

KVI

The parameter `KVI` sets the so called "lag-break" frequency of the velocity loop. `KVI` is equal to the frequency in Hz where the velocity loop compensation transitions from integral characteristics to proportional characteristics. Controller rejection of torque disturbances increases as `KVI` increases. Default values for `KVI` are shown below (`KVI` is set to 1/15 times the unloaded velocity loop bandwidth):

	Gentle	**Medium**	**Stiff**
KVI (Velocity Loop Lag-Break Frequ.(Hz))	1.7	5.0	12.0*

*`KVI` for stiff response is reduced to 10 for operation with 115 Vac

Artisan Technology Group - Quality Instrumentation ... Guaranteed | (888) 88-SOURCE | www.artisantg.com

If the controller is to be used within a position loop (either with BLKTYPE = 2 or when using an external position controller and BLKTYPE = 1), KVI should be equal to or less than 0.1 times the velocity loop bandwidth. If no position loop is used, KVI can be set to 0.25 times the velocity loop bandwidth (or higher if some ringing can be tolerated). In general, the response to a velocity step command (or truncated ramp) will have overshoot for non-zero values of KVI.

7.2 Position Loop

When BLKTYPE is set equal to 2, a position loop is configured outside the velocity loop describe in the previous section. The velocity loop must be set up and evaluated in terms of bandwidth before attempting to setup the position loop.

KPP

The position loop proportional gain, KPP, determines the settling time of the position loop. KPP is the bandwidth of the position loop in Hz assuming an ideal velocity loop. Default values for KPP are shown below:

	Gentle	**Medium**	**Stiff**
KPP (Position Loop Bandwidth (Hz))	5	15	50

In general, settling time will be faster the higher the value of KPP. However, trying to set KPP to a high value with inadequate velocity loop bandwidth results in overshoot and ringing. A good trade off is to set KPP to 0.2 times the velocity loop bandwidth. Slightly higher values can be used if overshoot can be tolerated.

Artisan Technology Group - Quality Instrumentation ... Guaranteed | (888) 88-SOURCE | www.artisantg.com

KVFF

KVFF is the velocity feed forward gain. In the absence of velocity feed forward (KVFF = 0), the commanded velocity is proportional to the position (following) error. This means that the actual position will lag the commanded position by a value proportional to speed. The error will be smaller for larger values of KPP.

The following table illustrates the following error magnitude:

Speed (rpm)	KPP (Hz)	Following error (revolutions)
1000	10	0.27
2000	10	0.53
5000	10	1.33
1000	20	0.13
2000	20	0.27
5000	20	0.66

Note: *The following error can easily exceed one complete motor revolution. In many electronic gearing application, such following errors are not acceptable (real gears don't have following errors!). Also, stepper systems don't have such errors.*

Feedforward takes advantage of the fact that the DPM's microprocessor knows the frequency of the encoder or step inputs and hence knows how fast the motor should be going at a given instant. All or part of this velocity can be added to the velocity command to reduce following error. If KVFF is set to 100 (%), then the steady state following error should reduce to zero.

Artisan Technology Group - Quality Instrumentation ... Guaranteed | (888) 88-SOURCE | www.artisantg.com

Velocity scale factor accuracy

Because the velocity feedback is an analog signal with ± 2.5% scale factor accuracy, the feed forward gain will not be precisely the value set. The gain can easily be calibrated by applying encoder or step pulses of a known rate to the DPM. `KPP` and `KPI` should be set to zero and `KVFF` adjusted until the motor velocity, as indicated by reading `VELOCITY` using DPM Dialogue, equals the speed implied by the input and the gear ratio.

Note: *This calibration should be done after using the Adjust Offset utility to zero the velocity loop offset.*

Overshoot

Setting `KVFF` equal to 100% can result in position overshoot. Somewhat lower values (70% -80%) may be required if this is a problem. However, setting `KVFF` less than 100 will leave some following error when running at speed.

KPI

The position loop allows the option of integral gain although the default, `KPI` = 0, eliminates the integral term. `KPI` is the frequency in Hz where the position loop compensation transitions from integral to proportional gain characteristics. Setting `KPI` to a non-zero value eliminates steady state following error. The time for the error to decay decreases as `KPI` is increased. However, non-zero `KPI` will usually introduce overshoot and, possibly, ringing. It is recommended that feedforward be used to eliminate following error and `KPI` be left at zero.

Artisan Technology Group - Quality Instrumentation ... Guaranteed | (888) 88-SOURCE | www.artisantg.com

8 Parameter, Variable and Command Reference

In this chapter

This chapter includes a quick reference guide to all DPM parameters, variables, and commands as well as detailed descriptions of each. The quick reference includes the page number of the detailed description.

8.1 Quick Reference

This section contains a summary list of DPM parameters and commands. The list defines the type of entry, default value, and page number in Section 8.2 where a detailed description can be found. ”NV” in the type field indicates the parameter is stored in non-volatile memory.

Note: *A default ”value” of setup indicates that the value assigned by DPM Dialogue is a result of the controller set-up function.*

Name	Type	Default Value	Page #
ARF0	NV parameter (float)	set up	8-5
ARF1	NV parameter (float)	set up	8-6
AXIS.ADDR	NV parameter (integer)	255	8-7
BLKTYPE	NV parameter (integer)	1	8-8
CMDGAIN	NV parameter (float)	set up	8-9
COMMENBL	parameter (integer)	1	8-10
ENABLE	parameter (integer)	1	8-11
ENABLED	variable (integer R/O)		8-12
ENCPOS	variable (integer R/O)		8-13
ENC.FREQ	variable (float R/O)		8-14

Artisan Technology Group - Quality Instrumentation ... Guaranteed | (888) 88-SOURCE | www.artisantg.com

Name	Type	Default Value	Page #
ENC.IN	NV parameter (integer)	1024	8-15
ENC.OUT	NV parameter (integer)	1024	8-16
FVEL.ERR	variable (float R/O)		8-17
FWV	parameter (integer R/O)		8-18
GEARING	NV parameter (integer)	0	8-19
ICMD	variable (float R/O)		8-21
ILMT.MINUS	NV parameter (integer)	set up	8-22
ILMT.PLUS	NV parameter (integer)	set up	8-23
IPEAK	variable (float R/O)		8-24
ITF0	NV parameter (float)	set up	8-25
IT.THRESH	NV parameter (float)	set up	8-26
KIP	NV parameter (integer)	set up	8-27
KPI	NV parameter (float)	0	8-28
KPP	NV parameter (float)	set up	8-29
KVFF	NV parameter (float)	set up	8-30
KVI	NV parameter (float)	set up	8-31
KVP	NV parameter (float)	set up	8-32
MODEL	NV parameter (integer R/O)	set up	8-33
MOTOR	NV parameter (integer R/O)	set up	8-34
NVLOAD	command		8-35
NVSAVE	command		8-36
OFFSET	NV parameter (float)		8-37
POLECOUNT	NV parameter (integer)	set up	8-38

Artisan Technology Group - Quality Instrumentation ... Guaranteed | (888) 88-SOURCE | www.artisantg.com

Name	Type	Default Value	Page #
POSITION	variable (integer R/O)		8-39
POS.CMDSET	variable (integer)		8-40
POS.COMMAND	variable (integer R/O)		8-42
PULSEGEAR	NV parameter (integer)	0	8-43
PULSES.IN	NV parameter (integer)	1	8-44
PULSES.OUT	NV parameter (integer)	1	8-45
RATIO	NV parameter (float)	1.00	8-46
STEPDIR	NV parameter (integer)	0	8-48
TACHSCALE	NV parameter (integer)	set up	8-49
VELOCITY	variable (float R/O)		8-50

Artisan Technology Group - Quality Instrumentation ... Guaranteed | (888) 88-SOURCE | www.artisantg.com

8.2 Programming Instructions

Introduction

This section is an alphabetical reference to DPM instructions.

- commands
- parameters
- variables

The name and type of each instruction is listed at the top of the page. The instruction is then described based on the following categories:

Purpose

Units

Range or Value

Default

Related Parameters/Commands

Guidelines

Note: *"NV" indicates the parameter is stored in non-volatile memory.*

Artisan Technology Group - Quality Instrumentation ... Guaranteed | (888) 88-SOURCE | www.artisantg.com

ARF0

NV parameter

(float)

Purpose

ARF0 is the stage 0 anti-resonant single order low pass filter corner frequency.

Units

ARF0 is the corner frequency in Hz

Range

.01 to 10,000,000

Default

Note: *The default value of this parameter is set during the configuration set up in DPM Dialogue.*

Related parameters

ARF1 — stage 1 anti-resonant filter break frequency.

KIP — sets the current loop gain compensation control.

KPI — sets the integral gain of the position loop

KVP — sets the proportional gain of the velocity loop.

KVI — sets the integral gain of the velocity loop.

KPP — sets the proportional gain of the position loop.

KVFF — sets the amount of velocity feed forward signal applied to the velocity loop.

Guidelines

ARF0 is the corner frequency in Hz of one of two single order low pass anti-resonant filters. The purpose of the anti-resonant filters is to attenuate the velocity loop gain at the mechanical resonant frequency. See Chapter 7 for more information.

Artisan Technology Group - Quality Instrumentation ... Guaranteed | (888) 88-SOURCE | www.artisantg.com

ARF1

NV parameter

(float)

Purpose

`ARF1` is the stage 1 anti-resonant single order low pass filter corner frequency.

Units

`ARF1` is the corner frequency in Hz

Range

.01 to 10,000,000

Default

Note: *The default value of this parameter is set during the configuration set up in DPM Dialogue.*

Related parameters

`ARF0` — stage 0 anti-resonant filter break frequency.

`KIP` — sets the current loop gain compensation control.

`KPI` — sets the integral gain of the position loop

`KVP` — sets the proportional gain of the velocity loop.

`KVI` — sets the integral gain of the velocity loop.

`KPP`— sets the proportional gain of the position loop.

`KVFF` — sets the amount of velocity feedforward signal applied to the velocity loop.

Guidelines

`ARF1` is the corner frequency in Hz of one of two single order low pass anti-resonant filters. The purpose of the anti-resonant filters is to attenuate the velocity loop gain at the mechanical resonant frequency. See Chapter 7 for more information.

Artisan Technology Group - Quality Instrumentation ... Guaranteed | (888) 88-SOURCE | www.artisantg.com

AXIS.ADDR

NV parameter

(integer)

Purpose

`AXIS.ADDR` indicates the RS-485 or Multidrop address. `AXIS.ADDR` must be set using the serial port prior to use in the multi-axis RS-485 configuration.

Units None

Range 1 to 255

Default 255

Guidelines

This variable must be set initially using the serial port and DPM set to address of 255. Once `AXIS.ADDR` is set to a new value, DPM Dialogue's axis selection function must be used to select the new address for communication to continue. After this, either the RS-232 or the RS-485 port can be used. See Section 3.1 for more information.

IMPORTANT NOTE

The value for `AXIS.ADDR` must be saved in non-volatile memory using NVSAVE if a new address is to be effective after power cycling.

Artisan Technology Group - Quality Instrumentation ... Guaranteed | (888) 88-SOURCE | www.artisantg.com

BLKTYPE

NV parameter

(integer)

Purpose

`BLKTYPE` specifies configuration as a position, velocity, or torque block.

Units

None

Default

1 (Analog Velocity Block)

Related parameters

`CMDGAIN` — controls the scale factor of the analog input signal.

`GEARING` — enables/disables electronic gearing when `BLKTYPE` = 2.

Guidelines

`BLKTYPE` allows the SC320/SC720 to be operated as a torque controller, an analog velocity controller (default), or a position controller (electronic gearing, step and direction):

BLKTYPE	Servo Configuration
BLKTYPE = 0	Torque block - analog command
BLKTYPE = 1	Velocity block - analog command (default)
BLKTYPE = 2	Position loop

For block diagrams of the controller configurations, refer to Chapter 5. This also describes alternative `BLKTYPE` settings.

When used in any of the analog modes, the analog control is the differential voltage applied to the Analog In (+) and Analog In (-) inputs (J22-1 and J22-2 respectively).

Artisan Technology Group - Quality Instrumentation ... Guaranteed | (888) 88-SOURCE | www.artisantg.com

CMDGAIN

NV parameter

(float)

Purpose `CMDGAIN` controls the scale factor of the analog input signal.

Units Amps/Volt (BLKTYPE = 0)

KRPM/Volt (BLKTYPE = 1)

Range 0 to 1.75/TACHSCALE (BLKTYPE = 0)

0 to 4.3 x IPEAK (BLKTYPE = 1)

Default **Note:** *The default value of this parameter is set during the configuration set up in DPM Dialogue.*

Related parameters `BLKTYPE` — specifies configuration as a position, velocity or torque block.

Guidelines `CMDGAIN` is a floating point variable that sets the command gain of the analog input (voltage from J22-1 to J22-2) for `BLKTYPE` equal to:

- 0 (Analog torque block)
- 1 (Analog velocity block)

IMPORTANT NOTE

When `BLKTYPE` = 1, the tach scale factor (`TACHSCALE`) should be set before `CMDGAIN`. If `TACHSCALE` is changed after `CMDGAIN`, the gain in KRPM/Volt will change and the value of `CMDGAIN` in the DPM will no longer equal the value previously set.

Artisan Technology Group - Quality Instrumentation ... Guaranteed | (888) 88-SOURCE | www.artisantg.com

COMMENBL

parameter

(integer)

Purpose `COMMENBL` allows/disallows normal commutation which is useful in checking resolver alignment.

Units None

Value 1 — enables commutation

0 — disables commutation. Forces 110 Hall State.

Default 1

Guidelines Resolver alignment can be checked by setting `COMMENBL` to 0 and commanding positive current into the motor.

Note: *The motor must be unloaded during this operation.*

Be careful that the current is less than the continuous current rating of the motor and controller. The motor should settle to a position where Hall signal 3 (J24 -3) is at a transition point, being high clockwise (looking at motor shaft) and low counterclockwise of this position. If this is not the case, check the motor and resolver cabling and the resolver alignment.

IMPORTANT NOTE

`COMMENBL` must always be 1 for normal operation. Leaving `COMMENBL` set to 0 can overheat and possibly damage the motor.

Artisan Technology Group - Quality Instrumentation ... Guaranteed | (888) 88-SOURCE | www.artisantg.com

ENABLE

parameter

(integer)

Purpose	ENABLE clamps the current command to zero when ENABLE = 0.
Units	None
Value	0 to clamp the current command to zero 1 to enable the current command
Default	1

Related parameters	ENABLED — displays whether controller is enabled (1) or disabled (0).

Guidelines

To enable, that is, allow power to flow to the motor, verify that the following conditions are all true:

1. Drive is not faulted. (Status display 0 or 8)
2. Enable/input (J22-4) connected to I/O Rtn.
3. ENABLE variable set to 1.

Artisan Technology Group - Quality Instrumentation ... Guaranteed | (888) 88-SOURCE | www.artisantg.com

ENABLED

variable

(integer)

(read only)

Purpose ENABLED indicates whether the controller is enabled.

Units None

Value 0 = controller disabled

1 = controller enabled

Related parameters ENABLE — variable to enable drive in program.

Guidelines To enable, that is, allow power to flow to the motor, verify that the following conditions are all true:

1. Drive is not faulted.
2. Enable input (J22-4) connected to I/O Rtn.
3. ENABLE is set to 1.

Artisan Technology Group - Quality Instrumentation ... Guaranteed | (888) 88-SOURCE | www.artisantg.com

ENCPOS

variable

(integer)

(read only)

Purpose

`ENCPOS` (Encoder Position) indicates the position of the external encoder or the accumulation of step inputs if step and direction input format is used. For example, with a 1024 line encoder, each increment of `ENCPOS` is equal to 1/4096 of a revolution of the encoder shaft.

Units

Quadrature encoder counts (`STEPDIR` = 0)

Steps (`STEPDIR` = 1)

Value

x = - 2,147,483,648 to +2,147,483,647 encoder quadrature counts or steps

---

Related parameters

`ENC.FREQ` — displays encoder frequency.

`STEPDIR` — specifies whether quadrature encoder or step and direction format is used.

Guidelines

Maximum input frequency to each encoder input is 750 KHz (3,000,000 quadrature counts/sec). Maximum step frequency is 750,000 steps/second.

Artisan Technology Group - Quality Instrumentation ... Guaranteed | (888) 88-SOURCE | www.artisantg.com

ENC.FREQ

variable

(float)

(read only)

Purpose

`ENC.FREQ` (Encoder Frequency) is the frequency in quadrature pulses per second of the external encoder (or steps per second if step and direction format is used) input averaged over a 136 msec interval for filtering.

Units

Quadrature encoder counts per second (`STEPDIR` = 0)

Steps per second (`STEPDIR` = 1)

Range

-3,000,000 to +3,000,000

Calculation

ENC.FREQ = Encoder Speed (RPM) x Encoder Line Count/15

Related parameters

`STEPDIR` — determines whether quadrature encoder or step and direction input format are used.

Guidelines

The value returned is a floating point variable.

Artisan Technology Group - Quality Instrumentation ... Guaranteed | (888) 88-SOURCE | www.artisantg.com

ENC.IN

NV parameter

(integer)

Purpose

ENC.IN specifies the line count of the encoder being used or one-fourth the steps/rev if step and direction input format is used for electronic gearing.

Units

Encoder line count (STEPDIR = 0)

Steps per rev/4 (STEPDIR = 1)

Range

x = 1 to 65535

Default

x = 1024

Related parameters

BLKTYPE — must be 2 (position loop) for electronic gearing.

ENC.OUT — sets the line count of the emulated encoder output.

GEARING — turns electronic gearing On or Off.

PULSEGEAR — determines whether gear ratio is determined by ENC.IN, ENC.OUT and RATIO (PULSEGEAR = 0) or by PULSES.IN and PULSES.OUT (PULSEGEAR = 1)

RATIO — the ratio of motor shaft movement to encoder shaft movement when PULSEGEAR = 0.

STEPDIR — specifies whether quadrature encoder or step and direction input format is used.

Guidelines

Note: *ENC.IN and ENC.OUT must be specified before RATIO when PULSEGEAR = 0.*

ENC.IN does not affect operation when PULSEGEAR = 1.

ENC.IN does not affect ENC.FREQ.

Artisan Technology Group - Quality Instrumentation ... Guaranteed | (888) 88-SOURCE | www.artisantg.com

ENC.OUT

NV parameter

(integer)

Purpose ENC.OUT selects the resolution of the emulated encoder output port.

Units Emulated encoder line count

Range Standard (72xA/32xA) = 500, 512, 1000, 1024

Extended Resolution (72xB/32xB) = 2048, 4096

Note: *2048 and 4096 are available only with extended resolution option. If ENC.OUT is set to 2048 or 4096 on standard unit, actual output line count will be 512 or 1024 respectively.*

Note: *On extended resolution units, encoder outputs **are not** available if TACHSCALE is set to 1 or 2.*

Default 1024

Related parameters BLKTYPE — must be 2 (position loop) for electronic gearing.

ENC.IN — defines the line count of the input encoder or the steps per rev if step and direction. input format is used.

GEARING — turns electronic gearing On or Off.

PULSEGEAR — determines whether gear ratio is determined by ENC.IN, ENC.OUT and RATIO (PULSEGEAR = 0) or by PULSES.IN and PULSES.OUT (PULSEGEAR = 1)

RATIO — the ratio of motor shaft movement to encoder shaft movement when PULSEGEAR = 0.

Guidelines ENC.IN and ENC.OUT must be set before RATIO when PULSEGEAR = 0.

Artisan Technology Group - Quality Instrumentation ... Guaranteed | (888) 88-SOURCE | www.artisantg.com

FVEL.ERR

variable

(float)

(read only)

Purpose

`FVEL.ERR` indicates the velocity servo error signal (`FVEL.ERR` = commanded velocity - measured velocity) in RPM, after it has been processed by the anti-resonant filter section.

Units

RPM

Range

-9514 to +9514

Related parameters

`ARF0, ARF1` — indicates anti-resonant filter corner frequencies.

`VELOCITY` — indicates the motor velocity.

Artisan Technology Group - Quality Instrumentation ... Guaranteed | (888) 88-SOURCE | www.artisantg.com

FWV

parameter

(integer)

(read only)

Purpose FWV indicates the DPM firmware version number.

Units None

Artisan Technology Group - Quality Instrumentation ... Guaranteed | (888) 88-SOURCE | www.artisantg.com

GEARING

NV parameter

(integer)

Purpose

GEARING turns electronic gearing on or off and sets allowed direction of motion. Electronic gearing slaves the motion of the controller's motor to a master encoder signal or allows position control using step and direction inputs.

Units

None

Value

Value of GEARING	Description
0	Off, no gearing
1	Permits bi-directional motion slaved to the master's encoder input signal
2	Permits only clockwise controller response to follow the master's encoder input signal
3	Permits only counterclockwise controller response to follow the master's encoder input signal

Default

0

Related parameters

BLKTYPE — must be 2 (position loop) for electronic gearing.

ENC.IN — specifies the line count of the master encoder or steps per rev being used.

ENC.OUT — specifies resolution of emulated encoder signals which are used for position feedback when GEARING = 1.

RATIO — the electronic gearing ratio of encoder shaft movement to motor shaft movement using encoder line count when PULSEGEAR = 0.

Artisan Technology Group - Quality Instrumentation ... Guaranteed | (888) 88-SOURCE | www.artisantg.com

ENCPOS — displays the encoder position.

PULSEGEAR — determines whether gear ratio is determined by ENC.IN and RATIO (PULSEGEAR = 0) or by PULSES.IN and PULSES.OUT (PULSEGEAR = 1)

PULSES.IN — specifies the input pulse ratio (used to select exact gearing ratio) when PULSEGEAR = 1.

PULSES.OUT — specifies the output pulse ratio (used to select exact gearing ratio) when PULSEGEAR = 1.

Guidelines

Follow these guidelines to use the GEARING variable:

- Connect encoder or step and direction signals to the DPM (J32). Specify the correct encoder line count or the steps per rev/4 for ENC.IN if using RATIO (PULSEGEAR = 0)
- Specify the following parameters in the order given before setting GEARING equal to 1,2, or 3:

  BLKTYPE

  STEPDIR

  PULSEGEAR

  ENC.OUT

  ENC.IN (If using PULSEGEAR = 0)

  RATIO (If using PULSEGEAR = 0)

  PULSES.IN (If using PULSEGEAR = 1)

  PULSES.OUT (If using PULSEGEAR = 1)

Note: *The gear ratio can be changed using the serial link after GEARING is set to 1, 2, or 3.*

If unidirectional gearing is set (GEARING = 2 or 3), gearing motion in the allowed direction occurs only when the master encoder returns to the point where it originally reversed direction.

See Chapter 6 for more information about electronic gearing.

Artisan Technology Group - Quality Instrumentation ... Guaranteed | (888) 88-SOURCE | www.artisantg.com

ICMD

variable

(float)

(read only)

Purpose `ICMD` indicates the commanded motor torque current in amperes.

Units Amperes

Range 0 to IPEAK x ILMT.PLUS/100 or

0 to IPEAK x ILMT.MINUS/100

Related parameters `ILMT.MINUS` — sets the maximum allowable current in the counter-clockwise direction as a percentage of the controller's peak rating.

`ILMT.PLUS` — sets the maximum allowable current in the clockwise direction as a percentage of the controller's peak rating.

Artisan Technology Group - Quality Instrumentation ... Guaranteed | (888) 88-SOURCE | www.artisantg.com

ILMT.MINUS

NV parameter

(integer)

Purpose

`ILMT.MINUS` (Counter-Clockwise Current Limit) sets the maximum allowable current in the counter-clockwise direction. This is a percentage of the controller's peak current rating (I_{peak}).

Units Percentage of peak current rating of controller

Range 0 to 100 percent

Default 100

Related parameters `ILMT.PLUS` — sets the maximum allowable current in the clockwise direction.

Guidelines Only integer values may be entered (i.e. no fractional numbers).

Artisan Technology Group - Quality Instrumentation ... Guaranteed | (888) 88-SOURCE | www.artisantg.com

ILMT.PLUS

NV parameter

(integer)

Purpose

`ILMT.PLUS` sets the maximum allowable current in the clockwise direction as a percentage of the controller's peak current rating (I_{peak}).

Units

Percentage of peak current rating of controller

Range

0 to 100 percent

Default

100

Related parameters

`ILMT.MINUS` — sets the maximum allowable current in the counter-clockwise direction.

Guidelines

Only integer values may be entered (i.e. no fractional numbers).

Artisan Technology Group - Quality Instrumentation ... Guaranteed | (888) 88-SOURCE | www.artisantg.com

IPEAK

variable

(float)

(read only)

Purpose

`IPEAK` contains the peak current rating of the controller in amperes.

I_{peak} is the drive's peak current rating:

Model	Peak Current Rating
SC322, SC722	7.5
SC323, SC723	15
SC724	30
SC725	60
SC726	120

Units

Amperes

Related parameters

`MODEL` — indicates the SC720 servocontroller model number and determines the value of `IPEAK`.

Artisan Technology Group - Quality Instrumentation ... Guaranteed | (888) 88-SOURCE | www.artisantg.com

ITF0

NV parameter

(float)

Purpose

`ITF0` specifies the corner frequency of the low pass filter implementing the IT controller thermal protection circuit.

Units Hertz

Range .02 to 468

Default **Note:** *The default value of this parameter is set during the configuration set up in DPM Dialogue.*

Related parameters

`IT.THRESH` —designates the threshold (trip level) at which the IT thermal protection circuit triggers an IT fault.

Guidelines

`ITF0`, in conjunction with `IT.THRESH`, specifies the thermal protection circuit for the servocontroller. `ITF0` represents the corner frequency of a low pass filter which processes the absolute value of the measured motor current. The filter's output is compared to `IT.THRESH` and if ever greater than `IT.THRESH`, an IT fault (status display of 4) is generated. Increasing ITF0 will add protection to the controller by permitting faster response to over-current conditions.

Note: *The minimum frequency for `ITF0` (slowest response) is limited to protect the servocontroller's power electronics.*

Artisan Technology Group - Quality Instrumentation ... Guaranteed | (888) 88-SOURCE | www.artisantg.com

IT.THRESH

NV parameter

(float)

Purpose

`IT.THRESH` designates the threshold (trip level) at which the IT thermal protection circuit triggers an overcurrent fault.

Units

Percentage of the controller's peak current capability.

Range

Controller	Percentage
323, 723, 726	0 to 60
725	0 to 66
322, 722, 724	0 to 75

Default

Note: *The default value of this parameter is set during the configuration set up in DPM Dialogue.*

Related parameters

`ITF0` — specifies the corner frequency of a low pass filter, applied to the absolute value of the measured motor current, used for the controller's I*T protection.

`IPEAK` — denotes the peak current level for a servo controller.

Guidelines

`IT.THRESH`, in conjunction with the peak current for a servocontroller (`IPEAK`) specifies the level of filtered motor current which activates an IT fault. This threshold specifies the maximum continuous (steady-state) motor current permitted. This parameter can be reduced in order to set a lower threshold of motor over-current protection.

Note: *The maximum value for `IT.THRESH` is limited to protect the servocontroller power electronics.*

Artisan Technology Group - Quality Instrumentation ... Guaranteed | (888) 88-SOURCE | www.artisantg.com

KIP

parameter

integer

Purpose `KIP` sets the proportional gain of the current loop.

Units Volts/amp

Range 375/IPEAK to 77,321/IPEAK

Default **Note:** *The default value of this parameter is set during the configuration set up in DPM Dialogue.*

Related parameters

`MODEL` — indicates the SC720 servocontroller model number.

`MOTOR` — specifies motor being used.

Guidelines `KIP` is set by DPM dialogue as long as the motor being used is in DPM Dialogue's catalog. If you are using a motor not included in the catalog, use the following formulas to calculate `KIP`:

AC input = 230 VAC: KIP = 12.6 * $L_{l\text{-}l}$ (mh)

AC input = 115 VAC: KIP = 15.1 * $L_{l\text{-}l}$ (mh)

where $L_{l\text{-}l}$ (mh) is the motor's line-to-line inductance in milihenries

WARNING

`KIP` is set by New Setup or Controller Setup based upon motor parameters and should not normally be changed by user.

Artisan Technology Group - Quality Instrumentation ... Guaranteed | (888) 88-SOURCE | www.artisantg.com

KPI

NV parameter

(float)

Purpose

KPI sets the integral gain of the position loop.

Units

Hertz

Range

0 to 58.5

Default

0

Related parameters

ARF0 — Stage 0 anti-resonant single order low pass filter corner frequency

ARF1 — Stage 1 anti-resonant single order low pass filter corner frequency

KPP — Position loop proportional gain

KVP — sets the proportional gain of the velocity loop.

KVI — sets the integral gain of the velocity loop.

KVFF — sets the amount of velocity feed forward signal applied to the velocity loop.

Guidelines

KPI is the position loop integral gain. It can be used to reduce steady-state following error to zero. However, setting KPI to a non-zero value often results in overshoot and, possibly, ringing. See Chapter 7 for more information.

Artisan Technology Group - Quality Instrumentation ... Guaranteed | (888) 88-SOURCE | www.artisantg.com

KPP

NV parameter

(float)

Purpose KPP sets the proportional gain of the position loop.

Units Hertz

Range 0 to 117+ (ENC.OUT = 500 or 1000)

0 to 120+ (ENC.OUT = 512 or 1024, 2048, 4096)

Default **Note:** *The default value of this parameter is set during the configuration set up in DPM Dialogue.*

Related parameters ARF0 — stage 0 anti-resonant single order low pass filter corner frequency.

ARF1 — stage 1 anti-resonant single order low pass filter break frequency.

KPI — sets the integral gain of the position loop.

KVP — sets the proportional gain of the velocity loop.

KVI — sets the integral gain of the velocity loop.

KVFF — sets the amount of velocity feed forward signal applied to the velocity loop.

Guidelines KPP is the position loop's proportional gain. It has units of Hz and is defined by the following relationship:

KPP(Hz) = [Commanded velocity (rad/sec) / Position Error (rad)] / (2 * pi)

See Chapter 7 for more information.

Artisan Technology Group - Quality Instrumentation ... Guaranteed | (888) 88-SOURCE | www.artisantg.com

KVFF

NV parameter

(float)

Purpose KVFF sets the proportion of velocity feed forward signal added to the velocity command from differentiated position command.

Units Percentage

Range 0 to 823

Default **Note:** *A default value of 0 is assigned during the configuration set up in DPM Dialogue.*

Related parameters

ARF0 — stage 0 anti-resonant single order low pass filter corner frequency.

ARF1 — stage 1 anti-resonant single order low pass filter corner frequency.

KPI — sets the integral gain of the position loop.

KVI — sets the integral gain of the velocity loop.

KVP — sets the proportional gain of the velocity loop.

KPP — sets the proportional gain of the position loop.

Guidelines With no velocity feed forward (KVFF = 0), the commanded velocity results entirely from position error for position loops. Velocity feed forward adds a term to the commanded velocity equal to the **expected** velocity times (KVFF/100). Increasing KVFF reduces following error and gives faster response time but, if too large, can produce overshoot. Typically, KVFF should not be set larger than 80 for good dynamics and acceptable overshoot, but should be set to 100 for minimum following error which may be necessary in electronic gearing applications.

See Chapter 7 for more information.

Artisan Technology Group - Quality Instrumentation ... Guaranteed | (888) 88-SOURCE | www.artisantg.com

KVI

NV parameter

(float)

Purpose KVI sets the integral gain of the velocity loop.

Units Hertz

Range 0 to 234

Default **Note:** *The default value of this parameter is set during the configuration set up in DPM Dialogue.*

Related parameters

ARF0 — stage 0 anti-resonant single order low pass filter corner frequency.

ARF1 — stage 1 anti-resonant single order low pass filter corner frequency.

KPI — sets the integral gain of the position loop.

KVP — sets the proportional gain of the velocity loop.

KPP — sets the proportional gain of the position loop.

KVFF — sets the amount of velocity feed forward signal applied to the velocity loop.

Guidelines KVI is the velocity loop's integral gain. It has units of Hz and defines the frequency where the velocity loop compensation transitions from integral characteristics (gain decreasing inversely with frequency) to proportional characteristics (constant gain). This should typically be less than 10% of the velocity loop's bandwidth (unity-gain crossover)

See Chapter 7 for more information.

Artisan Technology Group - Quality Instrumentation ... Guaranteed | (888) 88-SOURCE | www.artisantg.com

KVP

NV parameter

(float)

Purpose

KVP sets the proportional gain of the velocity loop.

Units Amps/(rad/sec)

Range 0 to IPEAK * 7.3

Default **Note:** *The default value of this parameter is set during the configuration set up in DPM Dialogue.*

Related parameters

ARF0 — stage 0 anti-resonant filter break frequency.

ARF1 — stage 1 anti-resonant filter break frequency.

KVI — sets the integral gain of the velocity loop.

KPI — sets the integral gain of the position loop.

KPP — sets the proportional gain of the position loop.

KVFF — sets the amount of velocity feed forward signal applied to the velocity loop.

Guidelines

KVP is the velocity loop's proportional gain. It has units of Amps/(rad/sec) and is defined by the following relationship:

KVP (amps / (rad / sec)) = Commanded motor current (amps) / Velocity error (rad / sec)

KVP must be adjusted for total load inertia and motor torque constant as described in Chapter 7.

Artisan Technology Group - Quality Instrumentation ... Guaranteed | (888) 88-SOURCE | www.artisantg.com

MODEL

NV parameter

(integer)

(read only)

Purpose `MODEL` indicates the servocontroller model number (power level).

Units None

Values 720 (Unconfigured), 722, 723, 724, 725, 726

322, 323

Guidelines This is a read only parameter that can only be set by DPM Dialogue's Controller Setup or New Setup Utilities.

Artisan Technology Group - Quality Instrumentation ... Guaranteed | (888) 88-SOURCE | www.artisantg.com

MOTOR

NV parameter

(integer)

(read only)

Purpose `MOTOR` indicates the first 4 characters of the motor part number.

Units None

Guidelines This is a read only parameter that can only be set by DPM Dialogue's Controller Setup or New Setup Utilities.

Artisan Technology Group - Quality Instrumentation ... Guaranteed | (888) 88-SOURCE | www.artisantg.com

NVLOAD
command

Purpose

NVLOAD loads working memory (RAM) from non-volatile memory (NVRAM)

Related commands

NVSAVE — saves contents of RAM (working memory) to non-volatile memory.

Guidelines

Use NVLOAD when you desire to update all parameters listed below from non-volatile memory. This might be useful if you have changed one or more parameters using the serial link and now wish to restore the original values (assuming the NVSAVE command was not issued after changing parameters).

The following parameters are stored in non-volatile memory:

ARF0	GEARING	KPP	POLECOUNT
ARF1	ILMT.MINUS	KVFF	PULSEGEAR
AXIS.ADDR	ILMT.PLUS	KVI	PULSES.IN
BLKTYPE	ITF0	KVP	PULSES.OUT
CMDGAIN	IT.THRESH	MODEL	RATIO
ENC.IN	KIP	MOTOR	STEPDIR
ENC.OUT	KPI	OFFSET	TACHSCALE

Artisan Technology Group - Quality Instrumentation ... Guaranteed | (888) 88-SOURCE | www.artisantg.com

NVSAVE
command

Purpose

NVSAVE stores parameter from RAM (working memory) to non-volatile memory.

Related commands

NVLOAD — loads RAM (working storage) from non-volatile memory.

Guidelines

Use NVSAVE when you wish to save all parameters listed below in non-volatile memory. The DPM will then utilize these values even after the power cycles.

The NVRAM utilized is rated to allow 100,000 write cycles. This is far greater than should ever be needed. However, repeated use of NVSAVE from a host computer should be avoided.

The following parameters are stored in non-volatile memory:

ARF0	GEARING	KPP	POLECOUNT
ARF1	ILMT.MINUS	KVFF	PULSEGEAR
AXIS.ADDR	ILMT.PLUS	KVI	PULSES.IN
BLKTYPE	ITF0	KVP	PULSES.OUT
CMDGAIN	IT.THRESH	MODEL	RATIO
ENC.IN	KIP	MOTOR	STEPDIR
ENC.OUT	KPI	OFFSET	TACHSCALE

Artisan Technology Group - Quality Instrumentation ... Guaranteed | (888) 88-SOURCE | www.artisantg.com

OFFSET

NV parameter

(float)

Purpose OFFSET corrects for offset in the response to the command input.

Units Percentage

Range -100 to +100. Corresponds to -11.3 volts to +11.3 volts at the input to the A-to-D converter.

Default 0

Guidelines DPM Dialogue's Offset adjust feature can be used to automatically adjust OFFSET. This should be done after setting BLKTYPE.

Artisan Technology Group - Quality Instrumentation ... Guaranteed | (888) 88-SOURCE | www.artisantg.com

POLECOUNT

NV parameter

(integer)

Purpose `POLECOUNT` matches the controller for the appropriate motor pole count.

Units Motor poles

Range 4 and 8

Default **Note:** *The default value of this parameter is set during the configuration set up in DPM Dialogue based upon the motor selected.*

Guidelines `POLECOUNT` defines the number of motor poles. Allowable values are 4 and 8.

IMPORTANT NOTE

A value is assigned to `POLECOUNT` by the controller Set Up feature. This value is appropriate for the selected motor.

Artisan Technology Group - Quality Instrumentation ... Guaranteed | (888) 88-SOURCE | www.artisantg.com

POSITION

variable

(integer)

(read only)

Purpose `POSITION` (Actual Position) indicates the actual motor position.

Units Quadrature counts of the emulated encoder outputs

Range `POSITION` = -2,147,483,648 to 2,147,483,647 quadrature counts

Related parameters `ENC.OUT` — sets the line count of emulated encoder outputs.

Guidelines The change in `POSITION` per motor revolutions is 4 x `ENC.OUT` .

Artisan Technology Group - Quality Instrumentation ... Guaranteed | (888) 88-SOURCE | www.artisantg.com

POS.CMDSET

variable

(integer)

Purpose

`POS.CMDSET` (read-write commanded position) can be used to change the commanded position and therefore allows position control over the serial link.

Units

Quadrature counts of the emulated encoder outputs.

Range

-2,147,483,648 to 2,147,483,647

Related parameters

`ENC.OUT` — sets the line count of emulated encoder variables outputs

`POSITION` — actual motor position

`POS.COMMAND` — allows reading but not changing the commanded position.

Artisan Technology Group - Quality Instrumentation ... Guaranteed | (888) 88-SOURCE | www.artisantg.com

Guidelines

`POS.CMDSET` can be used to change the commanded position, `POS.COMMAND`, and therefore allows position control using the serial link.

WARNING

Caution should be used when changing `POS.CMDSET`. The new value becomes the input to the position loop (no profiling). Therefore, large changes in `POS.COMMAND` (or `POS.CMDSET`) will result in violent motion and, very likely, large overshoot.

If `POS.COMMAND` is to be used for position control, a sequence of closely spaced position commands should be issued over time, representing a motion profile which is achievable with the controller, motor, and load.

Artisan Technology Group - Quality Instrumentation ... Guaranteed | (888) 88-SOURCE | www.artisantg.com

POS.COMMAND

variable

(integer)

(read only)

Purpose

`POS.COMMAND` (commanded position) indicates the position being commanded.

Units

Quadrature counts of the emulated encoder input (or steps if `STEP.DIR` = 1).

Range

-2,147,483,648 to 2,147,483,647

Related Parameters

`ENC.OUT` — sets the line count of emulated encoder variables

`POSITION` — actual motor position

`POS.CMDSET` — allows changing `POS.COMMAND` over the serial link.

Guidelines

`POS.COMMAND` can be used to determine the position being commanded. It is a read only variable so that it cannot be used to change the commanded position. `POS.CMDSET` allows `POS.COMMAND` to be changed using the serial link.

Artisan Technology Group - Quality Instrumentation ... Guaranteed | (888) 88-SOURCE | www.artisantg.com

PULSEGEAR

NV parameter

(integer)

Purpose

PULSEGEAR defines whether RATIO or PULSES.IN and PULSES.OUT determine the gear ratio.

Units None

Range 0 or 1

Default 0

Related parameters

BLKTYPE — must be 2 (position loop) for electronic gearing.

ENC.IN — specifies the line count of the master encoder input. (Only significant for PULSEGEAR = 0)

ENC.OUT — sets the line count of the emulated encoder output.

GEARING — turns electronic gearing On or Off.

PULSES.IN — specifies the input pulse ratio (used to select exact gearing ratio) when PULSEGEAR = 1.

PULSES.OUT — specifies the output pulse ratio (used to select exact gearing ratio) when PULSEGEAR = 1.

RATIO — the electronic gearing ratio of encoder shaft movement to motor shaft movement when PULSEGEAR = 0.

STEPDIR — specifies whether quadrature encoder or step and direction format is used.

Guidelines

Use PULSEGEAR = 1 when a ratio equal to the exact ratio of two integers (such as 1:3) is required.

See Chapter 6 for more information.

Artisan Technology Group - Quality Instrumentation ... Guaranteed | (888) 88-SOURCE | www.artisantg.com

PULSES.IN

NV parameter

(integer)

Purpose

PULSES.IN specifies the number of input encoder counts used for selecting an exact gear ratio.

Units Input encoder quadrature counts

Range x = -32,768 to +32,767 (except 0)

Default x = 1

Related parameters

BLKTYPE — must be 2 (position loop) for electronic gearing.

ENC.OUT — sets the line count of the emulated encoder output.

GEARING — turns electronic gearing On or Off.

PULSES.OUT — selects resultant emulated encoder quadrature counts.

PULSEGEAR — determines whether the gear ratio is determined by RATIO (PULSEGEAR = 0) or by PULSES.IN and PULSES.OUT (PULSEGEAR = 1)

STEPDIR — specifies whether quadrature encoder or step and direction format is used.

Guidelines

PULSES.IN and PULSES.OUT have no effect if PULSEGEAR = 0.

Artisan Technology Group - Quality Instrumentation ... Guaranteed | (888) 88-SOURCE | www.artisantg.com

PULSES.OUT

NV parameter

(integer)

Purpose

PULSES.OUT specifies the number of resolver counts the motor will move for a specified number of encoder counts (PULSES.IN).

Units Emulated encoder quadrature counts

Range x = -32,768 to +32,767

Default x = 1

Related parameters

BLKTYPE — must be 2 (position loop) for electronic gearing.

ENC.OUT — sets the line count of the emulated encoder output.

GEARING — turns electronic gearing On or Off.

PULSEGEAR — determines whether the gear ratio is determined by RATIO (PULSEGEAR = 0) or by PULSES.IN and PULSES.OUT (PULSEGEAR = 1)

PULSES.IN — specifies the number of encoder input quadrature counts that PULSES.OUT is referenced to.

STEPDIR — specifies whether quadrature encoder or step and direction format is used.

Guidelines

PULSES.IN and PULSES.OUT have no effect if PULSEGEAR = 0.

Artisan Technology Group - Quality Instrumentation ... Guaranteed | (888) 88-SOURCE | www.artisantg.com

RATIO

NV parameter

(float)

Purpose

`RATIO` sets the electronic gearing ratio (Rev/Rev) between the encoder shaft and the motor shaft.

Units output revs/input revs

Range x = -2,000 to +2,000

Resolution RATIO x 2^{-15}

Default x = 1.00

Related parameters

`BLKTYPE` — must be 2 (position loop) for electronic gearing.

`GEARING` — turns electronic gearing On or Off.

`ENC.IN` — sets the line count of the master encoder.

`ENC.OUT` — sets the line count of the emulated encoder output.

`PULSEGEAR` — determines whether the gear ratio is determined by `RATIO` (`PULSEGEAR` = 0) or by `PULSES.IN` and `PULSES.OUT` (`PULSEGEAR` = 1).

`STEPDIR` — specifies whether quadrature encoder or step and direction format is used.

Artisan Technology Group - Quality Instrumentation ... Guaranteed | (888) 88-SOURCE | www.artisantg.com

Guidelines

ENC.IN must be set to the line count of the input encoder before setting RATIO.

ENC.IN must be non-zero to set RATIO.

A negative value for RATIO causes motion opposite to the encoder shaft.

The gearing ratio can be specified by either PULSES.IN and PULSES.OUT, or by RATIO as determined by PULSEGEAR.

RATIO has no effect if PULSEGEAR = 1.

Artisan Technology Group - Quality Instrumentation ... Guaranteed | (888) 88-SOURCE | www.artisantg.com

STEPDIR

NV parameter

(integer)

Purpose

STEPDIR specifies either quadrature encoder signals or step and direction input signals.

Units

None

Range

Value of STEPDIR	Description
0	selects quadrature encoder pulses
1	selects step and direction input signals

Default

0

Related parameters

BLKTYPE — must be 2 (position loop) for electronic gearing.

GEARING — turns gearing functionality on or off.

ENC.IN — specifies encoder line count (STEPDIR = 0) or one quarter times the steps per rev (STEPDIR = 1).

ENC.OUT — sets the line count of the emulated encoder output.

PULSES.IN — determines the gear ratio if PULSEGEAR = 1.

PULSES.OUT — determines the gear ratio if PULSEGEAR = 1.

PULSEGEAR — determines whether the gear ratio is determined by RATIO (PULSEGEAR = 0) or by PULSES.IN and PULSES.OUT (PULSEGEAR = 1)

RATIO — the electronic gearing ratio of encoder shaft movement to motor shaft movement if PULSEGEAR = 1.

Artisan Technology Group - Quality Instrumentation ... Guaranteed | (888) 88-SOURCE | www.artisantg.com

TACHSCALE

NV parameter

(integer)

Purpose TACHSCALE sets the tachometer scale factor to 1, 2, 4, or 8 volts/KRPM.

Units volts/KRPM

Range 1, 2, 4, or 8

Default **Note:** *The default value of this parameter is set by DPM Dialogue to give the largest scale factor allowing operation to motor's base speed.*

Related parameters CMDGAIN — controls the scale factor of the analog input signal.

Guidelines In velocity block mode (BLKTYPE = 1), TACHSCALE must be set before setting CMDGAIN or the actual command scale factor will differ from CMDGAIN and the value of CMDGAIN in the DPM will differ from the value set.

Artisan Technology Group - Quality Instrumentation ... Guaranteed | (888) 88-SOURCE | www.artisantg.com

VELOCITY

variable

(float)

(read only)

Purpose `VELOCITY` indicates the actual speed at which the motor shaft is rotating averaged over a 136 msec interval. This is a read only variable.

Units RPM

Range -2.37×10^{-11}/ENC.OUT to $+2.37 \times 10^{11}$/ENC.OUT

Artisan Technology Group - Quality Instrumentation ... Guaranteed | (888) 88-SOURCE | www.artisantg.com

Appendix A Specifications

Analog Command

Range	+\- 12.5 Volts
Linearity	.25%
Offset	Adjustable to zero
Offset Drift	50 uV/^{o}C
Input Impedance	100 Kohms
A-to-D Monotonicity	Fully monotonic
A-to-D Resolution	16 bits
A-to-D Noise	2^{-14} (Fullscale) RMS

Control Loop Sampling Periods

Sampling Period of Digital Velocity Loop	340 microseconds
Sampling Period of Digital Position Loop	1.36 miliseconds

Artisan Technology Group - Quality Instrumentation ... Guaranteed | (888) 88-SOURCE | www.artisantg.com

Encoder/Step & Direction Input Timing Requirements

Max Encoder Input Frequency	750 KHz
Max Step Input Frequency	400 KHz (50% duty cycle)
Min Step Pulse Width	1.25 microseconds with Positive pulses (opto baseline OFF and pulsed ON) 1.0 microseconds with Negative pulses (opto baseline ON and pulsed OFF)
Direction Setup time	380 nanoseconds
Direction Hold time	380 nanoseconds

Serial interface

Type	RS-232/RS-485/422 (address selectable)
Baud rate	9600
Parity	none
Data word	10 bit (8 data, 1 start / 1 stop)

Artisan Technology Group - Quality Instrumentation ... Guaranteed | (888) 88-SOURCE | www.artisantg.com

Appendix B System Status Display

Introduction

The system status codes are displayed on the seven-segment display on the front panel. Refer to the following table for the meaning of these codes.

Note: *See the controller manual (SC320 or SC720) for more information.*

Display	System Status
0	Not enabled, not faulted.
1	Resolver conversion overspeed.
2	Motor overtemperature
3	Controller overtemperature
4	IT fault or no personality module.
4 with flashing green LED on DPM	DPM unconfigured. Run Set Up Utility.
5	Line neutral fault.
6	Control power fault.
7	Bus overvoltage or overcurrent.
8	No faults.

Artisan Technology Group - Quality Instrumentation ... Guaranteed | (888) 88-SOURCE | www.artisantg.com

Index

A

About... 4-37
Additive Changes 4-34
Address selection 3-3
Analog velocity controller 2-6
Anti-Resonant filters 5-7
Applying AC Power 2-5
ARF0 7-5, 8-5
ARF1 2-7, 7-5, 8-6
Automatic set up 2-6, 4-11, 4-20
Axis Selection 3-2, 4-9
AXIS.ADDR 8-7

B

Backlash 7-5
BLKTYPE 8-8

C

Changing Blocktype 5-1
Changing Parameters 4-31, 4-33
Clear Status 2-6
CMDGAIN 8-9
COM port 4-9
Command connections 2-1
Command gain 5-3
  range 5-9
COMMENBL 8-10
Communications Set Up 4-8
  introduction 4-8
  procedure 4-9
  port configuration 4-9
Configuring Controller 2-6
Configuring System 2-5
Connection digram, 2-2
Controller Menu 4-27
  changing parameters 4-31
  downloading 4-27
  introduction 4-27
  procedure 4-27
  uploading 4-28
  saving to RAM 4-30
Controller Set Up 2-6, 4-10
  automatic 4-11
  manual 4-11
  procedure 4-10
Controlling the DPM 6-3
Converter installation 3-5
Create Parameter File 4-19
Current Ripple 7-6

D

DAC 5-7
Default bandwidths 7-2
Default values
  Parameters 4-15, 4-23
Definition 1-1
Differential TTL Line Driver 3-8

Artisan Technology Group - Quality Instrumentation ... Guaranteed | (888) 88-SOURCE | www.artisantg.com

Digital-to Analog Converter 5-3, 5-9
Display Set Up 4-8
procedure 4-8
screen 4-8
DOS Shell 4-26
Downloading to Controller 2-9, 4-27

E

Editing Parameters 2-8
Electronic gearing 6-1
ENABLE 8-11
ENABLED 8-12
Enabling Controller 2-6
ENC.FREQ 8-14
ENC.IN 8-15
ENC.OUT 8-16
Encoder
Inputs 3-12
Phasing 3-12
Step & Direction Port 3-6
ENCPOS 8-13
ESC key 2-4
Exiting DPM Dialogue 2-10,4 -26

F

F10 key 2-4
Fault codes B-1
Features 1-1
File Menu 4-18
create new file 4-19
exit 4-26
introduction 4-18
open file 4-24
procedure 4-18
save as 4-25
save file 4-25
screen 4-18
shell to DOS 4-26
Find AXIS.ADDR 4-10
Following Error 7-8
Function Table 4-4
FVEL.ERR 8-17
FWV 8-18

G

GEARING 8-19
General Help 4-37
Getting Help 2-5, 2-7, 2-8, 4-33

H

Help Menu 4-35
About... 4-37
General 4-37
Index of commands 4-36
Screen 4-35
Host PC Requirements 4-1

I

I/O values 3-2, 3-7
ICMD 5-4, 8-21
ILMT.MINUS 8-22
ILMT.PLUS 8-23
Increment/Decrement 4-33
Index of Commands 4-36
Install to Hard Drive 2-3
Interface Circuits 3-8

Artisan Technology Group - Quality Instrumentation ... Guaranteed | (888) 88-SOURCE | www.artisantg.com

IPEAK 8-24
IT.THRESH 8-26
ITF0 8-25

J

J31 3-1
J32 3-6

K

KIP 8-27
KPI 7-9, 8-28
KPP 7-7, 8-29
KVFF 7-8, 8-30
KVI 7-6, 8-31
KVP 8-32

L

Load Inertia 7-2
  Compensation 4-13, 4-22

M

Main menu 2-4, 4-3
Manual, how to use 1-2
Menu Functions 4-4
  table 4-4
MODEL 8-33
MOTOR 8-34
Motor Data 4-12, 4-21
Motor Part Number 4-11, 4-20
Movement Keys 2-4
Multidrop communication 4-9
Multiplicative Changes 4-34

N

”New” Set up 4-10, 4-19
New Setup Screen 4-19
Non-optically isolated configuration 3-11
Non-standard motors 4-12, 4-21
Non-volatile memory 4-30
NVLOAD 8-35
NVSAVE 4-14, 8-36

O

OFFSET 8-37
OFFSET Calculation 4-17
Open screen 4-24
Opening a Disk File 2-10
Open a parameter file 4-24
Options menu 4-4,4 -7
  axis selection 4-9
  communications set up 4-8
  controller set up 4-10
  find AXIS.ADDR 4-10
  display set up 4-8
  introduction 4-7
  procedure 4-7
  unconfigure controller 4-15
  zeroing OFFSET 4-16
Order of Parameters 5-5, 5-10, 5-15
Overshoot 7-9

P

Parameter-Edit Screen 4-3, 4-6
Parameters 5-5, 5-9, 5-14
PC requirements 4-1
POLECOUNT 8-38

Artisan Technology Group - Quality Instrumentation ... Guaranteed | (888) 88-SOURCE | www.artisantg.com

Port Configuration 2-5
Screen 4-9
POS.COMMAND 8-42
POSCMD.SET 8-40
POSITION 8-39
Position command 5-12
Position Control 5-10
Position feedback 5-13
Position Loop 7-7
compensation 5-13
Printing 4-26
Problems
with High Inertia 7-4
Programming
instructions 8-4
PULSEGEAR 8-43
PULSES.IN 5-2, 8-44
PULSES.OUT 8-45

Q

Quick Reference 8-1

R

RATIO 6-1,8-46
Resonances 7-4
Reviewing Parameters 2-8
Requirements
host PC 4-1
RS-232 Connections 3-4
RS-232/RS-485 Converter Installation 3-6
RS-485 Connection 3-5

S

Save As Parameter File 4-25
Saving a file 4-25
Saving Parameters 2-9
Scaling ICMD 5-4, 5-8
Selecting address 3-3
Selecting Bandwidth 4-13, 4-22
Setting Up Controller 4-2
Setting up Hardware 1-1
Shelling to DOS 4-26
Single Ended TTL Totem Pole Line Driver 3-10
Single-ended TTL Line Driver 3-9
Slaving
to Master Encoder 6-1
Specifications A-1
Status display B-1
Step & Direction
Inputs 3-13
Timing 3-13
Step Size 6-4
STEPDIR 8-48

T

TACHSCALE 8-49
Torque Control 4-2

U

Unconfigure Controller 4-15
Upload from Controller 4-28
Upload Screen 4-28

Artisan Technology Group - Quality Instrumentation ... Guaranteed | (888) 88-SOURCE | www.artisantg.com

V

Variables Window 2-7, 4-32
VELOCITY 2-7, 8-50
Velocity Control 5-6
Velocity feed forward 5-13
Velocity loop 7-1, 5-14
  Bandwidth 7-1
  Compensation 5-8
Velocity scale factor 7-8

W

Warranty 1-2

Z

Zeroing OFFSET 4-16

Artisan Technology Group - Quality Instrumentation ... Guaranteed | (888) 88-SOURCE | www.artisantg.com

Artisan Technology Group

Artisan Technology Group is your source for quality new and certified-used/pre-owned equipment

- FAST SHIPPING AND DELIVERY
- TENS OF THOUSANDS OF IN-STOCK ITEMS
- EQUIPMENT DEMOS
- HUNDREDS OF MANUFACTURERS SUPPORTED
- LEASING/MONTHLY RENTALS
- ITAR CERTIFIED SECURE ASSET SOLUTIONS

SERVICE CENTER REPAIRS
Experienced engineers and technicians on staff at our full-service, in-house repair center

InstraView℠ REMOTE INSPECTION
Remotely inspect equipment before purchasing with our interactive website at ***www.instraview.com*** ↗

WE BUY USED EQUIPMENT
Sell your excess, underutilized, and idle used equipment
We also offer credit for buy-backs and trade-ins
www.artisantg.com/WeBuyEquipment ↗

LOOKING FOR MORE INFORMATION?
Visit us on the web at ***www.artisantg.com*** ↗ for more information on price quotations, drivers, technical specifications, manuals, and documentation

Contact us: (888) 88-SOURCE | sales@artisantg.com | www.artisantg.com