Artisan Technology Group

# Artisan Technology Group is your source for quality new and certified-used/pre-owned equipment

- FAST SHIPPING AND DELIVERY
- TENS OF THOUSANDS OF IN-STOCK ITEMS
- EQUIPMENT DEMOS
- HUNDREDS OF MANUFACTURERS SUPPORTED
- LEASING/MONTHLY RENTALS
- ITAR CERTIFIED SECURE ASSET SOLUTIONS

**SERVICE CENTER REPAIRS**
Experienced engineers and technicians on staff at our full-service, in-house repair center

**InstraView℠ REMOTE INSPECTION**
Remotely inspect equipment before purchasing with our interactive website at ***www.instraview.com*** ↗

**WE BUY USED EQUIPMENT**
Sell your excess, underutilized, and idle used equipment
We also offer credit for buy-backs and trade-ins
***www.artisantg.com/WeBuyEquipment*** ↗

**LOOKING FOR MORE INFORMATION?**
Visit us on the web at ***www.artisantg.com*** ↗ for more information on price quotations, drivers, technical specifications, manuals, and documentation

***Contact us:*** (888) 88-SOURCE | sales@artisantg.com | www.artisantg.com

901-058 Rev 01.2 10/07/02

# DaVinci VIDEO

## *Ultra High Video Graphics PMC Module*

## Key Features:

- Provides Ultra High Resolution Video Graphics on a Single PMC Module
- Support for 1280x1024 at 16 Million Colors
- 64-BitBLT Graphic Engine with 2/4MB of RAM
- Support for Windows NT®, VxWorks®, QNX® and Linux® Operating Systems
- Single +5V Operation
- Onboard Video BIOS

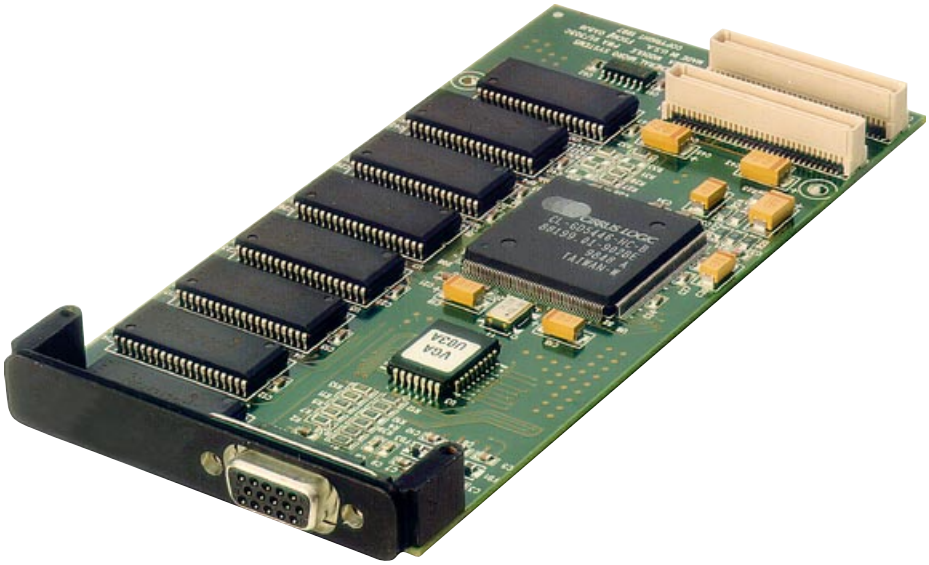

ISO 9001 REGISTERED

PROUDLY MADE IN THE USA — USA GSA — GSA APPROVED

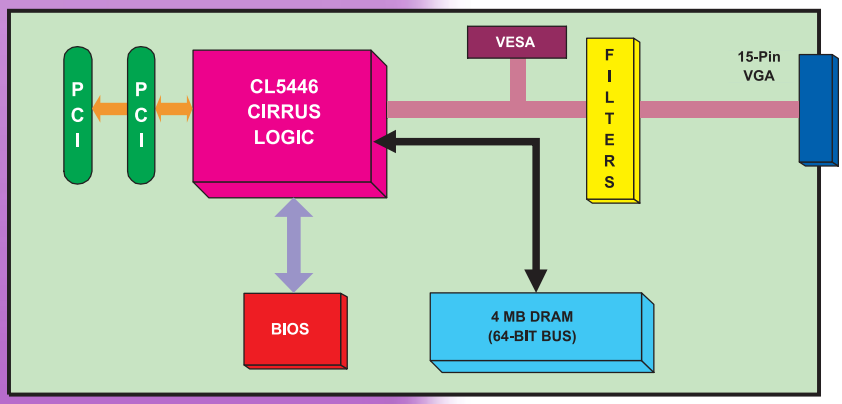



**SALES:**
**1-800-307-4863**
www.gms4sbc.com
E-mail: sales@gms4sbc.com

**CORPORATE OFFICE:**
8358 Maple Place P.O. Box 3689
Rancho Cucamonga, California 91730
Tel: (909) 980-4863 Fax: (909) 987-4863


**Application areas include:**

❒ Industrial ❒ Military ❒ Telecommunications
❒ Pre-Press ❒ Aerospace ❒ Medical ❒ Imaging

*"Redefining Embedded Real-Time Computer Design"*
*Since 1979*

GENERAL MICRO SYSTEMS INC


Artisan Technology Group - Quality Instrumentation ... Guaranteed | (888) 88-SOURCE | www.artisantg.com

## General DESCRIPTION

The GMS "DaVinci" PMC Video module, is a high-resolution video display and graphics module for embedded systems that are equipped with PMC (PCI Mezzanine Card) expansion slots. Supporting display resolutions of up to 1280 x 1024 with 16 million colors, the GMS PMC Video features a 64-bit BitBLT graphics engine equipped with either two or four Mbytes of RAM.

GMS PMC Video targets embedded industrial and military applications like factory automation, telecommunications, imaging, and pre-press that require a rugged high-resolution video display. GMS PMC Video can be installed on any baseboard that provides PMC expansion slots, including General Micro Systems' own family of VMEbus, or CompactPCI CPU boards.

GMS PMC Video provides an inexpensive means of adding high-resolution video to baseboards not so equipped. GMS PMC Video may also be used to add a second video port to baseboards already equipped with video. This option is ideal for applications like CAD, video editing and telemetry that require two monitors. In a CAD application, for example, designers typically use one monitor to work on their drawing, and one to display the CAD tool menus. Similarly, in a video editing application, one screen could be used to display the editing toolbox, with the other used to display the source footage and output.

GMS PMC Video features a 32-Bit PCI bus interface with bus master capability and meets all IEEE-P1386 specifications for single-slot operation. GMS PMC Video also provides a standard 15-pin DIN video connector, which eliminates the need for custom cable assemblies.

To simplify integration with the baseboard, the GMS PMC Video comes ready to run with an onboard video BIOS and is supported by Windows NT®, VxWorks®, QNX®, and Linux® operating systems. GMS PMC Video complies fully with the VESA standard for monitor timing and operates from a single +5V supply.

**Application areas include:**

❒ Industrial ❒ Military ❒ Telecommunications
❒ Pre-Press ❒ Aerospace ❒ Medical ❒ Imaging

## GMS Profile:

*Since its founding in 1979, General Micro Systems, Inc. (GMS) has been a leading supplier of high-performance, embedded, single-board computers for applications ranging from aerospace and defense, to imaging and telecommunications, and industrial control. Today, GMS offers a broad range of highly integrated VMEbus and CompactPCI single-board computers based on high-performance microprocessors such as the Pentium®, 68K, PowerPC®, ColdFire®, and SPARC®. The company also supports a variety of popular operating systems, including Windows NT, VxWorks, QNX, Solaris x86, and Linux.*

*Headquarters in Rancho Cucamonga, California*

All trademarks are owned by their respective companies.

**YOUR AUTHORIZED REPRESENTATIVE IS:**

GENERAL MICRO SYSTEMS INC

Artisan Technology Group

# Artisan Technology Group is your source for quality new and certified-used/pre-owned equipment

- FAST SHIPPING AND DELIVERY
- TENS OF THOUSANDS OF IN-STOCK ITEMS
- EQUIPMENT DEMOS
- HUNDREDS OF MANUFACTURERS SUPPORTED
- LEASING/MONTHLY RENTALS
- ITAR CERTIFIED SECURE ASSET SOLUTIONS

**SERVICE CENTER REPAIRS**
Experienced engineers and technicians on staff at our full-service, in-house repair center

**InstraView℠ REMOTE INSPECTION**
Remotely inspect equipment before purchasing with our interactive website at ***www.instraview.com*** ↗

**WE BUY USED EQUIPMENT**
Sell your excess, underutilized, and idle used equipment
We also offer credit for buy-backs and trade-ins
***www.artisantg.com/WeBuyEquipment*** ↗

**LOOKING FOR MORE INFORMATION?**
Visit us on the web at ***www.artisantg.com*** ↗ for more information on price quotations, drivers, technical specifications, manuals, and documentation

***Contact us:*** (888) 88-SOURCE | sales@artisantg.com | www.artisantg.com