Invaritar™ Large-Field Telecentric Gauging Lenses

The Invaritar™ modular large-field telecentric gauging lenses provide a wide range of solutions for a variety of machine vision applications.

A telecentric lens system is created by combining a base lens with an appropriate attachment lens to achieve the required magnification and field of view.

- Telecentric performance (less than 0.5-degree chief ray angle over the entire object field) allows precise gauging of three-dimensional objects.
- Large selection of base and attachment lenses covers most applications.
- Low distortion provides highly accurate images.
- Lockable aperture adjusts to select the required depth of field.
- C-mount lenses include fine focus adjustment, providing sharper images.
- High-performance multilayer coatings provide the highest image clarity, especially for backlit applications.
- Both C- and F-mount base lenses are available.

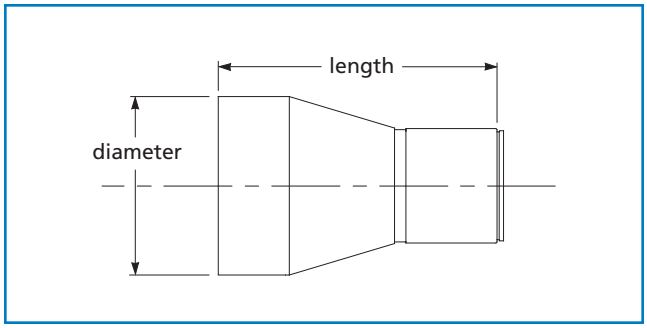

Invaritar™ attachment lens

Invaritar™ Attachment Lenses

Length (mm/in.)	Diameter (mm/in.)	Weight (kg/lb)	PART NUMBER
121/4.8	84/3.3	0.64/1.40	59 LGH 416
206/8.1	121/4.8	1.76/3.87	59 LGJ 423
269/10.6	150/5.9	4.00/8.80	59 LGL 428
275/10.8	84/3.3	0.81/1.78	59 LGH 431

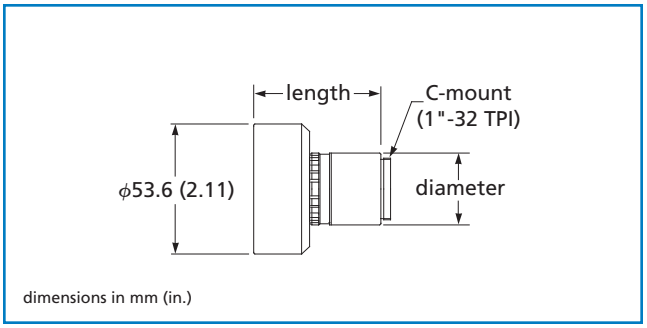

Invaritar™ base lens (C-Mount)

Invaritar™ Base Lens (C-Mount)

Length (mm/in.)	Diameter (mm/in.)	Weight (kg/lb)	PART NUMBER
53/2.1	30/1.2	0.08/0.17	59 LGG 925
46/1.8	30/1.2	0.08/0.17	59 LGG 935
47/1.9	30/1.2	0.08/0.17	59 LGG 950
96/3.8	50/2.0	0.32/0.70	59 LGC 916

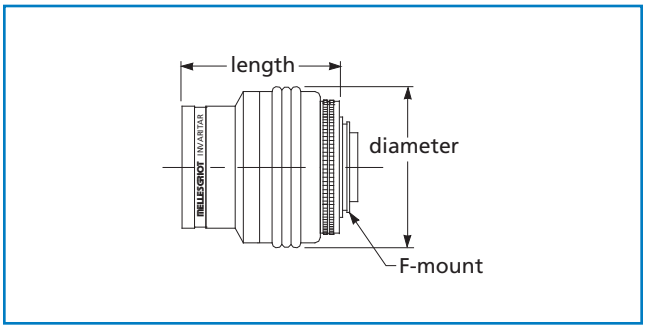

Invaritar™ base lens (F-Mount)

Invaritar™ Base Lens (F-Mount)

Length (mm/in.)	Diameter (mm/in.)	Weight (kg/lb)	PART NUMBER
74/2.9	76/3.0	0.4/0.8	59 LGB 435
57/2.2	76/3.0	0.4/0.9	59 LGB 450
68/2.7	82/3.2	0.6/1.3	59 LGB 485

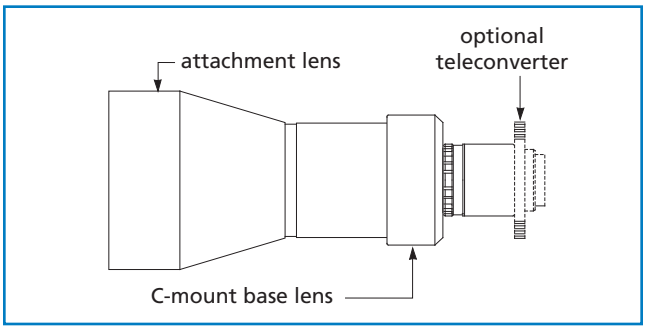

C-mount lens assembly

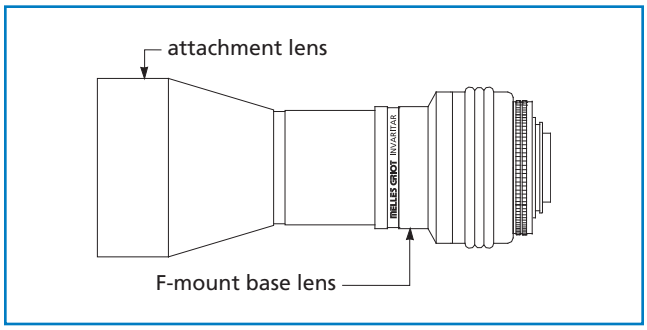

F-mount lens assembly

Optical Specifications for C-Mount Lens Assemblies

Magnification (nominal)	Working Distance (mm/in.)	Maximum Object Dimension (mm)[1] 1/3 in. CCD	1/2 in. CCD	2/3 in. CCD	Minimum f/#[2]	Depth of Field (mm/in.)[3]	PART NUMBER Base Lens	Attachment Lens
0.06 ×	257 / 10.1	54.6 × 73.01	N/A	N/A	2.0	176.89	59 LGC 916	59 LGL 428
0.07 ×	212 / 8.3	44.8 × 59.78	N/A	N/A	2.8	127.0	59 LGC 916	59 LGJ 423
0.09 ×	257 / 10.1	36.3 × 48.3	48.3 × 64.5	66.5 × 88.6	2.0	81.5 / 3.21	59 LGG 925	59 LGL 428
0.10 ×	257 / 10.1	32.5 × 43.2	N/A	N/A	5.6	66.0	59 LGC 916	59 LGH 416
0.11 ×	212 / 8.3	29.7 × 39.6	39.6 × 53.1	54.6 × 72.9	2.8	54.6 / 2.15	59 LGG 925	59 LGJ 423
0.11 ×	302 / 11.9	28.7 × 38.4	38.4 × 51.1	N/A	2.8	54.6 / 2.15	59 LGG 935	59 LGH 431
0.13 ×	257 / 10.1	25.9 × 34.5	34.5 × 46	47.5 × 63.2	2.8	39.1 / 1.54	59 LGG 935	59 LGL 428
0.15 ×	212 / 8.3	21.3 × 28.4	28.4 × 37.8	39.1 × 52.1	5.6	29.2 / 1.15	59 LGG 935	59 LGJ 423
0.16 ×	153 / 6.0	20.8 × 27.7	27.7 × 36.8	38.1 × 50.8	11.0	25.9 / 1.02	59 LGG 925	59 LGH 416
0.16 ×	302 / 11.9	20.1 × 26.9	26.9 × 35.8	36.8 × 49.3	2.8	25.9 / 1.02	59 LGG 950	59 LGH 431
0.18 ×	257 / 10.1	18.0 × 24.1	24.1 × 32.3	33.3 × 44.2	5.6	20.3 / 0.80	59 LGG 950	59 LGL 428
0.22 ×	153 / 6.0	14.7 × 19.8	19.8 × 26.4	27.2 × 36.1	11.0	13.7 / 0.54	59 LGG 935	59 LGH 416
0.22 ×	212 / 8.3	15.0 × 19.8	19.8 × 26.7	27.4 × 36.6	5.6	13.7 / 0.54	59 LGG 950	59 LGJ 423
0.31 ×	153 / 6.0	10.4 × 13.7	13.7 × 18.3	19.1 × 25.4	11.0	6.9 / 0.27	59 LGG 950	59 LGH 416

[1] The maximum object dimensions shown in the table are 90% of the theoretical maximum dimensions, providing a safety factor for magnification and alignment errors.
[2] Lenses operated at a smaller f-number may show reduced resolution, especially near the edge of the field of view.
[3] Depth of field is calculated at f/11 for lenses with minimum operating f/# < f/16 (f/22 for all others) and for 30-μm allowable blur at the image (camera) plane.
Note: Distortion is less than 2% for all lenses. Contact CVI Melles Griot for specific distortion characteristics for a particular lens.

Optical Specifications for F-Mount Lens Assemblies

Magnification (nominal)	Working Distance (mm/in.)	Maximum Object Dimensions for 1-inch CCD[1] (in.)	Minimum f/#[2]	Depth of Field (mm/in.)[3]	PART NUMBER Base Lens	Attachment Lens
0.13 ×	257 / 10.1	2.61 × 2.61	16.0	56.9 / 2.24	59 LGB 435	59 LGL 428
0.15 ×	212 / 8.3	2.14 × 2.14	16.0	42.7 / 1.68	59 LGB 435	59 LGJ 423
0.18 ×	257 / 10.1	1.83 × 1.83	16.0	29.7 / 1.17	59 LGB 450	59 LGL 428
0.22 ×	152 / 6.0	1.49 × 1.49	16.0	19.8 / 0.78	59 LGB 435	59 LGH 416
0.22 ×	212 / 8.3	1.50 × 1.50	16.0	19.8 / 0.78	59 LGB 450	59 LGJ 423
0.27 ×	302 / 11.9	1.19 × 1.19	2.8	9.1 / 0.36	59 LGB 485	59 LGH 431
0.30 ×	257 / 10.1	1.07 × 1.07	16.0	10.7 / 0.42	59 LGB 485	59 LGL 428
0.31 ×	152 / 6.0	1.04 × 1.04	16.0	9.9 / 0.39	59 LGB 450	59 LGH 416
0.37 ×	212 / 8.3	0.88 × 0.88	16.0	7.1 / 0.28	59 LGB 485	59 LGJ 423
0.53 ×	152 / 6.0	0.61 × 0.61	8.0	2.3 / 0.09	59 LGB 485	59 LGH 416

[1] The maximum object dimensions shown in the table are 90% of the theoretical maximum dimensions for 9.2-mm × 9.2-mm (Kodak MegaPlus®) format sensor. The maximum dimension includes a safety factor for magnification and alignment errors. For larger arrays, contact Melles Griot.
[2] Lenses operated at a smaller f-number may show reduced resolution, especially near the edge of the field of view.
[3] Depth of field is calculated at f/11 for lenses with minimum operating f/# < f/16 (f/16 for all others) and for 30-μm allowable blur at the image (camera) plane.
Note: An accessory C-mount adaptor (59 LGT 101) is required for coupling F-mount Invaritar™ base lenses to a C-mount camera.
Note: Distortion is less than 2% for all lenses. Contact CVI Melles Griot for specific distortion characteristics for a particular lens.