Artisan Technology Group

Artisan Technology Group is your source for quality new and certified-used/pre-owned equipment

- FAST SHIPPING AND DELIVERY
- TENS OF THOUSANDS OF IN-STOCK ITEMS
- EQUIPMENT DEMOS
- HUNDREDS OF MANUFACTURERS SUPPORTED
- LEASING/MONTHLY RENTALS
- ITAR CERTIFIED SECURE ASSET SOLUTIONS

SERVICE CENTER REPAIRS
Experienced engineers and technicians on staff at our full-service, in-house repair center

InstraView℠ REMOTE INSPECTION
Remotely inspect equipment before purchasing with our interactive website at ***www.instraview.com*** ↗

WE BUY USED EQUIPMENT
Sell your excess, underutilized, and idle used equipment
We also offer credit for buy-backs and trade-ins
www.artisantg.com/WeBuyEquipment ↗

LOOKING FOR MORE INFORMATION?
Visit us on the web at ***www.artisantg.com*** ↗ for more information on price quotations, drivers, technical specifications, manuals, and documentation

Contact us: (888) 88-SOURCE | sales@artisantg.com | www.artisantg.com

Bulletin 210-60
OCTOBER 1994

THERMOSTATIC EXPANSION VALVES

IDENTIFICATION

To completely identify a SPORLAN thermostatic expansion valve the following information is required:

1. Type of valve (body style)
2. Refrigerant
3. External equalizer
4. Capacity in tons of refrigeration or port size
5. Type of thermostatic charge
6. Thermostatic bulb size if other than standard
7. Suffix letters—if any—indicate permanent bleed port or Rapid Pressure Balancer construction. (All valves except Types A & D)
8. Inlet and outlet connection sizes and style
9. Capillary tubing length
10. Prefix letters or number if any

For detailed explanation see Sections 1 thru 10.

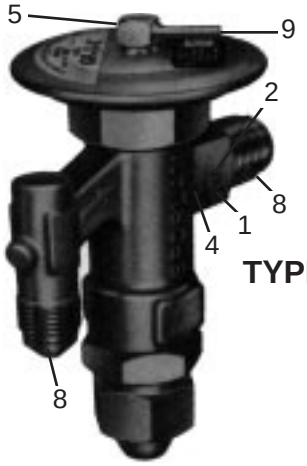

TYPE G

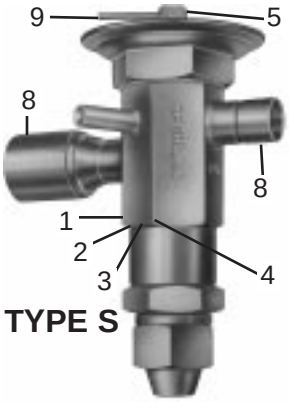

TYPE S

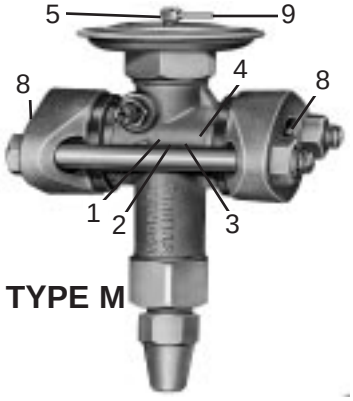

TYPE M

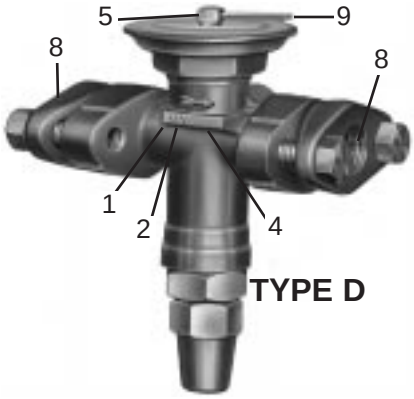

TYPE D

To completely identify a SPORLAN thermostatic element the following information is required:

A. Element size number
B. Refrigerant
C. Thermostatic charge
D. MOP (Maximum operating Pressure) if other than standard
E. Capillary tubing length
F. Bulb size if other than standard (See Section 6)

For detailed explanation see Sections 5, 6 and 9.

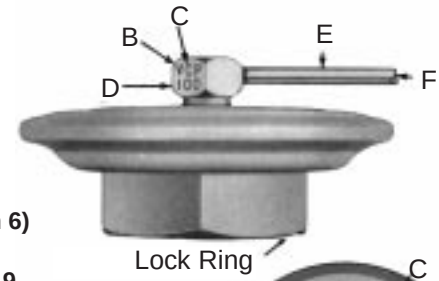

Replaceable Thermostatic Elements manufactured after 1991 had the element number and thermostatic charge marked on top of the element.

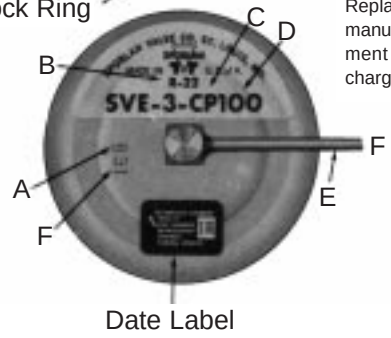

Refrigerant Designation, Letter and Color Code Used on Decals.

H - R-11- Blue	**J -** R-134a - Blue
F - R12 - Yellow	**L -** R-402A - Sand
E - R-13 - Blue	**S -** R-404A - Orange
T - R-13B1- Blue	**D -** R-500 - Orange
V - R-22 - Green	**R -** R-502 - Pulple
G - R-23 - Blue	**W -** R-503 - Blue
B - R-114 - Blue	**P -** R-507 - Teal
Q - R124 ~ Green	**A** - R-717 - White

Artisan Technology Group - Quality Instrumentation ... Guaranteed | (888) 88-SOURCE | www.artisantg.com

1. TYPE VALVE - Sporlan thermostatic expansion valves are available in three body styles — SAE flare, ODF solder, or flange. The first letter or letters stamped on the valve body and shown on the label designates the valve type. Valve types are listed below.

Valve Types (STANDARD)

BF	SAE Flare	**RIVE**	SAE Flare or ODF Solder
C	SAE Flare	**S**	ODF Solder
D	FPT or Socket Weld	**SBF**	Extended ODF Solder
EBF	Extended ODF Solder	**V**	ODF Solder Flange
EBS	Extended ODF Solder	**W**	ODF Solder Flange
F	SAE Flare	**A**	FPI or Socket Weld
G	SAE Flare		
EG	ODF Solder		**Valve Types (OEM)**
H	ODF Solder Flange	**BI**	SAE Flare or ODF Solder
M	ODF Solder Flange	**FB**	SAE Flare or ODF Solder
NI	SAE Flare	**K**	ODF Solder
O	ODF Solder	**I**	SAE Flare or ODF Solder
P	ODF Solder	**X**	SAE Flare or ODF Solder

2. REFRIGERANT - Sporlan valves are available for use with most popular refrigerants. The letter stamped on the valve body following the valve type and shown on the label designates the refrigerant. Refrigerant designations are as follows:

H	- R-11-Blue	**J**	- R-134a - Blue
F	- R-12 - Yellow	**L**	- R-402A - Sand
E	- R-13 - Blue	**S**	- R-404A - orange
T	- R-13B1 - Blue	**D**	- R-500 - orange
v	- R22 - Green	**R**	- R-502 - Purple
G	- R-23 - Blue	**W**	- R-503 - Blue
B	- R-114-Blue	**P**	- R-507 - Teal
Q	- R-124 - Green	**A**	- R-717-White

3. EXTERNAL EQUALIZER - The letter "E" immediately following the letter designating the refrigerant is used to denote an external equalizer connection. Physical inspection of the valve will reveal whether or not an external equalizer connection has been provided.

4. CAPACITY IN TONS of REFRIGERATION or PORT SIZE - For all current production valves except the Types (E)BF & SBF, the number following the letters indicates the valve's nominal capacity rating in tons. For example, a valve marked GF-1 is a Type G valve for Refrigerant 12 with a one ton nominal capacity rating. A valve marked SVE-5 is an externally equalized Type S valve for Refrigerant 22 with a five ton nominal capacity rating.

All current production Types (E)BF and SBF valves, and Type (E)BS valves, manufactured prior to 1992 use a letter code designation to indicate its capacity rating. Letter codes are listed in Table A along with their nominal capacity ranges.

TABLE-A — (E)BF & (E)BS CAPACITY CODES

Valve Type	Capacity Code	Nominal Capacity Range		
		R-12	R-22	R-502
(E)BF SBF	AA	1/8 — 1/3	1/8 — 2/3	1/8 — 1/3
	A	1/2 — 1	3/4 — 1-1/2	1/2 — 1
	B	1-1/4 — 1-3/4	1-3/4 — 3	1-1/4 — 2
	C	2 — 3	3-1/4 — 5-1/2	2-1/4 — 3
(E)BS	D	4 — 7	7 — 11	4 — 7-1/2

For ammonia valves, (Types A & D) the valve's nominal capacity rating is determined by the outlet discharge tube size and the port size in the valve body. Therefore, the rating can be read from the valve label as shown in Figure 1, or it can be determined by the port and discharge tube size. Ammonia valves are the only valves which have their port size stamped on the body. Prior to January 1954, the valve type and port size were stamped on the topside of the outlet flange for both the Types A & D valve. After this time, this marking was relocated to a boss on the side of the valve body for the Type D valve only. See Page 1.

Listed in Table B are the port and discharge tube sizes, and their associated nominal capacity ratings for the Types A & D valves.

TABLE-B — DISCHARGE TUBE & PORT SIZES

Valve Type	Nominal Capacity Rating (R-717)	Port Size (in)	Discharge Tube Orifice (in)
D	1	1/16	1/32
	2	1/16	1/16
	5	7/64	5/64
	10	3/16	7/64
	15	3/16	5/32
A	20	5/16	1/8
	30	5/16	5/32
	50	3/8	3/16
	75	3/8	none
	100	7/16	none

5. REFRIGERANT and THERMOSTATIC CHARGE IN ELEMENT - The label on the power element diaphragm case carries designations pertaining to type — charge — capacity and refrigerant. Immediately below the label and stamped in the top of the diaphragm case is a number which indicates the lock ring thread size of the element. This number designates the "element size." See Figure 1.

Prior to 1959 a single digit was used — e.g. 8 — after that time and prior to 1960 a second digit was added to indicate a modified construction — e.g. 81. Subsequent to 1960 this second digit was changed from "1" to "2" and in 1966 from "2" to "3" — e.g. 83 — to indicate further modifications. All current elements are designated with the suffix "3" with the exception of numbers 7 and 1 — their designations are 7 and 12 respectively. See the valve availability guide, Table-F, Page 4, for a cross reference between valves and element sizes.

Further identification of the element is provided by the use of two or three letters and sometimes two or three numbers marked on top of the element. The first letter indicates the refrigerant and the second letter (and third if used) the selective charge of the element. Numbers, if used, indicate a special MOP or maximum operating pressure. (For refrigerant identification refer to Section 2). Prior to 1992, the refrigerant code and selective charge designation were stamped on the side of the capillary button on top of the diaphragm case. See Figure 1. The Selective Charges C, CP, Z, ZP, VGA, and X are generally applied in the range of temperatures shown in Table-C.

TABLE-C
RECOMMENDED THERMOSTATIC CHARGES

REFRIGERANT	AIR CONDITIONING OR HEAT PUMP	COMMERCIAL REFRIGERATION +50°F. to -10°F.	LOW TEMPERATURE REFRIGERATION 0°F. to -40°F.	EXTREME TEMPERATURE REFRIGERATION -40°F. to -100°F.
12	FCP60	FC	FZ, FZP	—
22	VCP100, VGA	VC	VZ, VZP40	VX
134a	JCP60	JC	—	—
401A	XCP60	XC	—	—
402A	—	LC	LZ, LZP	LX
404A	SCP115	SC	SZ, SZP	SX
502	RCP115	RC	RZ, RZP	RX
507	—	PC	PZ, PZP	PX

The Sporlan Type ZP thermostatic charges have essentially the same characteristics as the conventional Z Cross charges with one exception. They produce a pressure limit or MOP without the use of mechanical devices used in double diaphragm valves. The ZP charges are not intended as replacements for the Z charges — they should only be used where a definite pressure limit is required to prevent motor overloading.

A conventional Type L liquid charge is also available for all commonly used refrigerants in most of our element sizes.

The Types U, O, and K charges formerly used on Ammonia valves have been redesignated Types L, C, and Z respectively, to make them conform with the corresponding charges used on other refrigerants.

Artisan Technology Group - Quality Instrumentation ... Guaranteed | (888) 88-SOURCE | www.artisantg.com

A Type VCP, Refrigerant 22 air conditioning or heat pump charge with a 100 psig limit is stamped "VCP100." See Figure-1 Page 1.

Table D lists the standard Type "P" charge MOP's.

TABLE-D
GA, CP,and ZP Charged Valves

Refrigerant	① Thermostatic Charge	Mop-PSIG Factory Air Test	Nominal System
12	FCP60	60	50
	FZP	20	12
22	VGA	110	② 100
	VCP100	100	90
	VCP40	40	30
	VZP	30	20
134a	JCP60	60	50
401A	XCP60	60	50
402A	LZP	45	35
404A	SCP115	115	105
	SZP	45	35
502	RCP115	115	105
	RZP	45	35
507	PZP	45	35

①A numerical suffix on a thermostatic charge designation indicates a special MOP. Omission of the number indicates standard MOP as shown.
②Not as well defined as the other Type "P" charges listed in this table.
Example: VCP100 charge has a special air test MOP of 100.

The above system of identification of elements has been in effect since 1936. However, from 1936 to 1943 the letters indicating "refrigerant" and "type of charge" were stamped on the top of the diaphragm case along with the element size number, instead of on the diaphragm case button. Prior to 1936 elements were identified by a serial number. Beginning in 1948 a decal was affixed to the thermostatic element. Therefore, element identification must include lock ring size number, refrigerant, charge, capillary tubing length and pressure limit where applicable.

6. THERMOSTATIC BULB SIZE - The following bulb sizes listed in Table E are standard and are supplied in the majority of instances. When a non-standard ***oversized*** bulb is used on a thermostatic element a third digit, "1", is added to the "element size" designation — e.g. "831" for a Number 83 element with a large bulb. (See Section 5, Page 2 for complete explanation of element nomenclature).

7. PERMANENT BLEED PORT or RAPID PRESSURE BALANCER CONSTRUCTION — Air conditioning or refrigeration systems employing split phase or PSC motors which have low starting torques, require high to low side pressure equalization prior to restarting.

A ***permanent bleed port valve*** incorporates an internal bypass or bleed that remains open at all times. Even when the valve closes on system shut down, the bleed permits a continued flow of refrigerant until the pressures are equalized.

In addition to the usual body stampings signifying body type, refrigerant etc., the permanent bleed rate is also stamped on the body for percent bleeds up to and including 50%. For example a bleed rate equivalent to 10% of nominal capacity is shown as "BP/10."

Permanent bleeds in excess of 50% of nominal capacity are not stamped on the body — a Y number prefix is used to signify this special feature. (See Section 10, Page 4).

The ***RPB Valve*** presents a major change in the design of thermostatic expansion valves. The RPB bleed is actuated only on the off cycle. Immediately after shut down the evaporator pressure rises and the pin carrier moves to the closed position as in a conventional valve. However, with the RPB design the pin carrier continues its motion and opens the secondary spring loaded bleed port allowing rapid equalization of high and low side pressures. Upon restarting the compressor the secondary bleed port closes and the valve functions in the normal manner. If the RPB feature is incorporated in a valve, the letters "RPB" are stamped on the body. For example—SVE-3-CPl00-RPB.

8. INLET and OUTLET CONNECTION SIZES and STYLE- The style — flare, flanged or solder — and the size of the inlet and outlet connections can be determined visually.

9. CAPILLARY TUBING LENGTH - Sporlan Thermostatic Expansion Valves are generally supplied with elements having capillary tubing in increments of 30" and 5 feet. other capillary tube lengths are also available. The length of the capillary tubing can be easily measured.

TABLE-E
STANDARD BULB SIZES — Inches

Refrigerant	Charge	Element Size					
		NI (non-replaceable)	Number 43	Number 53	Number 83	Number 33	Number 63
12	FCP60	0.50 OD X 3.00	0.50 OD X 3.00	0.50 OD X 3.00	0.50 OD X 3.50	0.75 OD X 4.00	0.88 OD X 6.00
	FC					0.50 OD X 5.00	
	FZ			0.38 OD X 4.50		0.50 OD X 5.00	
	FZP			0.50 OD X 3.50		0.75 OD X 4.00	
22	VGA		0.75 OD X 2.00	0.75 OD X 2.00	0.75 OD X 2.00	0.75 OD X 4.00	0.75 OD X 4.00
	VCP100		0.50 OD X 3.00	0.50 OD X 3.50	0.50 OD X 3.50	0.75 OD X 4.00	0.88 OD X 6.00
	VC						
	VZ						
	VZP						
	VX		N/A	0.75 OD X 4.00	0.75 OD X 4.00		
134a	JCP60		0.50 OD X 3.00	0.50 OD X 3.50	0.50 OD X 3.50	0.75 OD X 4.00	0.88 OD X 6.00
	JC					0.50 OD X 5.00	
502	RCP115		0.50 OD X 3.00	0.50 OD X 3.50	0.50 OD X 3.50	0.75 OD X 4.00	0.88 OD X 6.00
	RC						
	RZ						
	RZP						
	RX		N/A	0.75 OD X 4.00	0.75 OD X 4.00		

Artisan Technology Group - Quality Instrumentation ... Guaranteed | (888) 88 SOURCE | www.artisantg.com

10. PREFIX LETTERS - N - Indicates non-adjustable superheat construction when used as prefix to basic valve type specification. — e.g. NSVE-3-GA. Adjustable bottom cap assembly kits are available for field conversion to a standard adjustable valve. See Page 5.

H - Indicates hermetic construction and Manufacturer's Warranty generally is void if the valve is removed from system or disassembled. Therefore, replacements and repair parts are ***NOT*** available. All valves of this type are also nonadjustable.

Y-Number - When a basic valve type is preceded by the prefix Y and a number, it indicates a special construction made for a particular equipment manufacturer. While some of the parts may be standard and interchangeable, complete valves are generally available only through the equipment manufacturer. A typical designation would be Y335-CVE-2-CP100. This particular valve has a 60% permanent bleed and a special superheat spring and should not be replaced by a standard valve.

VALVE DATE - All new valves are marked to show the week and year in which they were manufactured. The date code consists of either three or four digits: a one or two digit week code, and a two digit year code. Thus, "889" and "1189" refer to the eighth and eleventh week of 1989. Since a full year exceeds 52 weeks by either one or two days, a 53rd week will occasionally be assigned, extending into the following year. These markings indicate the date of manufacture of the valve only and have no reference to valve type, refrigerant, capacity, or type of charge. Prior to 1989, a sticker placed on the thermostatic element indicated what quarter and year the valve was manufactured. Thus, D87 indicates the last quarter of 1987 and C89 indicates the third quarter of 1989.

DATE CODE STICKER PRIOR TO 1989

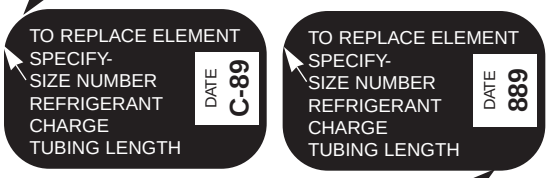

CURRENT DATE CODE STICKER

(See Figure-1, Page 1, for location on element.)

FURTHER AIDS TO IDENTIFICATION - Valve identification markings illustrated on Page 1 apply to all types presently manufactured by Sporlan Valve Company. Types G, S, M and D are used as examples. As an aid in identifying discontinued types of valves which are still in operation, the following data applies. From 1934 through 1936, all valves were identified by means of a serial number. Since 1937 the valve type and refrigerant have been stamped on the body of the valve. Capacities of valves from 1936 to 1944 were shown in either port sizes or tons capacity. However, since January 1944, all valves except Ammonia valves have been marked in tons capacity rather than port sizes. Numbers cast into the external valve parts merely indicate the pattern number of the valve body and are of no value in determining refrigerant, capacity or type of thermostatic charge. They are listed in the valve availability guide Table F, below.

VALVE AVAILABILITY GUIDE

TABLE-F — CURRENT VALVE TYPES

③ Valve Type	NOMINAL CAPACITY Tons of Refrigeration				Connection Style	Element Size No.	① Body Casting No.
	12, 134a, 401A	22	402A, 404A, 502 507	717			
⑧ NI	1/8, 1/4, 1/2, 1	1/4, 1/2, 1	1/4, 1/2, 1	—	SAE Flare	43	—
⑧ RIVE	—	2, 3, 4, 5	—		SAE Flare or ODF Solder		
F	1/8, 1/4, 1/2, 1, 1-1/2, 2	1/4, 1/2, 1, 1-1/2, 2, 2-1/2, 3	1/8, 1/4, 1/2, 1, 1-1/2, 2		SAE Flare or ODF Solder		
⑦ (E)BF and SBF	NOMINAL CAPACITY CODES AA, A, B, & C						
Q	1/6, 1/4, 1/2, 1, 1-1/2, 2, 2-1/2	1/3, 3/4, 1, 1-1/2, 2-1/2, 3-1/2, 5	1/6, 1/4, 1/2, 1, 1-1/2, 2, 3				
⑥ G	1/8, 1/4, 1/2, 1-1/2, 2	1/5, 1/3, 1/2, 1, 1-1/2, 2, 2-1/2, 3	1/8, 1/4, 1/2, 1, 1-1/2, 2		SAE Flare	53	
EG					ODF Solder		
⑥ C	2-1/2, 3, 5	4, 5, 8	3, 4, 6		SAE Flare	83	
S	2, 2-1/2, 3, 5, 6	2, 3, 4, 5, 8, 10	2, 3, 4, 6, 7		ODF Solder		
EBS	7	11	7-1/2				
④P	1-1/2, 3, 4, 5, 8, 12	2-1/2, 5-1/2, 7, 11, 16, 20	1-1/2, 3, 4, 6-1/2, 9, 12		ODF Solder Flange	33	
④H							
M	5, 7-1/2, 11, 13, 15, 20, 25	8, 12, 18, 21, 26, 34, 42	9, 15, 20, 25, 30			63	107-E
O 83	6, 9, 12, 16	10, 15, 20, 30	6, 9, 12, 21		ODF Solder	83	—
O 33	23, 32, 40	40, 55, 70	30, 35, 45			33	
K	35, 45, 55	52, 70, 100	38, 50, 70			63	707-A
V					ODF Solder Flange		
W	80, 110	135, 180	100, 130			② 63 and 7	707-B
D	—	—	—	1, 2, 5, 10, 15	Pipe Flange	23	⑤ 207A
A				20, 30, 50, 75, 100		12	107

NOTE: Adapter Kit K-1178 allows the use of current Type large H to replace obsoleted Types small T and small H and also earlier obsoleted Types U, C and small O

① Body casting number **CANNOT** be used for ordering.

② Number 63 element used on WFE-80, WDE-95, WVE-135 and WRE-100. Number 7 element used on WFE-110, WDE-130, WVE-180, and WRE-130.

③ In addition to the standard line of thermostatic expansion valves listed here, special valve types are manufactured to fill OEM requirements. These valves include Types BI, I, X and FB valves. For replacement valves, contact either the OEM, your Sporlan Wholesaler or Sporlan Valve Company.

④ The Types P and H valves were re-rated october 1970 in conformance with ARI Standard 750 as shown in the table.

⑤ Casting number appears on early models only

⑥ Types G and C valves which use the mechanical pressure limit (PL-type) thermostatic element will have the MOP stamped on the diaphragm case button. The PL- type element is now obsolete. Refer to Bulletin 210-10-17 for additional information.

⑦ Refer to Bulletins 10-10 and 10-10-3 for information on the application of Types (E) BF and SBF valves.

⑧ During 1994, Types NI and RI valves were modified from a non-replaceable to a replaceable No. 43 element design.

Artisan Technology Group - Quality Instrumentation ... Guaranteed | (888) 88-SOURCE | www.artisantg.com

REPLACEMENT PARTS ORDERING INFORMATION
INTERNAL VALVE PARTS KITS

Internal valve parts kits are available for all Sporlan Thermostatic Expansion Valves — Both current and discontinued types — with the exception of the Types NI, AIF, X, I, and early models of the Types V and W, and some models of Types G, S, & C. These valves are constructed so that field replacement of internal parts is not recommended.

TABLE-G — INTERNAL VALVE PARTS KITS for Current Valve Types

VALVE TYPES	Internal or External Equalizer	NOMINAL CAPACITY Tons of Refrigeration			KIT No.
		12, 134a, 401A	22	402A, 404A, 502, 507	

The following Kits contain: 1 Seat, 1 Pin & Carrier, 2 Push Rods, Push Rod Gauge. **Type G valves with external equalizer, Type S valves dated B69 or later and Type C valves dated C70 or later have packless push rod construction. Due to the close tolerances, kits are not available for packless valves.** The following internal parts kits are not to be used with packless valves.

G	Internal	1/4	1/2	1/4	KP01 0002
		1/2	1	1/2	KP01 0005
		1	1-1/2	1	KP01 0010
		1-1/2	2-1/2	1-1/2	KP01 0015
C	External	1	1-1/2	1	KP02 0010
	Internal	1-1/2	2	1-1/2	KP03 0015
	External				KP02 0015
	Internal	2	3	2	KP03 0020
	External				KP02 0020
	Internal	2-1/2	4	3	KP03 0025
	External				KP02 0025
	Internal	3	5	4	KP03 0030
	External				KP02 0030
	External	5	8	6	KP02 0050
S	Internal	1/4	1/2	1/4	KP03 0002
	Internal	1/2	1	1/2	KP03 0005
	External				KP02 0005
	Internal	1	1-1/2	1	KP03 0010
	External				KP02 0010
	Internal	1-1/2	2	1-1/2	KP03 0015
	External				KP02 0015
	Internal	2	3	2	KP03 0020
	External				KP02 0020
	Internal	2-1/2	4	3	KP03 0025
	External				KP02 0025
	Internal	3	5	4	KP03 0030
	External				KP02 0030
	External	5	8	6	KP02 0050
	External	6	10	7	KP02 0060

The following Kits contain: 1 Seat, 1 Pin & Carrier, 2 Push Rods, 1 Seal Cap Gasket, Push Rod Gauge.

P	Int. or Ext.	1-1/2	2-1/2	1-1/2	KP12 0015
	Int. or Ext.	3	5-1/2	3	KP12 0030
	Int. or Ext.	4	7	4	KP12 0040
	Int. or Ext.	5	11	6-1/2	KP12 0050
	Int. or Ext.	8	16	9	KP12 0080
	External	12	20	12	KP12 0120

The following Kits contain: 1 Seat, 1 Pin & Carrier, 2 Push Rods, 2 Flange Gaskets, 1 Seal Cap Gasket, Push Rod Gauge.

H	Int. or Ext.	1-1/2	2-1/2	1-1/2	KP13 0015
	Int. or Ext.	3	5-1/2	3	KP13 0030
	Int. or Ext.	4	7	4	KP13 0040
	Int. or Ext.	5	11	6-1/2	KP13 0050
	Int. or Ext.	8	16	9	KP13 0080
	External	12	20	12	KP13 0120

VALVE TYPES	Internal or External Equalizer	NOMINAL CAPACITY Tons of Refrigeration			KIT No.
		12, 134a, 401A	22	402A, 404A, 502, 507	

The following Kits contain: 1 Push Rod and Seal Assembly, Piston, Bottom Cap, Spring Guide, Seal Cap, (models with No. 33 elements include a Gasket), Push Rod Gauge, and set of instructions.

O	83	External	6	10	6	KP19 0060
			9	15	9	KP19 0090
			12	20	12	KP19 0120
			16	30	21	KP19 0160
	33		23	40	30	KP20 0230
			32	55	35	KP20 0320
			40	70	45	KP20 0400

The following Kits contain: 1 Seat, 1 Pin & Carrier, 2 Push Rods; the following gaskets: 1 Element, 2 Flanges, 1 Bottom Cap, 1 Seal Cap, Push Rod Gauge.

M	External	5	8	—	KP08 0050
		7-1/2	12	9	KP08 0075
		11	18	—	KP08 0110
		13	21	15	KP08 0130
		15	26	20	KP08 0150
		20	34	25	KP08 0200
		25	42	30	KP08 0250

The following Kits contain: 1 Eiement Gasket, 2 Flange Gaskets, 1 Bottom Cap Gasket, 1 Seal Cap Gasket, 1 Push Rod, 1 Push Rod Gauge, 1 Piston Assembly, 1 Seat Refinishing Tool with Grit Cloth, 1 Set of Instructions. These Kits are for use with V Valves dated B65 or later and for W Valves dated A66 or later See Bulletin 210-40-2.

V, K	External	35	52	38	KP16 0350
		45	70	50	KP16 0450
		55	100	70	
W	External	80	135	100	KP17 0800
		110	180	130	

REFRIGERANT 717 (Ammonia)

The following Kits contain: 1 Seat, 1 Pin & Carrier, 2 Push Rods; the following gaskets: 1 Element, 2 Flanges, 1 Bottom Cap, 1 Seal Cap, Push Rod Gauge.

D	Int. or Ext.	1, 2	KP10 0010
	Int. or Ext.	5	KP10 0050
	Int. or Ext.	10, 15	KP10 0100
A	Int. or Ext.	20, 30	KP09 0200
	Int. or Ext.	50, 75	KP09 0500
	Int. or Ext.	100	KP09 1000

BOTTOM CAP ASSEMBLY KITS

The following Kits allow field conversion from a non-adjustable to an adjustable valve type. See Section 10 on Page 4.

VALVE TYPE	KIT No.	CONTENTS
G, G(PL), C, C(PL), S, T	KA-8	Adjustable bottom cap assembly and seal cap
P, H, U	KA-3	
F, (E) BF, SBF	KA-4	
*X	KA-5X	

*For Type-X Valve with Straight Through Connections only

Artisan Technology Group - Quality Instrumentation ... Guaranteed | (888) 88-SOURCE | www.artisantg.com

TABLE-H — DISCONTINUED VALVE TYPES

Valve Type	NOMINAL CAPACITY Tons of Refrigeration			Port Size Inches	Connection Type	⑧ Element No.	Body Casting No.	Body Material	Replaced by Current Valve Type
	12	22	500						
A	10	—	—	5/16	ODF Solder Flange	1	107	Grey Cast Iron	M
	15	—	—	3/8					
	20	—	—	7/16					
B	2	3	—	3/16	ODF Solder	4	—	Brass Bar	S
	3	5	—	.209					
⑨ ⑫ C	3	—	—	3/16	ODF Solder Flange	2	207	Grey Cast Iron	H
	6	—	—	1/4					
E	1	1-1/2	—	7/64	SAE Flare	4	—	Brass Forging	G, C
	2	3-1/2	—	3/16					
	3	5	—	.209					
F	1	1-1/2	—	7/64	SAE Flare	2	—	Brass Forging	G, C
	2	3-1/2	—	5/32					
	3	5	—	3/16					
H (small)	1/2	—	—	1/16	SAE Flare	4	407-A	Brass Forging	G
	1	—	—	7/64					
H (large)	3	—	—	3/16		2	307-C		CFE-3
⑨ H (small)	5	8	6	7/32	ODF Solder Flange	3	—	Brass Bar	H
	—	10	—	.228					
	7-1/2	12	9	1/4					
	—	15	—	17/64					
J, K	—	1/2	—	1/32	ODF Solder	J-4 K-5	—	Brass Bar	S
	1/2	1	—	1/16					
	1	1-1/2	—	7/64					
	1-1/2	2-1/2	—	1/8					
L	1/2	—	—	1/16	ODF Solder	2	—	Brass Bar	S, Small O
	1	1-1/2	—	7/64					
	2	3-1/2	—	5/32					
	3	5	—	3/16					
	6	11	—	1/4					
	10	17	—	9/32					
10 11 O	2	3-1/2	—	5/32	ODF Solder Flange	2	—	Brass Bar	H
	3	5	—	3/16					
	6	10	—	1/4					
	10	16	—	9/32					
9 P	10	—	—	5/16	ODF Solder Flange	1	107-C	Grey Cast Iron	M
	15	—	—	3/8					
	20	—	—	7/16					
Q	—	21	—	11/32	ODF Solder	6	—	Grey Cast Iron or Brass	M
	—	26	—	5/16					
	—	34	—	3/8					
	—	42	—	7/16					
⑭ R (small)	—	1/2	—	1/32	ODF Solder	8	—	Brass Bar	S
	1/2	1	1/2	1/16					
	1	1-1/2	1	7/64					
	1-1/2	2-1/2	1-1/2	1/8					
⑬ R (large)	3	—	—	3/16	ODF Angle Solder Flange	2	807	Grey Cast Iron	H
	6	—	—	1/4					
	10	—	—	9/32			807-A		
⑬ S	10	—	—	5/16	ODF Angle Solder Flange	1	507	Grey Cast Iron	M
	15	—	—	3/8					
	20	—	—	7/16					
⑪ T (small)	1-1/2	2	—	5/32	ODF Solder Flange	8	—	Brass Bar	S
	2	3	2-1/2	1/8					
	2-1/2	4	3	5/32					
	3	5	3-1/2	.209					
⑩ T (large)	50	—	—	Double Port		1	707	Bronze Casting	VFE-55
⑪ U (small)	2	3-1/2	—	3/*16	ODF Solder Flange	4	—	Brass Bar	H
	3	5	—	.209					
U (large)	12	22	15	Double Port	ODF Solder	3	—	Brass Bar	Small O, Large O
	17	30	21						
	23	40	28						
Z	SEE PAGE 7					Permanent			RI

⑨ Prior to 1959 a single digit was used — e.g. 8 — after that time and prior to 1960 a second digit was added to indicate a modified construction. Refer to Table J for current thermostatic elements.

⑩ For the following valve types the flanges are DIRECTLY INTERCHANGEABLE, therefore the current valve type may be directly substituted tor the discontinued type.

Discontinued Type	Current Type
Large O (9/32" Port)	H
P & Large T	M & V

⑪ Adapter Kit K-1178 allows the use of current Flanged Type H to replace obsoleted Flanged Types small T and small H and also earlier obsoleted Types U, C and small O ('/4" Port and smaller)

⑫ Manulactunsd prior to 1944. ⑬ Manufactured prior to 1945. ⑭ Manufactured prior to 1960.

Artisan Technology Group - Quality Instrumentation ... Guaranteed | (888) 88-SOURCE | www.artisantg.com

TABLE-H (Con't) — REFRIGERANT 717 (Ammonia)

Valve Type	NOMINAL CAPACITY Tons of Refrigeration 717	Port Size Inches	Discharge Tube Orifice Inches	Connection Type	Element No.	Body Casting No.	Body Material	Replaced by Current Valve Type
11 C, E, F, N	1	1/16	1/32	FPT (E) FPT Flange (C, F, N)	—	—	Grey Cast Iron	D
	2	1/16	1/16					
	5	7/64	5/64					
	10	3/16	7/64					
	15	3/16	1/8					
J, K	100	7/16	—	FPT Flange	—			AA(E)-100
PC, PN	1	1/16	1/32	FPT Flange	(AEV)			—
	2	1/16	1/16					
	5	7/64	5/64					
	10	3/16	7/64					
	15	3/16	1/8					

For footnote 11 ~ information, see bolltom of Page 6.

CROSS-REFERENCE FOR CURRENT TYPES C, S, P, H, M, & V

The Types P, H, M, and V valves were re-rated in August 1957 as shown in the table below. The re-rated Types P and H valves were later obsoleted or re-rated in October 1970 (with the exception of the PFE-5 and HFE-5), and replaced with the Types P and H valves listed below.

PORT SIZE Inches	REFRIGERANT-12			REFRIGERANT-22			REFRIGERANT-500		
	Prior to Aug 1957	Aug 1957 to Oct 1970	Current	Prior to Aug 1957	Aug 1957 to Oct 1970	Current	Prior to Aug 1957	Aug 1957 to Oct 1970	Current
7/32	—	PFE-5	PFE-5	PVE-8	PVE-8	PVE-11	PDE-5	PDE-6	PDE-5
0.228	—	—	—	—	PVE-10	—	—	—	—
0.277	—	—	PFE-8	—	—	PVE-16	—	—	PDE-8
1/4	PFE-6	PFE-7-1/2	PFE-12	PVE-11	PVE-12	PVE-20	PDE-8	PDE-9	PDE-14
17/64	—	—	—	—	PVE-15	—	—	—	—
9/32	PFE-10	PFE-11	—	PVE-17	PVE-18	—	PDE-13	PDE-13	—
15 7/32	—	HFE-5	HFE-5	HVE-8	HVE-8	HVE-11	HDE-5	HDE-6	HDE-5
0.228	—	—	—	—	HVE-10	—	—	—	—
0.277	—	—	HFE-8	—	—	HVE-16	—	—	HDE-8
15 1/4	HFE-6	HFE-7-1/2	HFE-12	HVE-10	HVE-12	HVE-20	HDE-7-1-2	HDE-9	HDE-14
17/64	—	—	—	—	HVE-15	—	—	—	—
9/32	HFE-10	HFE-11	—	HVE-16	HVE-18	—	HDE-12	HDE-13	—

15 In May 1966 the small T and small H valves were discontinued and the large H was made available in the lower nominal capacity ranges also. The large H may be adapted to existing small T and small H flanges by using adapter kit K-1178.

PORT SIZE Inches	REFRIGERANT-12		REFRIGERANT-22		REFRIGERANT-500	
	Prior to Aug 1957	Current	Prior to Aug 1957	Current	Prior to Aug 1957	Current
5/16	MFE-12	MFE-15	MVE-21	MVE-26	MDE-14	MDE-18
3/8	MFFE-17	MFE-20	MVE-30	MVE-34	MDE-20	MDE-25
7/16	MFE-22	MFE-25	MVE-40	MVE-42	MDE-26	MDE-30
Small	VFE-35	VFE-35	WE-52	WE-52	VDE-42	VDE-40
Medium	—	VFE-45	—	WE-70	—	VDE-55
Large	VFE-50	VFE-55	WE-90	WE-100	VDE-60	VDE-65
Small	WFE-75	WFE-80	WVE-135	WVE-135	WDE-90	WDE-95
Large	WFE-100	WFE-110	WVE-180	WVE-180	WDE-120	WDE-130

The Types C and S valves were re-rated in January 1957 as shown in the following table

Refrigerant	Port Size	Nominal Tons	
		Old	New
12	1/8	1-1/2	2
	5/32	2	2-1/2
22	1/8	2-1/2	3
	5/32	3	4
500	1/8	1-1/2	2-1/2
	5/32	2	3

Z VALVE NOMENCLATURE

The Type Z valve was a special TEV manufactured from 1969 to 1983 for certain small capacity R-22 air conditioning applications. This valve featured an integral refrigerant distributor. In addition, its nomenclature differs from the other TEVs, and an explanation is provided below.

To replace a Type Z valve, a TEV and a refrigerant distributor must be selected. The Type RI valve is normally recommended as the replacement TEV.

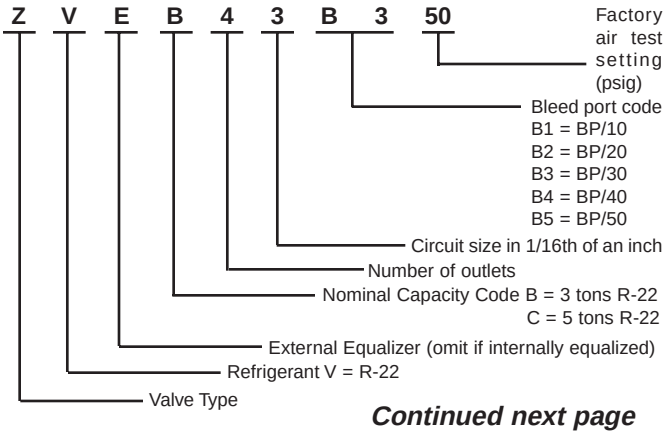

Continued next page

TYPES BS & CS SUBCOOLING VALVE NOMENCLATURE

The Types BS and CS subcooling valves were special thermostatically controlled expansion devices designed to control the amount of subcooling at the outlet of the condenser. They were first manufactured in 1970 for the Westinghouse Hi-Re-Li air conditioning and heat pump systems. The operation of these valves differ from conventional thermostatic expansion valves. As a result, they must be replaced with the same type of valve.

The subcooling valve nomenclature also differs from the other TEVs, and an explanation is provided below:

BS 838 35 RA

- RA — thermostatic charge
- 35 — bleed port code
- 838 — pin and port code
- BS — valve type

TABLE-I
INTERNAL VALVE PARTS KITS for Discontinued Valve Types

VALVE TYPES	Internal or External Equalizer	NOMINAL CAPACITY Tons of Refrigeration 12	22	500	502	KIT No.
The following Kits contain: 2 Seats, 1 Pin~& Carrier 2 Push Rods, Push Rod gauge.						
NO LONGER K AVAILABLE	Internal	1/4	1/2	—	1/4	K-14-1/32
		1/2	1	1/2	1/2	K-14-1-16
		1	1-1/2	1	1	K-14-7/64
		1-1/2	2-1/2	—	1-1/2	K-14-1/8
The following Kits contain: 1 Seat, 1 Pin & Carrier 2 Push Rods, Push Rod Gauge.						
NO LONGER R AVAILABLE	Internal	—	1/2	—	—	DK-11-1/32
	Internal	1/2	1	1/2		DK-11-1/16
	External	—				DK-11E-1/16
	Internal	1	1-1/2	1		DK-11-7/64
	External					DK-11E-7/64
	Internal	1-1/2	2-1/2	1-1/2		DK-11-1/8
	External					DK-11E-1/8
The following Kits contain: 1 Seat, 1 Pin & Carrier 2 Push Rods, 2 Flange Gaskets, Push Rod Gauge.						
NO LONGER T AVAILABLE	Internal	1-1/2	2	—	—	DK-15-5/32T
	External					DK-15E-5/32T
	Internal	2	3	2-1/2		DK-15-1/8
	External					DK-15E-1/8
	Internal	2-1/2	4	3		DK-15-5/32
	External					DK-15E-5/32
	Internal	3	5	3-1/2		DK-15-.209
	External					DK-15E-.209
The following Kits contain: 1 SealCup Gasket, 1 Pushrod, 1 Pushrod Gauge, 1 Piston Assembly, 1 Seat Refinishing Tool with Grit Cloth, 1 Set of Instructions.						
NO LONGER U AVAILABLE	External	12	22	15	16	DKP-18-0120
		17	30	21	22	DKP-18-0170
		23	40	28	30	
The following Kits contain: 1 Seat, 1 Pin & Carrier, 2 Push Rods, 1 Seat Cap Gasket, Push Rod Gauge.						
P	Int. or Ext.	5	8	6	6	DK-12-7/32
	External	—	10	—	7-1/2	DK-12-0.228
	Int. or Ext.	7-1/2	—	9	—	DK-12-1/4
	External	—	15	—	11	DK-12-17/64
		11	18	13	13	DK-12-9/32

TABLE-I (Cont.)

The following Kits contain: 1 Seat, 1 Pin & Carrier, 2 Push Rods, 4 Flange Gaskets (2 for Small H and 2 for Large H), 1 Seal Cap Gasket, Push Rod Gauge.

H	Int. or Ext.	1-1/2	2	—	—	DK-13-7/64
	Int. or Ext.	3	5	—	—	DK-13-5/32
	Int. or Ext.	5	8	6	6	DK-13-7/32
	External	—	10	—	7-1/2	DK-13-0.228
	Int. or Ext.	7-1/2	12	9	—	DK-13-1/4
	External	—	15	—	11	DK-13-17/64
		11	18	13	13	DK-13-9/32
The following Kits contain: 1 Seat, 1 Pin & Carrier, 2 Push Rods; the following Gaskets: 1 Element. 2 Flanges 1 Bottom Cap. 1 Seal Cap, Push Rod Gauge.						
M	External	12	21	18	—	DK-8-5/16
		17	30	25		DK-8-3/8
		22	40	30		DK-8-7/16

TABLE-J
THERMOSTATIC ELEMENT KITS
Specify Refrigerant, Thermostatic Charge & Tubing Length
Refer to Seclions 5, 6 and 9 for detailed information.

CURRENT VALVE TYPES

VALVE TYPE	KIT NUMBER	KIT CONTENTS
A	KT-12	⑯
D	KT-23	
P, H, Large O	KT-33	⑰
F, (E)BF	KT-43	
G, X	KT-53	
② M, V, K, W	KT-63	⑯
C, S, Small O	KT-83	⑰

DISCONTINUED VALVE TYPES

VALVE TYPE	KIT NUMBER	KIT CONTENTS
K	KT-53	⑰
Small R & T	KT-83	
U	KT-33	

② No. 63 element used on WFE-80, WDE-95 and WVE-135. No. 7 element used on WFE-110, WDE-130 and WVE-180.
⑯ 1 Thermostatic Element, 2 Bulb Clamps, 1 Top Gasket, Instruction Bulletin.
⑰ 1 Thermostatic Element, 2 Bulb Clamps, Instruction Bulletin.

Artisan Technology Group - Quality Instrumentation ... Guaranteed | (888) 88-SOURCE | www.artisantg.com

Artisan Technology Group

Artisan Technology Group is your source for quality new and certified-used/pre-owned equipment

- FAST SHIPPING AND DELIVERY
- TENS OF THOUSANDS OF IN-STOCK ITEMS
- EQUIPMENT DEMOS
- HUNDREDS OF MANUFACTURERS SUPPORTED
- LEASING/MONTHLY RENTALS
- ITAR CERTIFIED SECURE ASSET SOLUTIONS

SERVICE CENTER REPAIRS
Experienced engineers and technicians on staff at our full-service, in-house repair center

InstraView℠ REMOTE INSPECTION
Remotely inspect equipment before purchasing with our interactive website at ***www.instraview.com*** ↗

WE BUY USED EQUIPMENT
Sell your excess, underutilized, and idle used equipment
We also offer credit for buy-backs and trade-ins
www.artisantg.com/WeBuyEquipment ↗

LOOKING FOR MORE INFORMATION?
Visit us on the web at ***www.artisantg.com*** ↗ for more information on price quotations, drivers, technical specifications, manuals, and documentation

Contact us: (888) 88-SOURCE | sales@artisantg.com | www.artisantg.com