Artisan Technology Group

Artisan Technology Group is your source for quality new and certified-used/pre-owned equipment

- FAST SHIPPING AND DELIVERY
- TENS OF THOUSANDS OF IN-STOCK ITEMS
- EQUIPMENT DEMOS
- HUNDREDS OF MANUFACTURERS SUPPORTED
- LEASING/MONTHLY RENTALS
- ITAR CERTIFIED SECURE ASSET SOLUTIONS

SERVICE CENTER REPAIRS
Experienced engineers and technicians on staff at our full-service, in-house repair center

InstraView℠ REMOTE INSPECTION
Remotely inspect equipment before purchasing with our interactive website at ***www.instraview.com*** ↗

WE BUY USED EQUIPMENT
Sell your excess, underutilized, and idle used equipment
We also offer credit for buy-backs and trade-ins
www.artisantg.com/WeBuyEquipment ↗

LOOKING FOR MORE INFORMATION?
Visit us on the web at ***www.artisantg.com*** ↗ for more information on price quotations, drivers, technical specifications, manuals, and documentation

Contact us: (888) 88-SOURCE | sales@artisantg.com | www.artisantg.com

Coaxial

Switch

50Ω SPDT, TTL Driver, Reflective DC to 5 GHz

ZYSW-2-50DR

CASE STYLE: ZZ121

Connectors	Model	Price	Qty.
SMA	ZYSW-2-50DR	$59.95	(1-9)
BRACKET (OPTION "B")		$5.00	(1+)

Maximum Ratings

Operating Temperature	-20°C to 85°C
Storage Temperature	-55°C to 100°C
Input Power	
DC-2000MHz	+22dBm
2000-5000MHz	+24dBm

Permanent damage may occur if any of these limits are exceeded.

Coaxial/Pin Connections

RF IN	3
RF OUT 1	2
RF OUT 2	1
TTL-IN	4
+5V	+5VDC
-5V	-5VDC

Features

- wideband, DC to 5 GHz
- fast rise/fall time, 6ns typ.
- low video break thru, 30 mV P-P typ.

Applications

- antenna switching
- instrumentation
- cellular/PCN
- transmitters/receivers
- satellite communications

Electrical Specifications

FREQ. (GHz)		INSERTION LOSS (dB)						1dB COMPR. (dBm)						IN-OUT ISOLATION (dB)					
		DC-500 MHz		500-2000 MHz		2000-5000 MHz		DC-500 MHz		500-2000 MHz		2000-5000 MHz		DC-500 MHz		500-2000 MHz		2000-5000 MHz	
f_L	f_U	Typ.	Max.	Typ.	Max.	Typ.	Max.	Typ.	Min.	Typ.	Min.	Typ.	Min.	Typ.	Min.	Typ.	Min.	Typ.	Min.
DC	5	0.9	1.5	1.3	1.7	2.1	—	20	15	23	19	21	18	44	38	38	28	20	—

Outline Drawing

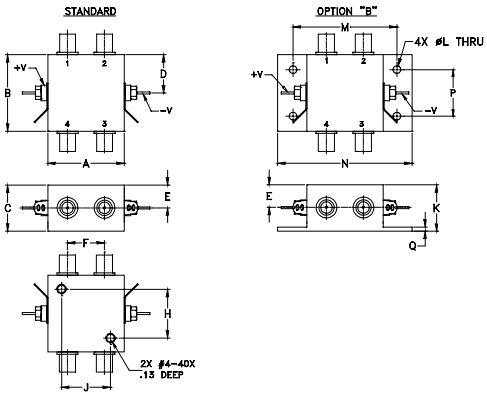

Outline Dimensions (inch / mm)

A	B	C	D	E	F	G	H
1.25	1.25	0.75	0.63	0.38	0.61	--	0.800
31.75	31.75	19.05	16.00	9.65	15.49	--	20.32

J	K	L	M	N	P	Q	wt
0.800	0.76	0.125	1.688	2.18	0.75	0.07	grams
20.32	19.30	3.18	42.88	55.37	19.05	1.78	85

Additional Specifications			
Control Voltage Low Threshold, max. High Threshold, min.	0/5.5, max. 0.8 2.0	VSWR(:1)	1.4 typ., 2.0 max. DC to 3 GHz 2.5 max. 3 to 5 GHz
Control Current, mA	High V: 2 typ., 5 max Low V: 0.2 max.	Rise/Fall time (10%-90%), ns Switching time, 50% of Control to 90% RF(Turn-on), ns 10% RF(Turn-off), ns	6 typ., 12 max. 20 typ., 40 max.
Positive Supply, V	+5+0.5/-0.1		
Negative Supply, V	-5-0.5/+0.1		
Positive Supply Current, mA	20 max.	**Video Leakage, mVp-p 0/-5V Control	30 typ.
Negative Supply Current, mA	20 max.		

1. OFF state at RF output is low impedance
** Video leakage or break through is defined as leakage of TTL switching signal to RF output ports.
2. All RF connections must be DC blocked or held at 0V DC

Control Port	RF outputs	
	1	2
Low	On	Off
High	Off	On

Electrical Schematic

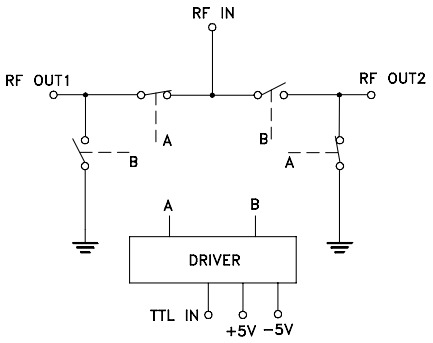

Notes: 1. Performance and quality attributes and conditions not expressly stated in this specification sheet are intended to be excluded and do not form a part of this specification sheet. **2.** Electrical specifications and performance data contained herein are based on Mini-Circuit's applicable established test performance criteria and measurement instructions. **3.** The parts covered by this specification sheet are subject to Mini-Circuits standard limited warranty and terms and conditions (collectively, "Standard Terms"); Purchasers of this part are entitled to the rights and benefits contained therein. For a full statement of the Standard Terms and the exclusive rights and remedies thereunder, please visit Mini-Circuits' website at www.minicircuits.com/MCLStore/terms.jsp.

REV. C
M99070
ZYSW-2-50DR
DJ/TD/CP/AM
111121

Artisan Technology Group - Quality Instrumentation ... Guaranteed | (888) 88-SOURCE | www.artisantg.com

Typical Performance Data

FREQ. (MHz)	ON TTL Low @ 0V) IN-OUT 1		INSERTION LOSS (dB) AMP. UNBAL.		OFF TTL High @ 5V) IN-OUT 1		ISOLATION (dB) DELTA		VSWR IN	VSWR OUT ON	VSWR OUT OFF
	$\bar{x}$	σ	$\bar{x}$	σ	$\bar{x}$	σ	$\bar{x}$	σ	$\bar{x}$	$\bar{x}$	$\bar{x}$
3.00	0.93	0.03	0.01	0.00	82.19	2.73	4.56	2.14	1.20	1.21	5.09
5.00	0.93	0.03	0.01	0.01	81.63	2.81	2.23	1.14	1.21	1.21	5.07
10.00	0.93	0.02	0.01	0.01	75.09	1.32	1.62	0.75	1.21	1.21	5.08
20.00	0.98	0.03	0.05	0.04	69.97	0.76	1.59	1.48	1.21	1.21	5.06
50.00	0.94	0.03	0.01	0.01	63.18	0.95	1.77	0.64	1.20	1.20	5.04
100.00	0.96	0.03	0.01	0.00	57.83	0.41	0.52	0.21	1.20	1.20	5.00
200.00	0.98	0.03	0.01	0.00	52.68	0.23	0.35	0.28	1.20	1.20	4.97
500.00	1.03	0.03	0.00	0.00	45.93	0.26	0.34	0.16	1.23	1.24	4.90
1000.00	1.11	0.03	0.01	0.01	40.28	0.28	0.34	0.14	1.29	1.29	5.01
1150.64	1.11	0.02	0.01	0.01	38.91	0.25	0.37	0.13	1.31	1.31	5.07
1724.45	1.24	0.01	0.03	0.02	34.88	0.27	0.32	0.09	1.33	1.33	5.43
2441.73	1.11	0.01	0.01	0.01	32.17	0.39	0.21	0.13	1.26	1.26	6.07
2561.27	1.17	0.03	0.02	0.02	31.99	0.39	0.14	0.12	1.24	1.23	6.23
2848.18	1.18	0.02	0.01	0.01	31.20	0.40	0.13	0.07	1.20	1.19	5.96
3135.09	1.19	0.09	0.04	0.04	30.98	0.42	0.15	0.17	1.14	1.13	6.12
3708.91	1.22	0.03	0.06	0.02	30.08	0.46	0.38	0.38	1.16	1.13	6.11
4282.73	1.38	0.10	0.11	0.02	28.98	0.46	0.82	0.28	1.33	1.32	6.05
4713.09	1.45	0.04	0.05	0.04	29.12	0.35	0.88	0.29	1.37	1.34	5.07
4856.55	1.51	0.04	0.06	0.04	28.90	0.33	0.84	0.25	1.36	1.39	5.02
5000.00	1.54	0.04	0.06	0.04	28.56	0.30	0.87	0.28	1.35	1.40	4.92

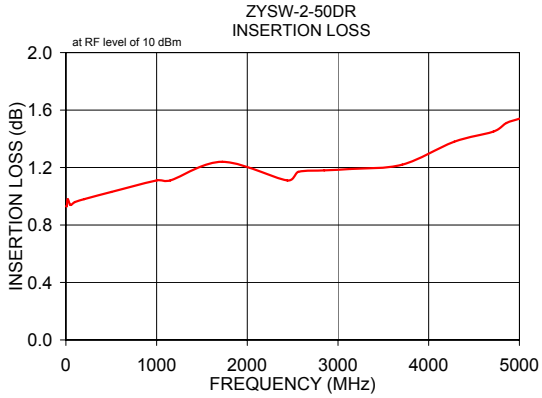

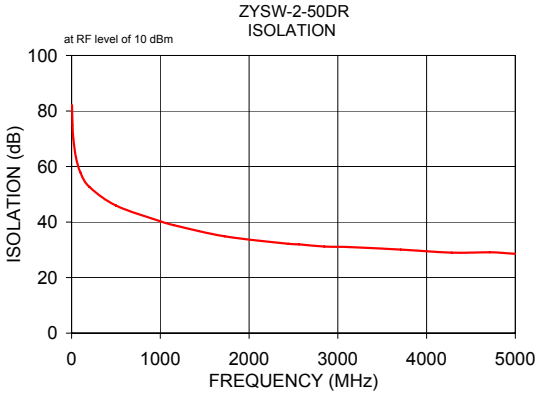

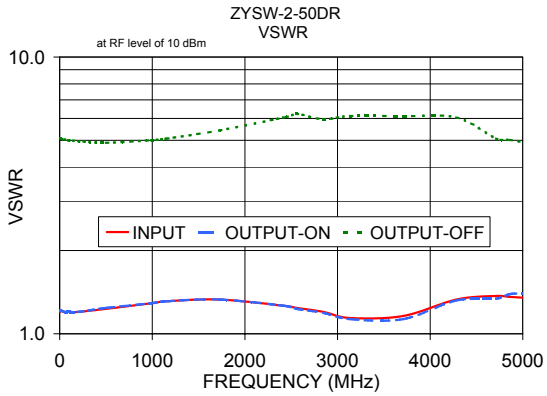

Notes: 1. Performance and quality attributes and conditions not expressly stated in this specification sheet are intended to be excluded and do not form a part of this specification sheet. **2.** Electrical specifications and performance data contained herein are based on Mini-Circuit's applicable established test performance criteria and measurement instructions. **3.** The parts covered by this specification sheet are subject to Mini-Circuits standard limited warranty and terms and conditions (collectively, "Standard Terms"); Purchasers of this part are entitled to the rights and benefits contained therein. For a full statement of the Standard Terms and the exclusive rights and remedies thereunder, please visit Mini-Circuits' website at www.minicircuits.com/MCLStore/terms.jsp.

Artisan Technology Group - Quality Instrumentation ... Guaranteed | (888) 88-SOURCE | www.artisantg.com

Artisan Technology Group

Artisan Technology Group is your source for quality new and certified-used/pre-owned equipment

- FAST SHIPPING AND DELIVERY
- TENS OF THOUSANDS OF IN-STOCK ITEMS
- EQUIPMENT DEMOS
- HUNDREDS OF MANUFACTURERS SUPPORTED
- LEASING/MONTHLY RENTALS
- ITAR CERTIFIED SECURE ASSET SOLUTIONS

SERVICE CENTER REPAIRS
Experienced engineers and technicians on staff at our full-service, in-house repair center

InstraView℠ REMOTE INSPECTION
Remotely inspect equipment before purchasing with our interactive website at ***www.instraview.com*** ↗

WE BUY USED EQUIPMENT
Sell your excess, underutilized, and idle used equipment
We also offer credit for buy-backs and trade-ins
www.artisantg.com/WeBuyEquipment ↗

LOOKING FOR MORE INFORMATION?
Visit us on the web at ***www.artisantg.com*** ↗ for more information on price quotations, drivers, technical specifications, manuals, and documentation

Contact us: (888) 88-SOURCE | sales@artisantg.com | www.artisantg.com