Artisan Technology Group

Artisan Technology Group is your source for quality new and certified-used/pre-owned equipment

- FAST SHIPPING AND DELIVERY
- TENS OF THOUSANDS OF IN-STOCK ITEMS
- EQUIPMENT DEMOS
- HUNDREDS OF MANUFACTURERS SUPPORTED
- LEASING/MONTHLY RENTALS
- ITAR CERTIFIED SECURE ASSET SOLUTIONS

SERVICE CENTER REPAIRS
Experienced engineers and technicians on staff at our full-service, in-house repair center

InstraView℠ REMOTE INSPECTION
Remotely inspect equipment before purchasing with our interactive website at ***www.instraview.com*** ↗

WE BUY USED EQUIPMENT
Sell your excess, underutilized, and idle used equipment
We also offer credit for buy-backs and trade-ins
www.artisantg.com/WeBuyEquipment ↗

LOOKING FOR MORE INFORMATION?
Visit us on the web at ***www.artisantg.com*** ↗ for more information on price quotations, drivers, technical specifications, manuals, and documentation

Contact us: (888) 88-SOURCE | sales@artisantg.com | www.artisantg.com

DBK2

4-Channel D/A Voltage-Output Card

Features

- **14-bit, quad analog output**
- **Features on-board bipolar reference for accurate and stable voltage outputs**
- **Provides per-channel bipolar voltage ranges**

The 4-channel DBK2 D/A voltage-output card provides IOtech's data acquisition systems* with the ability to generate precise bipolar analog voltage outputs. The DBK2's outputs can be programmed with a static value whenever the data acquisition system is not transferring A/D data. The card is particularly useful for applications that require programmable voltage sources or the control of devices such as programmable power supplies. Up to 64 DBK2 cards can be attached to one system for a total of 256 outputs.

Card Architecture. The DBK2 features a quad 14-bit D/A converter that permits it to generate up to a ±5V or ±10V voltage. Voltage ranges are jumper selectable per channel. The card is also equipped with an on-board bipolar reference to ensure accurate and stable output voltages.

Applications. The DBK2's precise voltage output makes it especially useful for applications that require programmable voltage sources or static test-signal generation. It is also ideal for applications that require the control of external devices such as programmable power supplies, proportional actuators, analog indicators, and process controllers*.

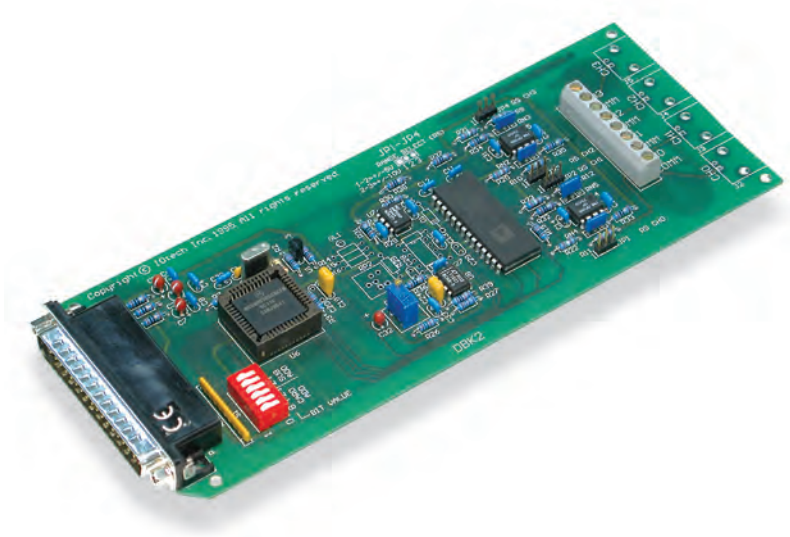

The 4-channel DBK2 allows systems to generate precise bipolar analog voltage outputs

DBK2 D/A Voltage-Output Card Block Diagram

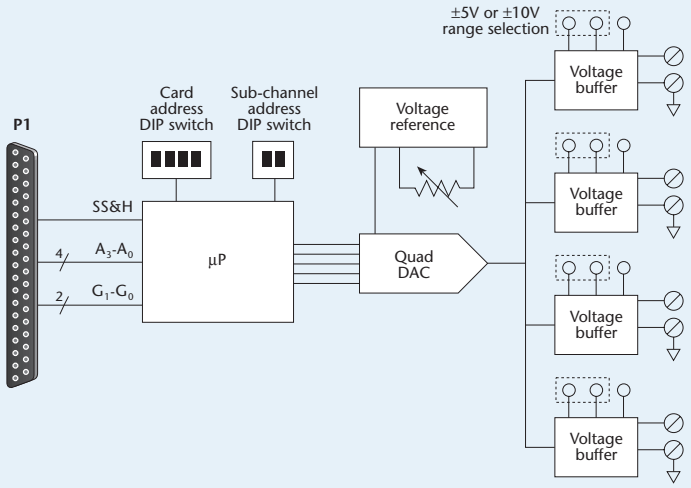

Specifications

Connectors: DB37 male, mates with P1**; screw terminals for signal outputs
Resolution: 14 bit
Output Ranges: ±5V and ±10V (selectable per-channel via jumpers)
Accuracy: 0.05% FS
Linearity: 0.02% FS
Hysteresis: 0.01% FS
Output Current: 5 mA typ
Power Consumption: 565 mW

* Not recommended for closed-loop control greater than 1 Hz
** Attachment to the DaqBoard/2000 Series requires a DBK200, DBK202, DBK203A, DBK209, DBK213, or DBK214

Ordering Information

Description	Part No.
4-channel voltage-output card	DBK2

Cables

For use with DBK10, use CA-37-x ribbon cable, or contact factory of additional cabling options
For use with DBK60 or LogBook/360, no cable is required (except from DBK60 or LogBook/360 to the A/D mainframe)
For use with no enclosure, use CA-37-x where x is the number of DBK devices attached
For use with DaqLab Series (internal slots), use CA-255-2T with one board, or CA-37-2 for use with two DBK cards (or contact factory for additional cabling options)

Product Compatibility

✔ DaqBook
✔ DaqLab
✔ DaqScan
✔ DaqBoard/2000 Series

Artisan Technology Group - Quality Instrumentation ... Guaranteed | (888) 88-SOURCE | www.artisantg.com

Artisan Technology Group

Artisan Technology Group is your source for quality new and certified-used/pre-owned equipment

- FAST SHIPPING AND DELIVERY
- TENS OF THOUSANDS OF IN-STOCK ITEMS
- EQUIPMENT DEMOS
- HUNDREDS OF MANUFACTURERS SUPPORTED
- LEASING/MONTHLY RENTALS
- ITAR CERTIFIED SECURE ASSET SOLUTIONS

SERVICE CENTER REPAIRS
Experienced engineers and technicians on staff at our full-service, in-house repair center

InstraView℠ REMOTE INSPECTION
Remotely inspect equipment before purchasing with our interactive website at ***www.instraview.com*** ↗

WE BUY USED EQUIPMENT
Sell your excess, underutilized, and idle used equipment
We also offer credit for buy-backs and trade-ins
www.artisantg.com/WeBuyEquipment ↗

LOOKING FOR MORE INFORMATION?
Visit us on the web at ***www.artisantg.com*** ↗ for more information on price quotations, drivers, technical specifications, manuals, and documentation

Contact us: (888) 88-SOURCE | sales@artisantg.com | www.artisantg.com