Artisan Technology Group

Artisan Technology Group is your source for quality new and certified-used/pre-owned equipment

- FAST SHIPPING AND DELIVERY
- TENS OF THOUSANDS OF IN-STOCK ITEMS
- EQUIPMENT DEMOS
- HUNDREDS OF MANUFACTURERS SUPPORTED
- LEASING/MONTHLY RENTALS
- ITAR CERTIFIED SECURE ASSET SOLUTIONS

SERVICE CENTER REPAIRS
Experienced engineers and technicians on staff at our full-service, in-house repair center

InstraView℠ REMOTE INSPECTION
Remotely inspect equipment before purchasing with our interactive website at ***www.instraview.com*** ↗

WE BUY USED EQUIPMENT
Sell your excess, underutilized, and idle used equipment
We also offer credit for buy-backs and trade-ins
www.artisantg.com/WeBuyEquipment ↗

LOOKING FOR MORE INFORMATION?
Visit us on the web at ***www.artisantg.com*** ↗ for more information on price quotations, drivers, technical specifications, manuals, and documentation

Contact us: (888) 88-SOURCE | sales@artisantg.com | www.artisantg.com

Intelligent Motion Systems

Excellence in Motion™

IP406 Unregulated Linear Power Supply

Connection, Mounting and Specifications

370 N. Main St., P.O. Box 457, Marlborough, CT 06447
Phone: 860/295-6102, Fax: 860/295-6107
Internet: www.imshome.com, Email: info@imshome.com

DIMENSIONAL INFORMATION

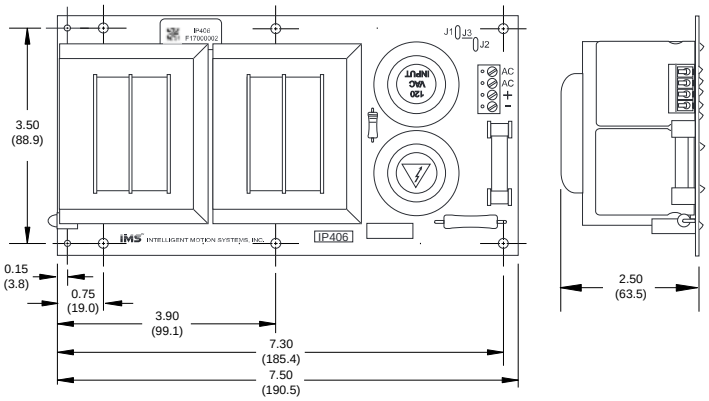

Dimensions in Inches (mm)

IP406 UNREGULATED POWER SUPPLY

The IP406 unregulated linear DC power supply is a small, low cost supply designed to deliver optimum power for top stepper drive performance. It can be either rack or panel mounted and is available in both 115VAC and 240VAC versions.

IP406 (115 VAC, -240 Not Shown)

MOUNTING

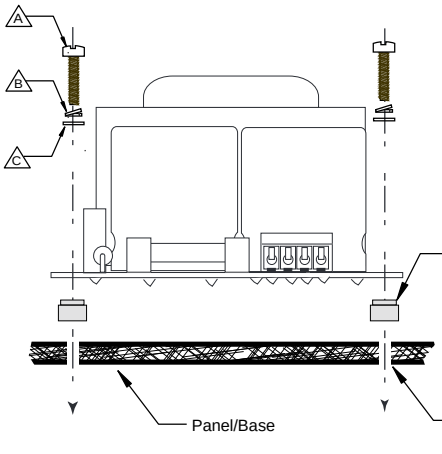

Mounting Hardware - U.S.
A #6 Stainless Machine Screw
B #6 Split Lock Washer (.04 TH, .24 OD)
C #6 Flat Washer, Stainless (.04 TH, .24 OD)

Mounting Hardware - Metric
A #M3 Stainless Machine Screw
B #M3 Split Lock Washer (.08 TH, 6.20 OD)
C #M3 Flat Washer, Stainless (.05 TH, 6.20 OD)

N Ensure adequate clearance between IP406 and panel for all bottom-side PCB connections.

Mounting Screw Torque:
5.0 to 7.0 lb-in
(0.60 to 0.80 N-m)

ELECTRICAL SPECIFICATIONS

Electrical Specifications				
Specification	Min.	Typ.	Max.	Units
AC Input Voltage (IP406)		115	132	VAC
AC Input Voltage (IP406-240)		230	264	VAC
Input Frequency		50 - 60		Hz
Output Voltage (Nominal, No Load)		40		VDC
Output Current		6		A

REPLACEMENT FUSE

7A SLOW BLOW 250V

POWER SUPPLY CONNECTIONS

In connecting the IP406 power supply observe the following:

1) Use shielded, twisted pair wiring between power supply and driver (see driver operating instructions for recommended wiring).
2) Ensure that the power supply output voltage does not exceed the maximum input voltage of the driver used.
3) Tightening torque on the screw terminals should not exceed 4.5 lb-in (0.50 N-m).

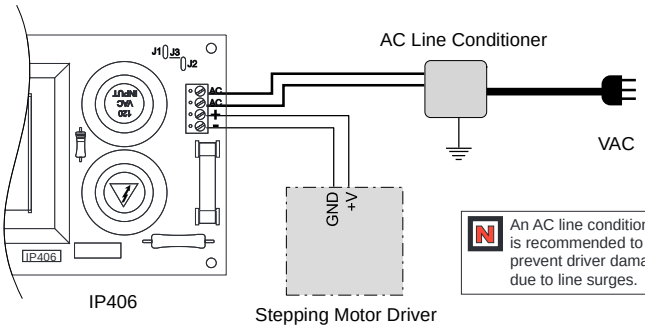

N An AC line conditioner is recommended to prevent driver damage due to line surges.

© 2000 Intelligent Motion Systems, Inc. All rights reserved.
Sold By: Servo Systems Co. • 115 Main Road • P.O. Box 97 • Montville, NJ, 07045-0097
(973) 335-1007 • Toll Free: (800) 922-1103 • Fax: (973) 335-1661 • www.servosystems.com
Artisan Technology Group - Quality Instrumentation ... Guaranteed | (888) 88-SOURCE | www.artisantg.com

Artisan Technology Group

Artisan Technology Group is your source for quality new and certified-used/pre-owned equipment

- FAST SHIPPING AND DELIVERY
- TENS OF THOUSANDS OF IN-STOCK ITEMS
- EQUIPMENT DEMOS
- HUNDREDS OF MANUFACTURERS SUPPORTED
- LEASING/MONTHLY RENTALS
- ITAR CERTIFIED SECURE ASSET SOLUTIONS

SERVICE CENTER REPAIRS
Experienced engineers and technicians on staff at our full-service, in-house repair center

InstraView℠ REMOTE INSPECTION
Remotely inspect equipment before purchasing with our interactive website at ***www.instraview.com*** ↗

WE BUY USED EQUIPMENT
Sell your excess, underutilized, and idle used equipment
We also offer credit for buy-backs and trade-ins
www.artisantg.com/WeBuyEquipment ↗

LOOKING FOR MORE INFORMATION?
Visit us on the web at ***www.artisantg.com*** ↗ for more information on price quotations, drivers, technical specifications, manuals, and documentation

Contact us: (888) 88-SOURCE | sales@artisantg.com | www.artisantg.com