Datasheet

MCPN765

CompactPCI Peripheral Processor

MOTOROLA
intelligence everywhere™

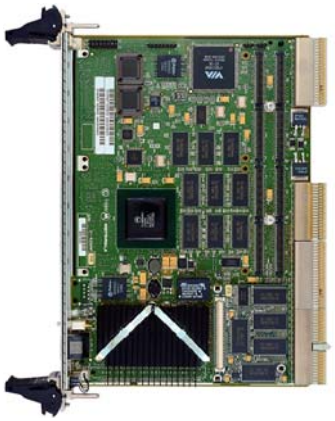

Maximum performance and flexibility ideal for high availability applications

The MCPN765 series of CompactPCI® boards provides competitive processors, Motorola's PowerPlus II Architecture, dual 10/100BaseTX Ethernet, two PCI mezzanine card (PMC) slots, and up to 1.5GB of ECC SDRAM. All this is available in a single CompactPCI slot.

Using the low-power, high-performance MPC7410 or MPC750 class processors, 64-bit local peripheral component interconnect (PCI) bus for the on-board peripherals and processor/memory bus to PCI bus bridge, the MCPN765 offers maximum performance and flexibility. It is also fully compliant to the PICMG® 2.1 Hot Swap Specification, making it the ideal choice for high availability applications.

- MPC7410 or MPC750 class processor
- 1MB or 2MB of L2 cache
- Up to 1.5GB ECC SDRAM, with optional RAM500 memory expansion modules
- Dual 10/100BaseTX Ethernet interface
- Two 32/64-bit PMC expansion slots with front-panel or backplane I/O
- 16MB on-board Flash memory for user-specified requirements
- Two 32-pin PLCC/CLCC sockets for Flash memory, up to 1MB capacity for on-board firmware or user-specified requirements
- Optional CompactFlash memory card socket on accompanying transition module
- On-board debug monitor with self-test diagnostics
- Two USB ports, four async serial ports
- 32KB NVRAM and time-of-day clock with replaceable battery backup
- Four 32-bit timers, one watchdog timer

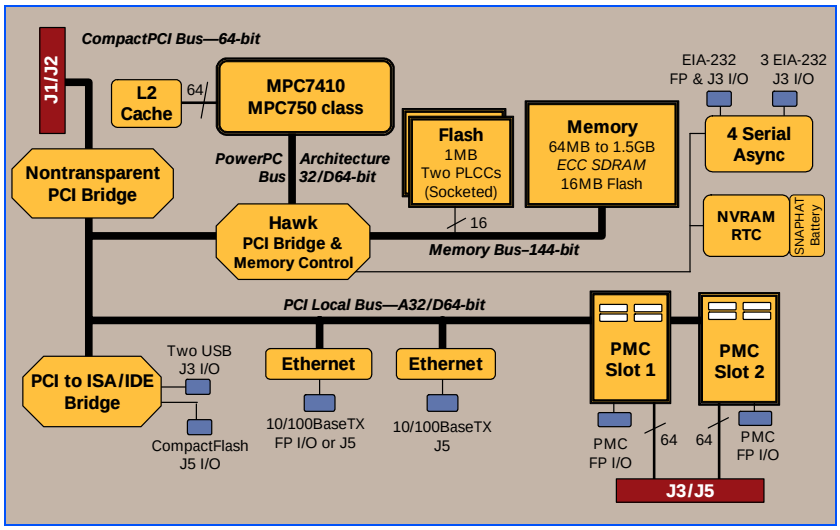

IEEE P1386.1 Compliant PMC Slots

The MCPN765 features dual PMC ports with support for both front-panel and backplane I/O. In addition to providing high-performance expansion I/O, the IEEE P1386.1 compliant PMC ports form a common architecture for future generations of products. Changing I/O requirements can be satisfied by simply replacing PMCs while reusing the same base platform and software, reducing the long-term cost of ownership.

PowerPlus II Architecture

A second-generation architecture, PowerPlus II Architecture, is a processor and bus architecture fully optimized to get the maximum performance from the PowerPC architecture-compatible microprocessor family, the PCI bus and the CompactPCI bus. Features added to the original PowerPlus Architecture include support for 100 MHz local bus operation and utilization of synchronous DRAM (SDRAM) technology. The outstanding performance of the PowerPlus II Architecture is not due to a single factor. A number of elements in the design of the PowerPlus II Architecture contribute to its outstanding performance including the processor/memory subsystem, high-speed local bus, optimally decoupled architecture, decoupling the processor from PCI and the advanced CompactPCI interface that reduces PCI delays.

TM-PIMC-0101

The TM-PIMC-0101 transition module provides industry-standard connector access to two RJ-45 Ethernet connectors, two RJ-45 async serial port connectors (configured as EIA DTE), two headers for async serial ports and two PIM slots for PMC interface modules. One socket for optional CompactFlash memory is also provided.

Firmware Monitor

Firmware must fulfill the traditional functions of test and initialization, in addition to operating system boot support. The MCPN765 firmware monitor exceeds these requirements plus expands features like power-up tests with extensive diagnostics, as well as a powerful evaluation and debug tool for simple checkout or when high-level development debuggers require additional support. All this is included with the MCPN765 firmware, plus it supports booting both operating systems and kernels.

Operating Systems and Kernels

MCPN765 supports booting a complete range of real-time operating systems and kernels, which may be purchased from the following companies:

Lynx Real-Time Systems, Inc.: LynxOS
Wind River Systems, Inc.: VxWorks

SPECIFICATIONS

Processor

Microprocessor:	450 or 500 MHz MPC750 class 500 MHz MPC7410
On-chip Cache (I/D):	32K/32K

Memory

ECC Protected Main Memory:	PC100 SDRAM with 100 MHz bus
Capacity:	64MB to 1.5GB
Single Cycle Accesses:	10 read/5 write
Read Burst Mode:	7-1-1-1 idle; 2-1-1-1 aligned page hit
Write Burst Mode:	4-1-1-1 idle; 2-1-1-1 aligned page hit
L2 Cache:	1MB (750) or 2MB (7410)
EEPROM/Flash:	On-board programmable
Capacity:	1MB via two 32-pin PLCC/CLCC sockets; 16MB surface mount
Read Access (8MB port):	70 clocks (32-byte burst)
Read Access (1MB port):	262 clocks (32-byte burst)
NVRAM:	32KB; 24KB available for users
Cell Capacity Life:	5 years at 100% duty cycle, 25° C
Removable Battery:	Yes

CompactPCI Interface

Controller:	Intel 2155*x*
Address/Data:	A32/D32/D64
PCI Bus Clock:	33 MHz
Signaling:	3.3V output; input defined by VIO

Dual Ethernet Interface

Controller:	Two Intel 21143
Interface Speed:	10/100Mb/s
PCI Local bus DMA:	Yes, with PCI burst
Connector:	One RJ-45 on front panel or J5/TM, one additional J5/TM only

Asynchronous Serial Ports

Controller:	16C550C UART
Number of Ports:	Four
Async Baud Rate, bps max.:	38.4K EIA-232
Connector (COM1):	Front panel; also RJ-45 on TM-PIMC-0101
Connector (COM2/3/4):	Routed to J3; one RJ-45, two headers on TM-PIMC-0101

Counters/Timers

TOD Clock Device:	M48T37V; 32KB NVRAM
Real-Time Timers/Counters:	Four 32-bit programmable
Watchdog Timer:	Time-out generates reset

USB

Controller:	82C586 or 82C686
Connectors:	Routed to J3 for use of two Series A receptacles on optional host interface module

IEEE P1386.1 PCI Mezzanine Card Slots

Address/Data:	A32/D32/D64, PMC JN1, JN2, JN3, JN4 connectors
PCI Bus Clock:	33 MHz
Signaling:	5V
Power:	+3.3V, +5V, ±12V, 7.5 watts maximum per PMC slot
Module Types:	Two single-wide or one double-wide, front panel I/O or J3 and J5 I/O; supports PrPMC module type PMCs

Note: Due to high component density, uninsulated traces and vias are located in the MCPN765 I/O keepout area. If installed, PMC modules having conductive I/O connectors could contact these traces and vias. If full IEEE 1386-2001 compliance is required, an insulating shield (for example, Kapton tape) should be installed.

Hot Swap

Compliant with PICMG Hot Swap Specification, Revision 1.0

Power Requirements

(maximum, not including PMC modules)

	+3.3V ± 5%	**+5V ± 5%**	**+12V ± 5%**	**–12V ± 5%**
MCPN765-2371	2.97 A	2.65 A	20 mA	<10 mA
MCPN765-7371	2.97 A	3.65 A	20 mA	<10 mA

Board Size

Height:	233.4 mm (9.2 in.)
Depth:	160.0 mm (6.3 in.)
Front Panel Height:	261.8 mm (10.3 in.)
Width:	19.8 mm (0.8 in.)
Max. Component Height:	14.8 mm (0.58 in.)

Miscellaneous

Reset/Abort switch (recessed on the MPC7410) on front panel; three LEDs for FAIL, CPU activity and hot swap

Demonstrated MTBF

(based on a sample of eight boards in accelerated stress environment)

Mean:	214,322 hours
95% Confidence:	121,141 hours

TM-PIMC-0101 Transition Module

I/O Connectors

Asynchronous Serial Ports: Two RJ-45 connectors labeled as COM1 and COM2; two 10-pin headers labeled as COM3 and COM4

Ethernet: Two RJ-45

PIM Card Slot

Power: +3.3V, +5V, +12V, –12V

Module Types: Two single-wide or one double-wide

Note: Jn0 PIM connectors incorporate other MCPN765 I/O for future host interface modules.

CompactFlash Memory Card Interface

Controller: 82C586

Interface: ATA, true IDE mode

CompactFlash Cards (optional): Motorola CFLASH-*xxx* series

Connector: One standard 50-pin socket

Board Size

Height: 233.4 mm (9.2 in.)

Depth: 80.0 mm (3.1 in.)

Front Panel Height: 261.8 mm (10.3 in.)

Width: 19.8 mm (0.8 in.)

All Modules

Environmental

	Operating	Nonoperating
Temperature:	0° C to +55° C, forced air cooling	–40° C to +85° C
Humidity (NC):	10% to 80%	10% to 90%
Vibration:	0.5 G RMS, 20–2000 Hz random	6.0 Gs RMS, 20–2000 Hz random

Safety

All printed wiring boards (PWBs) are manufactured with a flammability rating of 94V-0 by UL recognized manufacturers.

Electromagnetic Compatibility (EMC)

Intended for use in systems meeting the following regulations:

U.S.: FCC Part 15, Subpart B, Class A (non-residential)

Canada: ICES-003, Class A (non-residential)

This product was tested in a representative system to the following standards:

CE Mark per European EMC Directive 89/336/EEC with Amendments; Emissions: EN55022 Class B; Immunity: EN55024

ORDERING INFORMATION

Part Number	Description
MCPN765-2241	450 MHz MPC750 class, 64MB SDRAM, two rear Ethernet ports
MCPN765-2361	500 MHz MPC750 class, 256MB SDRAM, two Ethernet ports (one configurable, front or rear)
MCPN765-2362	500 MHz MPC750 class, 256MB SDRAM, two Ethernet ports (one configurable, front or rear), watchdog reset
MCPN765-2371	500MHz MPC750 class, 512MB SDRAM, two Ethernet ports (one configurable, front or rear)
MCPN765-3361	500 MHz MPC750 class, 256MB SDRAM, two Ethernet ports (one configurable, front or rear), configurable watchdog timer support
MCPN765-3371	500 MHz MPC750 class, 512MB SDRAM, two Ethernet ports (one configurable, front or rear), configurable watchdog timer support
MCPN765-7361	500 MHz MPC7410, 256MB SDRAM, two Ethernet ports (one configurable, front or rear)
MCPN765-7371	500 MHz MPC7410, 512MB SDRAM, two Ethernet ports (one configurable, front or rear)
MCPN765-8361	500 MHz MPC7410, 256MB SDRAM, two Ethernet ports (one configurable, front or rear), configurable watchdog timer support
MCPN765-8371	500 MHz MPC7410, 512MB SDRAM, two Ethernet ports (one configurable, front or rear), configurable watchdog timer support

Part Number	Description
ECC Memory Expansion Modules	
Note: Two modules maximum	
RAM500-004	64MB ECC DRAM (top)
RAM500-005	128MB ECC DRAM (top)
RAM500-015	128MB ECC DRAM (bottom)
RAM500-006	256MB ECC DRAM (top)
RAM500-016	256MB ECC DRAM (bottom)
RAM500-010	512MB ECC DRAM (top)
RAM500-020	512MB ECC DRAM (bottom)
Related Products	
TM-PIMC-0101	Two RJ-45 Ethernet connectors, two RJ-45 async serial port connectors, two headers for async serial ports, one CompactFlash socket, two PIM slots
CFLASH-*xxx*	CompactFlash memory card (where *xxx* = number of MB)
Documentation	
MCPN765A/IH	MCPN765 Installation and Use Manual
MCPN765A/PG	MCPN765 Programmer's Reference Guide
TMPIMCA/IH	TM-PIMC-0x01 Transition Module Installation and Use
PPCBUGA1/UM and PPCBUGA2/UM	PPCBug Firmware Package User's Manual
PPCDIAA/UM	PPCBug Diagnostics Manual
Documentation is available for online viewing and ordering at http://www.motorola.com/computer/literature	

Motorola Computer Group Regional Offices

NORTH AMERICA: Tempe, AZ 1 800 759 1107 or +1 602 438 5720

EUROPE: Loughborough, UK +44 1509 634300

EAST MEDITERRANEAN: Tel Aviv, Israel +972 3 568 4388

ASIA: Shanghai, China +86 21 5292 5693

PACIFIC RIM: Tokyo, Japan +81 3 5424 3101

ASIA/PACIFIC: Hong Kong +852 2966 3210

MOTOROLA

www.motorola.com/computer

MOTOROLA and the Stylized M Logo are registered in the U.S. Patent and Trademark Office. CompactPCI and PICMG are registered trademarks of PCI Industrial Computer Manufacturers Group. All other product or service names are the property of their respective owners.

This datasheet identifies products, their specifications, and their characteristics, which may be suitable for certain applications. It does not constitute an offer to sell or a commitment of present or future availability, and should not be relied upon to state the terms and conditions, including warranties and disclaimers thereof, on which Motorola may sell products. A prospective buyer should exercise its own independent judgement to confirm the suitability of the products for particular applications. Motorola reserves the right to make changes, without notice, to any products or information herein which will, in its sole discretion, improve reliability, function, or design. Motorola does not assume any liability arising out of the application or use of any product or circuit described herein; neither does it convey any license under its patent or other intellectual property rights or under others. This disclaimer extends to any prospective buyer, and it includes Motorola's licensee, licensee's transferees, and licensee's customers and users. Availability of some of the products and services described herein may be restricted in some locations.

CN765-D7 05/03

© 2003, 2002, 2001, 1999 Motorola, Inc. All rights reserved.