Adept Technology 550 Table Top SCARA Robot

Limited Availability
Used and in Excellent Condition

Open Web Page

https://www.artisantg.com/79886-1

ARTISAN TECHNOLOGY GROUP

Your **definitive** source for quality pre-owned equipment.

Artisan Technology Group
(217) 352-9330 | sales@artisantg.com | artisantg.com

All trademarks, brandnames, and brands appearing herein are the property of their respective owners.

- Critical and expedited services
- In stock / Ready-to-ship
- We buy your excess, underutilized, and idle equipment
- Full-service, independent repair center

Artisan Scientific Corporation dba Artisan Technology Group is not an affiliate, representative, or authorized distributor for any manufacturer listed herein.

Adept 550 Robot

Instruction Handbook

Including Adept 550 CleanRoom Robot

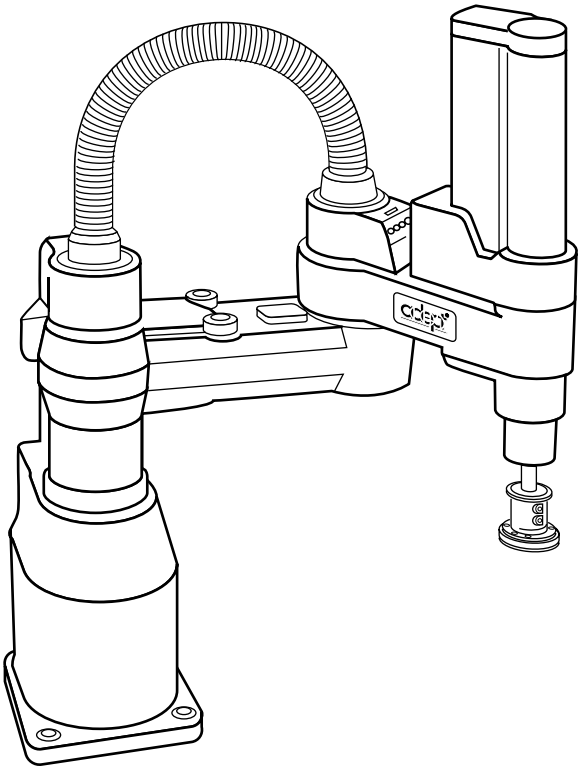

Artisan Technology Group - Quality Instrumentation ... Guaranteed | (888) 88-SOURCE | www.artisantg.com

Artisan Technology Group - Quality Instrumentation ... Guaranteed | (888) 88-SOURCE | www.artisantg.com

Adept 550 Robot

Instruction Handbook

Including Adept 550 CleanRoom Robot

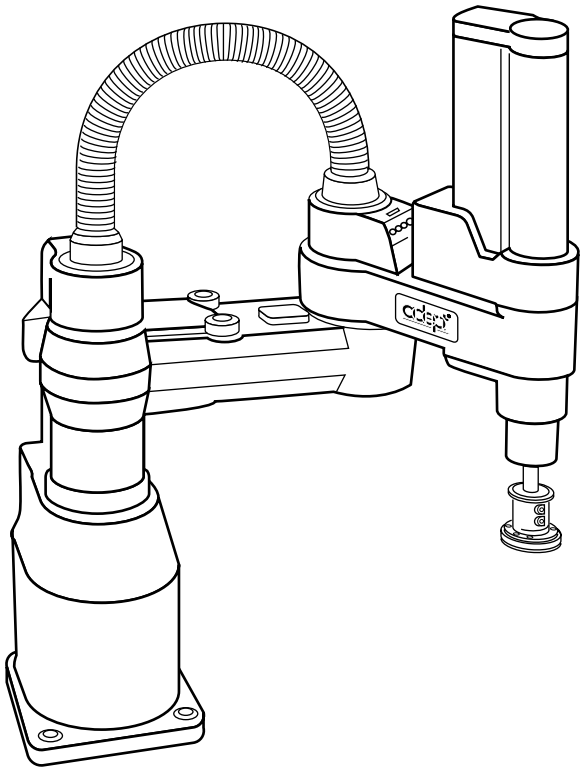

00556-00100, Rev A
February, 1996

adept technology, inc.

150 Rose Orchard Way • San Jose, CA 95134 • USA • Phone (408) 432-0888 • Fax (408) 432-8707
Otto-Hahn-Strasse 23 • 44227 Dortmund • Germany • Phone 0231/75 89 40 • Fax 0231/75 89 450
11, Voie la Cardon • 91126 • Palaiseau • France • Phone (1) 69.19.16.16 • Fax (1) 69.32.04.62
Via don Luigi Sturzo 39/41 • 52100 Arezzo • Italy • Phone 575.3986 11 • Fax 575.3986 20
1-2, Aza Nakahara Mitsuya-Cho • Toyohashi, Aichi-Ken • 441-31 • Japan • (0532) 65-2391 • Fax (0532) 65-2390

Artisan Technology Group - Quality Instrumentation ... Guaranteed | (888) 88-SOURCE | www.artisantg.com

The information contained herein is the property of Adept Technology, Inc., and shall not be reproduced in whole or in part without prior written approval of Adept Technology, Inc. The information herein is subject to change without notice and should not be construed as a commitment by Adept Technology, Inc. This manual is periodically reviewed and revised.

Adept Technology, Inc., assumes no responsibility for any errors or omissions in this document. Critical evaluation of this manual by the user is welcomed. Your comments assist us in preparation of future documentation. A form is provided at the back of the book for submitting your comments.

Copyright © 1996 by Adept Technology, Inc. All rights reserved.

The Adept logo is a registered trademark of Adept Technology, Inc.

Adept, AdeptOne, AdeptOne-MV, AdeptThree, AdeptThree-MV, PackOne, PackOne-MV, HyperDrive, Adept 550, Adept 550 CleanRoom, Adept 1850, Adept 1850XP, A-Series, S-Series, Adept MC, Adept CC, Adept IC, Adept OC, Adept MV, AdeptVision, AIM, VisionWare, AdeptMotion, MotionWare, PalletWare, AdeptNet, AdeptFTP, AdeptNFS, AdeptTCP/IP, AdeptForce, AdeptModules, and V^+ are trademarks of Adept Technology, Inc.

Any trademarks from other companies used in this publication are the property of those respective companies.

Printed in the United States of America

Artisan Technology Group - Quality Instrumentation ... Guaranteed | (888) 88-SOURCE | www.artisantg.com

MANUFACTURER'S DECLARATION

We, **Adept Technology**, with Corporate Headquarters at 150 Rose Orchard Way, San Jose, CA., USA, and European Technical Center at Otto-Hahn-Str. 23, 44227 Dortmund, Germany, herewith declare that the Robot comprised of:

1. **Controller: MV-8 (P/N 30330-15000), MV-19 (P/N 30330-25000)**
   MV-5 (P/N 30340-10000), or MV 10 (P/N 30340-20000)
2. **PA-4 Power Chassis (P/N 30336-31000)**
3. **B+ Power Amplifiers (P/N 10338-51000)**
4. **Manual Control Pendant (MCP III) (P/N 90332-48050)**
5. **VME Front Panel Category 1 (P/N 90332-00380)**
6. **550A Mechanism (Model Number 556 for standard, Model Number 557 for cleanroom) covered under a Declaration of Incorperation**

in the form delivered by us to which this Declaration relates, complies with the relevant and fundamental safety and health requirements defined in the EC Directive 89/336/EEC, Appendix 1, and the following standards:

EN 55011:1991, Class A
EN 50082-2: 1992
EN 292: 1992
EN 60204-1: 1992, IP20
EN 954, Category 1
EN 775; 1992

following the provision of Directives:

89/336/EEC
89/392/EEC
73/23/EEC

under the following usage and environmental conditions:

1. The Robot must not be put into operation until all of the machinery into which it is incorporated has been declared in compliance with the provisions of the effective versions of the Directives. This includes all supplementary equipment and protective devices.

2. The system must be used in accordance with instructions specified in Adept Instruction Handbook for Category 1 Operation per EN 954.

3. The Robot must incorporate only those MV Plug-in Modules listed in Table 1 or Table 2. If Plug-in Modules listed in Table 2 are installed, the user must verify conformance to the EMC Directive after installation.

This Declaration is based upon extensive tests and evaluation by **TÜV Rheinland**, a Notified Body, in their Project Number **E9572254**. The complete File is available at the California address.

Place: San Jose, California, USA

Date: 1 February 1996

Signed: R. J. Casler

Full Name: Richard J. Casler, Jr.

Position: Vice President, Engineering

P/N 01554-00000
Rev. P1

Artisan Technology Group - Quality Instrumentation ... Guaranteed | (888) 88-SOURCE | www.artisantg.com

English

Manufacturer's Declaration
as defined in Machinery Directive 89/392EEC, Appendix IIB

We herewith declare that the machine as delivered by us complies with the relevant and fundamental safety and health requirements defined in the EC Directive, Appendix 1.
The machine must not be put into operation until all of the machinery into which it is incorporated has been declared in compliance with the provisions of the effective versions of the directives. This includes all supplementary equipment and protective devices.

Deutsch

Herstellererklärung
im Sinne der EG-Maschinenrichtlinie 89-392/EWG, Anhang II B

Hiermit erklären wir, daß die nachstehende Maschine in der von uns gelieferten Ausführung, den einschlägigen, grundlegenden Sicherheits- und Gesundheitsanforderungen der EG-Richlinie Anhang I, entspricht.
Wir weisen daraufhin, daß die Inbetriebnahme der Maschine solange untersagt ist, bis festgestellt ist, daß die Maschine, in die diese Maschine eingebaut werden soll, den Bestimmungen der Richtlinie in der jeweils gueltigen Fassung entspricht. Dies schließt die anwenderseitig in die Maschine zu installierenden Ergänzungen und Schutzeinrichtungen ein.

Française

Déclaration du Constructeur
selon la Directive Communautaire relative aux machines
89/392/CEE, Annexe II B.

Par la présente, nous déclarons que la machine décrite ci-dessous, livrée en l'état, est conforme à la directive communautaire, Annexe I, sur les impératifs fondamentaux en matière de santé et de sécurité.
La machine ne pourra être mise en service avant que la machine dans laquelle elle sera incorporée ne soit déclarée complètement conforme aux dispositions des directives en cours de validité. Ceci comprend tout équipement complémentaire et dispositif de protection.

Italiano

Dichiarazione del Costruttore
ai sensi della direttiva CE 89/392/EEC relativa a macchinari Appendice IIB

Si dichiara che la macchina , come da noi fornita, soddisfa i requisiti fondamentali definiti nella direttiva CE, Appendice I,in fatto di sicurezza e sanità.
La messa in funzione della macchina resta vietata fintanto che l'intero sistema nel quale questa è incorporata sia stato dichiarato conforme alla versione vigente della suddetta normativa. Il sistemasi intende comprensivo di tutte le parti accessorie e dispositivi di sicurezza.

P/N 01554-00000
Rev. P1

Artisan Technology Group - Quality Instrumentation ... Guaranteed | (888) 88-SOURCE | www.artisantg.com

Table 1

VME Plug-in Modules that meet all applicable Directives and that may be installed, without additional EMC conformance testing, in MV-8 and MV-19 Controllers

Part Number	Minimum Acceptable Revision	Description
10332-11150	P6	PCA, VME 030 Processor
10332-00710	P1	PCA, VME 040 Processor
30332-12350	P2	SYSIO 2 Module Assy FD/HD (SIO2)
30332-12351	P2	SYSIO 2 Module Assy FD
10332-00800	P2	PCA, VME Digital I/O (DIO)
10332-10250	P3	PCA, VME Graphics Board (VGBIII)
10332-00600	P2	PCA VME Frame Grabber (VIS)
10332-11400	P4	PCA, VME Motion Interface, MI-3
10332-12400	P2	PCA, VME Motion Interface, MI-6
10332-00500	P2	PCA, VME Joint Interface (VJI III)

Table 2

Plug-in Modules and Accessories that may be installed in MV-8 and MV-19 Controllers but must first be tested in the final system configuration to assume full compliance.

Part Number	Minimum Acceptable Revision	Description
90332-02020	P1	AdeptNet 10BaseT Kit
10330-00970	B	PCA, VME Analog I/O (AIO)
90211-00000	B	Adept Force Kit

Artisan Technology Group - Quality Instrumentation ... Guaranteed | (888) 88-SOURCE | www.artisantg.com

Artisan Technology Group - Quality Instrumentation ... Guaranteed | (888) 88-SOURCE | www.artisantg.com

Table of Contents

1 Safety 1

1.1 Introduction 2
Adept Equipment Compatibility 3
Definition of a Manipulating Industrial Robot 3
1.2 Notes, Cautions, and Warnings 4
1.3 Risk Assessment – Category 1 System 4
1.4 Precautions and Required Safeguards 5
Robot Static Forces 5
Safety Barriers 5
Impact and Trapping Points 6
Hazards from Expelling a Part or Attached Tooling 6
Additional Safety Information 7
1.5 Intended Use of the Robots 7
1.6 Robot Modifications 8
Acceptable Modifications 8
Unacceptable Modifications 9
1.7 Endangerment Through Additional Equipment 9
1.8 Working Areas 9
1.9 Qualification of Personnel 10
1.10 Transport 10
1.11 Safety Equipment for Operators 11
1.12 Protection Against Unauthorized Operation 11
1.13 Operating Modes of Adept Robots 11
Automatic Mode 11
Manual Mode 11
1.14 Safety Aspects While Performing Maintenance 12
1.15 Risks That Cannot Be Avoided 12
1.16 What to Do in an Emergency Situation 12
1.17 How to Get Help 13
In Europe 13
Europe/Germany 13
France 13
Italy 13
In the United States 13
Service Calls 13
Application Questions 13
Applications Internet E-Mail Address 13
Training Information 13
Outside Continental United States or Europe 14

Artisan Technology Group - Quality Instrumentation ... Guaranteed | (888) 88-SOURCE | www.artisantg.com

2 Installation 15

2.1 Environmental and Facility Requirements for Robot. 17
Facility Ambient Air Quality For Robots 17
Robot Workcell Free Space 17
2.2 Environmental and Facility Requirements for Controller 17
2.3 Environmental and Facility Requirements Power Chassis 18
2.4 Before Unpacking Adept Equipment 18
2.5 Adept Shipment Specifications. 18
2.6 Transport and Storage 18
2.7 Unpacking and Inspecting the Adept Equipment 19
2.8 Repackaging For Relocation. 19
2.9 Robot Installation. 20
Mounting Surface 20
Tool and Equipment Requirements. 20
Mounting Procedure 20
2.10 Installation of the Adept MV Controller and the Adept PA-4 Power Chassis 22
Joining an Adept PA-4 Power Chassis to an Adept MV Controller 22
Joining at the Top 23
Joining at the Bottom. 23
Space Around the Chassis. 24
Installation in a Rack or Panel Mount 24
Panel Mounting 24
Rack Mounting 24
2.11 Installing the A-Series Monitor and Keyboard 27
Installation Procedure. 27
2.12 Installing a Terminal in an S-Series System 28
Recommended Terminal for S-Series Systems 28
Installation Procedure. 28
2.13 Installing the External Front Panel 29
Controls and Indicators 29
Installing the External Front Panel (VFP) 30
2.14 Signal Interconnection Installation 31
System Cable Connections 31
Connecting the Robot to the Power Chassis 32
Installing Signal Cables: Robot to MV Controller. 33
Installing Signal Cables: MV Controller to Power Chassis. 34
Connecting the MCP to the VFP. 35
MCP Cradle. 35
2.15 Grounding Information. 36
Adept MV Controller Grounding. 36
Adept PA-4 Power Chassis Grounding 36
Adept Robot Grounding 36
Robot-Mounted Equipment Grounding. 36
2.16 Connecting to AC Power. 37
Connecting AC Power to the MV Controller. 37

Artisan Technology Group - Quality Instrumentation ... Guaranteed | (888) 88-SOURCE | www.artisantg.com

AC Power Requirements 37
Power Entry Module 37
Connecting AC Power Cord 38
Connecting AC Power to the Adept PA-4 Power Chassis 39
AC Power Requirements for Power Chassis 39
Connecting the Power Chassis AC Power Cord 40
Typical AC Power Installation Diagrams 41
Changing Voltage Setting for Power Chassis 42
2.17 Additional Power Chassis Information 44
Overview of B+ Amplifier Module 44
Connectors and Indicators 44
Circuit Breaker and Fuse Information 45
Chassis Circuit Breaker 45
Chassis Fuses 45
Amplifier Module Fuses 45
Removing and Installing Amplifier Modules 45
Removing Amplifier Modules 45
Installing Amplifier Modules 46
2.18 Installing End-Effectors on an Adept 550 Robot 46
2.19 Removing and Installing the User Flange 47
Removing the Flange 47
Installing the Flange 47
2.20 User Connections on Robot 48
User Air Lines 48
User Electrical Lines 48

3 Preparation for Safe and Effective Use of the Robot 49

3.1 Overview of Safety System 50
Introduction 50
Operating in Manual Mode 50
User-Supplied E-Stop Switches 50
Terminal Block On External Front Panel 51
External E-Stop Input 52
Passive E-Stop Output 52
Digital Inputs and Outputs of the System Input/Output (SIO) Module 53
Input Signals 53
Output Signals 54
Digital I/O Connector Pinouts 55
Typical Emergency Stop Circuitry 57

4 Commissioning the System 59

4.1 Introduction 60
4.2 Check Of Physical Connections 60
Physical Connections 60
4.3 VFP Operating Modes 60

Artisan Technology Group - Quality Instrumentation ... Guaranteed | (888) 88-SOURCE | www.artisantg.com

Manual Operating Mode 60
Automatic Operating Mode 61
4.4 Using the Brake Release Button 62
Brakes 62
Brake Release Button 62
4.5 Description of the Manual Control Pendant (MCP) 63
How to Hold the MCP 63
Description of Buttons on the MCP 64
Mode Control and Joint/Axis Control Buttons 64
Speed Bars 64
4.6 How to Stop a Robot in Manual Mode 65
4.7 How to Start the Robot 65
Enable High Power with the MCP 65
In Automatic Mode 65
In Manual Mode 66
Calibration of the Robot with the MCP 66
4.8 Moving the Robot with the MCP 67
MAN/HALT Button for Selecting Joint State 68
Joint/Axis Control Buttons 68
Speed Bars 68
Selecting Joint State and Moving the Robot 69
Selecting and Moving Joint 1 70
Selecting and Moving Joint 2 70
Selecting and Moving Joint 3 70
Selecting and Moving Joint 4 70
4.9 Limiting Joint Travel 71
Softstops 71
Hardstops 71

5 Maintenance 73

5.1 Introduction 74
5.2 Checking Robot Mounting Bolts and Leveling 74
5.3 Lubricate Joint 3 Ball Screw 75
5.4 Check Tension and Wear On J3 and J4 Drive Belts 76
5.5 Maintenance and Inspection of Air Filters 79
Adept PA-4 Fan Filter Inspection and Cleaning 79
Adept MV Controller Fan Filter Inspection and Cleaning 79
5.6 Check Lamps on VFP 79

6 Technical Specification 81

6.1 Dimensions 82
Dimensions for Adept 550 Robot 82
User Flange Dimensions for Adept 550 Robot 83
Dimensions for Adept MV-8 Controller 85
Dimensions for Adept MV-19 Controller 86

Artisan Technology Group - Quality Instrumentation ... Guaranteed | (888) 88-SOURCE | www.artisantg.com

Dimensions for Adept PA-4 Power Chassis 87
Dimensions of the External Front Panel. 88
Dimensions of the Mounting Brackets 89
MCP Cradle Dimensions. 90
6.2 Joint Motions 91
Joint 1 91
Joint 2 91
Joint 3 92
Joint 4 92
6.3 Adept 550 Robot Specifications 93
Adept 550 Robot Working Envelope 95
6.4 Adept PA-4 Power Chassis Specifications 96

A Adept 550 CleanRoom Robot 97

A.1 Introduction. 98
Vacuum Specifications 98
A.2 Installation 98
A.3 Adept 550 CleanRoom Robot Dimensions 99

B Dual Adept 550 Robots. 101

B.1 Introduction 102
Dual Adept 550 Robot System Description 102
B.2 Installation 102
VMEbus Address for VJI Module 102
Adept PA-4 Power Chassis. 102
Cable Installation 103
B.3 Operation with the Manual Control Pendant (MCP) 103
B.4 Programming Information 103
V+ Language Programming 103
V+ Monitor Commands 103
B.5 Emergency Stop Circuit Shuts Off Both Robots 104

C EMC Test Information 105

C.1 Electromagnetic Compatibility Testing Results. 105

Artisan Technology Group - Quality Instrumentation ... Guaranteed | (888) 88-SOURCE | www.artisantg.com

List of Figures

Figure 1-1 Adept 550 Robot with Joint Locations 2
Figure 1-2 Adept MV-8 Controller and PA-4 Power Chassis 2
Figure 1-3 Robot Impact and Trapping Point Hazards 6
Figure 2-1 Adept 550 Robot on a Transportation Pallet 19
Figure 2-2 Mounting Hole Pattern (Robot-to-Mounting Surface) 20
Figure 2-3 Joining the Power Chassis and Controller at the Top 22
Figure 2-4 Joining the Power Chassis and Controller at the Bottom 23
Figure 2-5 Installing Mounting Brackets on an Adept MV Controller 25
Figure 2-6 Installing Mounting Brackets on an Adept PA-4 Power Chassis 26
Figure 2-7 Connecting the A-Series Monitor and Keyboard 27
Figure 2-8 External Front Panel (VFP) 29
Figure 2-9 External VME Front Panel Installation 30
Figure 2-10 Adept 550 Robot System Cable Installation 31
Figure 2-11 Adept 550 Robot Rear Panel 32
Figure 2-12 Robot-to-VJI Cable Installation 33
Figure 2-13 Power Chassis to VJI Cable Installation 34
Figure 2-14 MCP Connection 35
Figure 2-15 Adept MV Controller Power Entry Module 38
Figure 2-16 Typical 380-415 V AC Connection for Category 1 System 41
Figure 2-17 Typical 3-Phase 200-240 V AC Connection for Category 1 System 41
Figure 2-18 Insulating Blue Wire in Power Cord 42
Figure 2-19 Changing Voltage in Power Chassis 43
Figure 2-20 User Flange Removal Details 47
Figure 3-1 Digital I/O Connector Pin Locations on SIO Module 56
Figure 3-2 E-Stop Diagram with VFP and MCP 57
Figure 3-3 E-Stop Circuitry with Additional Safety Equipment 58
Figure 4-1 Holding the MCP 63
Figure 4-2 MCP Layout 64
Figure 4-3 Command (CMD) Function Button 67
Figure 4-4 Mode Control Buttons 68
Figure 4-5 Speed Bars 68
Figure 4-6 Joint State (SCARA) 69
Figure 5-1 Lubrication of Joint 3 Ball Screw 75
Figure 5-2 Location of Access Cover on Underside of Outer Link 76
Figure 5-3 Location of Joint 3 and Joint 4 Drive Belts 77
Figure 5-4 Close-up View of Joint 3 Brake Assembly 78
Figure 6-1 Adept 550 Robot Top and Side Dimensions 82
Figure 6-2 User Flange Dimensions for Adept 550 Robot 83

Artisan Technology Group - Quality Instrumentation ... Guaranteed | (888) 88-SOURCE | www.artisantg.com

Figure 6-3 User Flange Close-up Dimensions. 84
Figure 6-4 Adept MV-8 Dimensions 85
Figure 6-5 Adept MV-19 Dimensions 86
Figure 6-6 Adept PA-4 Power Chassis Dimensions 87
Figure 6-7 Adept External Front Panel Dimensions. 88
Figure 6-8 Adept MV-8 and PA-4 With Mounting Brackets Installed 89
Figure 6-9 MCP Cradle Dimensions 90
Figure 6-10 Joint-1 Motion. 91
Figure 6-11 Joint-2 Motion and LEFTY/RIGHTY Configurations 91
Figure 6-12 Joint-3 and Joint-4 Motions. 92
Figure 6-13 Adept 550 Robot Working Envelope 95
Figure A-1 Adept 550 CleanRoom Robot Top and Side Dimensions 99

Artisan Technology Group - Quality Instrumentation ... Guaranteed | (888) 88-SOURCE | www.artisantg.com

List of Tables

Table 1-1 Adept Hardware and Software Compatibility for Category 1 Systems 3
Table 1-2 Robot Torques and Forces 5
Table 1-3 Maximum Robot Joint Velocities in Runaway Situations 6
Table 1-4 Sources for International Standards and Directives 7
Table 2-1 Operating Environment Specifications for Adept Robots 17
Table 2-2 Operating Environment Requirements 17
Table 2-3 Adept Shipping Crate Specifications 18
Table 2-4 Mounting Bolt Specifications 21
Table 2-5 Adept MV Controller Power Requirements 37
Table 2-6 Adept MV Controller Power Cord Specifications 38
Table 2-7 Adept PA-4 Power Chassis Power Requirements 39
Table 2-8 AC Power Cord Specifications for Power Chassis 40
Table 3-1 Terminal Assignment of the Terminal Block on the Back of the VFP 51
Table 3-2 DIO Input Specifications (SIO module) on the Security Panel 53
Table 3-3 DIO Output Specifications (SIO module) 54
Table 3-4 Digital I/O Connector Pin Assignments on SIO Module 55
Table 4-1 Softstop and Hardstop Specifications 71
Table 5-1 Inspection and Maintenance 74
Table 6-1 Adept 550 Robot Specifications 93
Table 6-2 Power Consumption for PA-4 Power Chassis with an Adept 550 System . . . 96
Table A-1 Adept 550 CleanRoom Robot Vacuum Specifications 98
Table B-1 Typical Robot-VJI-Amplifier Assignments in Dual Adept 550 Robot System 103
Table C-1 EMC Test Results 105

Artisan Technology Group - Quality Instrumentation ... Guaranteed | (888) 88-SOURCE | www.artisantg.com

Safety 1

1.1 Introduction 2

Adept Equipment Compatibility 3

Definition of a Manipulating Industrial Robot 3

1.2 Notes, Cautions, and Warnings 4

1.3 Risk Assessment – Category 1 System 4

1.4 Precautions and Required Safeguards 5

Robot Static Forces 5

Safety Barriers 5

Additional Safety Information. 7

1.5 Intended Use of the Robots 7

1.6 Robot Modifications 8

Acceptable Modifications 8

Unacceptable Modifications 9

1.7 Endangerment Through Additional Equipment 9

1.8 Working Areas 9

1.9 Qualification of Personnel 10

1.10 Transport. 10

1.11 Safety Equipment for Operators. 11

1.12 Protection Against Unauthorized Operation. 11

1.13 Operating Modes of Adept Robots 11

Automatic Mode 11

Manual Mode. 11

1.14 Safety Aspects While Performing Maintenance. 12

1.15 Risks That Cannot Be Avoided 12

1.16 What to Do in an Emergency Situation 12

1.17 How to Get Help 13

In Europe 13

In the United States 13

Outside Continental United States or Europe. 14

Artisan Technology Group - Quality Instrumentation ... Guaranteed | (888) 88-SOURCE | www.artisantg.com

1.1 Introduction

The Adept 550 robot is a four-axis SCARA (Selective Compliance Assembly Robot Arm) robot. Joints 1, 2, and 4 are rotational and Joint 3 is translational. See Figure 1-1 for a description of the robot joint locations.

The Adept 550 robot is designed to interface with the Adept MV controller and PA-4 power chassis (see Figure 1-2). The control and operation of the robot is programmed and performed through the controller.

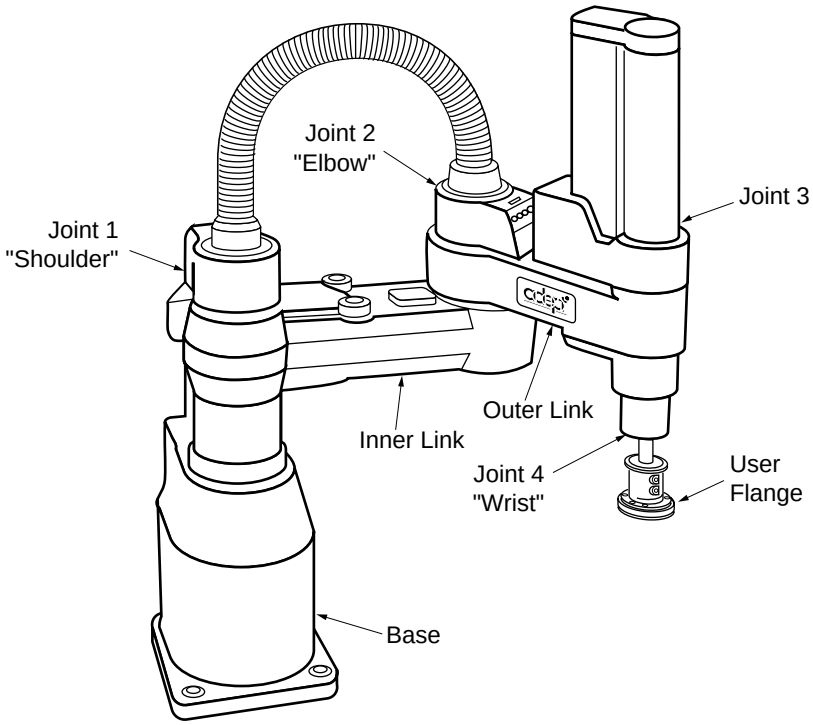

Figure 1-1. Adept 550 Robot with Joint Locations

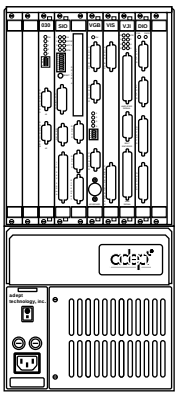

Adept MV-8 Controller

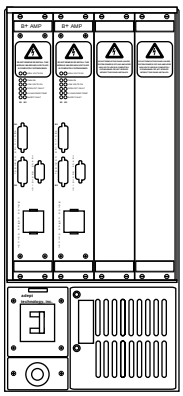

Adept PA-4 Power Chassis

Figure 1-2. Adept MV-8 Controller and PA-4 Power Chassis

Artisan Technology Group - Quality Instrumentation ... Guaranteed | (888) 88-SOURCE | www.artisantg.com

Adept Equipment Compatibility

The Adept 550 Category 1 robot system must consist of the hardware and software listed in the following table. All new systems shipped from the factory will include the correct equipment as shown. If you have existing Adept equipment, this table can help distinguish new equipment from older equipment, especially since some of it is visibly similar. See the product data label for the robot, controller, and power chassis for model number or part number information.

For information on the V^+ 11.3 Operating System, refer to the *V^+ 11.3 Release Notes* that is shipped with each system.

Table 1-1. Adept Hardware and Software Compatibility for Category 1 Systems

Product	Required Model, Part, or Version Number
Standard Adept 550 robot CleanRoom Adept 550 robot	550A Mechanism, Model Number 556 550A Mechanism, Model Number 557
Adept MV-8 controller Adept MV-19 controller	part number 30330-15000 part number 30330-25000
Adept PA-4 power chassis	part number 30336-31000
B+ amplifier module	part number 10338-51000
External VME Front Panel (VFP)	Category 1, part number 90332-00380[a]
Manual Control Pendant	MCP III, part number 90332-48050[b]
V^+ Operating System software	Version 11.3 or later Note: Category 1 hardware cannot be used with earlier versions of V^+

[a] The new Category 1 VFP has two keyswitches, older versions have only one.
[b] The label on the back of the new MCP III is “Manual Control III Operator.” Also on the new MCP, the button in the lower right corner (below T1) is labeled STEP.

Definition of a Manipulating Industrial Robot

An automatically controlled, reprogrammable, multi-purpose, manipulative machine with several degrees of freedom, which may be either fixed in a place or mobile for use in industrial automation applications is called a manipulating robot. (ISO 10218:1992(E))

Artisan Technology Group - Quality Instrumentation ... Guaranteed | (888) 88-SOURCE | www.artisantg.com

1.2 Notes, Cautions, and Warnings

There are four levels of special notation used in this instruction handbook. In descending order of importance, they are:

WARNING: If the actions indicated in a “WARNING” are not complied with, injury or major equipment damage could result. A Warning statement will typically describe the potential hazard, its possible effect, and the measures that must be taken to reduce the hazard.

WARNING: If in a “WARNING” the actions are indicated with a lightning bolt instead of an exclamation mark, an electrical danger or shock is possible for personnel working with the system.

CAUTION: If the action specified in the “CAUTION” is not complied with, damage to your equipment could result.

NOTE: A “NOTE” provides supplementary information, emphasizes a point or procedure, or gives a tip for easier operation.

1.3 Risk Assessment – Category 1 System

Provided that instructed personnel who enter Adept 550 robot work envelope are wearing protective headgear, eyeglasses, and safety shoes, it is highly unlikely that the Adept 550 Robot could cause permanent injury. Further, due to its small size, light payload capacity, and limited reach, it is highly likely that such personnel could avoid being hit by the robot even in a high-acceleration, runaway, failure condition.

In consideration of these factors, prEN1050 specifies use of a Category 1 Control System per EN954. EN954 defines a Category 1 Control System as one that employs Category B components designed to withstand environmental influences (such as voltage, current, temperature, EMI) and that employs well-tried safety principles. The Adept 550 control system (Control System) described in this Handbook employs hardware components in its safety system that meet or exceed the requirements of the Machinery and Low Voltage Directives.

Further, the control system is fully hardened to all EMI influences per the EMC Directive (See Appendix C) and meets all functional requirements of ISO10218 – Manipulating Robots Safely. In addition, a “soft” servo mode has been incorporated to limit impact forces on the Operator and production tooling when the robot is operated in Manual Mode.

In consideration of the above, the Adept 550 Control System meets or exceeds the requirements imposed by the EN954-specified Category 1 level of safety, as evidenced by the Manufacturer’s Declaration at the front of this Handbook.

Artisan Technology Group - Quality Instrumentation ... Guaranteed | (888) 88-SOURCE | www.artisantg.com

1.4 Precautions and Required Safeguards

This manual must be read by all personnel who install, operate, or maintain Adept systems, or who work within or near the workcell.

WARNING: Adept Technology strictly prohibits installation, commissioning, or operation of an installation with an Adept robot without the adequate safeguards according to the standards ISO 10218, sections 5,6; EN292-1, and EN60204, section 13.

Robot Static Forces

Adept robot systems include computer-controlled mechanisms that are capable of exerting considerable force. Like all robot and motion systems, and most industrial equipment, they must be treated with respect by the user and the operator.

The following table shows the forces that can be generated by an Adept 550 robot.

Table 1-2. Robot Torques and Forces

Joint 1 maximum static torque	160 Nm (118 ft-lb)
Joint 2 maximum static torque	79 Nm (58 ft-lb)
Maximum static force applied by the robot in XY plane, measured at user flange	608 N (137 lb)

Safety Barriers

Safety barriers must be an integral part of robot workcell design, installation, Operator training, and operating procedures. Adept systems are computer-controlled, and may activate remote devices under program control at times or along paths not anticipated by personnel. It is critical that safeguards be in place to prevent personnel from entering the workcell whenever equipment power is present.

The Adept 550 robot is not safe on its own. The Robot System Integrator (or end-user) must ensure that adequate safeguards, safety barriers, light curtains, safety gates, safety floor mats, etc. will be installed. The robot workcell must be designed according to ISO 10218, sections 5,6; EN292-1, 3.71, and EN60204, section 13.

The safety distance to the robot depends, relating to the standard EN 294, on the height of the safety fence. The height and the distance of the safety fence must ensure that nobody can reach the danger zone of the robot, see EN 294.

Adept controller systems for the Adept 550 robot are Category 1 systems that have various control features which can aid the integrator or user in constructing system safeguards, including Customer Emergency stop circuitry and digital input and output lines. The emergency power-off circuitry is capable of switching external power systems, as well as detecting intrusion signals from safety barriers. See Chapter 3 for information on safe and effective use of the robot.

Artisan Technology Group - Quality Instrumentation ... Guaranteed | (888) 88-SOURCE | www.artisantg.com

Impact and Trapping Points

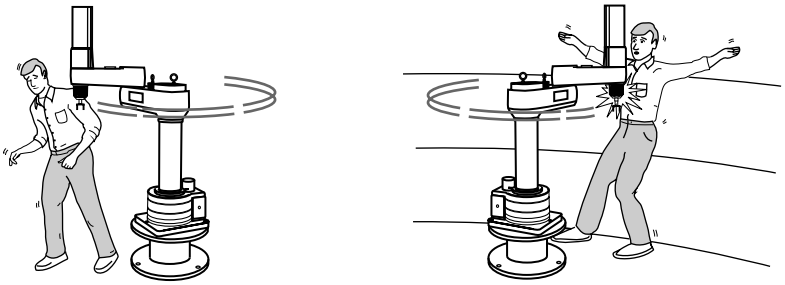

Figure 1-3. Robot Impact and Trapping Point Hazards

Adept robots are capable of moving at high speeds. If a person is struck by a robot (impacted) or trapped (pinched), serious injury could occur. Robot configuration, joint speed, joint orientation, and attached payload all contribute to the total amount of energy available to cause injury.

Hazards from Expelling a Part or Attached Tooling

The maximum joint and user flange tip speeds that can be obtained on the Adept 550 robot in a *runaway* situation are listed in Table 1-3. Any tooling, fixtures, end-effectors, etc., mounted to the user flange, outer link, or inner link of the robot must be attached by sufficient means to resist being expelled from the robot. Additionally, any payload must be attached to the end-effector to resist being expelled from the robot.

Table 1-3. Maximum Robot Joint Velocities in Runaway Situations[a]

Joint 1 maximum angular velocity	660 degrees / second
Joint 1 maximum linear velocity	4.2 meters / second
Joint 2 maximum angular velocity	1375 degrees / second
Joint 2 maximum linear velocity (measured at user flange)	12.3 meters / second

[a] These velocities can only occur in a runaway or mechanical failure situation. These are *not* performance specifications; see Chapter 6 for robot performance specifications.

The safety fence or barrier constructed around the robot must be designed to withstand the impact of any item expelled accidentally from the robot. Projectile energy can be calculated using the formula $E = 1/2mv^2$.

Example: 2 kg payload mounted at user flange.

maximum possible projectile energy = $1/2\ (2kg)\ (20.8m/s)^2 = 432$ J (318 ft-lb)

Artisan Technology Group - Quality Instrumentation ... Guaranteed | (888) 88-SOURCE | www.artisantg.com

Additional Safety Information

The standards and regulations listed in this handbook contain additional guidelines for robot system installation, safeguarding, maintenance, testing, start-up, and operator training. The table below lists sources for the various standards.

Table 1-4. Sources for International Standards and Directives

BSI, British Standards Institute Sales Department Linford Wood Milton Keynes MK14 6LE United Kingdom Phone 0181 996 7000 Phone 0181 996 7001	EN 60204, EN 954, EN292, EN 294 IEC 1131, 73, 447
Beuth Verlag GmbH 10722 Berlin Germany Phone 030 26 01 - 22 60 Fax 030 26 01 - 12 60	EN 60204, EN 954, EN292, EN 294 IEC 1131, 73, 447
IEC, International Electrotechnical Commission 1, Rue de Varembe 1211 Geneva 20, Switzerland Phone 022 34 01 50	EN 60204, EN 954, EN292, EN 294 IEC 1131, 73, 447
American Electronics Association Europe 40 Rue des Drapiers 1050 Brussels, Belgium Phone +322 / 502 7015 Fax +322 / 502 6734	

1.5 Intended Use of the Robots

The installation and usage of Adept products must comply with all safety instructions and warnings in this manual. Installation and usage must also comply with all applicable European, international or local requirements and safety standards.

The Adept 550 robot is intended for use in small parts assembly and material handling for payloads typically less than 5.5 kg (12.1 lb).

WARNING: For safety reasons it is prohibited to make certain types of modifications to Adept robots, see section 1.6.

The Adept MV controller and the Adept PA-4 power chassis are intended for use as component sub-assemblies of a complete industrial automation system. The controller and power chassis sub-assemblies must be installed inside a suitable enclosure. The controller and power chassis sub-assemblies must not come into contact with liquids.

The Adept equipment is not intended for use in any of the following situations:

Artisan Technology Group - Quality Instrumentation ... Guaranteed | (888) 88-SOURCE | www.artisantg.com

- In hazardous (explosive) atmospheres
- In mobile, portable, marine, or aircraft systems
- In life-support systems
- In residential installations
- In situations where the Adept equipment will be subject to extremes of heat or humidity. See specifications for allowable temperature and humidity ranges.

WARNING:
Impact Hazard!
It is prohibited to stay in the workcell while the robot is in Automatic Mode. The robot can trap you with high speed. The impact can hurt you.

WARNING:
The given instructions about operation, installation, and maintenance in this Instruction Handbook must be strictly observed.

Non-intended use of an Adept 550 Robot can:

- cause injury to the personnel.
- damage the robot or other equipment.
- reduce the system reliability and the performance of the system.

All persons that are involved in installation, commissioning, operation and maintenance of the robot must:

- have the necessary qualifications
- read and follow exactly the instructions in this Instruction Handbook.

If there is any doubt concerning the application, ask Adept to determine if it is an intended use or not.

1.6 Robot Modifications

It is often necessary to make modifications to Adept robots to successfully integrate them into a workcell. Unfortunately, many seemingly simple modifications can either cause a robot failure, or reduce the robot's performance, reliability, or lifetime.

Acceptable Modifications

In general, the following robot modifications will not cause problems, but may affect robot performance:

- Attaching tooling, utility boxes, solenoid packs, vacuum pumps, screwdrivers, cameras, lighting, etc. to the inner link, outer link, or column. Any loads attached to the moving robot parts must be considered part of the payload.

Artisan Technology Group - Quality Instrumentation ... Guaranteed | (888) 88-SOURCE | www.artisantg.com

- Attaching hoses, pneumatic lines, or cables to the robot. These should be designed so they do not restrict joint motion or cause robot motion errors.

Unacceptable Modifications

The modifications listed below will damage the robot, reduce system safety and reliability, or shorten the life of the robot.

CAUTION: Making any of the modifications outlined below will void the warranty of any components that Adept determines were damaged due to the modification. You must contact Adept Customer Service if you are considering any of the following modifications.

- Modifying any of the robot harnesses or robot to controller cables.
- Modifying any robot access covers or drive system components.
- Modifying, including drilling or cutting, any robot casting.
- Modifying any robot electrical component or PC board other than those explicitly stated in the robot instruction handbook.
- Routing additional hoses, air lines, or wires through the robot.

1.7 Endangerment Through Additional Equipment

Additional equipment, for instance grippers, conveyor belts, etc. are not allowed to reduce the safeguarding of the workcell.

All Emergency Stop Switches must be always accessible.

All components in the robot workcell must comply with the safety requirements in the European Machine Directive 89/392/EEC (and subsequent amendments) and the related harmonized European, international, and national standards.

1.8 Working Areas

Adept robots have both a Manual and an Automatic operating mode. While in Automatic mode, no personnel are allowed to stay in the workcell.

In Manual mode operators with additional safety equipment (see section 1.11 on page 11) are allowed to work in the robot workcell. For safety reasons the operator should, whenever possible, stay outside of the working envelope of the robot to prevent injury. The maximum speed of the robot is reduced but it could still cause injury to the operator.

Before performing maintenance in the working envelope of the robot, High Power must be switched off and the power supply of the robot must be disconnected. After these precautions a skilled person is allowed to maintain the robot. See section 1.9 on page 10 for the specifications of the personnel.

Artisan Technology Group - Quality Instrumentation ... Guaranteed | (888) 88-SOURCE | www.artisantg.com

WARNING:
Electrical Hazard!
Impact Hazard!

Never remove any safeguarding and never make changes in the system that will de-commission a safeguard.

1.9 Qualification of Personnel

This manual assumes that the personnel have attended an Adept training course and have a working knowledge of the system. The user must provide the necessary additional training for all personnel who will be working with the system.

As noted in this handbook, certain procedures should be performed only by **skilled** or **instructed** persons. For a description of the level of qualification Adept uses the standard terms:

- **Skilled persons** have technical knowledge or sufficient experience to enable them to avoid the dangers which electricity may create (engineers and technicians).
- **Instructed persons** are adequately advised or supervised by skilled persons to enable them to avoid the dangers which electricity may create (operating and maintenance staff).

All personnel must observe sound safety practices during the installation, operation and testing of all electrically powered equipment. To avoid injury or damage to equipment, always remove power by disconnecting the AC power cord from the source before attempting any repair or upgrade activity.

WARNING: The user is obligated to get confirmation from every entrusted person before they start working with the robot about the following subjects:
1.) The person has received the instruction handbook, has read it, has understood it and
2.) will work in the described manner.

1.10 Transport

Always use adequate equipment to transport and lift Adept devices. See Chapter 2 for more information on transporting, lifting, and installing.

WARNING: Do not stay under the robot while it is transported.

Artisan Technology Group - Quality Instrumentation ... Guaranteed | (888) 88-SOURCE | www.artisantg.com

1.11 Safety Equipment for Operators

Adept advises operators to wear extra safety equipment in the workcell. For safety reasons the operators must wear

- safety glasses,
- protective headgear,
- and safety shoes

when they are in the robot workcell. Install warning signs around the workcell to make sure anyone working around the robot system knows they must wear safety equipment.

1.12 Protection Against Unauthorized Operation

The system must be protected against unauthorized use. Restrict access to the keyboard and the Manual Control Pendant by locking them in a cabinet or use another adequate method to prevent access to them.

1.13 Operating Modes of Adept Robots

The Adept 550 robot has two different operating modes.

Automatic Mode

Adept Robot systems are computer-controlled, and the program that is currently running the robot may cause it to move at times or along paths you may not anticipate. When the key switch for the operating mode is in the AUTO position and the HIGH POWER light or the PROGRAM RUNNING light on the external Front Panel (VFP) are illuminated, do not enter the workcell because the robot or motion device might move unexpectedly. (The LAMP TEST button on the VFP allows these lights to be periodically checked.)

WARNING: During Automatic Mode operations no person is allowed to stay in the guarded space of the robot, because injury can occur if a person is struck by the robot.

Manual Mode

Adept robots can also be controlled manually when the operating mode key switch is in the MANUAL position and the HIGH POWER light on the VFP is illuminated. When Manual mode is selected, motion can be only initiated from the Manual Control Pendant (MCP). Per ISO 10218, the maximum speed of the robot is limited to 250 mm per second (10 ips) in Manual mode. In this mode, work that requires close approach to the installation or robot can be performed; such as teaching points, program verification, or troubleshooting operations.

Artisan Technology Group - Quality Instrumentation ... Guaranteed | (888) 88-SOURCE | www.artisantg.com

NOTE: The MCP has two operating modes. In MAN (Manual) mode the MCP can initiate a robot motion. In COMP (Automatic) mode the MCP works like a terminal.

1.14 Safety Aspects While Performing Maintenance

Only skilled persons with the necessary knowledge about the safety and operating equipment are allowed to maintain the robot, controller, and power chassis.

WARNING: During maintenance and repair, the power of the Adept PA-4 power chassis and the Adept MV controller must be turned off. Unauthorized third parties must be prevented from turning on power through the use of fail-safe lockout measures. (Turn off the circuit breakers, lock the cabinet and remove the key!).

1.15 Risks That Cannot Be Avoided

The Adept 550 Robot Control system implementation has devices that disable High Power if a system failure occurs.

The following situations may result in risks that cannot be avoided:

- purposely defeating any aspect of the safety E-Stop system
- improper installation or programming of the robot system
- unauthorized use of cables other than those supplied or use of modified components in the system

Take precautions to ensure that these situations do not occur.

1.16 What to Do in an Emergency Situation

Press any Emergency-Stop button (a red push-button on a yellow field) and then follow the internal procedures of your company or organization for an emergency situation. If a fire occurs, use CO_2 to extinguish the fire.

Artisan Technology Group - Quality Instrumentation ... Guaranteed | (888) 88-SOURCE | www.artisantg.com

1.17 How to Get Help

When calling with an equipment-related question, please have the serial number of the robot, controller, and power chassis. The serial numbers are located on the product data labels on each piece of equipment. The serial numbers can also be determined by using the ID command (see the *V+ Operating System User's Guide*).

In Europe

Europe/Germany

Adept Technology maintains a European Customer Service Center in Dortmund, Germany. The phone numbers are:

(49) 231 / 75 89 40 (Monday to Friday, 8:00 to 17:00,CET)
(49) 231 / 75 89 450 FAX

France

For customers in France, Adept Technology maintains a Customer Service Center in Paris, France. The phone numbers are:

(33) 1 69 19 16 16 (Monday to Friday, 8:30 to 17:30, CET)
(33) 1 69 32 04 62 FAX

Italy

For customers in Italy, Adept Technology maintains a Customer Service Center in Arezzo, Italy. The phone numbers are:

(39) 575 3986 11 (Monday to Friday, 8:30 to 17:30, CET)
(39) 575 3986 20 FAX

In the United States

Adept Technology maintains a Customer Service Center at its headquarters in San Jose, CA. The phone numbers are:

Service Calls

(800) 232-3378 (24 hours per day, 7 days a week)
(408) 433-9462 FAX

Application Questions

(800) 232-3378 (Monday to Friday, 8:00 am to 5:00 pm, Pacific time)
(408) 434-6248 FAX

Applications Internet E-Mail Address

If you have access to the Internet, you can send applications questions by e-mail to:

applications@adept.com

Training Information

For information regarding Adept Training Courses in the USA, please call (408) 434-5024.

Artisan Technology Group - Quality Instrumentation ... Guaranteed | (888) 88-SOURCE | www.artisantg.com

Outside Continental United States or Europe

For service calls, application questions, and training information, call the Adept Customer Service Center in San Jose, California USA:

1 (408) 434-5000
1 (408) 433-9462 FAX (service requests)
1 (408) 434-6248 FAX (application questions)

Artisan Technology Group - Quality Instrumentation ... Guaranteed | (888) 88-SOURCE | www.artisantg.com

Installation 2

2.1 Environmental and Facility Requirements for Robot 17

Facility Ambient Air Quality For Robots 17
Robot Workcell Free Space 17

2.2 Environmental and Facility Requirements for Controller 17

2.3 Environmental and Facility Requirements Power Chassis. 18

2.4 Before Unpacking Adept Equipment 18

2.5 Adept Shipment Specifications 18

2.6 Transport and Storage 18

2.7 Unpacking and Inspecting the Adept Equipment. 19

2.8 Repackaging For Relocation 19

2.9 Robot Installation. 20

Mounting Surface 20
Tool and Equipment Requirements 20
Mounting Procedure 20

2.10 Installation of the Adept MV Controller and the Adept PA-4 Power Chassis 22

Joining an Adept PA-4 Power Chassis to an Adept MV Controller 22
Space Around the Chassis 24
Installation in a Rack or Panel Mount 24

2.11 Installing the A-Series Monitor and Keyboard 27

Installation Procedure 27

2.12 Installing a Terminal in an S-Series System 28

Recommended Terminal for S-Series Systems 28
Installation Procedure 28

2.13 Installing the External Front Panel 29

Controls and Indicators. 29
Installing the External Front Panel (VFP). 30

2.14 Signal Interconnection Installation 31

System Cable Connections 31
Connecting the Robot to the Power Chassis 32
Installing Signal Cables: Robot to MV Controller 33
Installing Signal Cables: MV Controller to Power Chassis 34
Connecting the MCP to the VFP 35

2.15 Grounding Information 36

Artisan Technology Group - Quality Instrumentation ... Guaranteed | (888) 88-SOURCE | www.artisantg.com

Adept MV Controller Grounding 36
Adept PA-4 Power Chassis Grounding 36
Adept Robot Grounding 36
Robot-Mounted Equipment Grounding 36
2.16 Connecting to AC Power 37
Connecting AC Power to the MV Controller 37
Connecting AC Power to the Adept PA-4 Power Chassis 39
2.17 Additional Power Chassis Information 44
Overview of B+ Amplifier Module 44
Circuit Breaker and Fuse Information 45
Removing and Installing Amplifier Modules 45
2.18 Installing End-Effectors on an Adept 550 Robot 46
2.19 Removing and Installing the User Flange 47
Removing the Flange 47
Installing the Flange 47
2.20 User Connections on Robot 48
User Air Lines 48
User Electrical Lines 48

Artisan Technology Group - Quality Instrumentation ... Guaranteed | (888) 88-SOURCE | www.artisantg.com

2.1 Environmental and Facility Requirements for Robot

Facility Ambient Air Quality For Robots

Table 2-1. Operating Environment Specifications for Adept Robots

	Temperature	Relative Humidity	IP Rating[a]
Standard Robot	5° to 40° C (41° to 104° F)	5 to 95% non-condensing	IP 20
CleanRoom Robot	5° to 40° C (41° to 104° F)	5 to 95% non-condensing	IP 20

[a] The IP rating also applies to the motors inside the robot.

Robot Workcell Free Space

The workcell design should allow the Adept 550 freedom of movement within the area specified in Figure 6-13 on page 95. Additional allowances maybe required to accommodate any installed end-of-arm tooling.

2.2 Environmental and Facility Requirements for Controller

The Adept MV controller installation must meet the operating environment requirements shown in Table 2-2. See Table 2-5 on page 37 for electrical requirements.

Table 2-2. Operating Environment Requirements

Ambient temperature	
controller – while accessing floppy or hard drive	5°C to 40°C (32 to 104°F)
controller – while not accessing floppy or hard drive	5°C to 50°C (32 to 122°F)
power chassis	5°C to 40°C (32 to 104°F)
Humidity	5 to 90%, non-condensing
Altitude	up to 2000 m (6500 ft.)
Pollution degree	2
Free space around controller and power chassis (for proper cooling)	50 mm (2") in front, 25 mm (1") at top
Sub-assembly protection class, unmounted	IP20 (NEMA Type 1)
Requirements for customer-supplied enclosure with Adept controller and power chassis mounted inside enclosure.	Enclosure must meet EN 60204 and be rated at IP54. Also, enclosure must provide a method of locking the enclosure power-disconnect in the OFF position.

Artisan Technology Group - Quality Instrumentation ... Guaranteed | (888) 88-SOURCE | www.artisantg.com

2.3 Environmental and Facility Requirements Power Chassis

The Adept PA-4 power chassis is typically installed in the same enclosure as the controller. See Table 2-2 for environmental requirements. See Table 2-7 on page 39 for electrical requirements.

2.4 Before Unpacking Adept Equipment

Carefully inspect all shipping crates for evidence of damage during transit. Pay special attention to tilt and shock indication labels (if they are present) on the exteriors of the containers. If any damage is indicated, request that the carrier's agent be present at the time the container is unpacked.

2.5 Adept Shipment Specifications

Adept ships the equipment in a number of boxes and shipping crates, depending on the order. The boxes have different dimensions and weights. The following table gives an overview.

Table 2-3. Adept Shipping Crate Specifications

Product in Crate	Length	Width	Height	Weight
Adept 550 Robot	0.64 m (25 in.)	0.64 m (25 in.)	1.14 m (45 in.)	50 kg (110 lb)
Adept MV Controller and PA-4 Power Chassis	0.89 m (35 in.)	0.64 m (25 in.)	0.96 m (38 in.)	66 kg (145 lb)
Monitor	0.54 m (21 in.)	0.51 m (20 in.)	0.51 m (20 in.)	23 kg (50 lb)

WARNING: The center of gravity of the robot shipping crates is not in the middle of the boxes. Pay attention when you transport the crates.

2.6 Transport and Storage

For the transport and storage of the crates and boxes use a adequate tool, for instance a pallet jack or a fork lift. See Figure 2-1.

WARNING: Heavy load!
Do not attempt to transport the robot boxes by hand. Always use a pallet jack, fork lift, etc.

Artisan Technology Group - Quality Instrumentation ... Guaranteed | (888) 88-SOURCE | www.artisantg.com

The robots must be always stored and shipped in an upright orientation. Do not lay the crate on the side or another position. A different position other than standing on the robot base could damage the robot.

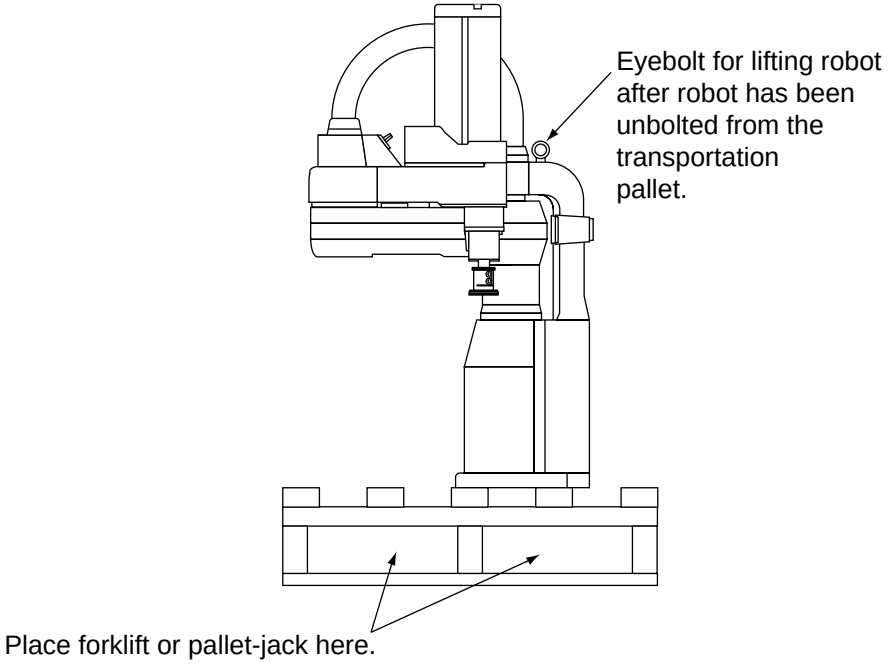

Figure 2-1. Adept 550 Robot on a Transportation Pallet

2.7 Unpacking and Inspecting the Adept Equipment

Compare the actual items received (not just the packing slip) with your equipment purchase order and verify that all items are present and that the shipment is correct.

Inspect each item for external damage as it is removed from its container. If any damage is evident, contact Adept at the numbers listed at the end of Chapter 1.

Retain all containers and packaging materials. These items may become necessary to settle claims or, at a later date, to relocate equipment.

2.8 Repackaging For Relocation

If the robot or other equipment needs to be relocated, reverse the steps in the installation procedures that follow this section. Re-use all original packing containers and materials and follow all safety notes used for installation. Improper packaging for shipment will void your warranty. Before unbolting the robot from the mounting base, fold the outer arm against the Joint 2 hardstops to help centralize the center of gravity. The robot must always be shipped in an upright orientation; specify this to the carrier if the robot has to be shipped.

Artisan Technology Group - Quality Instrumentation ... Guaranteed | (888) 88-SOURCE | www.artisantg.com

2.9 Robot Installation

Mounting Surface

The Adept 550 robot is designed to be mounted on a smooth, flat, level tabletop. The mounting structure must be rigid enough to prevent vibration and flexing during robot operation. Excessive vibration or mounting flexure will degrade robot performance. Figure 2-2 shows the mounting hole pattern for the Adept 550.

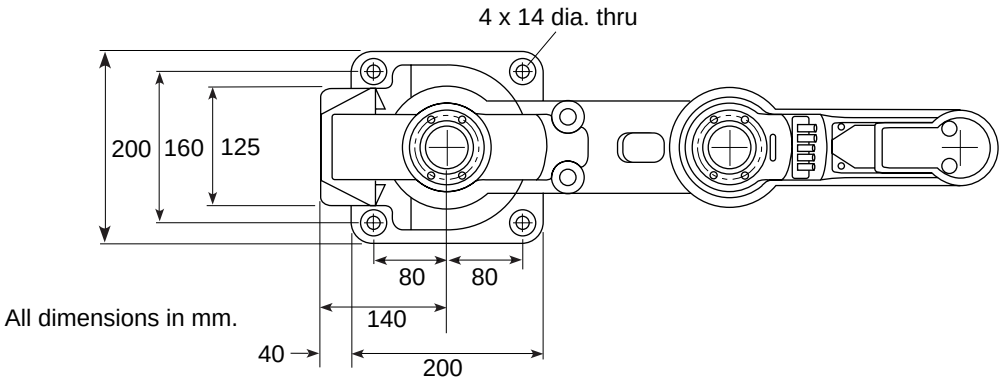

Figure 2-2. Mounting Hole Pattern (Robot-to-Mounting Surface)

Tool and Equipment Requirements

Common hand tools, plus the following items, are required to install the robot:

- Hydraulic lift
- Mounting structure, such as a tabletop or mounting spool
- Torque wrench

WARNING: The installation procedures in this chapter should only be performed by skilled persons, as defined in section 1.9 on page 10.

Mounting Procedure

1. Using the dimensions shown in Figure 2-2, drill and tap the mounting surface for four M12 - 1.75 x 36mm (or 7/16 - 14 UNC x 1.50 inch) machine bolts (bolts not provided). See Table 2-4 for bolt and torque specifications.
2. While the robot is still bolted to the transportation pallet, connect the hydraulic lift to the eyebolt at the top of the robot, see Figure 2-1. Take up any slack but do not lift the robot at this time.

Artisan Technology Group - Quality Instrumentation ... Guaranteed | (888) 88-SOURCE | www.artisantg.com

WARNING: Impact Hazard
Do not attempt to lift the robot at any points other than the eyebolt provided. Do not attempt to extend the inner or outer links of the robot until the robot has been secured in position. Failure to comply could result in the robot falling and causing either personnel injury or equipment damage.

3. Remove the four bolts securing the robot base to the pallet. Retain these bolts for possible later relocation of the equipment.
4. Lift the robot and position it directly over the mounting surface.

WARNING: Impact Hazard
The robot may swing free if not lifted straight up. Stand clear of the robot at all times while it is supported by the lift.

5. Slowly lower the robot while aligning the base and the tapped mounting holes in the mounting surface.
6. Install the customer-supplied mounting bolts. Tighten bolts to torque specified in Table 2-4.

NOTE: Check the tightness of the mounting bolts one week after initial installation, and then recheck every 6 months. See Chapter 5 for periodic maintenance.

Table 2-4. Mounting Bolt Specifications

Standard	Size	Specification	Torque
Metric	M12 x P1.75	ISO Property Class 8.8	85 Nm
SAE	7/16-14 UNC	SAE Grade 5	50 ft-lb

Artisan Technology Group - Quality Instrumentation ... Guaranteed | (888) 88-SOURCE | www.artisantg.com

2.10 Installation of the Adept MV Controller and the Adept PA-4 Power Chassis

Joining an Adept PA-4 Power Chassis to an Adept MV Controller

The Adept PA-4 power chassis can be joined to the Adept MV-8 (or MV-19) controller using the brackets supplied in the accessory kit. They must be joined at the top *and* bottom, as described in the following paragraphs.

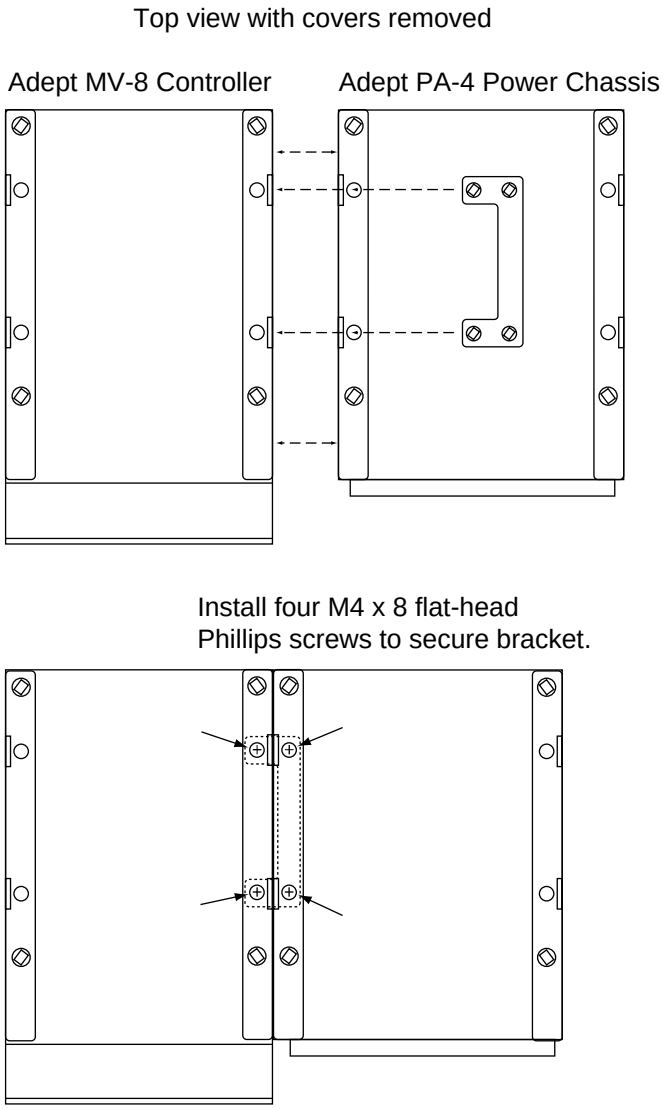

Figure 2-3. Joining the Power Chassis and Controller at the Top

Artisan Technology Group - Quality Instrumentation ... Guaranteed | (888) 88-SOURCE | www.artisantg.com

Joining at the Top

1. Place the two units next to each other. Turn off power to each unit and disconnect the power cord. Remove the top cover from both. See Figure 2-3
2. Locate the C-shaped bracket in the accessory kit.
3. Slip the bracket under the lip of the top edge of the unit on the right-hand side and into the two slots in the edge of the chassis. Install two M4 x 8 flat head screws into the lip and down into the bracket.
4. Install the other two M4 x 8 flat head screws into the chassis on the left-hand side. Replace the cover on each unit.

Joining at the Bottom

1. Turn the two units over so you have access to the bottom side.
2. Locate the cutout bracket in the accessory kit.
3. Place the bracket over the feet of the units as shown in Figure 2-4.
4. Install the four M4 x 8 flat head screws in the holes indicated in Figure 2-4 to secure the brackets.

CAUTION: Do not use screws longer than 8 mm to install the bracket. Doing so could cause damage to your equipment.

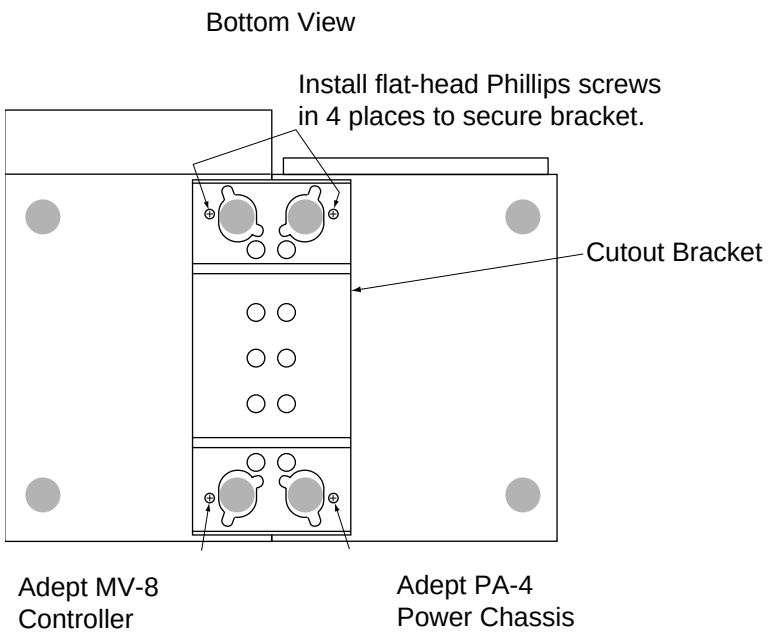

Figure 2-4. Joining the Power Chassis and Controller at the Bottom

Artisan Technology Group - Quality Instrumentation ... Guaranteed | (888) 88-SOURCE | www.artisantg.com

Space Around the Chassis

When the controller and power chassis are installed, you must allow 50 mm (2 inches) at the front of each chassis and 25 mm (1 inch) at the top of each chassis for proper air cooling.

CAUTION: It is important to keep the air filters clean so the forced air cooling system can work efficiently. See section 5.5 on page 79 for details on cleaning the filters.

Installation in a Rack or Panel Mount

The power chassis and controller can be mounted in a rack or panel by using the mounting brackets that are shipped in the accessories kit. The brackets can be attached at the rear of the controller / power chassis for panel mounting or they can be attached to the front of the controller / power chassis for rack mounting.

Panel Mounting

To panel mount the controller or power chassis, install one bracket on each side near the back of the chassis. Use the screws and washers from the accessories kit. See Figure 2-5 and Figure 2-6.

Rack Mounting

To rack mount the Adept PA-4 power chassis joined to an Adept MV-8 controller in a standard 19-inch equipment rack, you must use the mounting brackets, screws, and washers from the accessories kit. The brackets can be installed in two positions for rack mounting: flush and set-back. See Figure 2-5 and Figure 2-6.

To rack mount the controller or power chassis by itself in a standard 19-inch equipment rack, you must first install the mounting brackets, then build an extender panel and attach it to the bracket on one side of the chassis.

Artisan Technology Group - Quality Instrumentation ... Guaranteed | (888) 88-SOURCE | www.artisantg.com

To Install Mounting Brackets on **Adept MV controller**:

- Remove (and discard) 3 existing countersunk screws from side of chassis at locations shown in drawing.
- Place bracket in desired position and secure with indicated M4 screws and washers from accessories kit.
- Repeat process for other side of controller. If the controller is joined to an Adept PA-4 Power Chassis, the position of the screws is different on the side of the controller. See the drawing for the power chassis.

Note: See Figure 6-8 on page 89 for dimensions of the controller and mounting brackets.

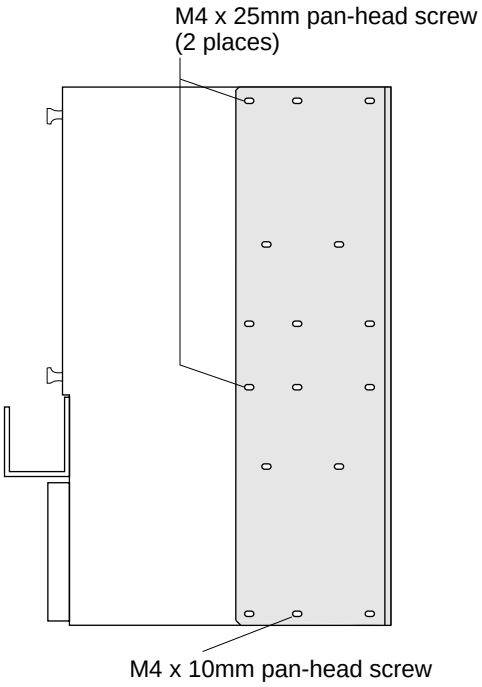

Panel Mount

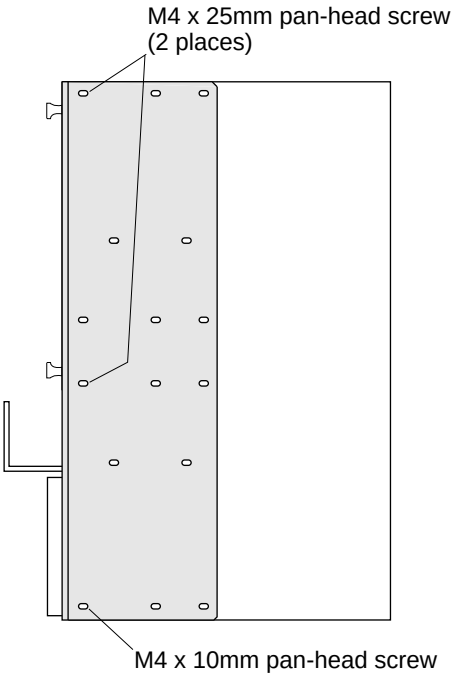

Rack Mount – Flush

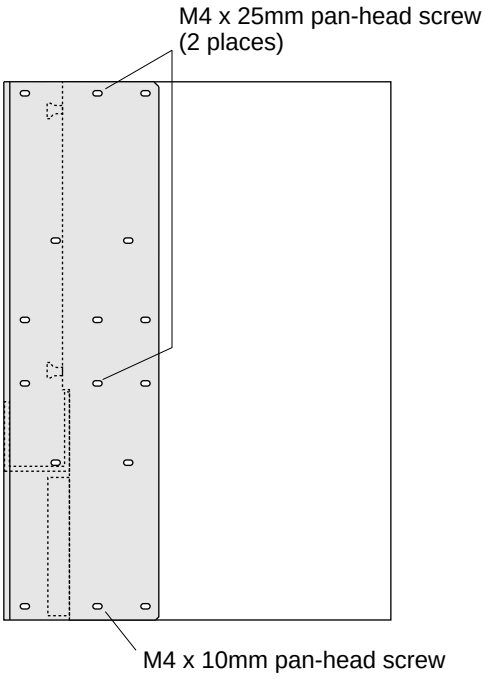

Rack Mount – Set-Back

Figure 2-5. Installing Mounting Brackets on an Adept MV Controller

Artisan Technology Group - Quality Instrumentation ... Guaranteed | (888) 88-SOURCE | www.artisantg.com

To Install Mounting Brackets on **Adept PA-4 Power Chassis**:

- Remove (and discard) 3 existing countersunk screws from side of chassis at locations shown in drawing.
- Place bracket in desired position and secure with indicated M4 pan-head screws and washers from accessories kit.
- Repeat process for other side of chassis. If the power chassis is joined to an Adept MV controller, the position of the screws is different on the side of the controller. See the controller drawing.

Note: See Figure 6-8 on page 89 for dimensions of the chassis and mounting brackets.

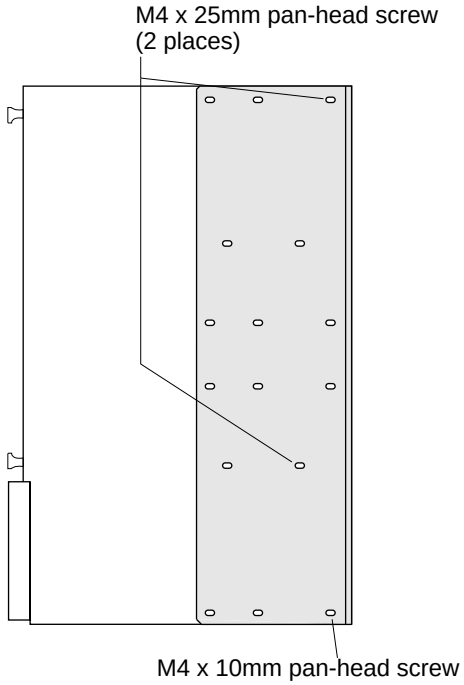

Panel Mount

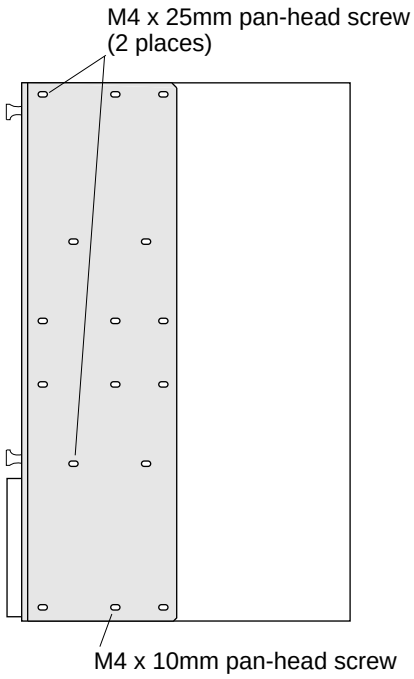

Rack Mount – Flush

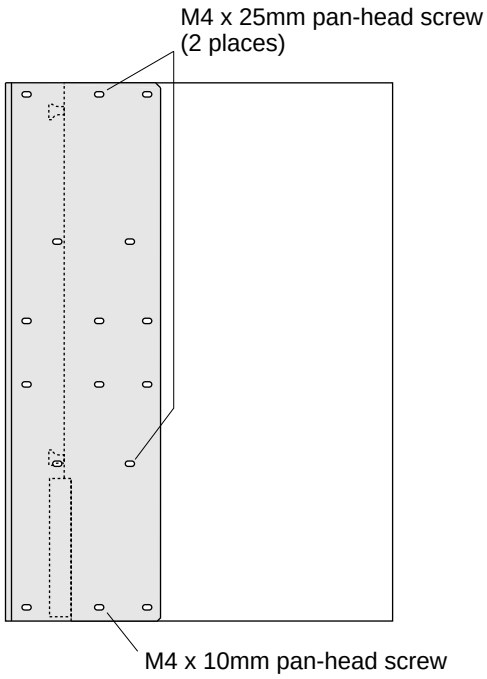

Rack Mount – Set-Back

Figure 2-6. Installing Mounting Brackets on an Adept PA-4 Power Chassis

Artisan Technology Group - Quality Instrumentation ... Guaranteed | (888) 88-SOURCE | www.artisantg.com

2.11 Installing the A-Series Monitor and Keyboard

NOTE: The peripheral equipment such as the keyboard and monitor supplied by Adept are intended for use in light industrial conditions. In more severe conditions, they should be protected with a suitable enclosure.

Installation Procedure

An A-Series Adept MV controller can be configured with a color monitor and an extended keyboard with built-in trackball. Both of these devices connect to the VGB module.

See Figure 2-7 for details; the steps are listed below.

1. Make sure the controller is turned off before making any connections.

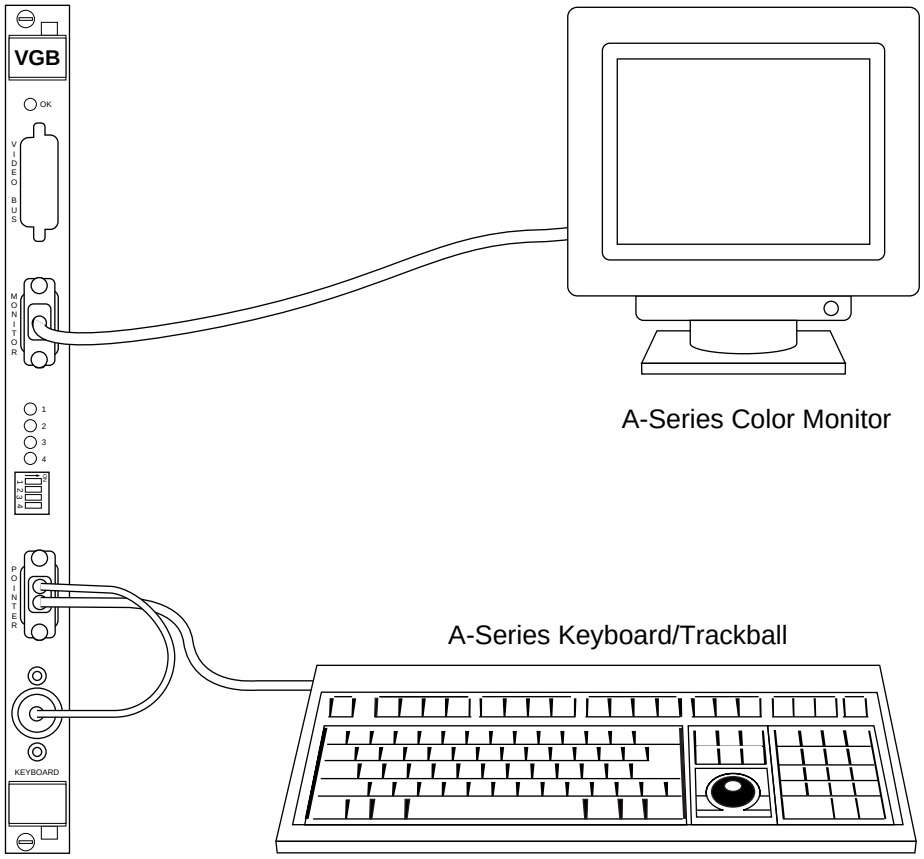

Figure 2-7. Connecting the A-Series Monitor and Keyboard

2. Connect the monitor signal cable to the MONITOR connector on the VGB module.
3. Connect the double-ended keyboard cable to the KEYBOARD connector and the POINTER connector on the VGB module.

Artisan Technology Group - Quality Instrumentation ... Guaranteed | (888) 88-SOURCE | www.artisantg.com

4. Verify the voltage range marked on the monitor is compatible with your local voltage source. Connect the color monitor AC power cord to the monitor, then plug it into an appropriate voltage source.

2.12 Installing a Terminal in an S-Series System

With an S-Series Adept MV controller system, the customer must supply the terminal and cable to interface to the controller. The terminal must be a Wyse Model 60 or 75 with an ANSI keyboard, or a compatible terminal. You may also be able to use a computer with suitable terminal emulation software. For DOS or Windows-compatible computers, the programs “Procomm+” or “Procomm for Windows” (available from many computer stores) include software emulation for the Wyse-75.

Recommended Terminal for S-Series Systems

The recommended terminal for use with the Adept MV controller is the Wyse WY-60. You must also specify that you require the Wyse ANSI/VT100 style keyboard (Wyse p/n 900127-02 or 900128-02). Note: The WY-60 is also available with ASCII and IBM Enhanced PC keyboards. These are *not* Adept-compatible. You must make sure you order the correct keyboard. The WY-60 is available in both 220V and 110V configurations.

Installation Procedure

1. Make sure the controller is turned off before making any connections.
2. Verify the voltage range marked on the terminal is compatible with your local voltage source. Connect the AC power cord to the terminal, then plug it into an appropriate voltage source.
3. Connect a suitable serial cable between the terminal and the RS-232/TERM connector on the System Processor module.
4. If the terminal is a Wyse 60, use the setup mode to set the personality to “WY-75”. If you are using terminal emulation software on a computer, set the software to “WY-75” emulation. If “WY-75” is not available, try “VT102” or “VT100”, but you will not be able to use all of the function keys.
5. Set the terminal baud rate to 9600, that is the default rate for the Adept system. To change the baud rate, refer to the information on CONFIG_C in the *Instructions for Adept Utility Programs*.

Artisan Technology Group - Quality Instrumentation ... Guaranteed | (888) 88-SOURCE | www.artisantg.com

2.13 Installing the External Front Panel

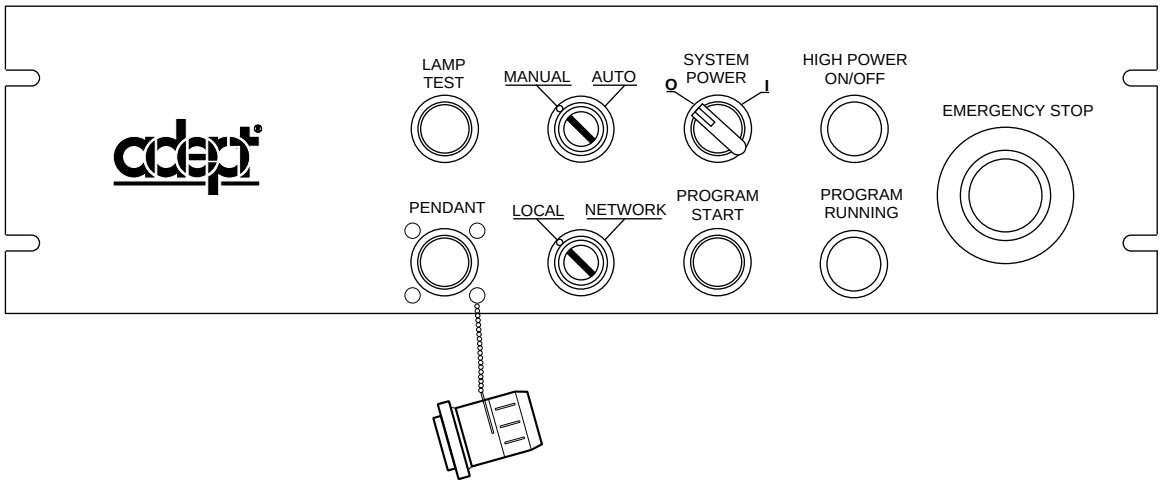

Figure 2-8. External Front Panel (VFP)

Controls and Indicators

- **EMERGENCY STOP switch:** This push-pull emergency stop switch removes HIGH POWER and brings any installed motion device to an immediate stop when pressed.
- **HIGH POWER ON/OFF switch and lamp (amber):** This push-button switch works in conjunction with the Enable Power command. When flashing, this lamp signals the operator to press the button to enable High Power. If the amber lamp is on, the robot is operating under servo control with the brakes released. When the lamp is on, pressing the button disables High Power and engages the Joint 3 brake.
- **PROGRAM RUNNING lamp (white):** When lit, this lamp indicates that a V^+ program is running. It is a warning that the robot and other mechanisms in the workcell are under computer control and may move at any time.
- **SYSTEM POWER switch and lamp (green):** This rotary on / off switch controls the main AC power relay. The green lamp is lit when main AC power is on.
- **PROGRAM START switch and lamp (green):** A programmer can read the status of the button to trigger special events.
- **Operating Keyswitch:** The keyswitch is a 2-position rotary switch marked AUTO and MANUAL. This switch determines which operating mode is selected. The AUTO position permits control of the system from the controller. The MANUAL position makes the MCP the single point of control.
- **Control Keyswitch:** The keyswitch is a 2-position rotary switch marked LOCAL and NETWORK. This switch determines which device is able to start robot motions. The LOCAL position makes the Manual Control Pendant (MCP) or the connected Terminal the single point of control. The NETWORK position is used with host supervisory control software.
- **LAMP TEST switch:** When the button is pressed, all the indicator lamps should light. If an indicator does not light, check it before continuing operation.

Artisan Technology Group - Quality Instrumentation ... Guaranteed | (888) 88-SOURCE | www.artisantg.com

- **PENDANT:** connector for attaching the Manual Control Pendant (MCP) to the front panel. In order to enable High Power, either the MCP or the supplied pendant jumper plug must be connected.

Installing the External Front Panel (VFP)

The VFP can be mounted in a standard 19-inch equipment rack. See Figure 6-7 on page 88 for dimensions. Since the back of the VFP is open, make sure that it is securely mounted and that electronic components on the back side of the panel are protected from contact by users or other equipment. Mount the VFP in the same enclosure as the controller, or in a separate, protected enclosure. See Table 2-2 for enclosure requirements. See Figure 2-9 as you follow the procedure below.

1. Turn off the Adept MV controller power switch.
2. Remove the FP / MCP bypass plug from the FP / MCP connector on the SIO module.
3. Locate the 2-meter Front Panel cable that comes with the VFP. Plug one end into the FP / MCP connector on the SIO module. Plug the other end into the 26-pin D-Sub connector on the back of the VFP. Tighten the thumbscrews on both connectors.
4. If you are not using an MCP, install the MCP bypass plug in the MCP connector of the VFP. If you are using an MCP, refer to page 35.

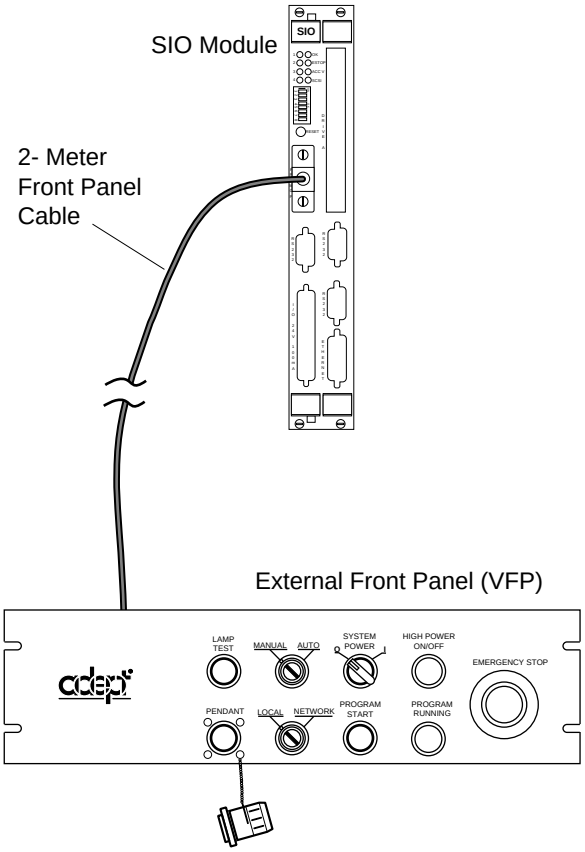

Figure 2-9. External VME Front Panel Installation

Artisan Technology Group - Quality Instrumentation ... Guaranteed | (888) 88-SOURCE | www.artisantg.com

2.14 Signal Interconnection Installation

System Cable Connections

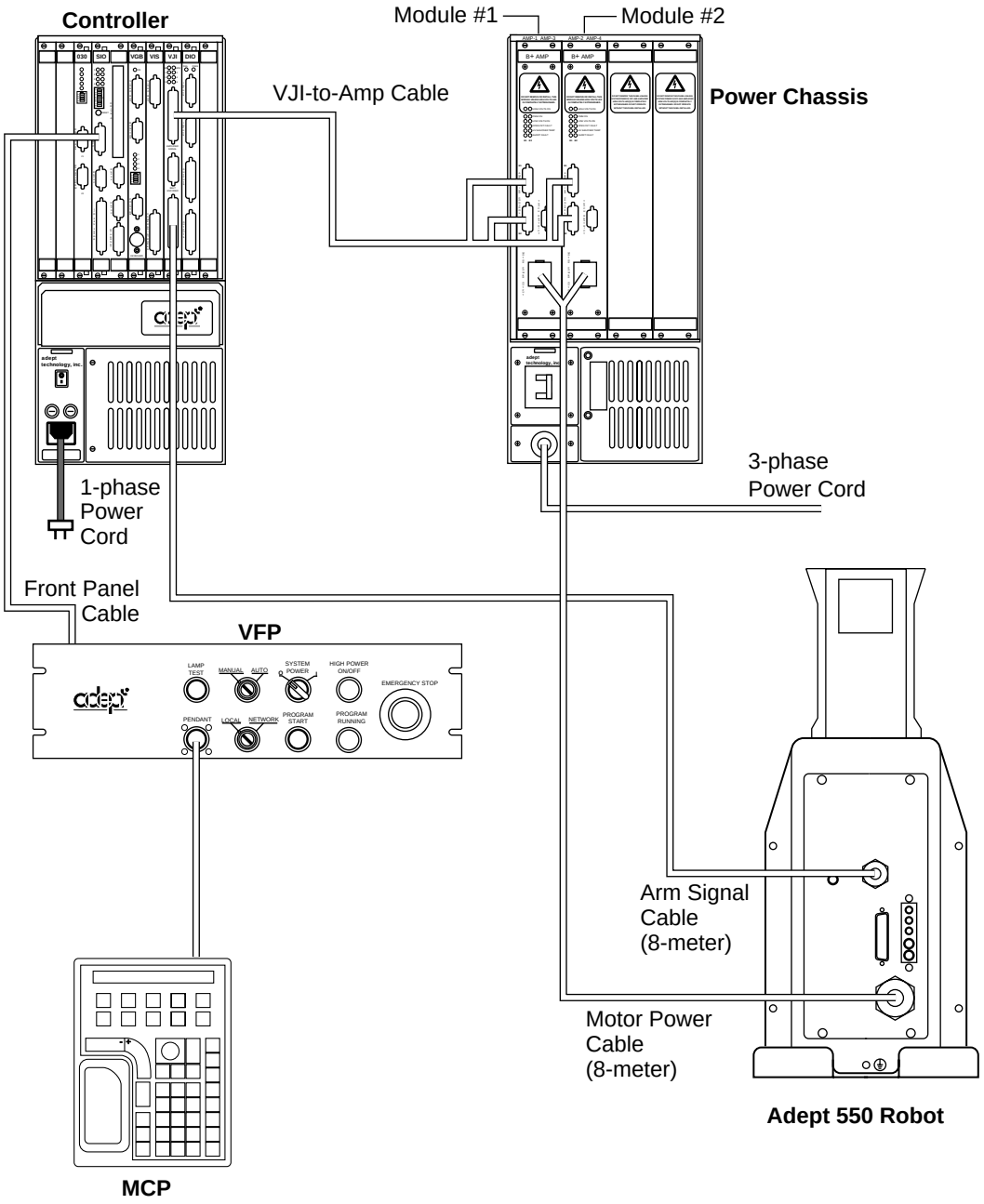

Figure 2-10. Adept 550 Robot System Cable Installation

Artisan Technology Group - Quality Instrumentation ... Guaranteed | (888) 88-SOURCE | www.artisantg.com

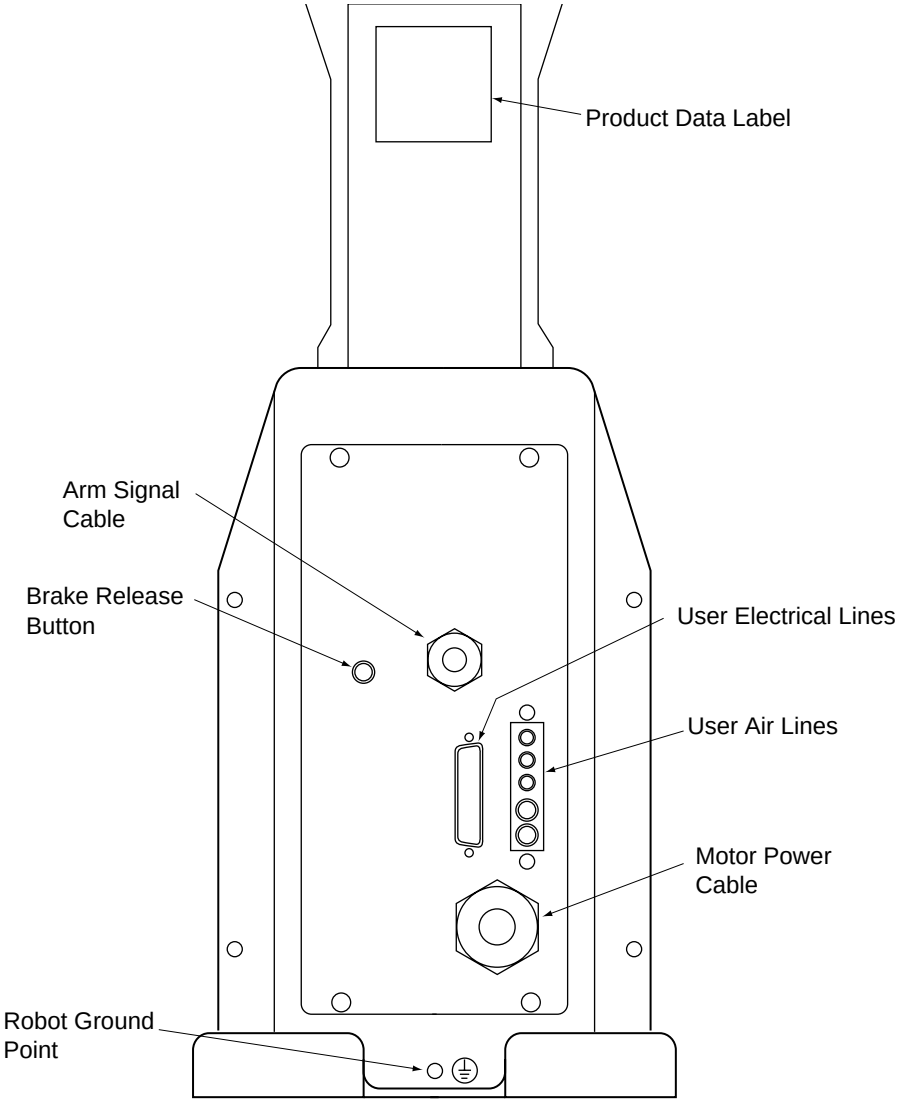

Figure 2-11. Adept 550 Robot Rear Panel

Connecting the Robot to the Power Chassis

The 8-meter cable between the robot and power chassis is called the Motor Power cable. It is permanently attached at the robot, and has two square connectors on the power chassis end. This cable carries high-voltage DC power to the motors. This independent DC circuit can only be isolated using the circuit breaker on the front of the Adept PA-4 power chassis. See Figure 2-10.

WARNING: Turn off the power to the power chassis before installing or removing any cables. Failure to observe this warning could cause injury or damage to your equipment.

Do not turn on the power chassis without installing the motor power cables. Dangerous AC and DC voltages may be present at the “Motor Power Output” connectors on the amplifier modules.

Artisan Technology Group - Quality Instrumentation ... Guaranteed | (888) 88-SOURCE | www.artisantg.com

NOTE: The system integrator must add adequate strain relief for the Motor Power cable connectors at the amplifier modules.

1. Connect the Motor Power cable to the two matching connectors on the amplifier modules in the following order.
   a. Install the plug labeled **B+ Amp #1** in the connector marked “Motor Power Output” on **Module 1**.
   b. Install the plug labeled **B+ Amp #2** in the connector marked “Motor Power Output” on **Module 2**.
2. Pull gently on the connector bodies to ensure they are securely latched.

WARNING: Verify that all connectors are secure and fully inserted. Failure to do this could cause unexpected robot motion.

Installing Signal Cables: Robot to MV Controller

The 8-meter cable between the robot and the VJI module in the Adept MV controller is called the Arm Signal cable. It is permanently attached at the robot, and the controller end has a 50-pin D-sub connector. See Figure 2-10

1. Connect the 50-pin D-sub connector to the Arm Signal connector (lower) on the VJI module. See Figure 2-12.
2. Tighten the two captive screws securely.

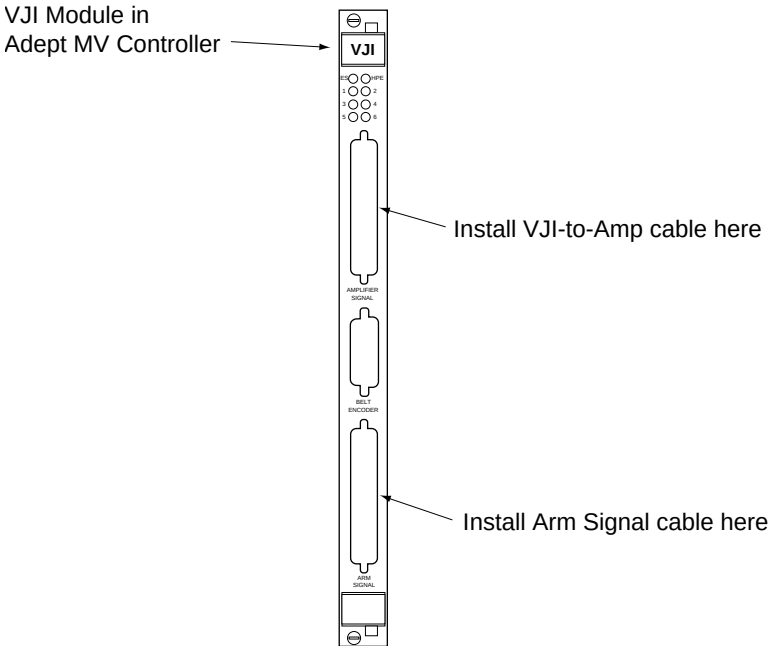

Figure 2-12. Robot-to-VJI Cable Installation

Artisan Technology Group - Quality Instrumentation ... Guaranteed | (888) 88-SOURCE | www.artisantg.com

WARNING: Verify that all connectors are fully inserted and screwed down. Failure to do this could cause unexpected robot motion. Also, a connector could get pulled out or dislodged unexpectedly.

Installing Signal Cables: MV Controller to Power Chassis

The VJI-to-Amp cable must be installed between the controller and the power chassis. This cable assembly has a single plug on one end (for the VJI) and four plugs on the other end (for the amplifiers).

1. Connect the cable end with the single connector to the connector marked “Amplifier Signal” (upper) on the VJI module. Tighten the screws. See Figure 2-10.
2. The other end of the cable with four plugs must be connected in the following *special* pattern. See Figure 2-13.
   a. Connect the plug labeled Amplifier Ctrl 1 to the B1 connector on Module 1.
   b. Connect the plug labeled Amplifier Ctrl 3 to the B2 connector on Module 1.
   c. Connect the plug labeled Amplifier Ctrl 2 to the B1 connector on Module 2.
   d. Connect the plug labeled Amplifier Ctrl 4 to the B2 connector on Module 2.
3. Verify that all connectors are secure and fully inserted and installed in the correct location.

WARNING: Verify that all connectors are fully inserted and screwed down. Failure to do this could cause unexpected robot motion. Also, a connector could get pulled out or dislodged unexpectedly.

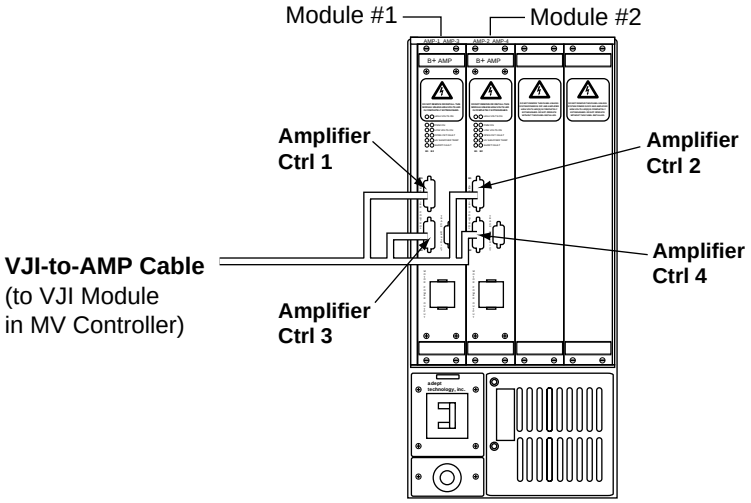

Figure 2-13. Power Chassis to VJI Cable Installation

Artisan Technology Group - Quality Instrumentation ... Guaranteed | (888) 88-SOURCE | www.artisantg.com

Connecting the MCP to the VFP

The MCP is connected to the system at the Pendant connector on the VFP (see Figure 2-14). See Chapter 4 for instructions on using the MCP.

Install the MCP to the connector that is marked PENDANT on the VFP.

WARNING: The VFP has two keyswitches. One to select the device that controls program execution and one to select the operating mode. Before it is possible to use the MCP in the workcell, the operating keyswitch must be set to MANUAL and the other one to LOCAL. This will prevent program execution from being started from the keyboard or terminal.

CAUTION: The coiled cable on the MCP III has been tested to withstand 500 V of repetitive electrical bursts per EN61000-4-4. Exposing the MCP to voltages higher than 500 V may cause the robot to shut down. In this event, it may be necessary to unplug, then reconnect, the MCP to restart the robot.

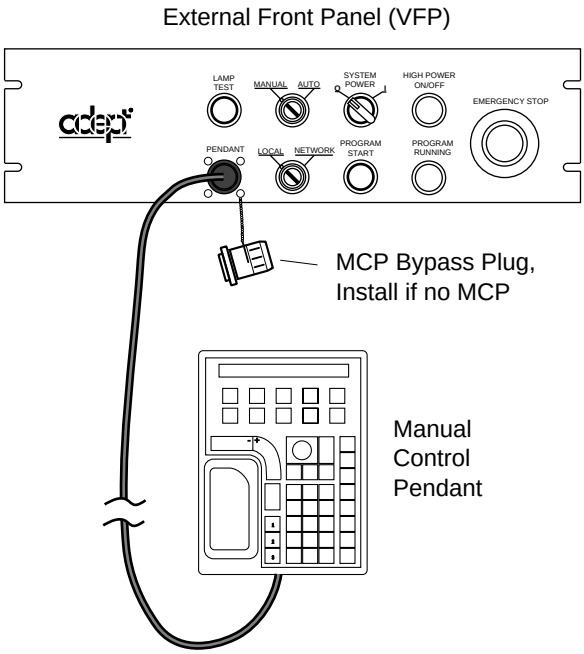

Figure 2-14. MCP Connection

MCP Cradle

The MCP is stored in the MCP cradle when it is not being held by an operator. The cradle has a retaining clip that keeps the Hold-to-Run switch closed. The MCP cradle *must* be installed outside of the robot workcell. See Figure 6-9 on page 90 for the dimensions of the cradle.

Artisan Technology Group - Quality Instrumentation ... Guaranteed | (888) 88-SOURCE | www.artisantg.com

2.15 Grounding Information

Adept MV Controller Grounding

The detachable three-wire power cord is used for connection to the power source and the protective ground. The protective ground conductor (colored green / yellow) in the power cord is internally connected to the exposed metal parts of the Adept MV Controller. To ensure electrical-shock protection, the protective ground conductor must be connected to a properly grounded power source.

Adept PA-4 Power Chassis Grounding

The protective ground conductor (colored green / yellow) of the Adept PA-4 Power Chassis is internally connected to the accessible metal parts of the power chassis. To ensure electrical-shock protection, this must be connected to a properly grounded power source, via the Security Panel.

WARNING: Ensure that a proper protective ground connection exists before turning on the power. The Adept PA-4 power chassis and the Adept MV controller must be connected to the same earth ground.

Adept Robot Grounding

The major parts of the robot are connected to the ground point on the base of the robot, see Figure 2-11. (See the next section for parts of the robot that are not grounded.) The user must install a ground wire at this point to ground the robot.

Robot-Mounted Equipment Grounding

The following parts of an Adept 550 robot are not grounded to protective earth: the Joint 3 quill, the user flange, and all access covers. If hazardous voltages are present at any user-supplied robot-mounted equipment or tooling, you must install a ground connection from that equipment / tooling to the ground point on the robot base (see Figure 2-11). Hazardous voltages can be considered anything in excess of 30VAC (42.4VAC peak) or 60VDC.

WARNING: Failing to ground robot-mounted equipment or tooling that uses hazardous voltages could lead to injury or death of a person touching the end-effector when an electrical fault condition exists.

Artisan Technology Group - Quality Instrumentation ... Guaranteed | (888) 88-SOURCE | www.artisantg.com

2.16 Connecting to AC Power

AC power must be connected separately to the Adept MV controller and the Adept PA-4 power chassis, but the power should come from the same source. See Figure 2-16 and Figure 2-17.

Connecting AC Power to the MV Controller

The Adept MV controller can operate at two different voltage settings. On the identification (ID) label you will find the model and serial numbers and the voltage and current ratings. The label is located on the left side of the controller chassis. A smaller serial number label is also located on the front of the chassis above the On/Off switch. You should always have this serial number available when you call Adept Customer Service for technical support.

The Adept MV-8 and MV-19 controllers operate at either 100-120 VAC or 200-240 VAC single phase. All controllers are shipped from the factory set to 200-240 VAC single phase. Contact Adept Customer Service for details on changing to 100-120 VAC configuration.

AC Power Requirements

Table 2-5. Adept MV Controller Power Requirements

Nominal Voltage Range	Frequency/ Phasing	Minimum Operating Voltage[a]	Maximum Operating Voltage	Recommended External Circuit Breaker (user-supplied)
200V to 240V (factory setting)	50-60Hz, 1-phase	180V	264V	10 amps
100V to 120V	50-60Hz, 1-phase	90V	132V	10 amps
Power to the Adept MV controller and PA-4 power chassis must come from a single source.				

[a] The maximum interruption time (operating voltage below specification) tolerated by the controller is 16 milliseconds.

Power Entry Module

The power entry module is located at the lower left side of the controller front panel. It contains:

- the On/Off power switch (**I** = On, **O** = Off)
- the AC power cord socket
- the two incoming AC line fuses

Artisan Technology Group - Quality Instrumentation ... Guaranteed | (888) 88-SOURCE | www.artisantg.com

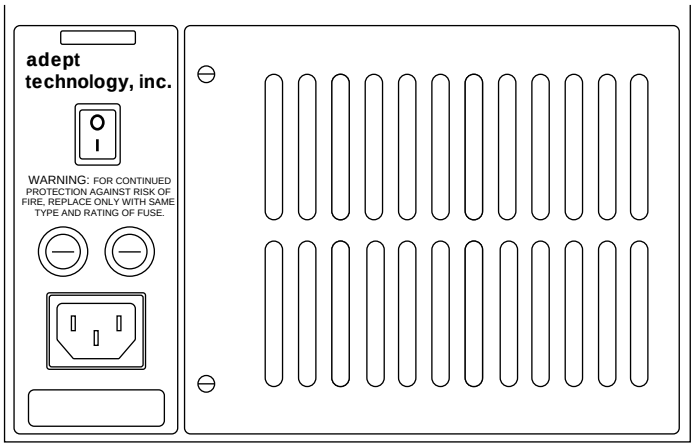

Figure 2-15. Adept MV Controller Power Entry Module

Connecting AC Power Cord

The AC power cord is included in the accessory kit. The controller end of the power cord is fitted with an IEC 320 connector. The user end of the cord is unterminated.

WARNING: Electrical hazard!

The installation of the power cord must be done by a skilled person. The power supply can injure or kill the person who installs the cord or an incorrect installation can injure or kill anybody who touches the equipment in the robot workcell.

Connect each conductor of the power cord securely to your AC power source, using the color code below. You must provide a suitable plug or other facility connection in accordance with all applicable European and national codes. See the section 2.15 on page 36 for important information on system grounding.

Table 2-6. Adept MV Controller Power Cord Specifications

Cord length	3 meters ±0.1 m (9 ft. 10 in. ±4 in.)
Cord rating	10 amps
Number and size of conductors	3 x 1.00 mm^2
Color code line neutral ground	 brown blue green / yellow

Artisan Technology Group - Quality Instrumentation ... Guaranteed | (888) 88-SOURCE | www.artisantg.com

Connecting AC Power to the Adept PA-4 Power Chassis

The Adept PA-4 power chassis provides amplified power signals to drive the robot motors in an Adept robot system. The amplifier modules in the Adept PA-4 power chassis receive control signals from the Adept MV controller. The amplifier modules then provide the necessary current to drive the various robot joint motors.

The Adept PA-4 power chassis is shipped from the factory configured for either 380-415 VAC or 200-240 VAC operation, depending on your sales order. A voltage setting label is located on the front of the chassis below the circuit breaker. The voltage setting is also shown on the ID label on the side of the chassis. Verify that the setting matches your facility power before installation. This chassis is designed for 3-phase operation only.

If you need to change the AC voltage setting from 380-415 VAC to 200-240 VAC, see page 42.

WARNING: Electrical hazard!
Verify the voltage settings are correct before turning on power. Operating the Adept PA-4 power chassis with incorrect voltage settings can cause damage or injury.

AC Power Requirements for Power Chassis

Table 2-7. Adept PA-4 Power Chassis Power Requirements

Nominal Voltage Range	Frequency/ Phasing	Minimum Operating Voltage	Maximum Operating Voltage	Recommended External Circuit Breaker (user-supplied)
380 to 415 VAC	50-60Hz, 3-phase with neutral	342 VAC	424 VAC	20 amps
200 to 240 VAC	50-60Hz, 3-phase	180 VAC	245 VAC	20 amps
Power to the Adept MV controller and PA-4 power chassis must come from a single source.				

Artisan Technology Group - Quality Instrumentation ... Guaranteed | (888) 88-SOURCE | www.artisantg.com

Connecting the Power Chassis AC Power Cord

The user end of the cord is unterminated. Connect each conductor of the power cord securely to your AC power source, using the color code shown in Table 2-8. The installation must meet all applicable European, international and national standards and regulations.

Table 2-8. AC Power Cord Specifications for Power Chassis

Cord length	3 meters ±0.1 m (9 ft. 10 in. ±4 in.)
Cord rating	25 amps
Number and size of conductor size	5 x 2.5 mm^2
Color code: 380 - 415 VAC	
line 1	black
line 2	black
line 3	brown
neutral	blue
ground	green / yellow
Color code: 200 - 240 VAC	
line 1	black
line 2	black
line 3	brown
no connection	**blue** (must be insulated, see page 42)
ground	green / yellow

WARNING: Electrical hazard!

The installation of the power cord must be done by a skilled person. The power supply can injure or kill the person who installs the cord or an incorrect installation can injure or kill anybody that touches the equipment in the robot workcell.

Artisan Technology Group - Quality Instrumentation ... Guaranteed | (888) 88-SOURCE | www.artisantg.com

Typical AC Power Installation Diagrams

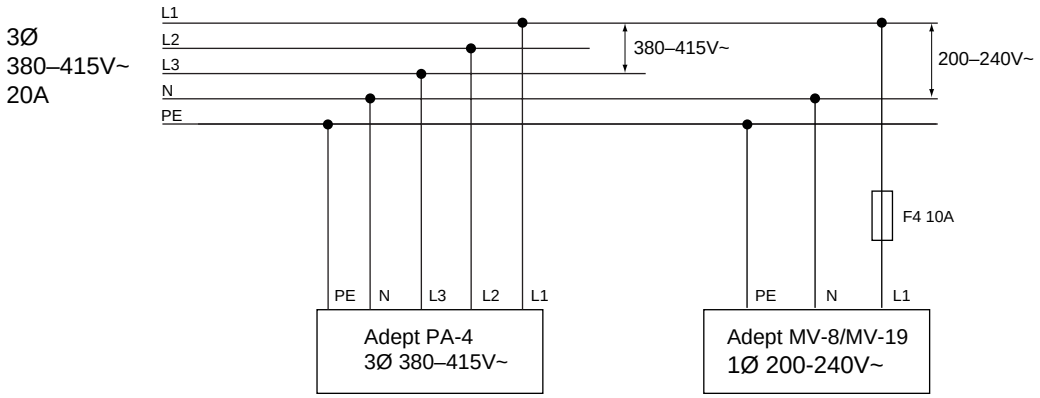

Note: F4 is user-supplied.

Figure 2-16. Typical 380-415 V AC Connection for Category 1 System

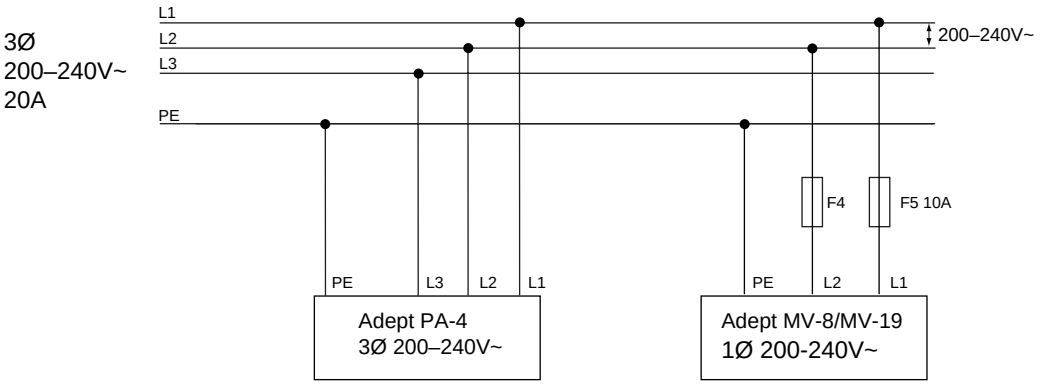

Note: F4 and F5 are user-supplied.

Figure 2-17. Typical 3-Phase 200-240 V AC Connection for Category 1 System

Artisan Technology Group - Quality Instrumentation ... Guaranteed | (888) 88-SOURCE | www.artisantg.com

Changing Voltage Setting for Power Chassis

If you need to change the AC voltage setting from 3-phase 380-415 VAC to 3-phase 200-240 VAC, you must follow the two-part procedure below. This procedure must be done only by a skilled person and should be performed before installing the power chassis.

WARNING: Electrical hazard!
Changing the voltage setting in the power chassis must be done by a skilled person. The power supply can injure or kill a person who does not perform this procedure correctly.

Part 1 – Insulating Blue Wire in Power Cord

1. Make sure the power chassis and controller are turned off.
2. Disconnect the 5-wire power chassis power cord from the AC power source.
3. Locate the two pieces of shrink tubing in the accessories kit; one is 7 mm (1/4 inch) diameter, the other is 19 mm (3/4 inch).
4. Place the 7 mm shrink tubing over the end of the blue wire in the power cord and use a heat gun to apply it. See Figure 2-18.
5. Fold the blue wire back and place the 19 mm shrink tubing over the end of the power cord. Use a heat gun to apply the shrink tubing.

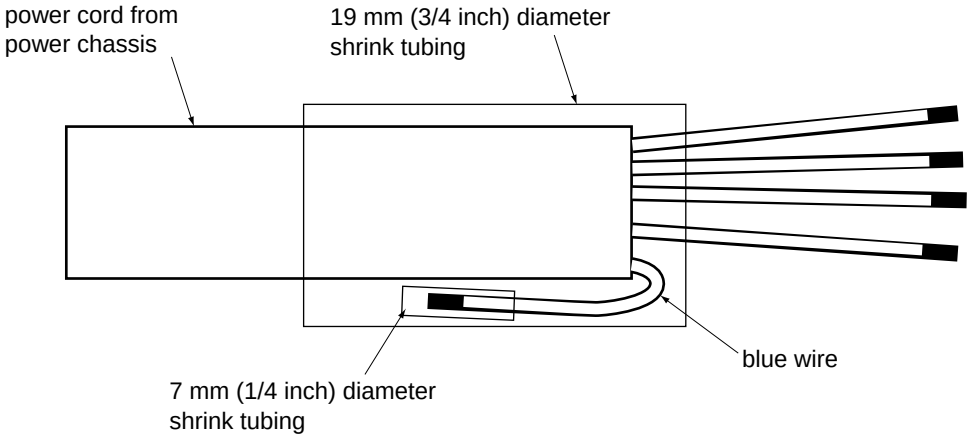

Figure 2-18. Insulating Blue Wire in Power Cord

Artisan Technology Group - Quality Instrumentation ... Guaranteed | (888) 88-SOURCE | www.artisantg.com

Part 2 – Rotating Voltage Selector in Power Chassis

1. Make sure the power chassis and controller are turned off.
2. Open the front air-intake grill by loosening two screws and swinging the grill out.
3. Inspect the voltage setting; it is marked on the front of the voltage selector plug. To change the voltage setting, remove the selector, rotate it 180° so the required setting is shown, and replace it. See Figure 2-19.
4. Close the grill and secure the two screws.
5. Clearly mark or alter the ID label (on the side of the chassis) to show the new voltage configuration.
6. Clearly mark or paste an alternative label over the existing label below the circuit breaker (on the front of the chassis) to show the new voltage configuration.
7. Re-connect the power chassis to the AC power source.

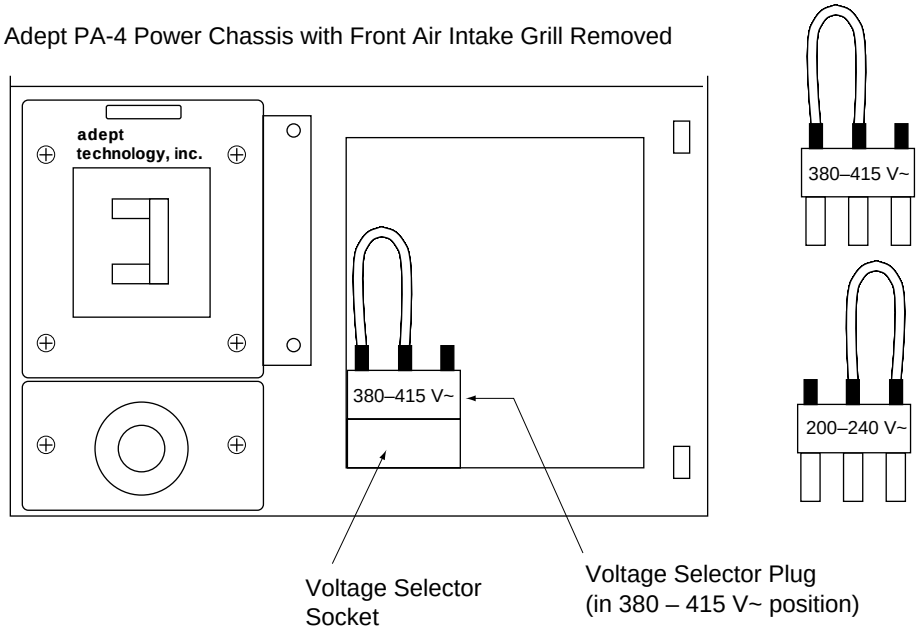

Figure 2-19. Changing Voltage in Power Chassis

Artisan Technology Group - Quality Instrumentation ... Guaranteed | (888) 88-SOURCE | www.artisantg.com

2.17 Additional Power Chassis Information

Overview of B+ Amplifier Module

The B+ Amplifier module is a plug-in module that contains the circuitry and amplifying components to drive two of the motors in an Adept 550 robot.

In a typical Adept 550 robot system, there are two identical B+ Amplifier modules in the Adept PA-4 power chassis. The amplifier module on the left-hand side, called Module 1, drives motors 1 and 3. The amplifier module on the right-hand side, called Module 2, drives motors 2 and 4.

Connectors and Indicators

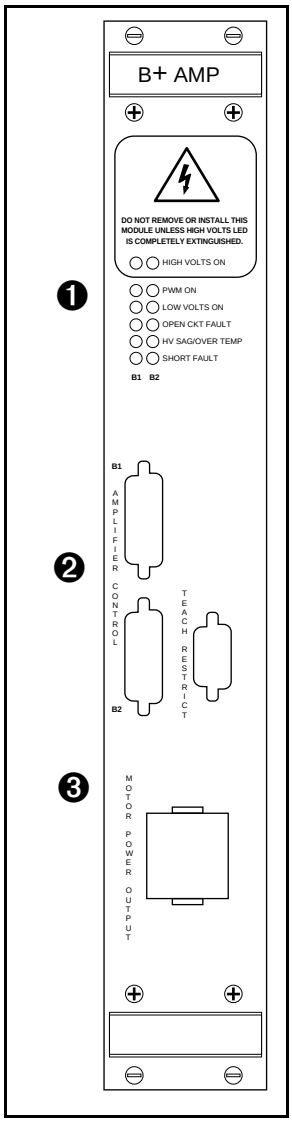

❶ Status LEDs. The left-hand column of LEDs is for the first motor controlled by this module; the right-hand column is for the second motor controlled by this module. When an LED is turned on it indicates the following conditions:

High Volts On indicates the high voltage to the amps is turned on.

PWM On indicates that current servo is on. It does not go on until calibration is complete.

Low Volts On indicates the low voltage supply in the power chassis is on.

Open Ckt Fault indicates that an open circuit in the motor leads has been detected.

HV Sag/Over Temp indicates that either the input voltage has dropped below the specified level or an over-temperature fault has been detected on an amplifier module.

Short Fault indicates that an over-current in the motor leads has been detected.

❷ **Amplifier Control** connector – the VJI-to-Amp cable connectors are installed here.

Note: the Teach Restrict connector is not used on an Adept 550 robot system.

❸ **Motor Power Output** connector – the Motor Power cable is installed here.

Artisan Technology Group - Quality Instrumentation ... Guaranteed | (888) 88-SOURCE | www.artisantg.com

Power Chassis Circuit Breaker and Fuse Information

Chassis Circuit Breaker

The power chassis circuit breaker is rated at 15A, and is located on the lower-left front of the chassis, on the power entry module. It also functions as an on/off switch to isolate the chassis.

CAUTION: If the circuit breaker trips due to current overload, it indicates an internal fault. Do not reset the circuit breaker yourself, contact Adept Customer Service at the numbers listed in Chapter 1.

Chassis Fuses

The six chassis fuses (F1 to F6) are located on the power control board. These fuses are not user-replaceable. If you suspect that a chassis fuse may have blown, contact Customer Service.

Amplifier Module Fuses

In addition to the fuses in the power chassis, there are additional fuses located inside the power amplifier modules. The amplifier fuses are not user-replaceable. If you suspect that an amplifier fuse may have blown, contact Customer Service.

CAUTION: Failure of an amplifier fuse indicates an internal circuit fault which must be corrected before the fuse is replaced. Do not attempt to replace the fuse yourself, contact Adept Customer Service at the numbers listed in Chapter 1.

Removing and Installing Amplifier Modules

The Adept PA-4 power chassis is shipped from the factory with the amplifier modules installed in the chassis. Any unused slots are filled with blank covers. Normally you will not need to remove the amplifier modules. If you do need to remove and re-install a module for some reason, follow the instructions below. The four slots in the chassis are not interchangeable, some slots have special control signals. The amplifier modules are factory-installed in the correct slots. Contact Adept Customer Service if you need to relocate any modules.

WARNING: Do not attempt to install or remove any amplifier modules without first turning off the power to the power chassis and all related external power supplies. Failure to observe this warning could cause injury or damage to your equipment.

Removing Amplifier Modules

1. Turn off the power chassis and the Adept MV controller.
2. Note the location of any cables connected to the module, then disconnect them.
3. Loosen the captive screws at the top and bottom of the module.
4. Using both the top handle and bottom handle, pull the module straight out of the chassis. Remove the module from the chassis and store it in a safe place.

Artisan Technology Group - Quality Instrumentation ... Guaranteed | (888) 88-SOURCE | www.artisantg.com

CAUTION: You must take precautions to prevent amplifier modules from being exposed to electro-static discharge (ESD) while you are handling or storing them. Adept recommends using an anti-static ground strap on your wrist when handling modules.

Installing Amplifier Modules

1. Turn off the power chassis and the Adept MV controller.
2. If the slot has a blank panel installed, loosen the captive screws at the top and bottom of the panel and remove it.
3. Verify that the intended slot for the module is ready to accept the module.
4. Align the module with the card guide slots at the top and bottom of the card cage. Slide the module in slowly. Apply straight-forward pressure to the top and bottom handles until it is firmly seated in the rear power connector, and the face of the module is flush with the other modules.

   It should not be necessary to use excess pressure or force to engage the connector. If the board does not properly connect with the rear power connector, remove the module and inspect the connector and guide slots for possible damage or obstructions.
5. Tighten the captive screws at the top and bottom of the module.

WARNING: There is an interlock circuit that prevents enabling power if the amp module screws are not tightened securely. This also applies to any blank panel cover(s). There are dangerous voltages present inside the power chassis, do not attempt to operate without blank panel cover(s) installed in any unused slots.

2.18 Installing End-Effectors on an Adept 550 Robot

The user is responsible for providing and installing any end-effector or other end-of-arm tooling. End-effectors can be attached to the user flange using either four M6 screws or a ring clamp; hardware for both are supplied in the accessories kit.

An M6 x 12 mm dowel pin is also supplied in the accessories kit. This dowel pin fits in the through hole in the user flange and can be used as a keying or anti-rotation device in a user-designed end-effector.

If hazardous voltages are present at the end-effector, you should install a ground connection from the base of the robot to the end-effector. See section 2.15 on page 36. Also see Chapter 6 for dimensions of the user flange.

Artisan Technology Group - Quality Instrumentation ... Guaranteed | (888) 88-SOURCE | www.artisantg.com

2.19 Removing and Installing the User Flange

The user flange can be removed and reinstalled if this is required for a specific reason. If the flange is removed, it must be reinstalled in exactly the same position to avoid losing the calibration for the system.

There is a setscrew on the flange that holds the rotational position of the flange on the quill shaft. A ball bearing behind the setscrew contacts the shaft in one of the vertical-spline grooves in the shaft. Follow the procedures below to remove and replace the flange assembly.

Removing the Flange

1. Turn off High Power and system power to the robot.
2. Remove any attached end-effectors or other tooling from the flange.
3. Use a 2.5 mm Allen driver to loosen the setscrew, see Figure 2-20. Note the vertical-spline groove that is in line with the setscrew. You must replace the flange in the same position.
4. Use a Torx 25 driver to loosen the two M5 Torx-head screws.
5. Slide the flange down slowly until it is off of the shaft. *Be careful* not to lose the ball bearing (3.5 mm) which is inside the flange behind the setscrew.

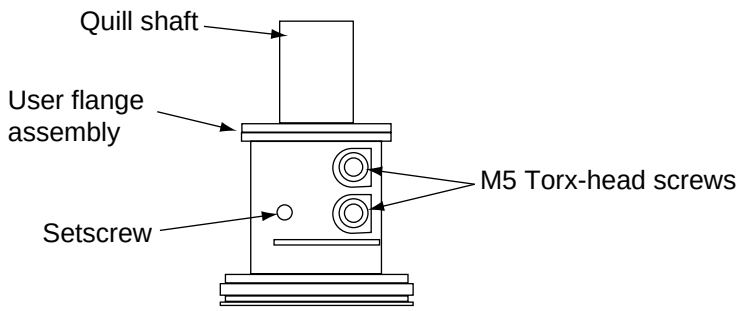

Figure 2-20. User Flange Removal Details

Installing the Flange

1. Make sure the ball bearing is in the setscrew hole inside the flange. Hold it in place with your finger as you get ready to install the flange.
2. Slide the flange up on the quill shaft as far as it will go, and rotate until the setscrew is lined up with the original vertical groove.
3. Support the flange while using a 2.5 mm Allen driver to tighten the setscrew to finger tight. Do not over-tighten the setscrew because this will cause the flange to be off-center from the quill shaft.
4. Use a Torx 25 driver to tighten one of the M5 Torx-head screws part of the way, then tighten the other one the same amount. Alternate between the two screws so there is even pressure on both once they are tight. The torque specification for each screw is 8 Nm (70 in-lb).

Artisan Technology Group - Quality Instrumentation ... Guaranteed | (888) 88-SOURCE | www.artisantg.com

2.20 User Connections on Robot

User Air Lines

There are five user air line connectors on the robot back panel (see Figure 2-11 on page 32). The five air lines run through the robot up to another set of five matching connectors on the top of the outer link.

The two larger connectors are 6 mm diameter.

The three smaller connectors are 4 mm diameter.

Thread size of connectors is M5.

User Electrical Lines

There is a 25-pin male connector on the back panel of the robot for user electrical lines. This connector is wired directly to a 25-pin female connector on the top of the outer link. These connectors can be used to run user electrical signals from the back panel, through the robot, and up to the outer link.

Wire size: 0.1 mm^2

Maximum current per line: 1 Amp

Artisan Technology Group - Quality Instrumentation ... Guaranteed | (888) 88-SOURCE | www.artisantg.com

Preparation for Safe and Effective Use of the Robot 3

3.1 Overview of Safety System 50

Introduction 50
Operating in Manual Mode 50
User-Supplied E-Stop Switches 50
Terminal Block On External Front Panel 51
External E-Stop Input 52
Passive E-Stop Output 52
Digital Inputs and Outputs of the System Input/Output (SIO) Module 53
Input Signals 53
Output Signals 54
Digital I/O Connector Pinouts 55
Typical Emergency Stop Circuitry 57

Artisan Technology Group - Quality Instrumentation ... Guaranteed | (888) 88-SOURCE | www.artisantg.com

3.1 Overview of Safety System

Introduction

Adept Technology highly recommends the use of workcell safety features such as light curtains, safety gates, or safety floor mats to prevent access to the workcell while power is present. These devices would open the E-Stop circuit and shut down High Power when activated. Make sure sufficient E-Stop switches are provided in the workcell, so they can be easily reached in an emergency.

It is possible to control different safety features in relation to the AUTO/MANUAL operating mode keyswitch and the terminal block on the external Front Panel. Together with the Adept Controller system, you have various control features to construct individual system safeguards, including:

- Terminal block on the external Front Panel
- Emergency stop circuitry
- Digital input and output lines

Operating in Manual Mode

An important function of the Emergency Stop system is to protect the operator in Manual mode. To work in Manual mode, the operator switches the lower keyswitch on the VFP to the LOCAL position and the operating mode keyswitch (upper one) to the MANUAL position. Then the operator gives the instruction to enable High Power, either through the ENABLE POWER software instruction, or pressing the COMP/PWR button on the MCP. The system starts the process to enable High Power. The steps are outlined in the following list.

High Power enable process in Manual mode (takes about 8 seconds):

- VFP HIGH POWER ON/OFF push button starts blinking*
- operator presses the VFP HIGH POWER ON/OFF button

  *The system waits until the HIGH POWER ON/OFF push button is pressed. If the button has not been pressed in a selected time, the system stops enabling power with an error message.

While in Manual mode, the robot speed is limited to 250 mm per second (10 ips). This is to protect a person who is in the workcell teaching points with the MCP during program development. Also, the motors run at reduced torque. It is important to remember that the robot speed is *not* limited when the robot is in Automatic mode.

User-Supplied E-Stop Switches

The specifications for user-supplied E-Stop and safety barrier switches are:

- switches with positive driven contacts, per EN60204 Section 10.73N1992
- minimum switching power 24 VA
- minimum switching voltage 24 VDC
- minimum switching current 1.0 A DC

Artisan Technology Group - Quality Instrumentation ... Guaranteed | (888) 88-SOURCE | www.artisantg.com

WARNING: Do not use switches in the E-Stop circuit that do not comply with Category 1 requirements.

See Table 3-1 for the terminal assignments of the terminal block on the external Front Panel for the monitoring of the Emergency Stop switches on the Manual Control Pendant and the external Front Panel, and the Hold-to-Run button on the MCP.

Terminal Block On External Front Panel

Adept provides voltage-free contacts on the terminal block on the back of the external Front Panel for monitoring the emergency circuitry components and other switches. It is a vital part of your safety system. You have access to voltage-free contacts of the Emergency Stop switches on the Manual Control Pendant and the external Front Panel. Additionally there are contacts for monitoring the Hold-to-Run switch on the MCP, the position of the System Power and Operating Mode switch on the external Front Panel. See Table 3-1 for assignment of the terminals.

The voltage-free contacts can be used to create additional safety circuitry or to monitor the existing one. For instance, you can control additional contactors with the voltage-free contacts that turn on and off the power supply to the PA-4 power chassis. Then it is only possible to enable High Power to the motors of the robot if the E-Stop circuitry is closed. See Figure 3-3 for an example of additional safety equipment that uses the voltage-free contacts on the external Front Panel and the external E-Stop Inputs on the SIO Module in the Adept MV Controller.

Table 3-1. Terminal Assignment of the Terminal Block on the Back of the VFP

Number	Description
1	System Power switch on the external Front Panel (contacts are closed when power is turned on)
2	
3	Operating Keyswitch on the external Front Panel (contacts are closed in Manual mode)
4	
5	Emergency Stop switch on the external Front Panel (N / C)
6	
7	Emergency Stop switch on the Manual Control Pendant (N / C)
8	
9	Hold-to-Run switch on the Manual Control Pendant (N / O)
10	
11	not used
12	not used

Artisan Technology Group - Quality Instrumentation ... Guaranteed | (888) 88-SOURCE | www.artisantg.com

External E-Stop Input

Pins 42 and 44 on the Digital I/O connector on the SIO module must be connected through a user-provided normally-closed (NC) safety circuit. Multiple external emergency stop switches can be connected in series. (See Figure 3-2.) The E-Stop circuit should also be used to monitor other safety-critical items, including but not limited to, safety barriers and encoder power supplies. Pins 41 and 43 also comprise part of the E-Stop circuit – for most applications, connect pin 41 to pin 43.

Passive E-Stop Output

The passive E-Stop output from the SIO module consists of a normally-open, voltage-free, relay contact. It is controlled by signals received from the external E-Stop devices and the MCP and Front Panel E-Stops. (See Figure 3-2.)

The passive E-Stop output uses only electro-mechanical relays to monitor the E-Stop circuits. Many safety codes do not permit electronic control of E-Stop signals, therefore the passive E-Stop output is often required to ensure that the user's equipment is shut down if the E-Stop circuit is activated. The Passive E-Stop output should also be used to control any other user devices in the workcell that need to be stopped in an emergency. Such devices might include other moving equipment such as conveyor belts, indexing or transfer devices, pneumatic systems, etc.

The passive E-Stop output is rated at 10 VA, for example 0.8A at 12Vdc or 0.4A at 24 Vdc. This rating must not be exceeded.

The specifications for the relay in the passive E-Stop circuit are:

- maximum switching power = 10 VA (volt amps)
- maximum switching voltage = 100 Volts DC, 70 Volts AC rms
- maximum switching current = 0.5 Amps DC, 0.3 Amps AC rms

CAUTION: The power through the relay must not exceed 10 VA.

Artisan Technology Group - Quality Instrumentation ... Guaranteed | (888) 88-SOURCE | www.artisantg.com

Digital Inputs and Outputs of the System Input/Output (SIO) Module

The Digital I/O connector on the SIO is a 50-pin, high-density, D-Sub female connector for digital I/O communication. There are 12 input channels and 8 output channels. All channels are opto-isolated. The same connector also provides access to the Emergency Stop circuit (E-Stop input and Passive E-Stop output). To access this connector, you will need a cable with a male 50-pin, D-Sub connector at one end (not supplied with the system.)

Input Signals

The digital I/O connector handles input signals 1001 to 1012. Each channel has an input and a corresponding return line. Refer to Table 3-2 for input specifications. The locations of the signals on the connector are shown in Table 3-4.

Table 3-2. DIO Input Specifications (SIO module)

Operational voltage range	0 to 24 VDC
"Off" state voltage range	0 to 3 VDC
"On" state voltage range	10 to 24 VDC
Typical threshold voltage	V_{in} = 8 VDC
Operational current range[a]	0 to 20 mA
"Off" state current range[a]	0 to 1.2 mA
"On" state current range[a]	7 to 20 mA
Typical threshold current, per channel[a]	10 mA
Impedance (V_{in}/I_{in})	1.3 KΩ minimum
Current at V_{in} = +24 VDC	I_{in} ≤20 mA
Turn on response time (hardware) Software scan rate/response time	5 µsec maximum 16 ms scan cycle/ 32 ms max response time[b]
Turn off response time (hardware) Software scan rate/response time	5 µsec maximum 16 ms scan cycle/ 32 ms max response time[b]

[a] the input current specifications are provided for reference; voltage sources are typically used to drive the inputs.

[b] 2 ms response time (minimum) for fast inputs 1001 to 1003, depending on program task configuration, when used with V^+ INT.EVENT instruction.

Artisan Technology Group - Quality Instrumentation ... Guaranteed | (888) 88-SOURCE | www.artisantg.com

Output Signals

The digital I/O connector handles output signals 0001 to 0008. Refer to Table 3-3 for output specifications. The locations of the signals on the connector are shown in Table 3-4. The SIO provides separate + and – connections for each channel (no internal common connections.) This allows you the choice to wire for current-sourcing or current-sinking mode as required.

Each output channel (circuit) should be connected to only one output device. Each output circuit is short-circuit protected.

Table 3-3. DIO Output Specifications (SIO module)

Operating voltage range	0 to 24 VDC
Operational current range, per channel	$I_{out} \leq 100$ mA
V_{drop} across output in on condition	$V_{drop} \leq 0.85$ V at 100 mA $V_{drop} \leq 0.80$ V at 10 mA
Output off leakage current	$I_{out} \leq 600$ µA
Turn on response time (hardware) Software scan rate/response time	3 µsec maximum 16 ms scan cycle/ 32 ms max response time
Turn off response time (hardware) Software scan rate/response time	200 µsec maximum 16 ms scan cycle/ 32 ms max response time

CAUTION: The above specifications for the digital inputs and outputs on the SIO module are different than the specifications for a DIO module. Specifically, the SIO output current is limited to 100 mA per channel, whereas the DIO output is rated at 400 mA.

Artisan Technology Group - Quality Instrumentation ... Guaranteed | (888) 88-SOURCE | www.artisantg.com

Digital I/O Connector Pinouts

Table 3-4. Digital I/O Connector Pin Assignments on SIO Module

Pin	Signal Name	Pin	Signal	Pin	Signal	Pin	Signal
1	Input 1001	2	1001 return	27	Output 0002+	28	Output 0002–
3	Input 1002	4	1002 return	29	Output 0003+	30	Output 0003–
5	Input 1003	6	1003 return	31	Output 0004+	32	Output 0004–
7	Input 1004	8	1004 return	33	Output 0005+	34	Output 0005–
9	Input 1005	10	1005 return	35	Output 0006+	36	Output 0006–
11	Input 1006	12	1006 return	37	Output 0007+	38	Output 0007–
13	Input 1007	14	1007 return	39	Output 0008+	40	Output 0008–
15	Input 1008	16	1008 return	41[a]	Auxiliary E-Stop input+	42[a]	External E-Stop input–
17	Input 1009	18	1009 return	43[a]	Auxiliary E-Stop input –	44[a]	External E-Stop input +
19	Input 1010	20	1010 return	45	Passive E-Stop output+	46	Passive E-Stop output–
21	Input 1011	22	1011 return	47	Not used	48	Not used
23	Input 1012	24	1012 return	49	Not used	50	Not used
25	Output 0001+	26	Output 0001–				

[a] Pins 41, 42, 43, and 44, see Figure 3-2 and Figure 3-3 for more information.

Artisan Technology Group - Quality Instrumentation ... Guaranteed | (888) 88-SOURCE | www.artisantg.com

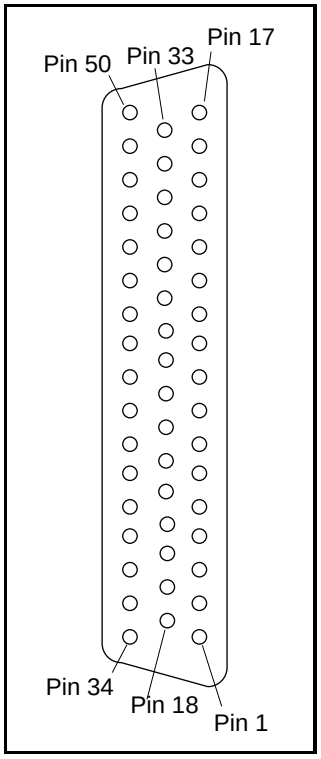

Figure 3-1. Digital I/O Connector Pin Locations on SIO Module

Artisan Technology Group - Quality Instrumentation ... Guaranteed | (888) 88-SOURCE | www.artisantg.com

Typical Emergency Stop Circuitry

The following drawings show two examples of different types of connections to the Emergency Stop circuitry.

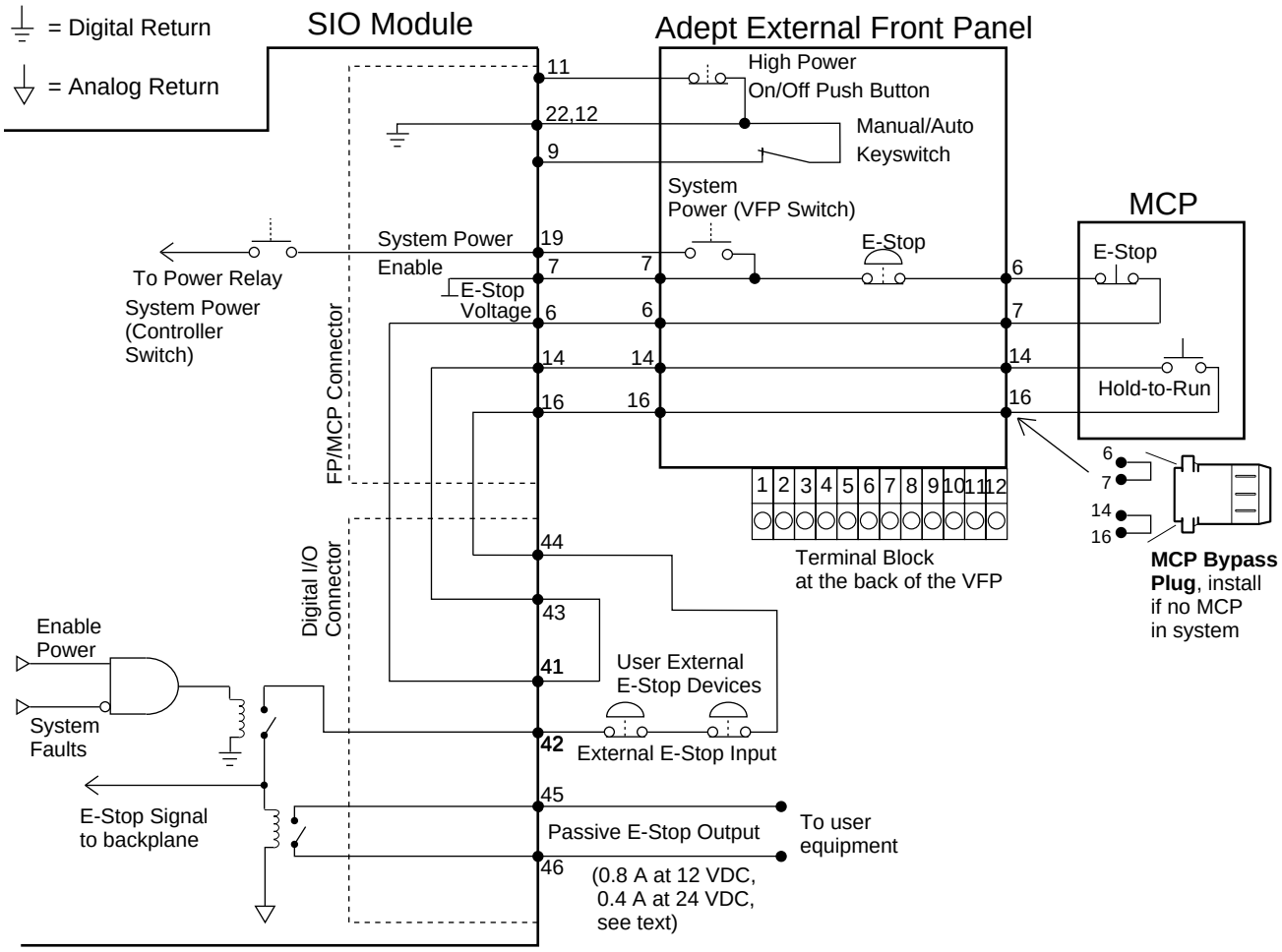

Figure 3-2. E-Stop Diagram with VFP and MCP

Artisan Technology Group - Quality Instrumentation ... Guaranteed | (888) 88-SOURCE | www.artisantg.com

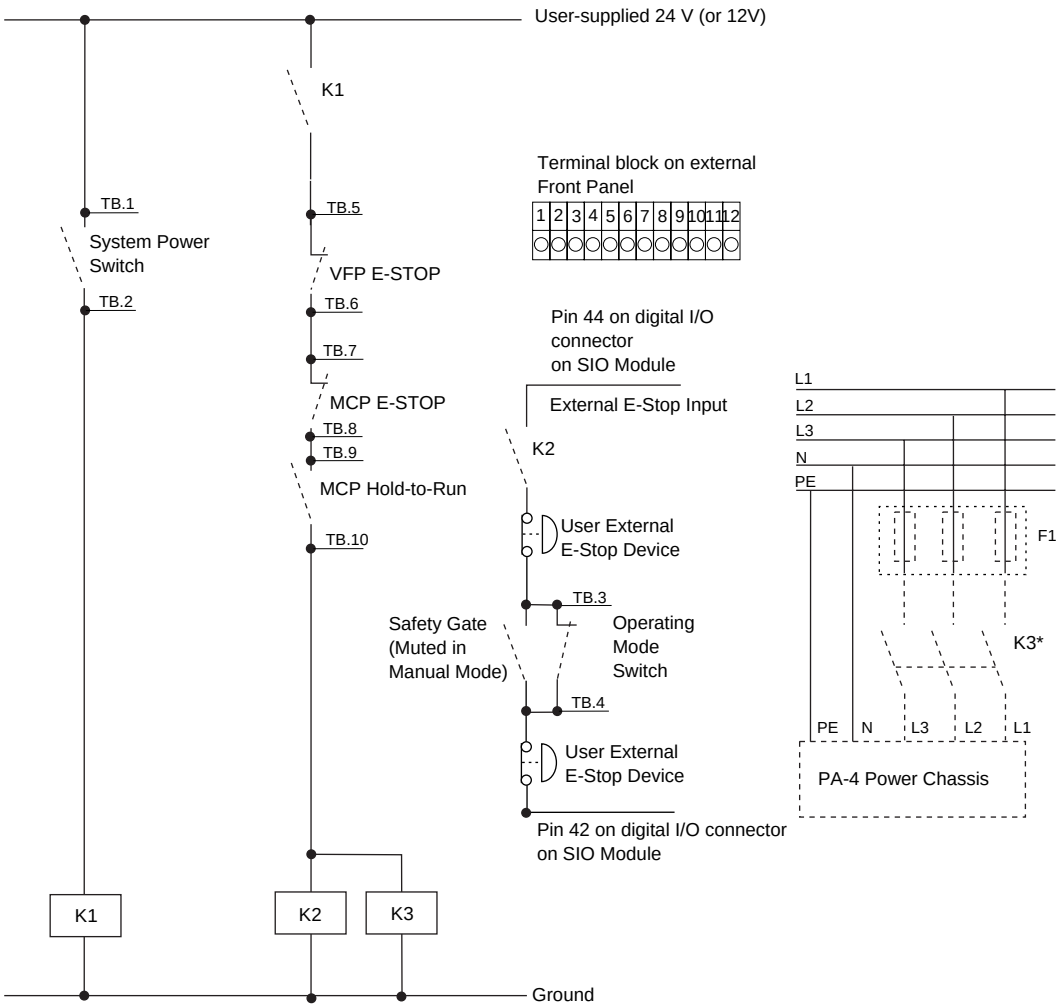

(*) The implementation of the K3 High Power contactor is not necessary to achieve Category 1 operation, per EN 954.

Note: This drawing is ONLY an example for the implementation of additional safeguards.

Figure 3-3. E-Stop Circuitry with Additional Safety Equipment

Artisan Technology Group - Quality Instrumentation ... Guaranteed | (888) 88-SOURCE | www.artisantg.com

Commissioning the System 4

4.1 Introduction 60

4.2 Check Of Physical Connections 60

Physical Connections 60

4.3 VFP Operating Modes. 60

Manual Operating Mode 60

Automatic Operating Mode 61

4.4 Using the Brake Release Button 62

Brakes 62

Brake Release Button. 62

4.5 Description of the Manual Control Pendant (MCP) 63

How to Hold the MCP 63

Description of Buttons on the MCP 64

Mode Control and Joint/Axis Control Buttons. 64

Speed Bars. 64

4.6 How to Stop a Robot in Manual Mode 65

4.7 How to Start the Robot 65

Enable High Power with the MCP 65

In Automatic Mode 65

In Manual Mode 66

Calibration of the Robot with the MCP. 66

4.8 Moving the Robot with the MCP 67

MAN/HALT Button for Selecting Joint State. 68

Joint/Axis Control Buttons. 68

Speed Bars. 68

Selecting Joint State and Moving the Robot 69

Selecting and Moving Joint 1 70

Selecting and Moving Joint 2 70

Selecting and Moving Joint 3 70

Selecting and Moving Joint 4 70

4.9 Limiting Joint Travel. 71

Softstops 71

Hardstops 71

Artisan Technology Group - Quality Instrumentation ... Guaranteed | (888) 88-SOURCE | www.artisantg.com

4.1 Introduction

This chapter covers commissioning, or putting into service, the Adept robot system. This includes verifying that the installation is complete, starting and stopping the robot, and how to move the robot with the MCP.

4.2 Check Of Physical Connections

Physical Connections

Before turning on the controller and enabling High Power, make sure that all cables from

- robot to power chassis,
- robot to controller,
- controller to power chassis,
- VFP to controller and MCP

are installed correctly. See Chapter 2 for installation instructions.

CAUTION: Ensure that all screws holding the amp modules and blank panels in the power chassis are securely fastened. If they are loose, power to the robot cannot be enabled.

Make sure that the controller is connected to the correct AC power source. See Chapter 2 for details about the power requirements of the devices. Also make sure you have installed proper safeguards and E-Stop circuits as described in Chapter 1 and Chapter 3.

4.3 VFP Operating Modes

Adept robots have two different operating modes.The VFP incorporates a 2-position rotary keyswitch marked MANUAL and AUTO that controls whether the robot is operating in Manual or Automatic mode. For safety reasons, High Power is automatically disabled when the operating mode is changed.

Manual Operating Mode

In the MANUAL position of the keyswitch, robot motion can be initiated only from the Manual Control Pendant (MCP). In Manual mode it is not possible to initiate a motion with the system keyboard. This protects the operator in the workcell for unexpected motions of the robot.

In Manual mode the maximum speed of the Tool Center Point and the joints of the robot is reduced to 250 mm per second (10 ips). Also, the motors run at reduced torque.

Artisan Technology Group - Quality Instrumentation ... Guaranteed | (888) 88-SOURCE | www.artisantg.com

See section 1.11 on page 11 for a description of safety equipment to be worn by an operator who is working in the robot workcell.

Automatic Operating Mode

The AUTO position of the operating keyswitch permits computer control of the robot. A program that is currently running the robot or motion device may cause it to move at times or along paths you may not anticipate. When the amber HIGH POWER light and the white PROGRAM RUNNING light on the VFP are illuminated, do not enter the workcell because the robot or motion device might move unexpectedly.

WARNING: Impact Hazard!
In Automatic mode no personnel are allowed to stay in the workcell. The robot can move at high speeds and exert considerable forces.

CAUTION: The LAMP TEST button on the VFP allows you to check the HIGH POWER light and the PROGRAM RUNNING light on the VFP. Adept recommends checking the two lights periodically, prior to entry into the workcell.

NOTE: The MCP can be used in Automatic (COMP) and in Manual (MAN) mode. For example, it is possible to calibrate the robot, or to enable High Power with the MCP in Automatic mode.

Artisan Technology Group - Quality Instrumentation ... Guaranteed | (888) 88-SOURCE | www.artisantg.com

4.4 Using the Brake Release Button

Brakes

Joints 1, 2, and 4 have dynamic brakes that are used only to stop the robot in an emergency condition, such as when the emergency stop circuit is open or a robot joint passes its soft-stop. These brakes will not prevent you from moving the robot manually once the robot has stopped (and High Power has been removed).

Joint 3 has an electric brake. The brake is off when high power is enabled. When High Power is turned off, the brake actuates and holds the position of Joint 3.

Brake Release Button

Under some circumstances you may want to manually position Joint 3 without turning on High Power. For such instances, a Brake Release button is located on the robot backplate (see Figure 2-11 on page 32). When system power is on, pressing the button releases the brake, which allows movement of Joint 3.

If this button is pressed while High Power is on, High Power will automatically shut down.

CAUTION: When the Brake Release button is pressed, Joint 3 may drop to the bottom of its travel. To prevent possible damage to the equipment, make sure that Joint 3 is supported while releasing the brake and verify that the end effector or other installed tooling is clear of all obstructions.

Artisan Technology Group - Quality Instrumentation ... Guaranteed | (888) 88-SOURCE | www.artisantg.com

4.5 Description of the Manual Control Pendant (MCP)

The MCP assists the operator in teaching robot locations to be used in application programs. The MCP is also used with custom applications that employ “teach routines.” These routines pause execution at specified points and allow an operator to teach or re-teach the robot locations used by the program. The Adept AIM software system makes extensive use of the pendant for teaching robot locations.

A description of the basic operations with the MCP, such as enabling High Power, calibration, and moving the robot, follows in the next sections.

How to Hold the MCP

The pendant has a palm-activated Hold-toRun switch that is connected to the emergency stop circuitry. Whenever this switch is released, High Power is turned off. To operate the MCP, put your left hand through the opening on the left-hand side of the pendant and use your left thumb to operate the pendant speed bars. Use your right hand for all the other function buttons.

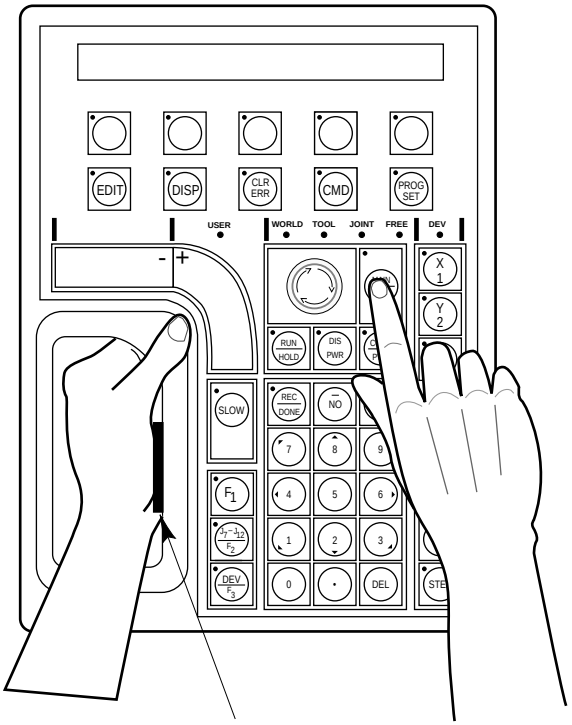

Figure 4-1. Holding the MCP

NOTE: The MCP must be stored in the MCP cradle to close the Hold-to-Run switch when it is not being held.

Artisan Technology Group - Quality Instrumentation ... Guaranteed | (888) 88-SOURCE | www.artisantg.com

Description of Buttons on the MCP

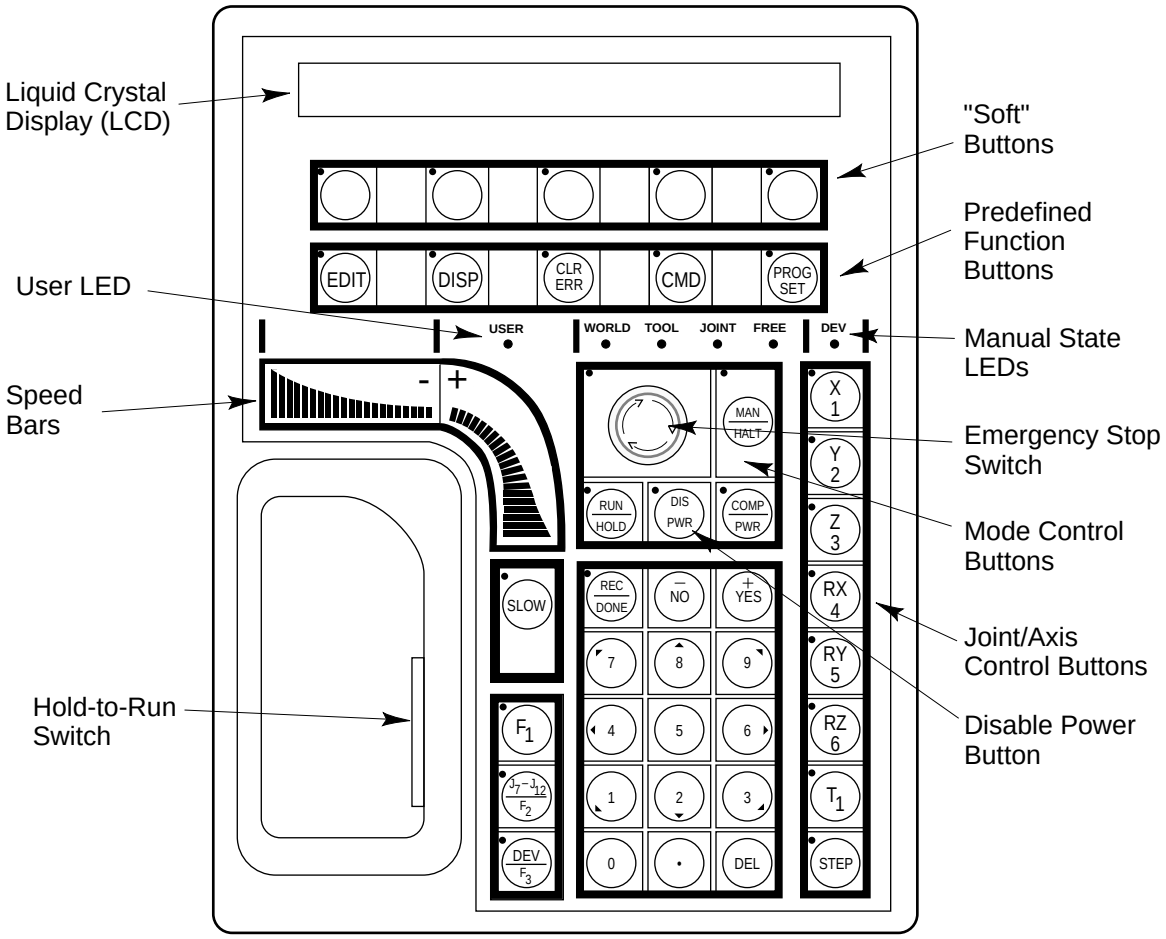

Figure 4-2. MCP Layout

Mode Control and Joint/Axis Control Buttons

The mode control and joint/axis control buttons are used to control the robot from the pendant.

Speed Bars

The speed bars and slow button are used primarily to move the robot when it is in MCP Manual mode.

NOTE: The Step button on the lower right corner of the MCP is used to step through motions in a V^+ program. See the *V^+ 11.3 Release Notes* for details.

Artisan Technology Group - Quality Instrumentation ... Guaranteed | (888) 88-SOURCE | www.artisantg.com

4.6 How to Stop a Robot in Manual Mode

There are several ways to stop the motion of a robot. The fastest way to stop the motion of a robot is to press an Emergency-Stop button. The robot will stop its motion immediately. Use a Emergency-Stop button only in emergency situations. The normal way is to press the DIS PWR button on the MCP or to release the speed bars on the MCP. The robot will stop after the actual motion.

Ways to stop the motion of a robot:

- Press the Emergency-Stop button on the MCP or another Emergency-Stop button, but only in emergency situations.
- Release the Hold-to-Run switch to shut off High Power.
- Release the Speed Bars on the MCP.
- Press the DIS PWR (Disable Power) button on the MCP.
- Press the HIGH POWER ON / OFF button on the VFP.

CAUTION: Press an Emergency-Stop button or release the Hold-to-Run switch only in emergency situations. In normal operations, stop the robot by releasing the speed bars or pressing the Disable Power button.

4.7 How to Start the Robot

Before a robot motion can be initiated, High Power must be turned on and the robot must be calibrated.

Enable High Power with the MCP

In Automatic Mode

Follow the steps to enable High Power in Automatic mode with the MCP:

NOTE: If High Power is on and you release the Hold-to-Run switch on the MCP, the system recognizes an emergency stop signal and will turn off High Power immediately.

1. Turn on the power switches on the controller and the power chassis.
2. Set the VFP System Power switch into the position I, to turn on system power.
3. Verify that all Emergency-Stop switches are pulled out and all access doors to the workcell are closed.

WARNING: Impact Hazard!
In Automatic mode no personnel are allowed to enter or stay in the workcell. The robot can move at high speeds and exert considerable force.

4. Set operating keyswitch to AUTO and the other keyswitch to LOCAL.

Artisan Technology Group - Quality Instrumentation ... Guaranteed | (888) 88-SOURCE | www.artisantg.com

5. Press the "COMP/PWR" button on the MCP.
6. Press the blinking "HIGH POWER ON/OFF" button on the VFP.

   NOTE: In Automatic mode the V^+ operating system may take approximately 8 seconds to complete the High Power sequence.

In Manual Mode

Follow the steps to enable High Power in Manual mode with the MCP:

NOTE: If High Power is on and you release the Hold-to-Run switch on the MCP, the system recognizes an emergency stop signal and will turn off High Power immediately.

1. Turn on the power switches on the controller and the power chassis.
2. Set the VFP System Power switch into the position I, to turn on system power.
3. Verify that all Emergency-Stop switches are pulled out and all access doors to the workcell are closed.
4. Set operating keyswitch to MANUAL and the other keyswitch to LOCAL. For added safety, remove the keys from the keyswitches.
5. Press the "COMP/PWR" button on the MCP.
6. Press the blinking "HIGH POWER ON/OFF" button on the VFP.

   NOTE: In Manual mode the V^+ operating system may take approximately 8 seconds to complete the High Power sequence.

To re-enable High Power after pressing the MCP emergency stop button, turn the emergency stop button to the right (clockwise). The switch is spring loaded and will return to its normal position. Depress the Hold-to-Run switch. High Power can now be re-enabled by pressing the COMP/PWR button (mode control group) and the HIGH POWER ON/OFF push button on the VFP.

Calibration of the Robot with the MCP

The robot can be calibrated only when High Power is enabled and Automatic mode is selected. If the robot is in Manual mode, you must switch to Automatic mode. After changing the operating mode, the controller shuts off High Power automatically. See the instructions above to enable High Power again.

WARNING: Impact Hazard!
In Automatic mode no personnel are allowed to enter or stay in the workcell. The robot can move at high speeds and exert considerable forces. Calibration involves limited robot motion. Observe all safety precautions.

Artisan Technology Group - Quality Instrumentation ... Guaranteed | (888) 88-SOURCE | www.artisantg.com

1. Set the VFP operating keyswitch to the AUTO position and verify that the other keyswitch is in the LOCAL position. If necessary, re-enable High Power.
2. Press the CMD soft button to display functions.

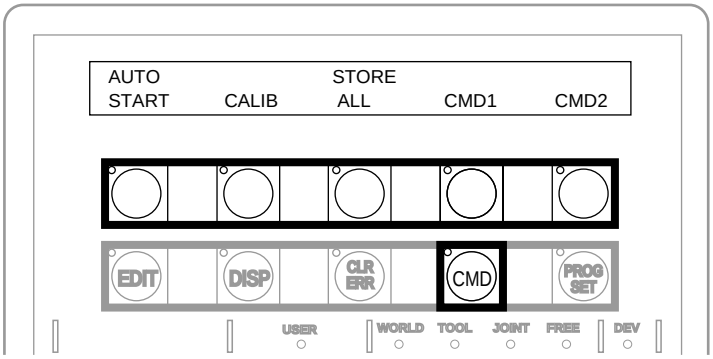

Figure 4-3. Command (CMD) Function Button

3. Press the soft button below the text CALIB in the display to start calibration.

Once the robot is calibrated you can move the robot. If High Power is turned off after calibration is complete, you have to Enable Power again, but you do not have to calibrate. If system power is turned off at the VFP, then you must Enable Power and Calibrate.

4.8 Moving the Robot with the MCP

This section describes how to use the MCP to move the robot. Follow the steps on page 65 to enable High Power and to calibrate the robot. Do *not* enter the workcell. Leave the operating keyswitch in the AUTO position. Make sure that all access doors are closed and no person is in the workcell. Press the MAN / HALT button on the MCP to select the MCP Manual mode, then see the following descriptions.

WARNING: Impact Hazard!
Only a skilled or instructed robot operator (see Section 1.9 on page 10) wearing the safety equipment given in Section 1.11 on page 11 is allowed to work with the robot.

Artisan Technology Group - Quality Instrumentation ... Guaranteed | (888) 88-SOURCE | www.artisantg.com

MAN/HALT Button for Selecting Joint State

The MAN/HALT button changes the state being used to move the robot.

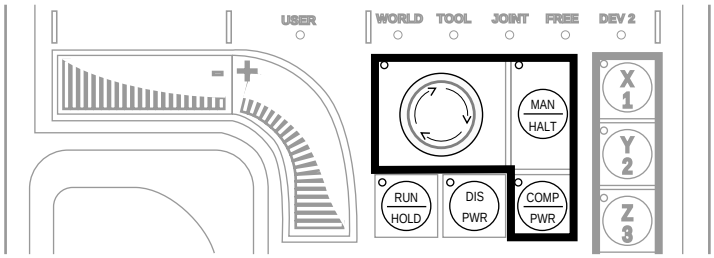

Figure 4-4. Mode Control Buttons

The system will remain in MCP Manual mode until High Power is turned off, or the COMP/PWR button is pressed.

When the MAN/HALT button is pressed the first time, the MCP will be in World state. Pressing the MAN/HALT button again selects the next state to the right (Tool, Joint, or Free), eventually wrapping back to the left-most state (World). If MCP Manual mode is terminated and re-entered (without turning off system power) the last active state is selected.

Joint/Axis Control Buttons

The buttons on the far right side are the Joint/Axis control buttons, see Figure 4-2 on page 64. When the controller is in Manual mode, these buttons select which robot joint will move, or the coordinate axis along which the robot will move.

Speed Bars

The speed bars are used to control the robot's speed and direction. The joint(s) that will move when the speed bars are pressed depends on the "state" selected with the MAN/HALT button. Press the speed bars with your left thumb. Pressing the speed bars near the outer ends will move the robot faster, pressing the speed bar near the center will move the robot slower. The maximum speed of the robot in Manual mode is 250 mm per second (10 ips).

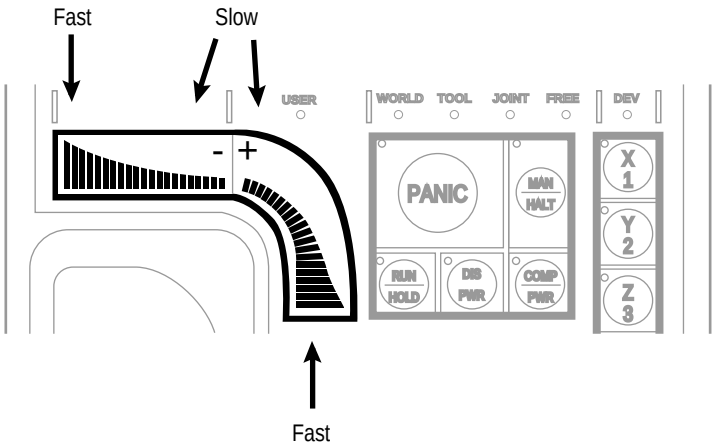

Figure 4-5. Speed Bars

Artisan Technology Group - Quality Instrumentation ... Guaranteed | (888) 88-SOURCE | www.artisantg.com

Selecting Joint State and Moving the Robot

Figure 4-6 shows a typical Adept SCARA robot with three rotational joints (Joints 1, 2, and 4) and one translational joint (Joint 3). Positive rotation of Joints 1 and 2 is counter-clockwise as viewed from above. Positive rotation of Joint 4 is clockwise as viewed from above. Positive movement of Joint 3 is downward. Before the speed bars will move a joint, the correct joint must be selected from the Joint / Axis control buttons.

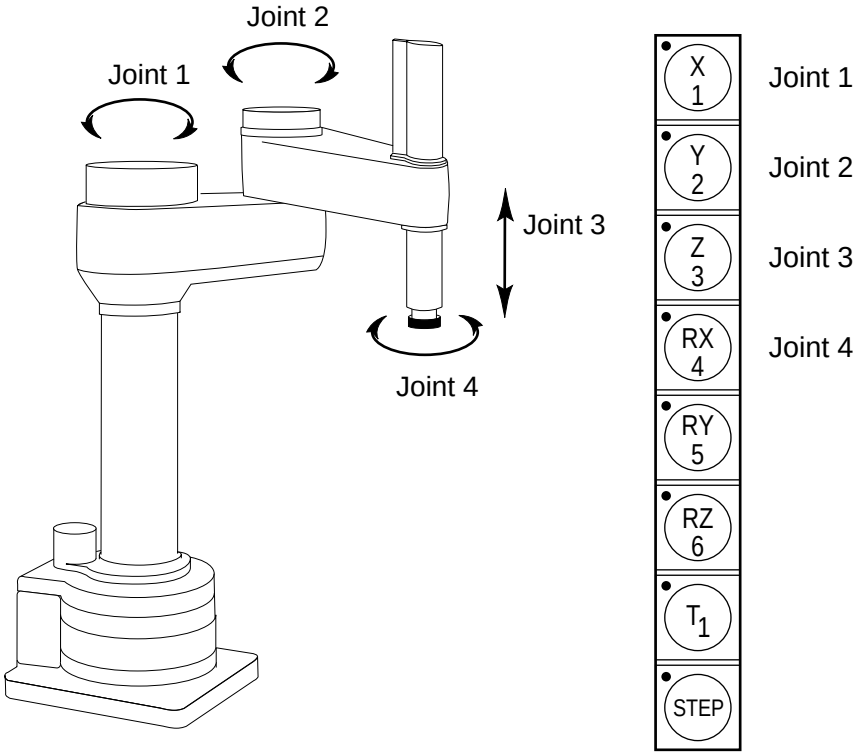

Figure 4-6. Joint State (SCARA)

In Joint State, only the selected joint moves. After the calibration of the robot, switching into Manual mode and re-enabling High Power, you must select the joint mode.

1. Press the MAN / HALT button to enable the MCP.

   The MCP is in the correct mode when:

   a. The LED on the MAN / HALT button is illuminated. If it is not illuminated press the MAN / HALT button.

   b. One of the manual state LEDs is also illuminated (the “Manual state” LEDs indicate the type of manual motion that has been selected, either World, Tool, Joint, or Free).

2. Press the MAN / HALT button (see Figure 4-4) several times until the JOINT LED is illuminated.

When the LED on the MAN / HALT button and the JOINT LED are lit, Joint state is selected and movement of a specified joint must be selected.

Artisan Technology Group - Quality Instrumentation ... Guaranteed | (888) 88-SOURCE | www.artisantg.com

Selecting and Moving Joint 1

Before you can move Joint 1, you must select it with the MCP. On the right side of Figure 4-6 you can see the buttons for selecting a joint in the Joint State. After pressing the X1 button that selects Joint 1, the LED on the button will turn on. Then you can move the robot with the speed bars.

> **NOTE:** The operator must keep pressing the Hold-to-Run button to retain High Power while working with the robot.

Press the positive speed bar until the robot starts moving. When it moves in one direction stop pressing the speed bar. Then press the minus speed bar and watch the robot. It must now move into the opposite direction. After you verified that the robot can move in both directions, you can release the speedbar.

Selecting and Moving Joint 2

Press the Y2 button on the MCP to select Joint 2. After pressing the Y2 button the LED on it will turn on. The robot is ready to move Joint 2.

Press the positive speed bar until the robot starts moving Joint 2. When it moves stop pressing the speed bar. Then press the negative speed bar and watch the robot. It must move into the opposite direction. After you verified that the robot can move in both directions, you can release the speedbar.

Selecting and Moving Joint 3

Press the Z3 button on the MCP to select Joint 3. After pressing the Z3 button the LED on it will turn on. The robot is ready to move Joint 3.

Press the positive speed bar. The robot quill must move in the direction of the floor. If you verified that the robot follows the instruction, then press the minus speed bar and check if the quill moves into the opposite direction.

Selecting and Moving Joint 4

Press the RX4 button on the MCP to select Joint 4. After pressing the RX4 button the LED on it will turn on. The robot is ready to move Joint 4.

Press the positive speed bar until the robot starts moving. When it moves, stop pressing the speed bar. Then press the minus speed bar and watch the robot. It must move into the opposite direction. After you verified that the robot can move in both directions you can release the speedbar.

If every joint the robot moved correctly in both directions the installation of the hardware is correct. Then press the DIS/PWR button on the MCP to disable High Power.

Artisan Technology Group - Quality Instrumentation ... Guaranteed | (888) 88-SOURCE | www.artisantg.com

4.9 Limiting Joint Travel

The joint motion range, or travel, is limited by both software and hardware. The programmable software limits are known as *softstops*. The fixed mechanical stops are called *hardstops*.

Softstops

Softstops are used when the normal motion range of the robot must be limited (if other equipment is installed inside the envelope, for example). The softstops for each joint are set to their maximum value at the factory. To limit any joint's motion range, change the joint's softstop value using the SPEC utility program (formerly CONFIG_R) on the Adept Utility Disk supplied with the system. Refer to the *Instructions for Adept Utility Programs* for information regarding this utility program.

When you are using the MCP to move the robot, the robot will stop abruptly when it encounters a softstop. This abruptness does not mean a hardstop has been contacted.

Hardstops

Joints 1, 2, and 3 have hardstops at each end of the joint's travel.

Joint 4 does not have hardstops. However, its motion is limited by software, and its softstops can be set to further limit Joint 4 motion (see above).

> **NOTE:** Joint 4 can be rotated an infinite number of turns. To avoid wind-up of harnesses going to end-of-arm tooling, Joint 4 should always be left at +/– 90 degrees (in joint coordinates) when powering down the controller. This ensures that when the system is next powered on and the robot is recalibrated, it calibrates in the same Joint 4 orientation, without winding up user harnesses.

Table 4-1. Softstop and Hardstop Specifications

	Softstop	Hardstop – Approximate
Joint 1	±100°	±108°
Joint 2	±140°	±149°
Joint 3	0 to 200 mm	–13 to 213 mm
CleanRoom Joint 3	0 to 180 mm	–13 to 195 mm
Joint 4	±360° max	None

Artisan Technology Group - Quality Instrumentation ... Guaranteed | (888) 88-SOURCE | www.artisantg.com

Artisan Technology Group - Quality Instrumentation ... Guaranteed | (888) 88-SOURCE | www.artisantg.com

Maintenance 5

5.1 Introduction 74

5.2 Checking Robot Mounting Bolts and Leveling 74

5.3 Lubricate Joint 3 Ball Screw 75

5.4 Check Tension and Wear On J3 and J4 Drive Belts 76

5.5 Maintenance and Inspection of Air Filters 79

Adept PA-4 Fan Filter Inspection and Cleaning 79

Adept MV Controller Fan Filter Inspection and Cleaning 79

5.6 Check Lamps on VFP 79

Artisan Technology Group - Quality Instrumentation ... Guaranteed | (888) 88-SOURCE | www.artisantg.com

5.1 Introduction

See Table 5-1 for a summary of the preventive maintenance procedures and guidelines on frequency.

Table 5-1. Inspection and Maintenance

Item	Period	Reference
Check robot mounting bolts	6 months	See section 5.2.
Check leveling of base	6 months	See section 5.2.
Lubricate Joint 3 (Z-axis) ball screw	3 months	See section 5.3.
Check tension of Joint 3 (Z-axis) drive belt	3 months	See section 5.4.
Check tension of Joint 4 drive belt	3 months	See section 5.4.
Check air filter in PA-4 power chassis	1 month	See section 5.5.
Check lamps on VFP using Lamp Test button	1 month	See section 5.6.

NOTE: The frequency of these procedures will depend on the particular system, its operating environment, and amount of usage. Use the times in Table 5-1 as guidelines and modify the schedule as needed.

WARNING: The procedures and replacement of parts mentioned in this section should only be performed by skilled or instructed persons, as defined in section 1.9 on page 10. The access covers on the robot are not interlocked – turn off disconnect power if covers have to be removed.

5.2 Checking Robot Mounting Bolts and Leveling

Check the tightness of the base mounting bolts every 6 months. Tighten to 85 Nm (50 ft-lb). Also check the tightness of all cover plate screws and all the captive screws of the cables.

Check the leveling of the base every 6 months.

Artisan Technology Group - Quality Instrumentation ... Guaranteed | (888) 88-SOURCE | www.artisantg.com

5.3 Lubricate Joint 3 Ball Screw

Use Marutemp SRL grease (Adept part number 60554-00070) to lubricate the Joint 3 ball screw.

Procedure

1. Turn off main power to the controller and power chassis.
2. Remove the Joint 3 cover by removing two nuts (using an 8 mm socket) on the top of the cover and lifting the cover up and off. See Figure 5-1.
3. Move Joint 3 to the top of its travel. Remove any existing grease with a soft cloth.
4. Apply a thin film of grease to the surface of the length of the ball screw.
5. Move Joint 3 to the bottom of its travel. Remove any existing grease with a clean, lint-free, soft cloth.
6. Apply a thin film of grease to any surface of the ball screw that you did not reach in step 4.
7. Move Joint 3 up and down several times to spread the grease evenly.
8. Replace the Joint 3 cover.

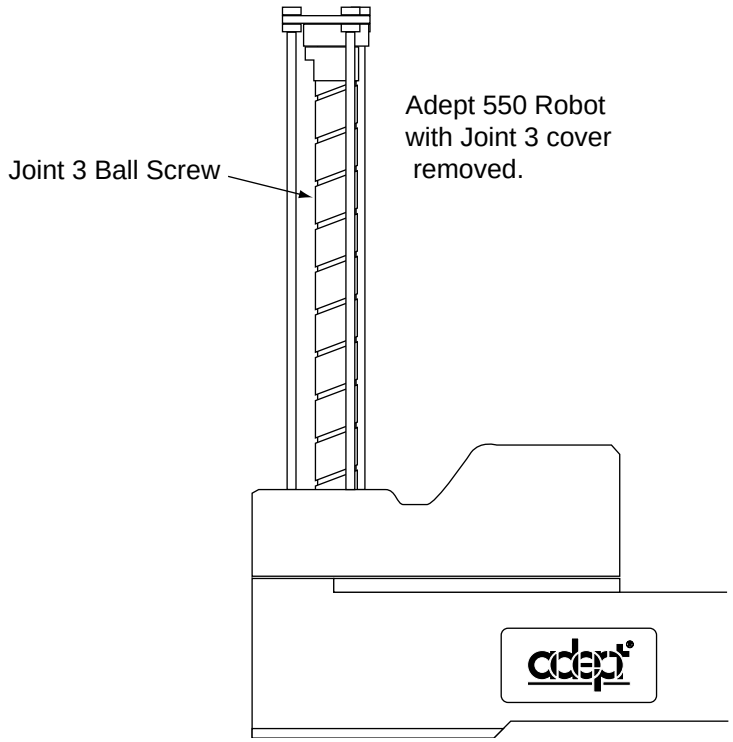

Figure 5-1. Lubrication of Joint 3 Ball Screw

Artisan Technology Group - Quality Instrumentation ... Guaranteed | (888) 88-SOURCE | www.artisantg.com

5.4 Check Tension and Wear On J3 and J4 Drive Belts

Check the tension and wear on the Joint 3 and Joint 4 drive belts every 3 months.

1. Turn off main power to the controller.
2. Remove the access cover by loosening four screws (using 2.5 mm hex wrench) on the under side of the outer link. See Figure 5-2. Note the path of the cable that runs along the side of the opening so that you can route it the same way at the end of this procedure.
3. Drop the Joint 3 brake assembly out of the way by removing 4 M3 x 8 screws (using 2.5 mm hex wrench) and lowering the assembly. This makes it much easier to access the drive belts.

   NOTE: Be careful not to lose the four spacers that are between the brake assembly and the outer link assembly. See Figure 5-4. These spacers are necessary to ensure that the brake is aligned properly with the Joint 3 drive pulley.

4. Check the tension of the Joint 3 and Joint 4 drive belts with your fingers. See Figure 5-3. The belts should feel tight to the touch. If there is any noticeable looseness, call Adept Customer Service.
5. Inspect up in the drive belt area with a flashlight to look for signs of excess wear from the drive belts. A small amount of residue or dust from the belts is normal. Any larger particles that may indicate worn or broken teeth on the drive belts could be a problem. Call Adept Customer Service if you discover anything that looks unusual.

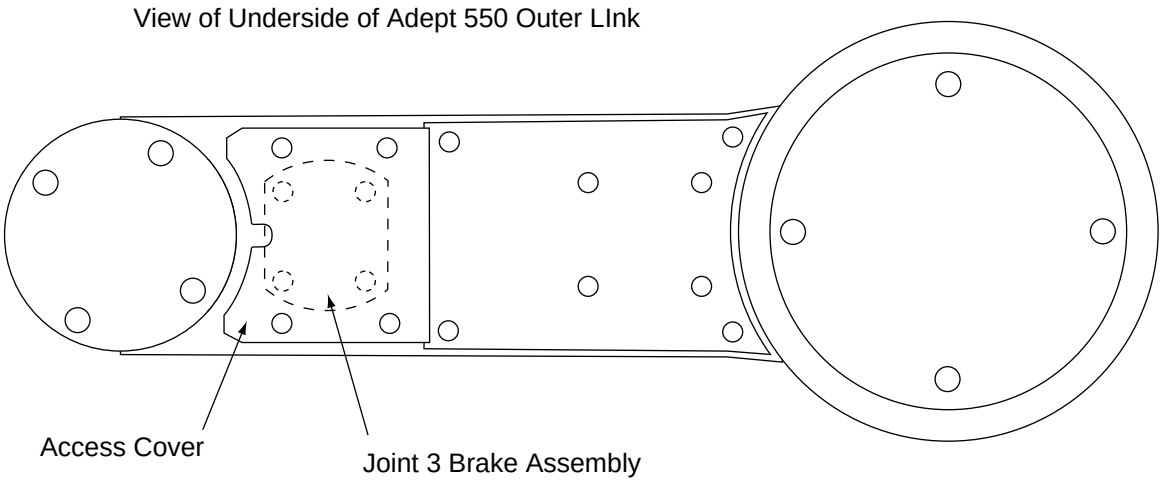

Figure 5-2. Location of Access Cover on Underside of Outer Link

Artisan Technology Group - Quality Instrumentation ... Guaranteed | (888) 88-SOURCE | www.artisantg.com

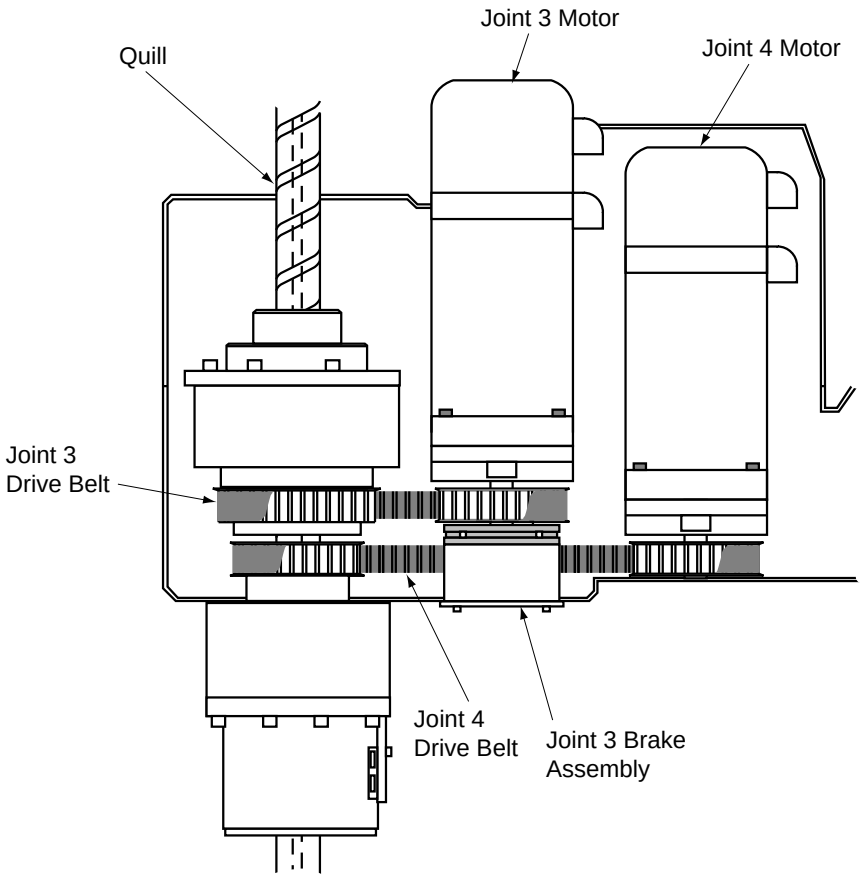

Figure 5-3. Location of Joint 3 and Joint 4 Drive Belts

6. Re-install the Joint 3 brake assembly, making sure the spacers are in place (see Figure 5-4) and that the brake assembly fits correctly. You may have to move Joint 3 up or down slightly to ensure the brake assembly meshes correctly with the mechanism on Joint 3. Secure the brake assembly with the 4 screws.

7. Install the access cover using the 4 screws you removed earlier. Make sure the cable running along the inside of the opening is not pinched when you install the access cover.

Artisan Technology Group - Quality Instrumentation ... Guaranteed | (888) 88-SOURCE | www.artisantg.com

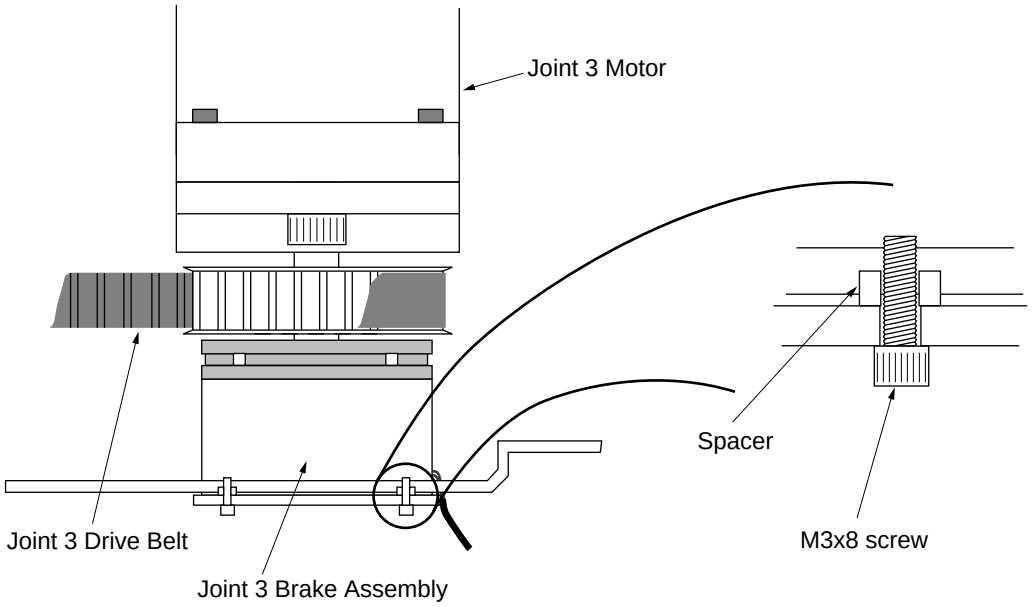

Figure 5-4. Close-up View of Joint 3 Brake Assembly

Artisan Technology Group - Quality Instrumentation ... Guaranteed | (888) 88-SOURCE | www.artisantg.com

5.5 Maintenance and Inspection of Air Filters

Adept PA-4 Fan Filter Inspection and Cleaning

The air filter located on the front of the chassis should be inspected regularly and cleaned at the first sign of dust or dirt buildup. The filter must be inspected and cleaned at least once per month. Regular cleaning will prolong the life of the filter. If the filter becomes clogged or unusable for any reason, you will need to order a new air filter. The part number for the filter is 40330-11200.

WARNING: Dangerous voltages are present inside the power chassis. Turn off the power to the power chassis and protect it against an unauthorized return to service, before opening the front grill to inspect the air filter. Failure to observe this warning could cause injury or damage to your equipment.

1. Turn off the power to the power chassis and protect it against an unauthorized return to service.
2. Open the front grill by loosening two screws and swinging the grill out.
3. Pull the air filter out and inspect for dust or dirt particles. If cleaning is required, use compressed air to clean the filter.
4. Replace the cleaned air filter and secure the grill.

Adept MV Controller Fan Filter Inspection and Cleaning

The air filter located on the front of the chassis should be inspected regularly and cleaned at the first sign of dust or dirt buildup. The filter must be inspected and cleaned at least once per month. Regular cleaning will prolong the life of the filter. If the filter becomes clogged or unusable for any reason, you will need to order a new air filter; the Adept part number is 40330-11190.

1. Turn off the controller and protect it against an unauthorized return to service.
2. Open the front grill by loosening two screws and swinging the grill out.
3. Pull the air filter out and inspect for dust or dirt particles. If cleaning is required, use compressed air to clean the filter.
4. Replace the cleaned air filter and secure the grill.

5.6 Check Lamps on VFP

Use the Lamp Test button on the external Front Panel to test the lamps once per month. Replace any lamps that are not working. Contact Adept Customer Service for replacement information.

Artisan Technology Group - Quality Instrumentation ... Guaranteed | (888) 88-SOURCE | www.artisantg.com

Artisan Technology Group - Quality Instrumentation ... Guaranteed | (888) 88-SOURCE | www.artisantg.com

Technical Specification 6

6.1 Dimensions. 82

Dimensions for Adept 550 Robot 82
User Flange Dimensions for Adept 550 Robot. 83
Dimensions for Adept MV-8 Controller 85
Dimensions for Adept MV-19 Controller 86
Dimensions for Adept PA-4 Power Chassis 87
Dimensions of the External Front Panel 88
Dimensions of the Mounting Brackets 89
MCP Cradle Dimensions 90

6.2 Joint Motions 91

Joint 1 91
Joint 2 91
Joint 3 92
Joint 4 92

6.3 Adept 550 Robot Specifications 93

Adept 550 Robot Working Envelope 95

6.4 Adept PA-4 Power Chassis Specifications 96

Artisan Technology Group - Quality Instrumentation ... Guaranteed | (888) 88-SOURCE | www.artisantg.com

6.1 Dimensions

Dimensions for Adept 550 Robot

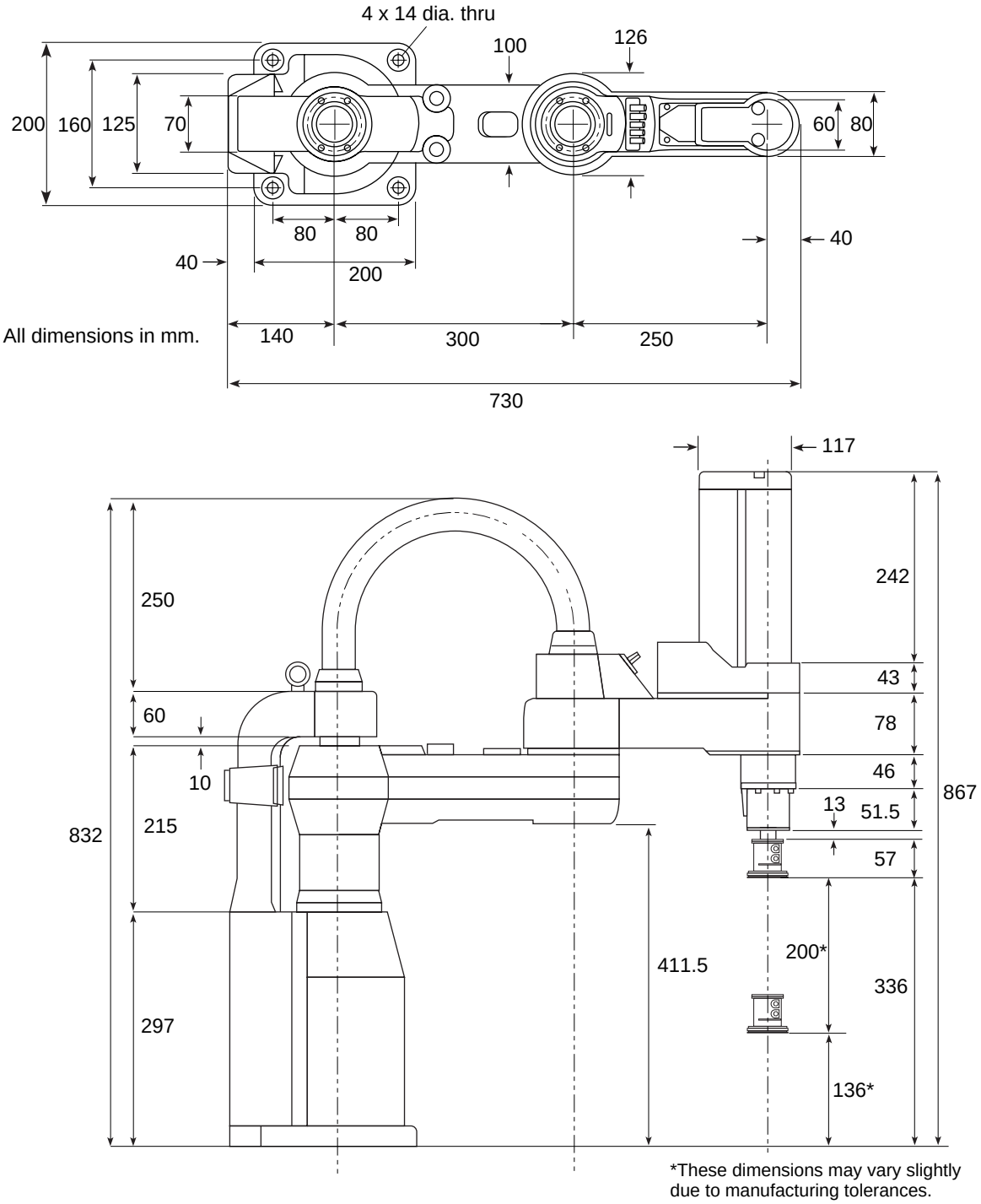

Figure 6-1. Adept 550 Robot Top and Side Dimensions

Artisan Technology Group - Quality Instrumentation ... Guaranteed | (888) 88-SOURCE | www.artisantg.com

User Flange Dimensions for Adept 550 Robot

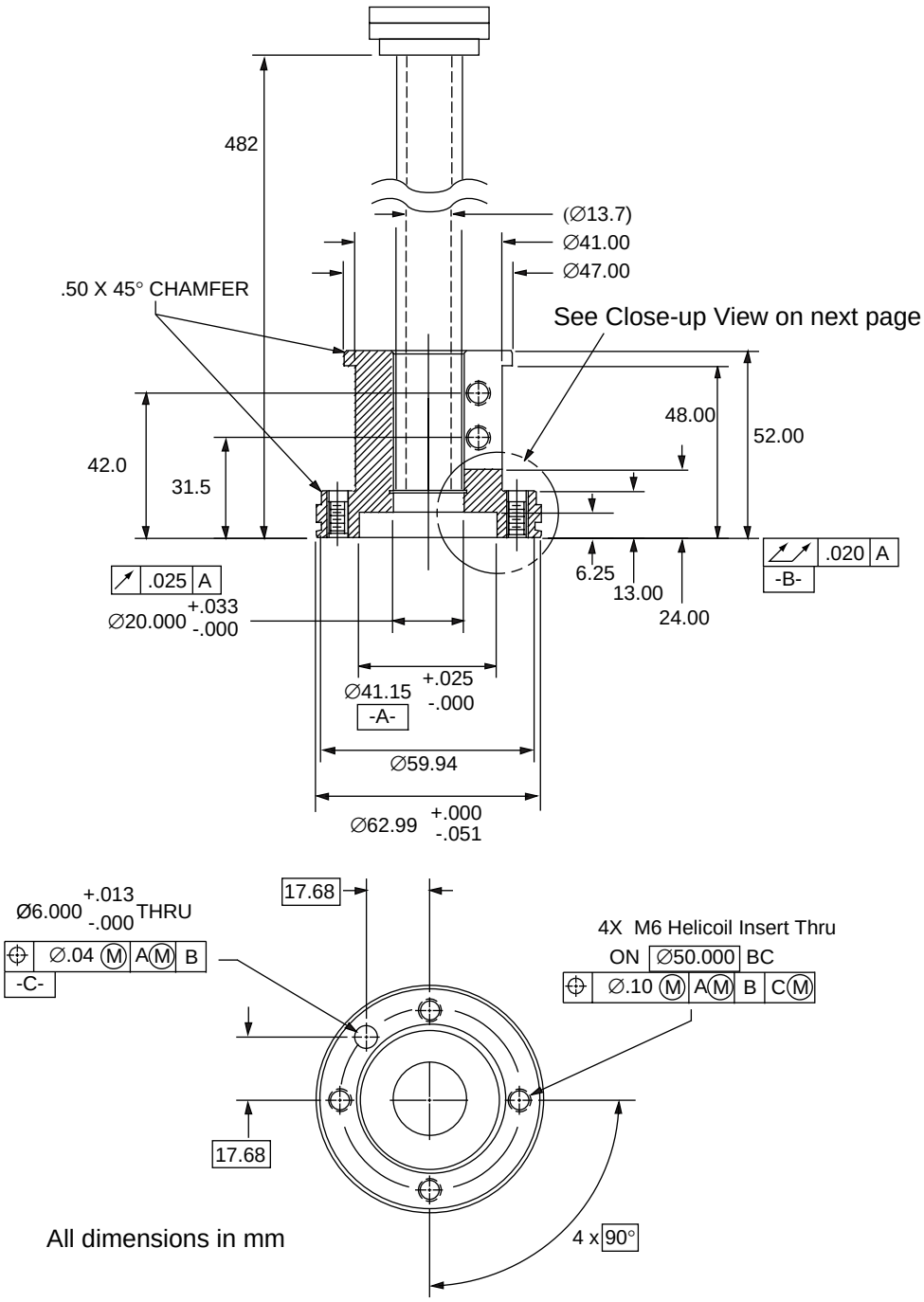

Figure 6-2. User Flange Dimensions for Adept 550 Robot

Artisan Technology Group - Quality Instrumentation ... Guaranteed | (888) 88-SOURCE | www.artisantg.com

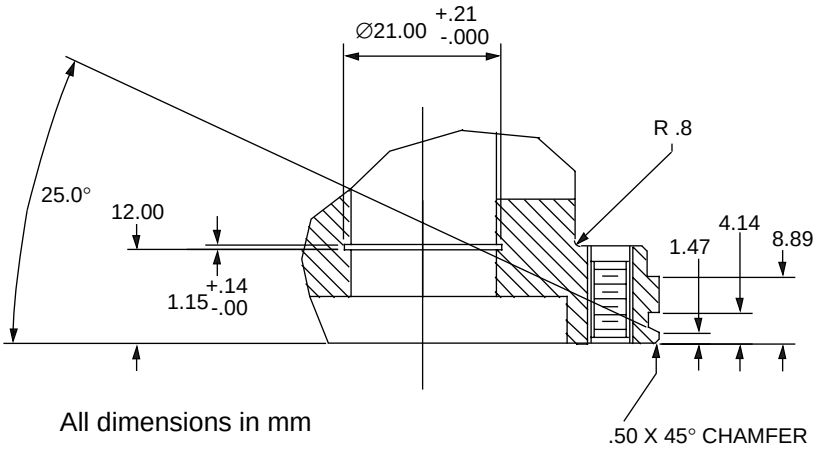

Figure 6-3. User Flange Close-up Dimensions

Artisan Technology Group - Quality Instrumentation ... Guaranteed | (888) 88-SOURCE | www.artisantg.com

Dimensions for Adept MV-8 Controller

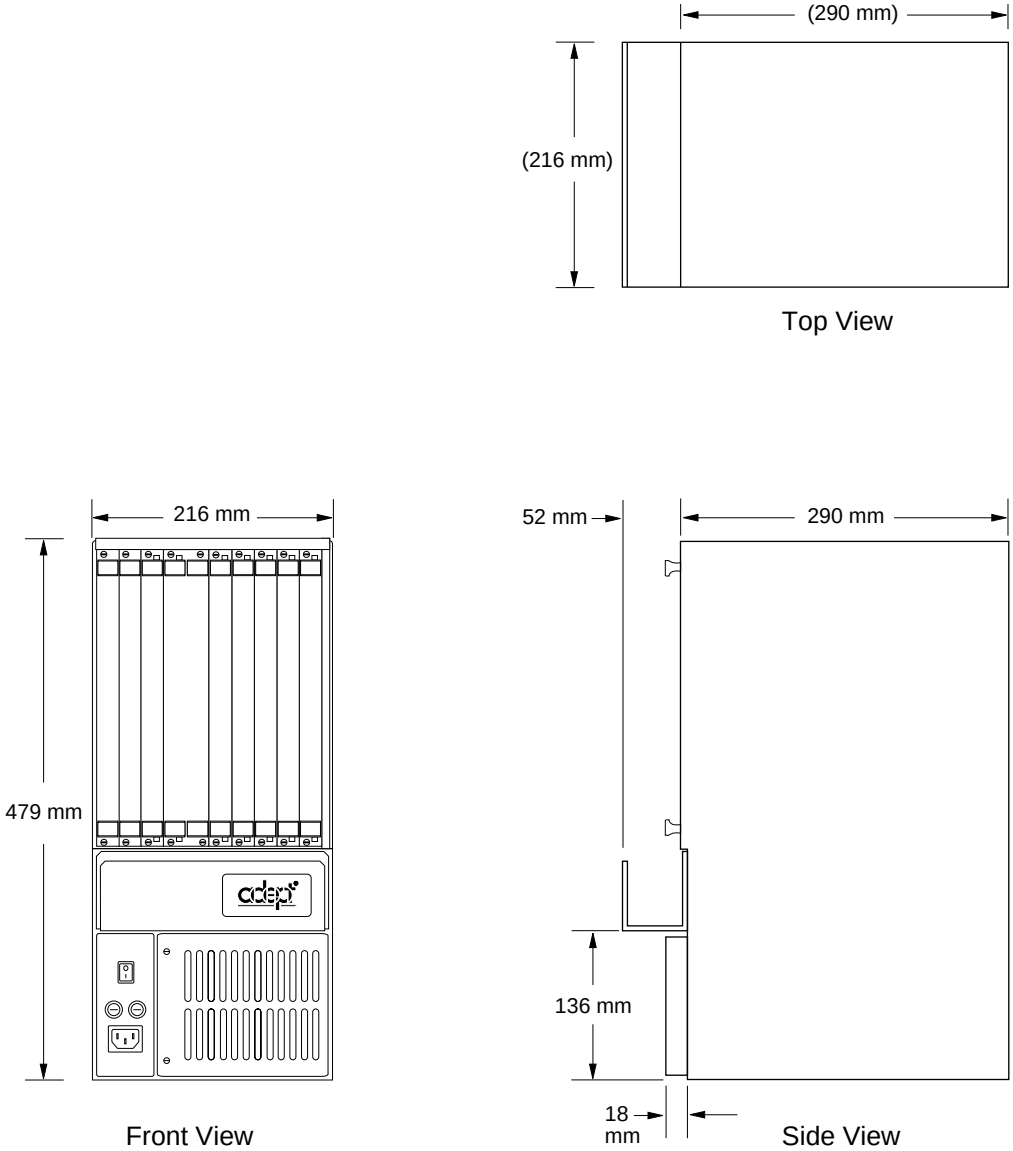

Figure 6-4. Adept MV-8 Dimensions

Artisan Technology Group - Quality Instrumentation ... Guaranteed | (888) 88-SOURCE | www.artisantg.com

Dimensions for Adept MV-19 Controller

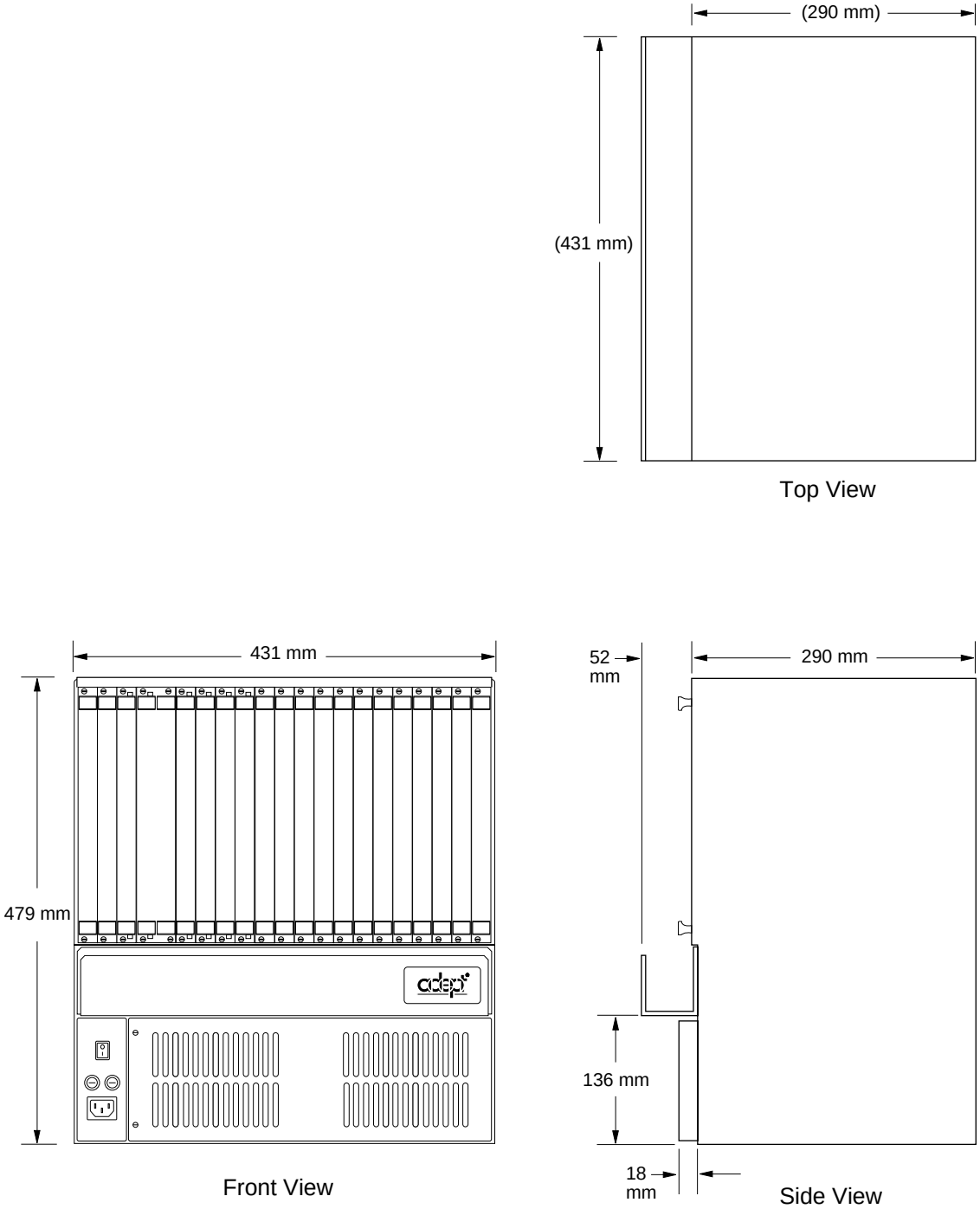

Figure 6-5. Adept MV-19 Dimensions

Artisan Technology Group - Quality Instrumentation ... Guaranteed | (888) 88-SOURCE | www.artisantg.com

Dimensions for Adept PA-4 Power Chassis

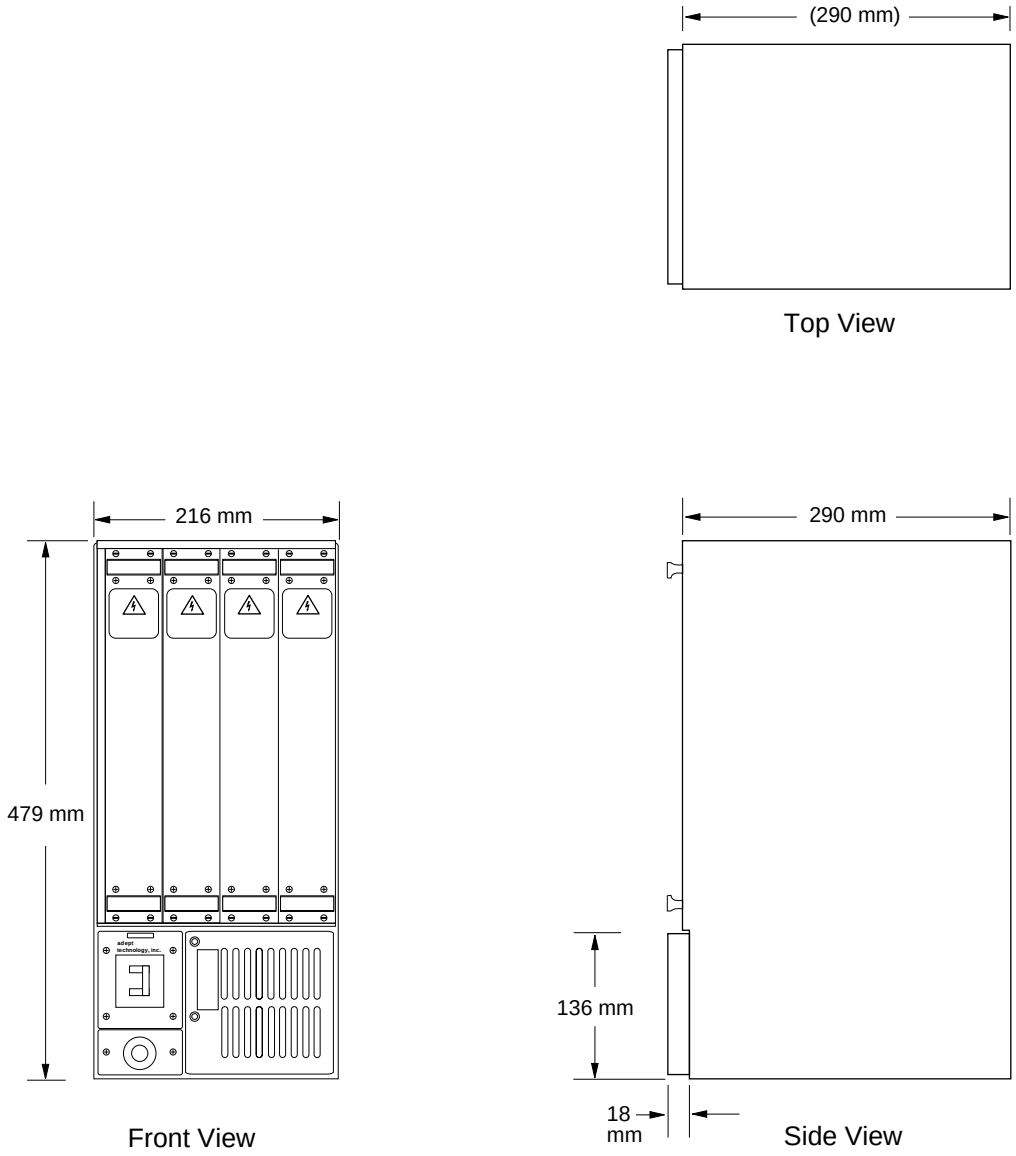

Figure 6-6. Adept PA-4 Power Chassis Dimensions

Artisan Technology Group - Quality Instrumentation ... Guaranteed | (888) 88-SOURCE | www.artisantg.com

Dimensions of the External Front Panel

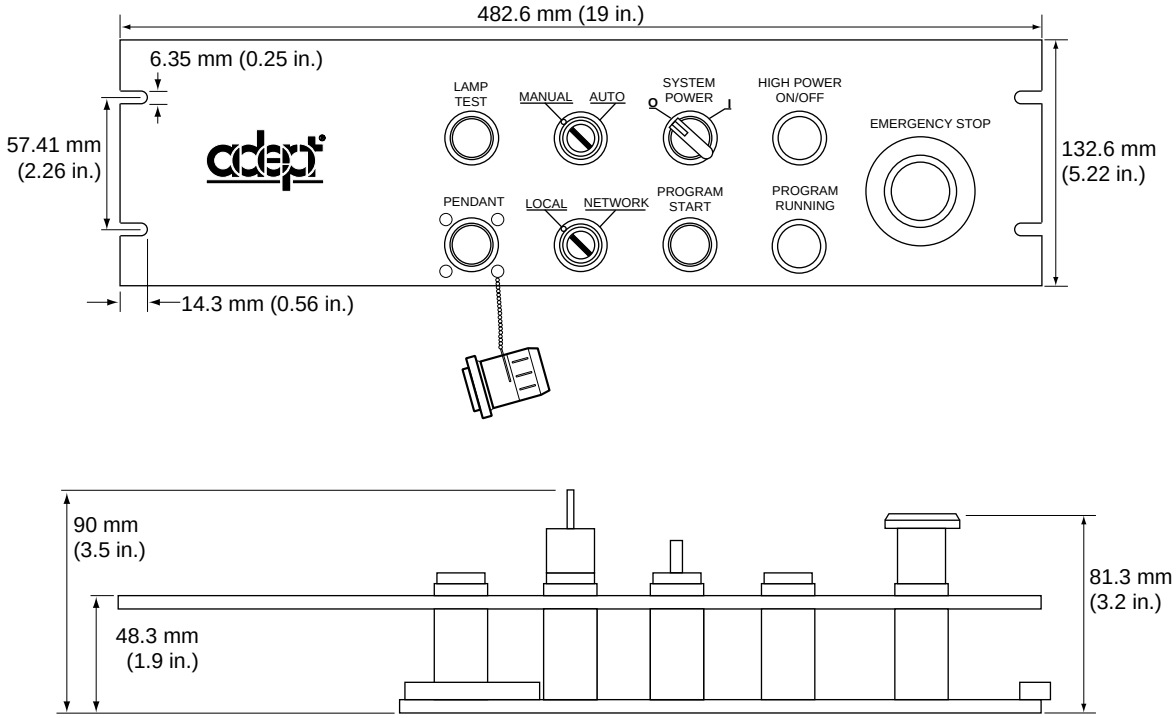

Figure 6-7. Adept External Front Panel Dimensions

Artisan Technology Group - Quality Instrumentation ... Guaranteed | (888) 88-SOURCE | www.artisantg.com

Dimensions of the Mounting Brackets

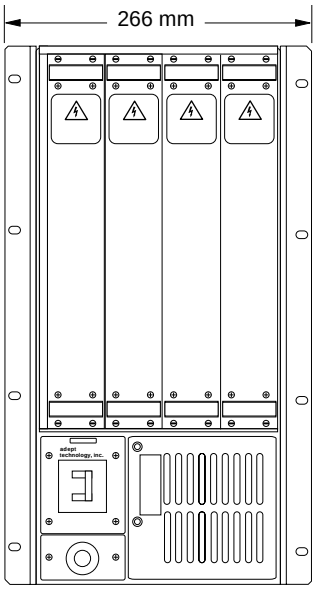

Power Chassis with mounting brackets installed

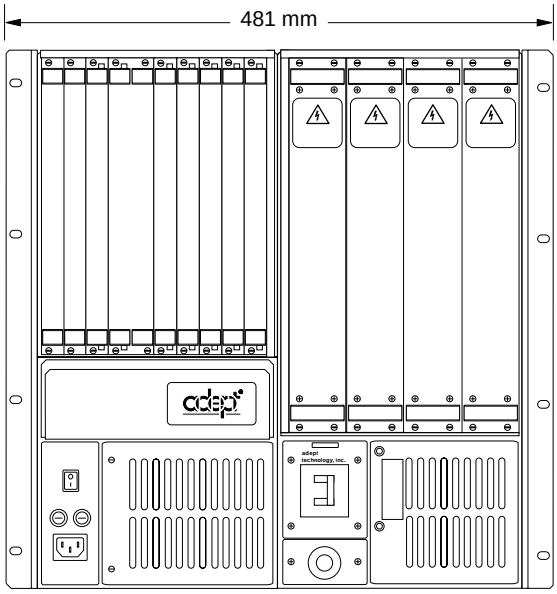

Controller and Power Chassis with mounting brackets installed

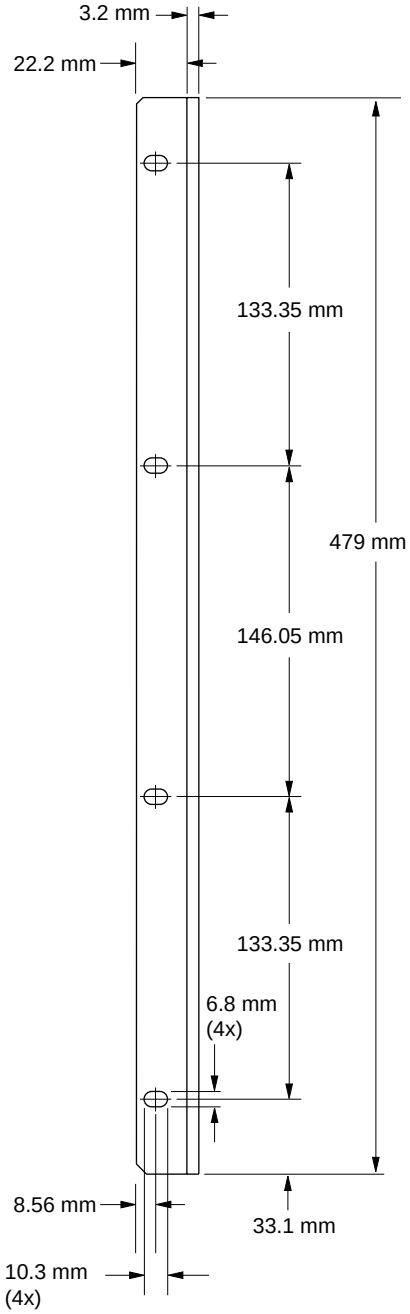

Figure 6-8. Adept MV-8 and PA-4 With Mounting Brackets Installed

Artisan Technology Group - Quality Instrumentation ... Guaranteed | (888) 88-SOURCE | www.artisantg.com

MCP Cradle Dimensions

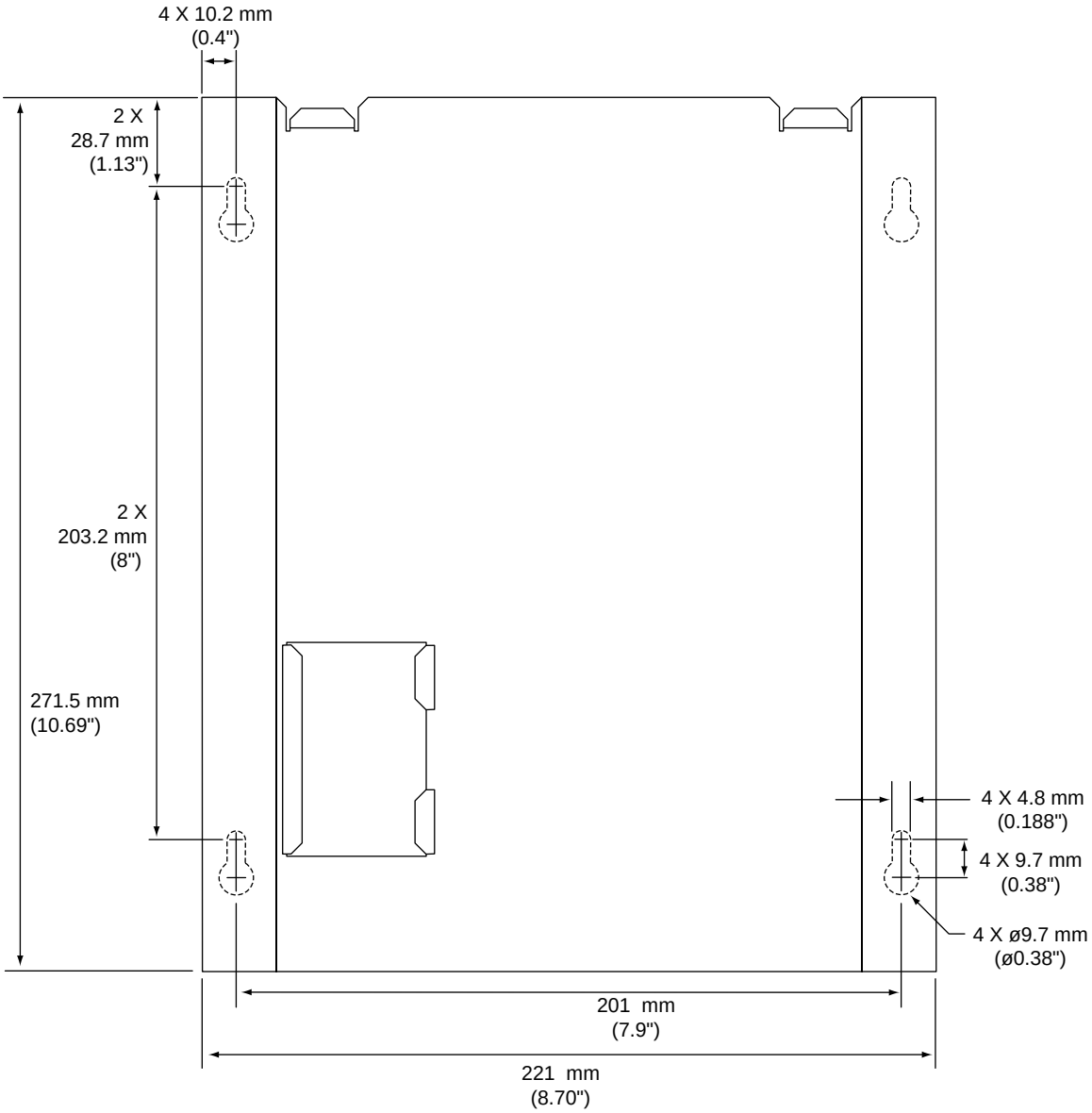

Figure 6-9. MCP Cradle Dimensions

Artisan Technology Group - Quality Instrumentation ... Guaranteed | (888) 88-SOURCE | www.artisantg.com

6.2 Joint Motions

Joint 1

Joint 1, also referred to as the “shoulder,” provides rotation of the inner link. Joint 1 motion is limited to ±100°. See Figure 6-10.

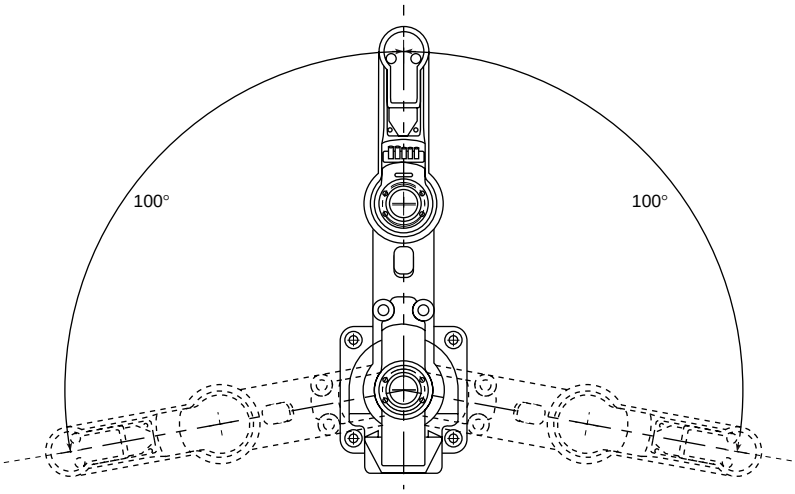

Figure 6-10. Joint-1 Motion

Joint 2

Joint 2, also referred to as the “elbow,” provides rotation of the outer link. Joint 2 motion is limited to ±140°. Joint 2’s motion is similar to an elbow capable of acting in both left- and right-hand configurations (see Figure 6-11).

When you teach a robot location, the robot elbow (when viewed from the back of the robot) will be pointing either to the left or right. These arm orientations are referred to as “Lefty” and “Righty.” In Figure 6-11, the dotted outline is in a lefty configuration and the solid outline is in a righty configuration. Under program control, the robot will always move to the next location in its current configuration (lefty or righty) unless the location is a “precision point” or the LEFTY or RIGHTY program instruction is used.

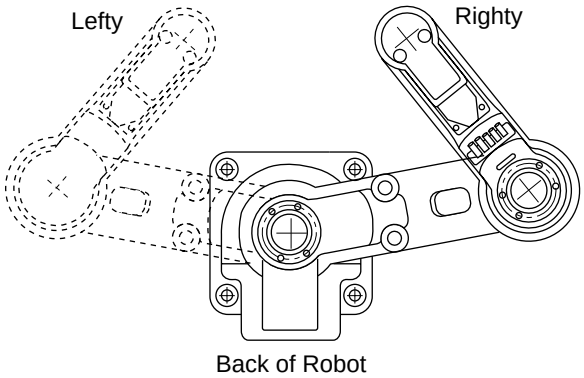

Figure 6-11. Joint-2 Motion and LEFTY/RIGHTY Configurations

Artisan Technology Group - Quality Instrumentation ... Guaranteed | (888) 88-SOURCE | www.artisantg.com

Joint 3

Joint 3 provides vertical translation of the quill. Joint 3 drives the quill to up and down with a maximum stroke of 200 mm (7.9”). See Figure 6-12.

The Adept 550 Cleanroom robot has a maximum Joint 3 stroke of 180 mm; see Appendix A.

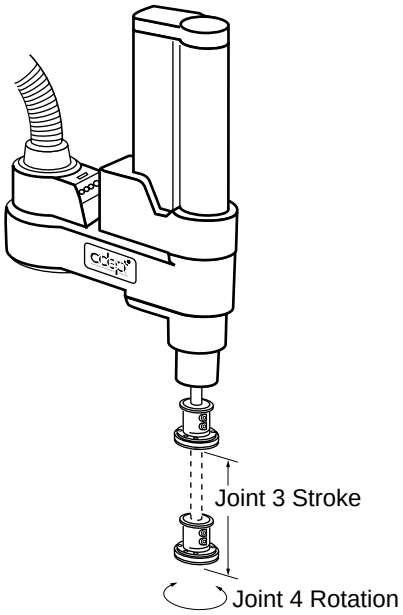

Figure 6-12. Joint-3 and Joint-4 Motions

Joint 4

Joint 4, also referred to as the “wrist”, provides for rotation of the quill. Joint 4 does not have hardstops, but software limits its motion to ±360° (see Figure 6-12).

Artisan Technology Group - Quality Instrumentation ... Guaranteed | (888) 88-SOURCE | www.artisantg.com

6.3 Adept 550 Robot Specifications

All specifications subject to change without notice.

Table 6-1. Adept 550 Robot Specifications

Adept 550 Robot Specifications	
Reach	
Maximum radial	550 mm (21.7")
Minimum radial	194 mm (7.6")
Vertical clearance (bottom of base to end of quill) • with maximum joint 3 retraction • with maximum joint 3 extension	 336 mm (13.2") 136 mm (5.3")
Vertical Stroke	
Joint 3 (Z direction)	200 mm (7.9")
Joint Rotation	
Joint 1	±100°
Joint 2	±140°
Joint 4	±360°
Maximum Payload (including end-effector and arm-mounted tooling)	
During operation	5.5 kg (12.1 lb)
Inertia Load	
About Joint 4 axis (maximum)	450 $kgcm^2$ (150 $lb\text{-}in^2$)
Force	
Joint 3 downward force (minimum) without payload	12.1 kg (26.6 lb)
Cycle Time[a]	
2 kg (4.4 lb)	0.8 seconds
Resolution	
Joint 1	0.0008° per encoder count
Joint 2	0.0012° per encoder count
Joint 3 (vertical Z)	0.0022 mm per encoder count
Joint 4 (tool rotation)	0.0012° per encoder count
Repeatability (at constant temperature)	
X,Y plane	± 0.025 mm (±0.001")
Joint 3 (vertical Z)	±0.03 mm (±0.001")
Joint 4 (rotational)	±0.05°

Artisan Technology Group - Quality Instrumentation ... Guaranteed | (888) 88-SOURCE | www.artisantg.com

Table 6-1. Adept 550 Robot Specifications (Continued)

Adept 550 Robot Specifications	
Maximum Joint Speed (with 2 kg [4.4 lb] payload)	
Joint 1	270° / sec
Joint 2	430° / sec
Joint 3	1000 mm / sec (40" / sec)
Joint 4	480° / sec
Weight	
Robot without options	approximately 40 kg (90 lb)
Power chassis, with two amplifier modules	approximately 14.5 kg (32 lb)
MV-8 controller, with 030, SIO, VGB	approximately 14.5 kg (32 lb)

[a] The robot tool performs continuous path, straight-line motions 25 mm (1") up, 305 mm (12") over, 25 mm (1") down, and back along the same path. COARSE is enabled and BREAKs are used at each end location. Not achievable over all paths.

Artisan Technology Group - Quality Instrumentation ... Guaranteed | (888) 88-SOURCE | www.artisantg.com

Adept 550 Robot Working Envelope

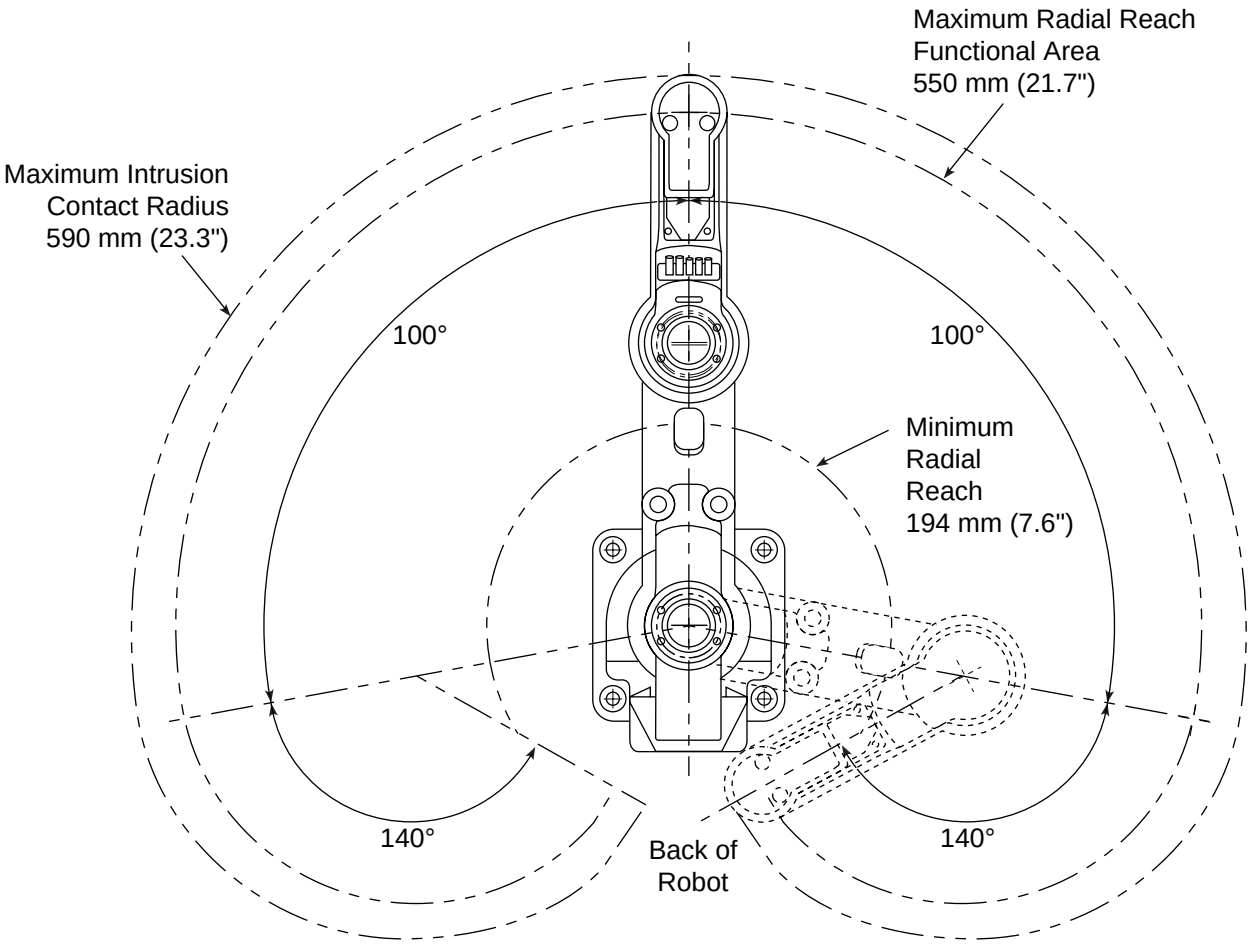

Figure 6-13. Adept 550 Robot Working Envelope

Artisan Technology Group - Quality Instrumentation ... Guaranteed | (888) 88-SOURCE | www.artisantg.com

6.4 Adept PA-4 Power Chassis Specifications

The following power consumption information is provided to allow customers to install adequate electrical wiring and power sources for worst case (short duration) demands of the Adept PA-4 power chassis. The typical values are for calculating air conditioning requirements.

Table 6-2. Power Consumption for PA-4 Power Chassis with an Adept 550 System

Line Voltage		Typical	Worst Case
380-415 VAC, 50/60Hz, 3 phase[a]	Current (RMS)	3.5 amps/phase	8.2 amps/phase
	Watts	0.72 kW	1.3 kW
200-240 VAC, 50/60Hz, 3 phase	Current (RMS)	3.0 amps/phase	7.0 amps/phase
	Watts	0.72 kW	1.3 kW

[a] In the 380-415 VAC configuration, the Adept system draws current for a short duration during the positive peak voltage only.

Artisan Technology Group - Quality Instrumentation ... Guaranteed | (888) 88-SOURCE | www.artisantg.com

Adept 550 CleanRoom Robot A

A.1 Introduction **98**
Vacuum Specifications 98
A.2 Installation **98**
A.3 Adept 550 CleanRoom Robot Dimensions **99**

Artisan Technology Group - Quality Instrumentation ... Guaranteed | (888) 88-SOURCE | www.artisantg.com

A.1 Introduction

The Adept 550 Class 10 CleanRoom robot meets or exceeds specifications for Class 10 cleanroom products.

The Adept 550 CleanRoom robot product specifications are the same as the standard Adept 550 robot (listed in Table 6-1), except the Vertical Stroke (Joint 3 - Z direction) is 180 mm (7.1"). The working envelope dimensions for the Adept 550 CleanRoom robot are the same as those shown in Figure 6-13.

Vacuum Specifications

Table A-1. Adept 550 CleanRoom Robot Vacuum Specifications

Vacuum Fitting on 550	50.5 mm external diameter 45 mm internal diameter
Air pressure, minimum	800 mm of water column
Air flow rate, minimum	1.2 cubic meter / minute
Vacuum source	Spiral Blowers Model SL5A60F* (or equivalent) *In the U.S. contact Japanese Products Corp. at 203-840-1601 for information. In Europe contact Japan Servo Europe in the Netherlands at 599-31-3414-27575.

A.2 Installation

The robot installation procedures are the same as those listed in Chapter 2, with the additional step of connecting a user-supplied vacuum source as described above.

Artisan Technology Group - Quality Instrumentation ... Guaranteed | (888) 88-SOURCE | www.artisantg.com

A.3 Adept 550 CleanRoom Robot Dimensions

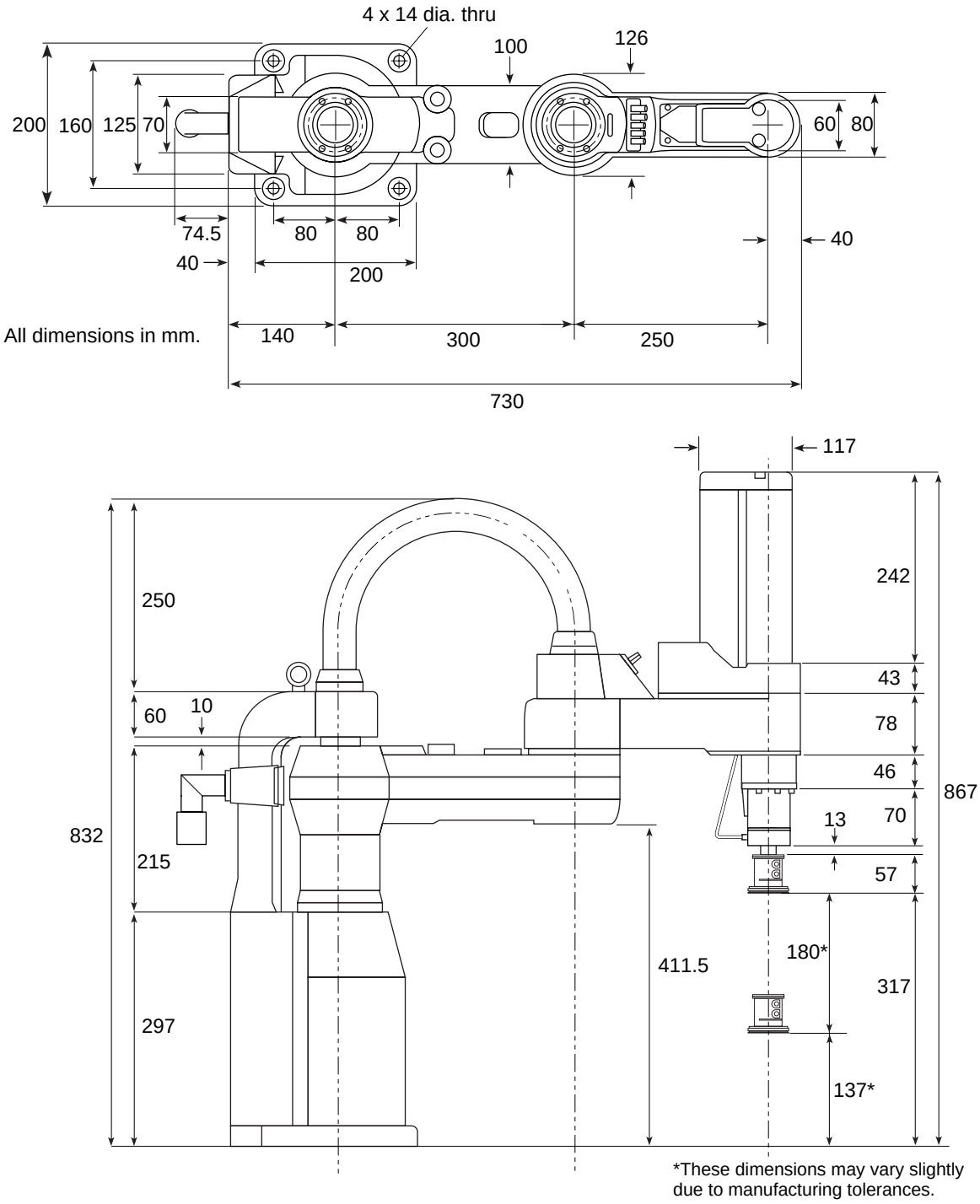

Figure A-1. Adept 550 CleanRoom Robot Top and Side Dimensions

Artisan Technology Group - Quality Instrumentation ... Guaranteed | (888) 88-SOURCE | www.artisantg.com

Artisan Technology Group - Quality Instrumentation ... Guaranteed | (888) 88-SOURCE | www.artisantg.com

Dual Adept 550 Robots B

B.1 Introduction 102
Dual Adept 550 Robot System Description 102
B.2 Installation 102
VMEbus Address for VJI Module 102
Adept PA-4 Power Chassis 102
Cable Installation 103
B.3 Operation with the Manual Control Pendant (MCP) 103
B.4 Programming Information 103
V+ Language Programming 103
V+ Monitor Commands 103
B.5 Emergency Stop Circuit Shuts Off Both Robots 104

Artisan Technology Group - Quality Instrumentation ... Guaranteed | (888) 88-SOURCE | www.artisantg.com

B.1 Introduction

All of the information in this instruction handbook is applicable to the Dual Adept 550 robot configuration. This appendix describes some additional considerations when working with this product.

Dual Adept 550 Robot System Description

A Dual Adept 550 robot system consists of the following components:

- two standard Adept 550 robots, no modifications required
- an Adept MV-8 or -19 controller with two VJI modules installed
- two PA-4 power chassis with two amplifier modules in each chassis.
- a Dual Adept SCARA Kinematics License and a V^+ Extensions License

B.2 Installation

The installation process for the system is the same as described in Chapter 2, except that there are two VJI modules in the Adept MV controller, and four amplifier modules in two PA-4 power chassis.

VMEbus Address for VJI Module

If you purchased both Adept 550 robots at the same time as part of a Dual Adept 550 robot system, then the two VJI modules will be configured at the factory for the correct VMEbus address.

If you are upgrading or installing a 2nd VJI as a replacement part, then you should check the VJI address setting to make sure it is configured correctly; it should be set as Servo Board 3. See the VJI chapter in the *Adept MV Controller User's Guide* for the correct switch setting.

Adept PA-4 Power Chassis

Each Adept 550 robot requires two B+ amplifier modules, resulting in a total of four amplifier modules per Dual Adept 550 robot system. You must purchase two power chassis, and install two amplifier modules in each power chassis.

Artisan Technology Group - Quality Instrumentation ... Guaranteed | (888) 88-SOURCE | www.artisantg.com

Cable Installation

The extra VJI module and two amplifier modules require additional cables that are shipped with the system. It is important to keep the cables organized and prevent cables from being interchanged by mistake. The table below shows a typical arrangement for cable assignments.

Table B-1. Typical Robot-VJI-Amplifier Assignments in Dual Adept 550 Robot System

Robot Number	VJI Module	Power Chassis	Amplifier Module
1	1 (Left)	1	1, 2
2	2 (Right)	2	1, 2

Make sure to clearly label or mark the cables so it will be obvious which robot they belong to, in case the cables have to be disconnected and re-installed.

B.3 Operation with the Manual Control Pendant (MCP)

The optional MCP can be used to control either robot in a Dual Adept 550 robot system. By default, the MCP controls robot 1. To switch to robot 2, press the DEV / F3 button on the MCP. The DEV LED turns on in this condition.

To switch back to robot 1, press the DEV / F3 button again. The DEV LED turns off.

See Section 4.5 for more information on using the MCP.

B.4 Programming Information

V^+ Language Programming

By default, Task 0 is used to control robot 1. Task 1 is normally recommended for robot 2. Use the SELECT ROBOT=2 and ATTACH instructions in your program to select robot 2. See the *V^+ Language User's Guide* and the *V^+ Language Reference Guide* for more information on these instructions.

V^+ Monitor Commands

By default, monitor commands such as HERE and WHERE apply to robot 1. Use the monitor command SELECT ROBOT=2 first when you need to display the location of robot 2.

> **NOTE:** The DISABLE POWER command shuts off high power to both robots in a Dual Adept 550 robot system.

Artisan Technology Group - Quality Instrumentation ... Guaranteed | (888) 88-SOURCE | www.artisantg.com

The CALIBRATE monitor command will calibrate both robots. Robot 1 will be calibrated first, then robot 2.

If you want to temporarily disable either robot and continue to use the other, you can use the DISABLE ROBOT[] command. For example DISABLE ROBOT[2] will cause V^+ to ignore robot 2. If you issue this command before you use the CALIBRATE command, then only one robot will be calibrated. Robot 1 can be then used normally. To re-enable robot 2, use the command ENABLE ROBOT[2].

B.5 Emergency Stop Circuit Shuts Off Both Robots

The Adept MV controller has many safety features, including the Emergency Stop circuit. These are designed to safely stop both robots simultaneously in the event of a problem. The Adept multi-robot system is designed for multiple robots operating in the same workcell. Therefore, if one robot has a fault, the other robot will also be stopped. A brief message will be displayed, indicating the problem. The message will also state which joint(s) and which robot is affected. The most common system messages are described in the *V^+ Operating System User's Guide*. A full list of system messages with complete explanation and suggested user actions is in the *V^+ Language Reference Guide*.

Examples of faults that can be detected by the Adept control system are *Envelope error* and *Motor stalled*. Both of these messages may mean that a robot has collided with an unexpected object in the workspace, therefore both robots will be stopped.

The Emergency Stop signal will also stop both robots connected to the same controller. It is not possible to use the E-Stop signal to stop only one robot. The Emergency Stop switches on the external Front Panel (VFP) and the Manual Control Pendant (MCP) shut off high power to both robots when the switch is pressed.

Artisan Technology Group - Quality Instrumentation ... Guaranteed | (888) 88-SOURCE | www.artisantg.com

EMC Test Information C

C.1 Electromagnetic Compatibility Testing Results

The Adept 550 robot meets all applicable requirements as mandated by the EMC Directive. Table C-1 summarizes the test results of some of the most critical tests.

Table C-1. EMC Test Results

Test Performed	Status
Fast Transient Burst (FTB) IEC61000-4-4 to level 3 (2 kV power, 1 kV I/O)	Passed without qualification
Electrostatic Discharge (ESD) IEC61000-4-2 to level 4 (8 kV contact discharge)	Passed without qualification
Radiated Immunity ENV50140 to level 3 (10 V/m; 80-100 MHz, 80% mod. @ 1 kHz)	Passed without qualification
Conducted Immunity ENV50141 to level 3 (10 V)	Passed without qualification
Damped Oscillatory IEC255-4 (1 kV)	Passed without qualification
Gradual Shutdown and Start-up IEC1131-2	Passed without qualification
Surge IEC1000-4-5 to level 3 2 kV common mode on I/Os only	Passed without qualification
Radiated Emissions EN55011 for group 1 ISM to Class A - 2 dB	Passed without qualification
Conducted Emissions EN55011 for group 1 ISM to Class A - 2 dB	Passed without qualification

Artisan Technology Group - Quality Instrumentation ... Guaranteed | (888) 88-SOURCE | www.artisantg.com

Artisan Technology Group - Quality Instrumentation ... Guaranteed | (888) 88-SOURCE | www.artisantg.com

Index

A

AC power
- connecting power cord to controller 38
- connecting to controller 37
- connecting to power chassis 39
- installation diagram for 200-240VAC 41
- installation diagram for 380-415VAC 41
- requirements for controller 37
- requirements for power chassis 39
- voltage / current ratings
  - controller 37
  - power chassis 39

Adept 550 robot
- specifications 93
- working envelope 95

air lines
- user, in robot 48

air quality, facility requirements for robot 17

amplifier module
- connections / indicators 44
- fuses 45
- installing 46
- interlock circuit 46
- removing 45

Arm Signal cable, installation 33

A-Series controller, installation 27

Auto, keyswitch position 29

Automatic mode
- how to use 61

B

B+ amplifier module
- connections / indicators 44

Brake Release button 62

brakes
- description 62
- releasing for manual movement 62
- releasing J3 for manual movement 62

C

cable connections, system 31

calibration, how to perform 66

Category 1
- risk assessment 4

circuit breaker
- on power chassis 45

CleanRoom robot
- operating environment specifications 17

CleanRoom robot, Adept 550 98–99
- dimensions 99
- vacuum specifications 98

compatibility, for Category 1 equipment 3

Control keyswitch, on External Front Panel 29

controller
- connecting to power chassis 34
- connecting to robot 33
- dimensions, MV-19 86
- dimensions, MV-8 85
- grounding 36
- joining to power chassis 22
- panel mounting 24
- rack mounting 24

current / voltage ratings
- controller 37
- power chassis 39

Customer E-Stops 50–58

Customer Safety Barrier
- switch specifications 50

Customer Service, contact information 13

cycle time, specification 93

D

Digital I / O on SIO
- connector pinouts 55
- input specifications 53
- output specifications 54

dimensions
- Adept 550 robot 82
- Adept MV-19 controller 86

Artisan Technology Group - Quality Instrumentation ... Guaranteed | (888) 88-SOURCE | www.artisantg.com

Adept MV-8 controller 85
CleanRoom robot 99
External Front Panel 88
MCP cradle 90
mounting brackets 89
power chassis 87
dowel pin, for keying on end-effectors 46
drive belts, checking tension 76
dual 550 robot system 102–104
cable installation 103
E-stop circuit 104
installation 102
programming 103
using MCP with 103

E

electrical lines
user, in robot 48
EMC test information 105
Emergency Stop circuit, see E-Stop circuit
Emergency Stop switch
on External Front Panel 29
Enable Power
how to from MCP 65
end-effector
dowel pin 46
grounding 46
envelope, working 95
E-Stop circuit 50–58
Customer Safety Barrier switch
specifications 50
drawings 57
dual 550 robot system 104
external input 52
External E-Stop input 52
External Front Panel 29–30
controls/indicators 29
dimensions 88
installation 30

F

fan filter, cleaning in controller 79
fan filter, cleaning in power chassis 79
force, specification 93
fuses
amplifier module 45
chassis 45

G

grounding
system information 36

H

hardstops
description 71
specifications 71
hazards from expelling a part 6
High Power enable process, description of 50
High Power On/Off switch, on External Front Panel 29
humidity, required range
power chassis 18
robot 17

I

installation
AC power 37–43
dual 550 robot system 102
External Front Panel 30
joining power chassis to controller 22
keyboard 27
monitor 27
power chassis in rack or panel 24
power cord to controller 38
required tools 20
system cable connections 31

J

Joint motion
Joint 1 91
Joint 2 91
Joint 3 92
Joint 4 92
joint resolution, specification 93
joint rotation, specification 93
joint speed, specification 94
Joint state
with SCARA robot 69

K

keyboard
installation 27

L

Lamp Test button, on External Front Panel 29
Lefty configuration 91

Artisan Technology Group - Quality Instrumentation ... Guaranteed | (888) 88-SOURCE | www.artisantg.com

Local, keyswitch position 29
lubrication, Joint 3 75

M

maintenance
check mounting bolts 74
check robot leveling 74
checking drive belts 76
checking VFP lamps 79
cleaning controller fan filter 79
cleaning power chassis fan filter 79
recommended schedule 74
Manual Control Pendant
calibrating robot 66
connection on External Front Panel 30
dimensions for cradle 90
how to use 63–70
installation 35
Manual mode
High Power enable process 50
how to stop robot 65
how to use 50, 60
robot speed limited 50, 60
Manual, keyswitch position 29
maximum payload, specification 93
MCP, see Manual Control Pendant
mode control buttons on MCP 68
monitor
installation 27
Motor Power cable, installation 32
mounting brackets
dimensions 89
install positions
controller 25
power chassis 26
installation 24

N

Network, keyswitch position 29

O

operating environment specifications
controller and power chassis 17
robots 17
Operating keyswitch, on External Front Panel 29
operating modes
Automatic 11, 61
Manual 11, 60

P

panel mounting 24
Passive E-Stop 52
Pendant connection, on External Front Panel 30
power chassis
AC power requirements 39
changing voltage setting 42
circuit breaker 45
connecting to controller 34
connecting to robot 32
dimensions 87
fuses 45
grounding 36
interlock circuit 46
joining to controller 22
panel mounting 24
rack mounting 24
power cord from power chassis, specifications 40
power entry module on controller 37
Program Running lamp, on External Front Panel 29
Program Start switch, on External Front Panel 29

Q

qualification of personnel 10

R

rack mounting 24
reach, specification 93
repeatability, specification 93
Righty configuration 91
risks that cannot be avoided 12
robot
calibrating from MCP 66
definition of industrial 3
dimensions 82
dual 550 system 102–104
grounding 36
how to start 65
how to stop in Manual mode 65
intended uses 7
joint locations 2
maintenance 74–78
mounting bolt specifications 21
mounting procedure 20
mounting surface 20
moving with MCP 67

Artisan Technology Group - Quality Instrumentation ... Guaranteed | (888) 88-SOURCE | www.artisantg.com

operating environment
specifications 17
shipment specifications 18
specifications 93
speed limited in Manual mode 50
static forces 5
transport and storage 18
unpacking and inspection 19
user flange dimensions 83
working area 9
working envelope 95
robot modifications
acceptable 8
unacceptable 9
robot-mounted equipment
grounding 36

S

safety 4–12
during maintenance 12
equipment for operators 11
expelling a part 6
impact and trapping points 6
qualification of personnel 10
required safeguards 5
sources for information 7
safety barriers
requirements 5
SCARA 2
softstops
description 71
SPEC utility program
to set softstops 71
speed bars on MCP 68
S-series controller, installation 28
system cable connections 31
system grounding
information 36
System Power switch, on External Front Panel 29

T

technical support, contact
information 13
temperature, required range
power chassis 18
robot 17

U

user
air lines, in robot 48
electrical lines, in robot 48
user flange dimensions 83

V

vertical stroke, specification 93
VFP, see External Front Panel
VJI-to-Amp cable, installation 34
VMEbus address
for dual 550 robot system 102
voltage
changing setting on power chassis 42
maximum operating
controller 37
power chassis 39
minimum operating
controller 37
power chassis 39

W

weight
controller 94
power chassis 94
robot 94

Artisan Technology Group - Quality Instrumentation ... Guaranteed | (888) 88-SOURCE | www.artisantg.com

Adept User's Manual Comment Form

We have provided this form to allow you to make comments about this manual, to point out any mistakes you may find, or to offer suggestions about information you want to see added to the manual. We review and revise user's manuals on a regular basis, and any comments or feedback you send us will be given serious consideration. Thank you for your input.

NAME_____ DATE_____

COMPANY _____

ADDRESS_____

PHONE_____

MANUAL TITLE:_____

PART NUMBER and REV level:_____

COMMENTS:

_____

_____

_____

_____

_____

_____

_____

_____

Artisan Technology Group - Quality Instrumentation ... Guaranteed | (888) 88-SOURCE | www.artisantg.com

Artisan Technology Group - Quality Instrumentation ... Guaranteed | (888) 88-SOURCE | www.artisantg.com

Artisan Technology Group - Quality Instrumentation ... Guaranteed | (888) 88-SOURCE | www.artisantg.com

adept
technology, inc.

150 Rose Orchard Way
San Jose, CA 95134
408•432•0888

00556-00100, Rev A

Artisan Technology Group - Quality Instrumentation ... Guaranteed | (888) 88-SOURCE | www.artisantg.com

Artisan Technology Group is an independent supplier of quality pre-owned equipment

Gold-standard solutions

Extend the life of your critical industrial, commercial, and military systems with our superior service and support.

We buy equipment

Planning to upgrade your current equipment? Have surplus equipment taking up shelf space? We'll give it a new home.

Learn more!

Visit us at **artisantg.com** for more info on price quotes, drivers, technical specifications, manuals, and documentation.

Artisan Scientific Corporation dba Artisan Technology Group is not an affiliate, representative, or authorized distributor for any manufacturer listed herein.

We're here to make your life easier. How can we help you today?

(217) 352-9330 | sales@artisantg.com | artisantg.com

ARTISAN® TECHNOLOGY GROUP