Adept Technology 550 Table Top SCARA Robot

Limited Availability
Used and in Excellent Condition

Open Web Page

https://www.artisantg.com/79886-1

ARTISAN TECHNOLOGY GROUP

Your **definitive** source for quality pre-owned equipment.

Artisan Technology Group
(217) 352-9330 | sales@artisantg.com | artisantg.com

All trademarks, brandnames, and brands appearing herein are the property of their respective owners.

- Critical and expedited services
- In stock / Ready-to-ship
- We buy your excess, underutilized, and idle equipment
- Full-service, independent repair center

Artisan Scientific Corporation dba Artisan Technology Group is not an affiliate, representative, or authorized distributor for any manufacturer listed herein.

Adept 550 Table-Top Robot

User's Guide

Including Class 10 Clean Room Version and Adept PA-4 Power Chassis

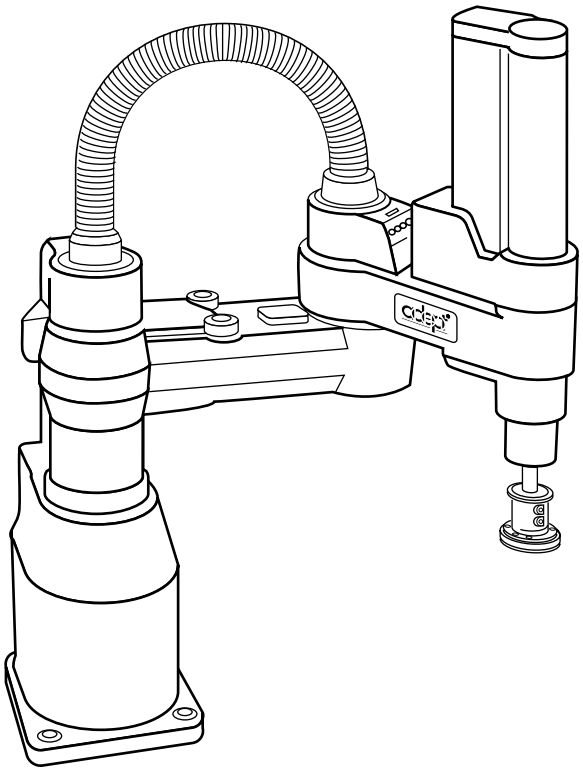

Artisan Technology Group - Quality Instrumentation ... Guaranteed | (888) 88-SOURCE | www.artisantg.com

Artisan Technology Group - Quality Instrumentation ... Guaranteed | (888) 88-SOURCE | www.artisantg.com

Adept 550 Table-Top Robot

User's Guide

Including Class 10 Clean Room Version and Adept PA-4 Power Chassis

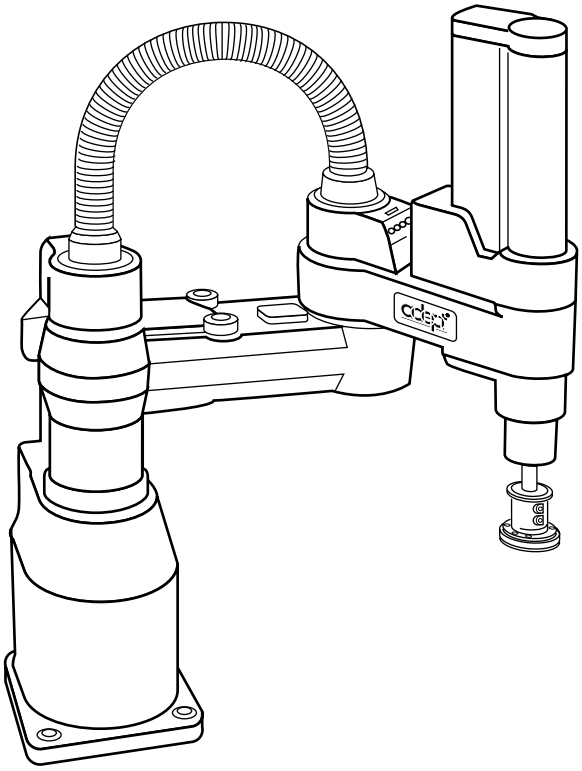

Part Number 00554-00030, Rev A
April 1995

adept technology, inc.

150 Rose Orchard Way • San Jose, CA 95134 • USA • Phone (408) 432-0888 • Fax (408) 432-8707
Otto-Hahn-Strasse 23 • 44227 Dortmund • Germany • Phone 0231/75 89 40 • Fax 0231/75 89 450
11, Voie la Cardon • 91126 • Palaiseau • France • Phone (1) 69.19.16.16 • Fax (1) 69.32.04.62
1-2, Aza Nakahara, Mitsuya-Cho • Toyohashi-Shi 441-31 • Japan • (0532) 65-2391 • Fax (0532) 65-2390

Artisan Technology Group - Quality Instrumentation ... Guaranteed | (888) 88-SOURCE | www.artisantg.com

The information contained herein is the property of Adept Technology, Inc., and shall not be reproduced in whole or in part without prior written approval of Adept Technology, Inc. The information herein is subject to change without notice and should not be construed as a commitment by Adept Technology, Inc. This manual is periodically reviewed and revised.

Adept Technology, Inc., assumes no responsibility for any errors or omissions in this document. Critical evaluation of this manual by the user is welcomed. Your comments assist us in preparation of future documentation. A form is provided at the back of the book for submitting your comments.

Copyright © 1994, 1995 by Adept Technology, Inc. All rights reserved.

The Adept logo is a registered trademark of Adept Technology, Inc.

Adept, AdeptOne, AdeptOne-MV, AdeptThree, PackOne, HyperDrive,
Adept 550, Adept 550 CleanRoom, Adept 1850, Adept 1850XP,
A-Series, S-Series, Adept MC, Adept CC, Adept IC, Adept OC, Adept MV,
AdeptVision, VisionWare, AdeptMotion, MotionWare, PalletWare, AIM,
AdeptNet, AdeptForce, AdeptModules,
and V^+ are trademarks of Adept Technology, Inc.

Any trademarks from other companies used in this publication
are the property of those respective companies.

Printed in the United States of America

Artisan Technology Group - Quality Instrumentation ... Guaranteed | (888) 88-SOURCE | www.artisantg.com

Table of Contents

1 General Information 1

1.1 How to Use This Manual 2

Follow These Steps to Install and Configure the Adept 550 Robot 2
Related Manuals 2
Standard Manuals. 2
Other Adept Product Manuals 3
Optional V+ Developer's Manuals 3

1.2 Warnings, Cautions, and Notes 4

1.3 Safety 4

Reading and Training for Users and Operators 4
System Safeguards. 5
Safety Features on External VME Front Panel (VFP) 5
Computer-Controlled Robots and Motion Devices 5
Manually-Controlled Robots and Motion Devices 5
Other Computer-Controlled Devices. 5

1.4 Robot Modifications 6

Acceptable Modifications 6
Unacceptable Modifications 6

1.5 How Can I Get Help? 7

Within the Continental United States. 7
Service Calls. 7
Application Questions 7
Applications Internet E-Mail Address 7
Training Information 7
Within Europe 7
France 7
Outside Continental United States or Europe. 8
Adept Bulletin Board Service (BBS) 8

2 Robot Overview 9

2.1 Overview 10

2.2 Adept 550 Robot 10

General Description. 10
Joint Motions. 10
Joint 1 10
Joint 2 12
Joint 3 13
Joint 4 13

Artisan Technology Group - Quality Instrumentation ... Guaranteed | (888) 88-SOURCE | www.artisantg.com

Robot Working Envelope 15
Specifications 16
Options 17

3 Power Chassis/Controller Overview 19

3.1 Adept PA-4 Power Chassis 20

Introduction 20
Dimensions 20

3.2 Dual B5 Amplifier Module 21

Connectors and Indicators 21

3.3 Adept MV Controller 22

4 Robot Installation. 23

4.1 Environmental and Facility Requirements 24

Facility Ambient Air Quality 24
Robot Workcell Free Space 24

4.2 Unpacking and Inspecting 24

Before Unpacking 24
After Unpacking 24
Repacking for Relocation 24

4.3 Robot Mounting 25

Mounting Surface 25
Mounting Procedure 25

4.4 User Flange Dimensions. 26

4.5 End-Effectors. 27

4.6 User Connections 28

User Air Lines 28
User Electrical Lines 28

5 Power Chassis Installation 29

5.1 Environmental and Facility Requirements 30

Ambient Air Quality. 30

5.2 Power Chassis Installation 30

Power Chassis Models 30
Connecting to AC Power, Model 3303 Power Chassis. 30
Power Requirements for Model 3303 Power Chassis 30
Connecting Power Cord, Model 3303 Power Chassis 31
Connecting to AC Power, Model 3306 Power Chassis. 32
Power Requirements for Model 3306 Power Chassis 32
Changing Voltage Setting (Model 3306 only) 32
Connecting AC Power Cord, Model 3306 Power Chassis 33

Artisan Technology Group - Quality Instrumentation ... Guaranteed | (888) 88-SOURCE | www.artisantg.com

System Grounding Information 33
Circuit Breaker and Fuse Information 34
Chassis Circuit Breaker 34
Chassis Fuses 34
Amplifier Module Fuses 34
Joining an Adept PA-4 Power Chassis to an Adept MV Controller 34
Joining at the Top 35
Joining at the Bottom 36
Installation in a Rack or Panel Mount 37
Space Around the Chassis 37
Panel Mounting 37
Rack Mounting 37
Removing and Installing Amplifier Modules 39
Removing Amplifier Modules 39
Installing Amplifier Modules 39

5.3 Installing Cables: Robot/Controller/Power Chassis 40

System Cable Connections 40
Connecting Adept 550 Robot to Power Chassis 41
Connecting Robot to Adept MV Controller 44
Connecting Adept MV Controller to Power Chassis 45

6 Operation 47

6.1 Verify Installation 48

Physical Connections 48

6.2 Turn On Controller and Power Chassis 48

6.3 Calibrate Robot 48

About Calibration 49

6.4 Learning to Operate and Program the Adept 550 Robot 49

6.5 Limiting Joint Travel 50

Softstops 50
Hardstops 50

6.6 Brakes 51

Brake Release Button 51

7 Maintenance 53

7.1 Maintenance Schedule 54

7.2 Checking Mounting Bolts and Leveling 54

7.3 Lubricate Joint 3 Ball Screw 54

7.4 Check Tension and Wear On J3 and J4 Drive Belts 55

7.5 Adept PA-4 Power Chassis 59

Fan Filter Inspection and Cleaning 59

Artisan Technology Group - Quality Instrumentation ... Guaranteed | (888) 88-SOURCE | www.artisantg.com

A Dimension Drawings 61

A.1 Dimensions for Adept 550 Robot 62
A.2 Dimensions for Adept PA-4 Power Chassis 63
A.3 Dimensions for Power Chassis and Controller 64
A.4 Mounting Bracket Dimensions 65

B Adept 550 CleanRoom Robot 67

B.1 Introduction 68
Vacuum Specifications 68
B.2 Installation 68
B.3 Adept 550 CleanRoom Robot Dimensions 69

C Dual Adept 550 Robots 71

C.1 Introduction 72
Dual Adept 550 Robot System Description 72
C.2 Installation 72
VMEbus Address for VJI Module 72
Adept PA-4 Power Chassis. 72
Cable Installation (Model 3303, with two power chassis) 73
C.3 Operation with the Manual Control Pendant (MCP) 73
C.4 Programming Information 73
V+ Language Programming 73
V+ Monitor Commands 73
C.5 Emergency Stop Circuit Shuts Off Both Robots. 74

List of Figures

Figure 2-1 Adept 550 Robot Joint Locations. 11
Figure 2-2 Joint 1 Motion 12
Figure 2-3 Robot LEFTY and RIGHTY Configurations 13
Figure 2-4 Joint 3 and Joint 4 Motion. 14
Figure 2-5 Adept 550 Robot Working Envelope 15
Figure 3-1 Adept PA-4 Power Chassis 20
Figure 3-2 Adept MV-8 Controller 22
Figure 4-1 Mounting Hole Pattern (Robot-to-Mounting Surface) 25
Figure 4-2 User Flange Dimensions 26
Figure 4-3 User Flange Close-up Dimensions. 27
Figure 5-1 Power Entry Module on Adept PA-4 Chassis (Model 3303). 31

Artisan Technology Group - Quality Instrumentation ... Guaranteed | (888) 88-SOURCE | www.artisantg.com

Figure 5-2 Joining the Power Chassis and Controller at the Top 35
Figure 5-3 Joining the Power Chassis and Controller at the Bottom. 36
Figure 5-4 Installing Mounting Brackets 38
Figure 5-5 Adept 550 System Cable Installation 40
Figure 5-6 Adept 550 Robot Back Plate and Ground Connections 42
Figure 5-7 Amplifier Modules 1 and 2 in Power Chassis, Model 3303 43
Figure 5-8 Robot to VJI Cable Installation 44
Figure 5-9 Power Chassis to VJI Cable Installation, Model 3303 45
Figure 7-1 Lubrication of Joint 3 Ball Screw 55
Figure 7-2 Location of Access Cover on Underside of Outer Link. 56
Figure 7-3 Location of Joint 3 and Joint 4 Drive Belts 57
Figure 7-4 Close-up View of Joint 3 Brake Assembly. 58
Figure A-1 Adept 550 Robot Top and Side Dimensions. 62
Figure A-2 Adept PA-4 Power Chassis Dimensions. 63
Figure A-3 Power Chassis and Controller Dimensions 64
Figure A-4 Power Chassis and Controller with Mounting Brackets Installed 65
Figure B-1 Adept 550 CleanRoom Robot Top and Side Dimensions. 69

List of Tables

Table 2-1 Specifications 16
Table 4-1 Mounting Bolt Specifications 25
Table 5-1 Adept PA-4 Power Chassis Model 3303 Power Requirements. 30
Table 5-2 Adept PA-4 Power Chassis Model 3306 Power Requirements 32
Table 5-3 AC Power Cord Specifications, Model 3306 Power Chassis 33
Table 6-1 Softstop and Hardstop Specifications 50
Table 7-1 Inspection and Maintenance 54
Table B-1 Adept 550 CleanRoom Robot Vacuum Specifications 68
Table C-1 Typical Robot-VJI-Amplifier Assignments in Dual Adept 550 Robot System . .73

Artisan Technology Group - Quality Instrumentation ... Guaranteed | (888) 88-SOURCE | www.artisantg.com

Artisan Technology Group - Quality Instrumentation ... Guaranteed | (888) 88-SOURCE | www.artisantg.com

General Information 1

1.1 How to Use This Manual 2

Follow These Steps to Install and Configure the Adept 550 Robot 2

Related Manuals 2

Standard Manuals. 2

Other Adept Product Manuals 3

Optional V^+ Developer's Manuals 3

1.2 Warnings, Cautions, and Notes 4

1.3 Safety 4

Reading and Training for Users and Operators 4

System Safeguards. 5

Safety Features on External VME Front Panel (VFP) 5

Computer-Controlled Robots and Motion Devices 5

Manually-Controlled Robots and Motion Devices 5

Other Computer-Controlled Devices. 5

1.4 Robot Modifications 6

Acceptable Modifications 6

Unacceptable Modifications 6

1.5 How Can I Get Help? 7

Within the Continental United States. 7

Service Calls. 7

Application Questions 7

Applications Internet E-Mail Address 7

Training Information 7

Within Europe 7

France 7

Outside Continental United States or Europe. 8

Adept Bulletin Board Service (BBS) 8

Artisan Technology Group - Quality Instrumentation ... Guaranteed | (888) 88-SOURCE | www.artisantg.com

1.1 How to Use This Manual

Follow These Steps to Install and Configure the Adept 550 Robot

1. Read Chapter 1 to learn about Safety and Customer Service issues.
2. Read Chapter 2 to get an overview of the Adept 550 Robot and Chapter 3 for an overview of the Adept PA-4 power chassis.
3. Read Chapter 4 to learn the steps in installing the robot.
4. Read Chapter 5 to learn the steps in installing the power chassis and connecting cables between all components.
5. Read Chapter 6 to find out how to turn on the system and where to find programming information.
6. Read Chapter 7 for periodic maintenance for the system.
7. Read Appendix A for dimension information, Appendix B for CleanRoom information, and Appendix C for Dual Adept 550 robot information.

Related Manuals

Adept products come with a set of documentation that is defined by the products you have ordered. In addition, there are optional manuals available if you are going to be programming the Adept system. This manual refers to both the standard and optional manuals. The following sections give a brief description of the contents and organization of the Adept documentation set.

Standard Manuals

In addition to this *Adept 550 Table-Top Robot User's Guide* the following manuals are shipped with the system:

Manual	Material Covered
Adept MV Controller User's Guide	This manual details the installation, configuration, and maintenance of your Adept controller.
V^+ Operating System User's Guide	A description of the V^+ operating system. Loading, storing, and executing programs is covered in this manual.
Instructions for Adept Utility Programs	Adept provides a series of programs for configuring and calibrating various features of your Adept system. These utility programs are described in this manual.
V^+ Release Notes	Descriptions of the changes to V^+. This document is updated as each version of V^+ is released.

Artisan Technology Group - Quality Instrumentation ... Guaranteed | (888) 88-SOURCE | www.artisantg.com

Other Adept Product Manuals

When you order AdeptVision VME, AdeptMotion VME, AdeptForce VME, or any AIM software product, you will receive manuals that cover those products. Also, optional hardware such as the Manual Control Pendant will come with a manual. A partial list is shown below.

Manual	Material Covered
AdeptVision VME User's Guide	Concepts and strategies for programming the AdeptVision VME system. (see also the optional *AdeptVision Reference Guide* below)
AdeptMotion VME User's Guide	Installation, configuration, and tuning of an AdeptMotion VME system.
AdeptForce VME User's Guide	Installation, operation, and programming of the AdeptForce VME product.
Manual Control Pendant User's Guide	Basic use and programming of the manual control pendant.

Optional V^+ Developer's Manuals

If you will be programming V^+ applications, you should order the optional V^+ developer's manuals (first three in the list below). These manuals contain a complete description of the commands, instructions, functions, and other features available in the V^+ language and operating system. These manuals are essential for advanced applications programming.

If you will be programming vision applications, you should order the *AdeptVision Reference Guide* (in addition to the V^+ developer's manuals).

Manual	Material Covered
V^+ Operating System Reference Guide	Descriptions of the V^+ operating system commands (known as monitor commands).
V^+ Language User's Guide	V^+ is a complete high-level language as well as an operating system. This manual covers programming principles for creating V^+ programs.
V^+ Language Reference Guide	A complete description of the keywords in the basic V^+ language system.
AdeptVision Reference Guide	Descriptions of the additional V^+ keywords available with the AdeptVision VME option.

Artisan Technology Group - Quality Instrumentation ... Guaranteed | (888) 88-SOURCE | www.artisantg.com

1.2 Warnings, Cautions, and Notes

There are three levels of special notation used in this manual. They are:

WARNING: Injury or major equipment damage could result if the actions indicated in a "WARNING" are not complied with. A warning statement typically describes the hazard, its possible effect, and the measures that must be taken to reduce the hazard.

CAUTION: Damage to your equipment could result if the action specified in the "CAUTION" is not complied with.

NOTE: A "NOTE" provides supplementary information, emphasizes a point or procedure, or gives a tip for easier operation.

1.3 Safety

Reading and Training for Users and Operators

Adept systems can include computer-controlled mechanisms that are capable of moving at high speeds and exerting considerable force. Like all robot and motion systems, and most industrial equipment, they must be treated with respect by the user and the operator.

This manual should be read by all personnel who operate or maintain Adept systems, or who work within or near the workcell.

We also recommend you read the *American National Standard for Industrial Robot Systems - Safety Requirements*, published by the Robotic Industries Association(RIA), in conjunction with the American National Standards Institute. The publication, ANSI/RIA R15.06 - 1992, contains guidelines for robot system installation, safeguarding, maintenance, testing, start-up, and operator training. The document is available from the American National Standards Institute, 11 West 42nd Street, #13THF, New York, NY 10036-8002.

This manual assumes that the user has attended an Adept training course and has a basic working knowledge of the system. The user should provide the necessary additional training for all personnel who will be working with the system.

There may be warnings in Adept manuals that specify only skilled or instructed persons should attempt certain procedures. These are defined as:

- **Skilled persons** have technical knowledge or sufficient experience to enable them to avoid the dangers which electricity may create (engineers and technicians).
- **Instructed persons** are adequately advised or supervised by skilled persons to enable them to avoid the dangers which electricity may create (operating and maintenance staff).

Artisan Technology Group - Quality Instrumentation ... Guaranteed | (888) 88-SOURCE | www.artisantg.com

System Safeguards

Safeguards should be an integral part of robot or motion workcell design, installation, operator training, and operating procedures.

Adept systems have various communication features to aid in constructing system safeguards. These include the emergency stop circuitry and digital input and output lines. These features are described in the *Adept MV Controller User's Guide*.

Safety Features on External VME Front Panel (VFP)

On the Adept MV controller, the optional external VME Front Panel (VFP) has three important safety features, the HIGH POWER and PROGRAM RUNNING indicators, and the EMERGENCY STOP switch. If you choose not to use the VFP, you should provide similar safety features by using the Front Panel/MCP and Digital I/O connectors on the System I/O module. Refer to the *Adept MV Controller User's Guide* for more information, or call Adept Customer Service.

WARNING: Entering the workcell when either the HIGH POWER or the PROGRAM RUNNING light is on can result in severe injury. This warning applies to each of the next three sections.

Computer-Controlled Robots and Motion Devices

Adept systems are computer controlled, and the program that is currently running the robot or motion device may cause it to move at times or along paths you may not anticipate. When the HIGH POWER light and the PROGRAM RUNNING light on the optional VFP are illuminated, do not enter the workcell because the robot or motion device might move unexpectedly. (The LAMP TEST button on the VFP allows these lights to be periodically checked.)

Manually-Controlled Robots and Motion Devices

Adept robots and other motion devices can also be controlled manually when the HIGH POWER light on the VFP is illuminated. When this light is lit, motion can be initiated from the system keyboard or from the optional Manual Control Pendant (MCP). If you have to enter the workcell when this light is lit, press the MAN/HALT button on the MCP. This will prevent anyone else from initiating unexpected motion from the system keyboard.

Other Computer-Controlled Devices

In addition, Adept systems can be programmed to control equipment or devices other than the robot or main motion device. The program controlling these other devices may cause them to operate unexpectedly. Make sure that safeguards are in place to prevent personnel from entering the workcell when a program is running.

Adept Technology highly recommends the use of additional safety features such as light curtains, safety gates, or safety floor mats to prevent entry to the workcell while HIGH POWER is enabled. These devices can be connected using the emergency stop circuitry.

Artisan Technology Group - Quality Instrumentation ... Guaranteed | (888) 88-SOURCE | www.artisantg.com

1.4 Robot Modifications

It is often necessary to make modifications to Adept robots to successfully integrate them into a workcell. Unfortunately, many seemingly simple modifications can either cause a robot failure, or reduce the robot's performance, reliability, or lifetime.

Acceptable Modifications

In general, the following robot modifications will not cause any problems, but may affect robot performance:

- Attaching tooling, utility boxes, solenoid packs, vacuum pumps, screwdrivers, cameras, lighting, etc. to the inner link, outer link, or column. Any loads attached to the moving robot parts must be considered part of the payload.
- Attaching hoses, pneumatic lines, or cables to the robot. These should be designed so they do not restrict joint motion or cause robot motion errors.
- Modifying robot access covers as long as adequate protection is provided after the modification.

Unacceptable Modifications

If not done properly, the modifications listed below will damage the robot, reduce system reliability, or shorten the life of the robot.

CAUTION: Making any of the modifications outlined below will void the warranty of any components that Adept determines were damaged due to the modification. Please contact Adept Customer Service before attempting any of the following modifications to determine if they can be made without causing problems.

- Modifying any of the robot harnesses or robot to controller cables.
- Modifying any drive system components.
- Modifying, including drilling or cutting, any robot casting.
- Modifying any robot electrical component or PC board other than those explicitly stated in the robot user's guide.
- Routing additional hoses, air lines, or wires through the robot.

Artisan Technology Group - Quality Instrumentation ... Guaranteed | (888) 88-SOURCE | www.artisantg.com

1.5 How Can I Get Help?

Within the Continental United States

Adept Technology maintains a Customer Service Center at its headquarters in San Jose, CA. The phone numbers are:

Service Calls

(800) 232-3378 (24 hours per day, 7 days a week)
(408) 433-9462 FAX

Application Questions

(800) 232-3378 (Monday to Friday, 8:00 a.m. to 5:00 p.m., Pacific time)
(408) 434-6248 FAX

Applications Internet E-Mail Address

If you have access to the Internet, you can send applications questions by e-mail to:

applications@adept.com

This method also enables you to attach a file, such as a portion of V^+ program code, to your message.

Training Information

For information regarding Adept Training Courses in the USA, please call (408) 434-5024.

Within Europe

For European customers outside of France, Adept Technology maintains a Customer Service Center in Dortmund, Germany. The phone numbers are:

(49) 231 / 75 89 40 from within Europe (Monday to Friday, 8:00 a.m. to 5:00 p.m., CET)
(49) 231 / 75 89 450 FAX

France

For customers in France, Adept Technology maintains a Customer Service Center in Paris, France. The phone numbers are:

(33) 1 69 19 16 16 (Monday to Friday, 8:30 a.m. to 5:30 p.m., CET)
(33) 1 69 32 04 62 FAX

Artisan Technology Group - Quality Instrumentation ... Guaranteed | (888) 88-SOURCE | www.artisantg.com

Outside Continental United States or Europe

For service calls, application questions, and training information, call the Adept customer service center in San Jose, California USA:

(408) 434-5000
(408) 433-9462 FAX (service requests)
(408) 434-6248 FAX (application questions)

> **NOTE:** When calling with a controller related question, please have the serial number of the controller. If your system includes an Adept robot, also have the serial number of the robot. The serial numbers can be determined by using the ID command (see the *V^+ Operating System User's Guide*).

Adept Bulletin Board Service (BBS)

Adept maintains a bulletin board service for Adept customers. Adept posts application hints and utilities to this bulletin board and users may post their own hints and application notes. There is no charge for access to the bulletin board. The BBS number is (203) 264-5590. The first time you call you will be able to set up an account right from the BBS. If you have any questions, call (800) 232-3378 and ask about the BBS.

Artisan Technology Group - Quality Instrumentation ... Guaranteed | (888) 88-SOURCE | www.artisantg.com

Robot Overview 2

2.1 Overview 10

2.2 Adept 550 Robot 10

General Description. 10
Joint Motions. 10
Joint 1 10
Joint 2 12
Joint 3 13
Joint 4 13
Robot Working Envelope 15
Specifications 16
Options 17

Artisan Technology Group - Quality Instrumentation ... Guaranteed | (888) 88-SOURCE | www.artisantg.com

2.1 Overview

The Adept 550 Table-Top Robot system consists of three major components:

- the Adept 550 Table-Top Robot
- the Adept PA-4 Power Chassis
- the Adept MV-8 or MV-19 Controller

This chapter gives an overview of the Adept 550 robot. See Chapter 3 for an overview of the Adept PA-4 power chassis.

2.2 Adept 550 Robot

General Description

The Adept 550 robot is a four-axis SCARA (Selective Compliance Assembly Robot Arm) robot. Joints 1, 2, and 4 are rotational and Joint 3 is translational. See Figure 2-1 for an overview of the robot joint locations, Figure 2-5 for the operating envelope, and Table 2-1 for specifications.

Programming and control of the Adept 550 robot is accomplished through the Adept MV Controller.

Joint Motions

Joint 1

Joint 1, also referred to as the “shoulder,” provides rotation of the inner link. Joint 1 motion is limited to ±100°. See Figure 2-2.

Artisan Technology Group - Quality Instrumentation ... Guaranteed | (888) 88-SOURCE | www.artisantg.com

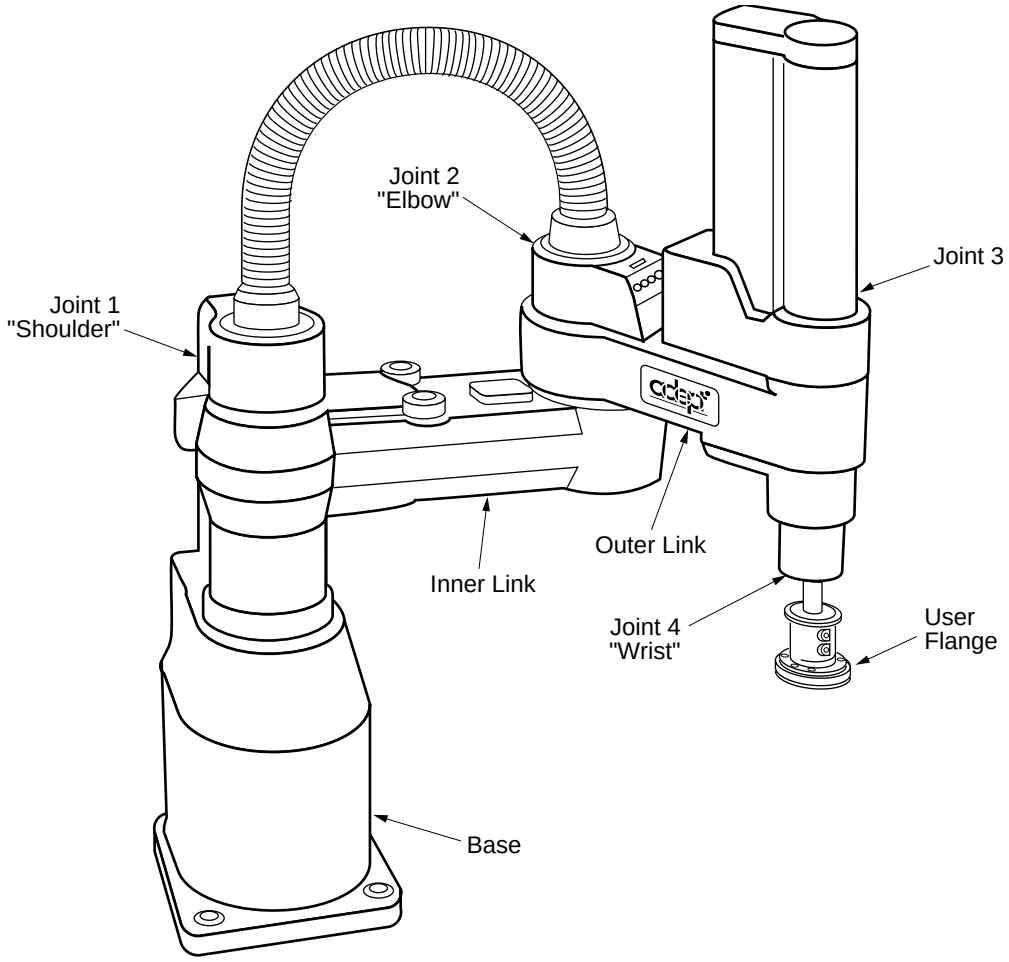

Figure 2-1. **Adept 550 Robot Joint Locations**

Artisan Technology Group - Quality Instrumentation ... Guaranteed | (888) 88-SOURCE | www.artisantg.com

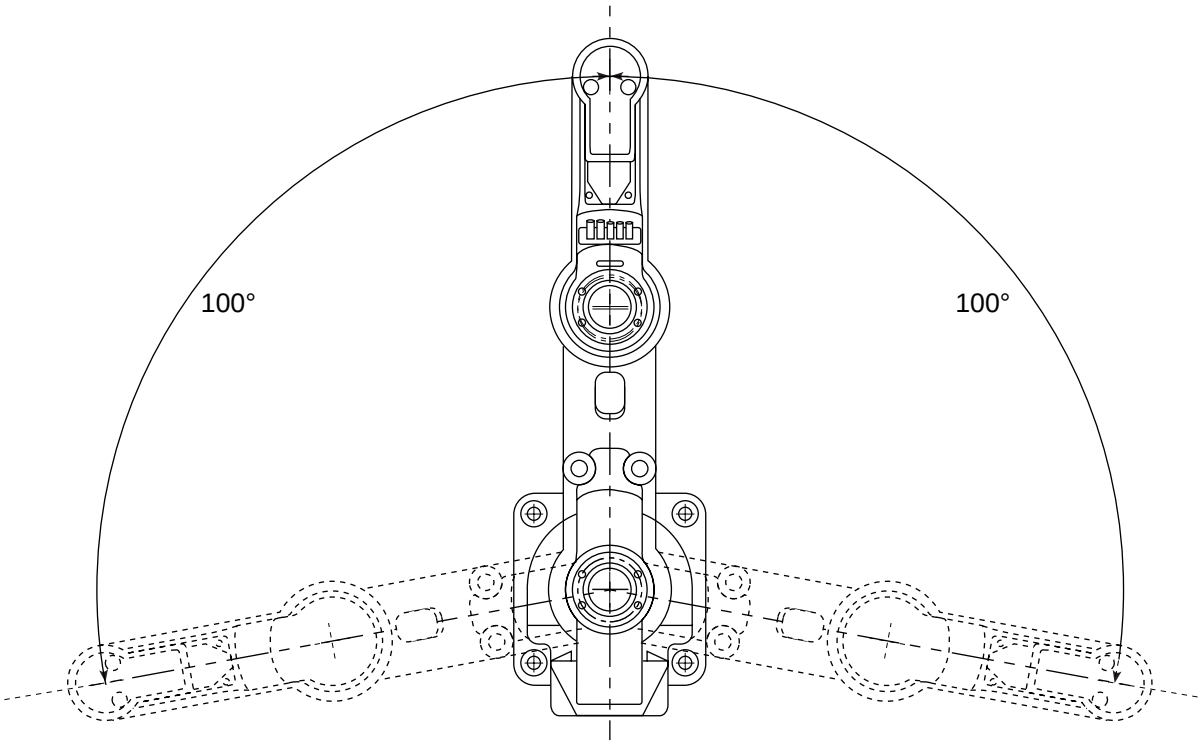

Figure 2-2. **Joint 1 Motion**

Joint 2

Joint 2, also referred to as the “elbow,” provides rotation of the outer link.

Joint 2 motion is limited to ±140°. Joint 2’s motion is similar to an elbow capable of acting in both left- and right-hand configurations (see Figure 2-3).

When you teach a robot location, the robot elbow (when viewed from the back of the robot) will be pointing either to the left or right. These arm orientations are referred to as “Lefty” and “Righty.” In Figure 2-3, the dotted outline is in a lefty configuration and the solid outline is in a righty configuration. Under program control, the robot will always move to the next location in its current configuration (lefty or righty) unless the location is a “precision point” or the LEFTY or RIGHTY program instruction is used.

For further information concerning right- and left-hand configuration, refer to the *V^+ Language User’s Guide*.

Artisan Technology Group - Quality Instrumentation ... Guaranteed | (888) 88-SOURCE | www.artisantg.com

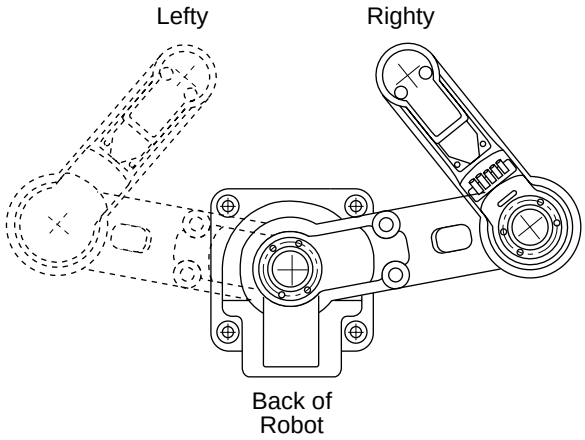

Figure 2-3. **Robot LEFTY and RIGHTY Configurations**

Joint 3

Joint 3 provides vertical translation of the quill. Joint 3 drives the quill to up and down with a maximum stroke of 200 mm (7.9”). See Figure 2-4.

The Adept 550 Cleanroom robot has a maximum Joint 3 stroke of 180 mm; see Appendix B.

Joint 4

Joint 4, also referred to as the “wrist”, provides for rotation of the quill. Joint 4 does not have hardstops, but software limits its motion to ±180° (see Figure 2-4). Also see Table 6-1 for additional information on Joint 4 softstops.

Artisan Technology Group - Quality Instrumentation ... Guaranteed | (888) 88-SOURCE | www.artisantg.com

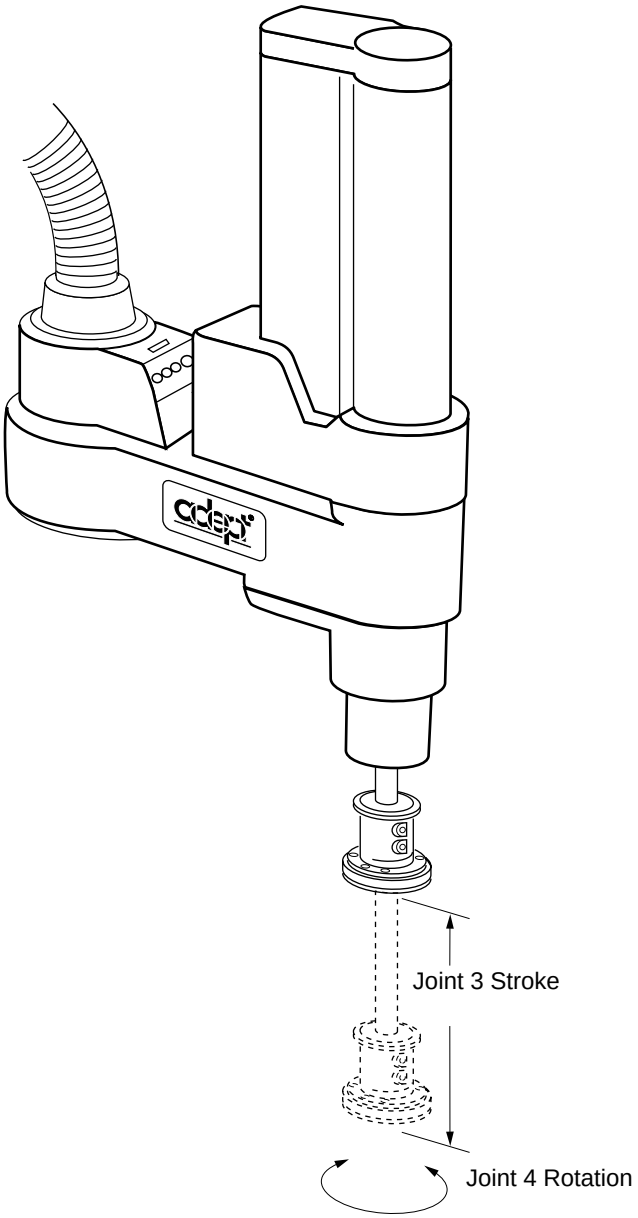

Figure 2-4. **Joint 3 and Joint 4 Motion**

Artisan Technology Group - Quality Instrumentation ... Guaranteed | (888) 88-SOURCE | www.artisantg.com

Robot Working Envelope

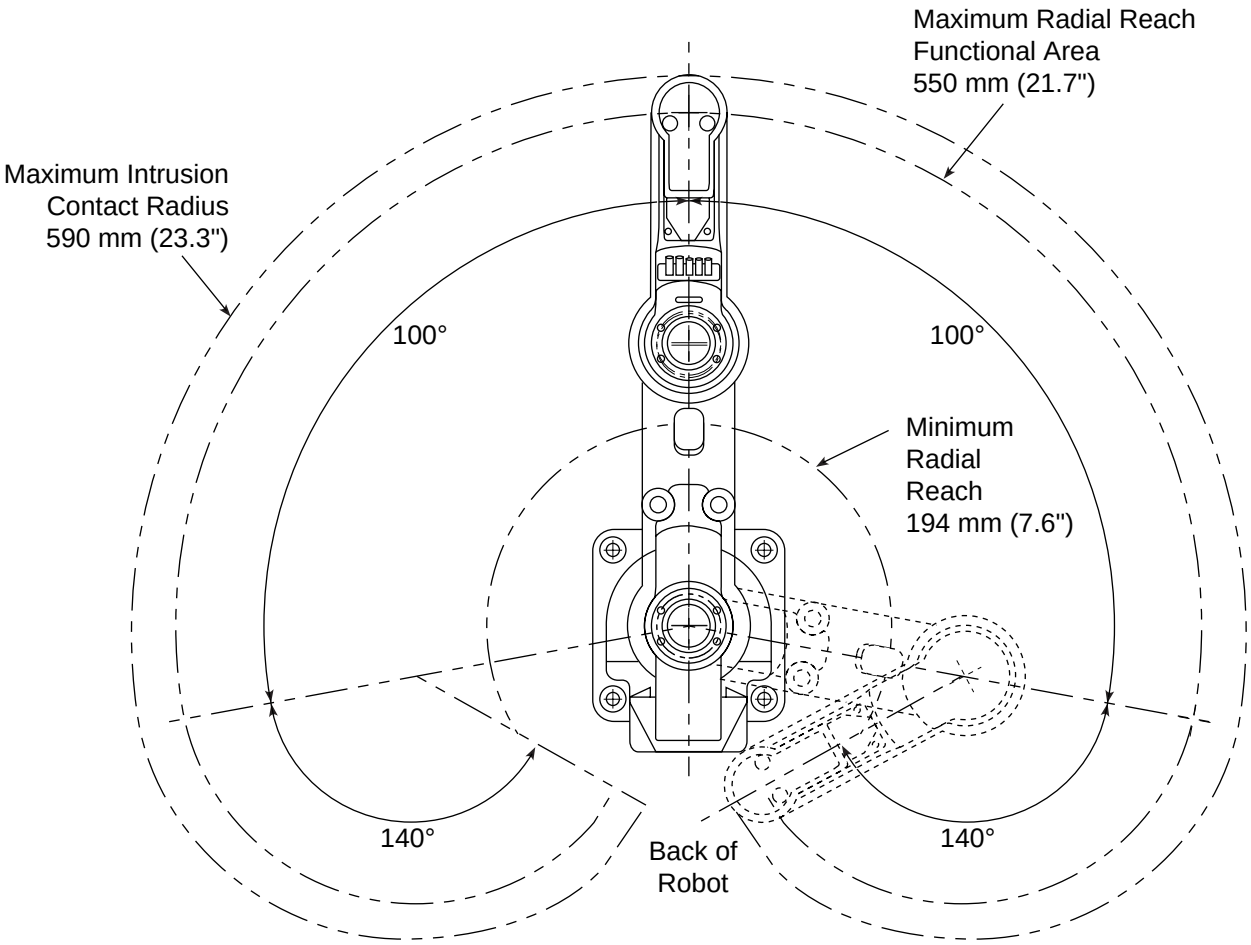

Figure 2-5. **Adept 550 Robot Working Envelope**

NOTE: See Appendix A for robot and power chassis dimension information.

Artisan Technology Group - Quality Instrumentation ... Guaranteed | (888) 88-SOURCE | www.artisantg.com

Specifications

All specifications are subject to change without notice.

Table 2-1. **Specifications**

Adept 550 Robot Specifications	
Reach	
Maximum radial	550 mm (21.7")
Minimum radial	194 mm (7.6")
Vertical clearance (bottom of base to end of quill) • with maximum joint 3 retraction • with maximum joint 3 extension	 336 mm (13.2") 136 mm (5.3")
Vertical Stroke	
Joint 3 (Z direction)	200 mm (7.9")
Joint Rotation	
Joint 1	±100°
Joint 2	±140°
Joint 4	±360°
Maximum Payload (including end effector and arm-mounted tooling)	
During operation	5.5 kg (12.1 lb)
Inertia Load	
About Joint 4 axis (maximum)	450 $kgcm^2$ (150 $lb\text{-}in^2$)
Force	
Joint 3 downward force (minimum) without payload	12.1 kg (26.6 lb)
Cycle Time[a]	
2 kg (4.4 lb)	0.8 seconds
Resolution	
Joint 1	0.0008° per encoder count
Joint 2	0.0012° per encoder count
Joint 3 (vertical Z)	0.0022 mm per encoder count
Joint 4 (tool rotation)	0.0012° per encoder count
Repeatability (at constant temperature)	
X,Y plane	± 0.025 mm (±0.001")
Joint 3 (vertical Z)	±0.03 mm (±0.001")
Joint 4 (rotational)	±0.05°

Artisan Technology Group - Quality Instrumentation ... Guaranteed | (888) 88-SOURCE | www.artisantg.com

Table 2-1. **Specifications (Continued)**

Adept 550 Robot Specifications	
Maximum Joint Speed (with 2 kg payload)	
Joint 1	270° / sec
Joint 2	430° / sec
Joint 3	1000 mm / sec (40" / sec)
Joint 4	480° / sec
Weight	
Robot without options	approximately 45 kg (100 lb)
Power chassis, with two amplifier modules	approximately 14.5 kg (32 lb)

[a] The robot tool performs continuous path, straight-line motions 25 mm (1") up, 305 mm (12") over, 25 mm (1") down, and back along the same path. COARSE is enabled and BREAKs are used at each end location. Not achievable over all paths.

Options

The Adept 550 is compatible with the following Adept options:

- AdeptVision VME systems
- Robot-mounted camera hardware
- Extended robot-to-controller cables (10 m [32.8 ft])
- AdeptForce VME
- Adept 550 Class 10 CleanRoom Model available (See Appendix B)
- Dual Adept 550 robot systems available (See Appendix C)

Artisan Technology Group - Quality Instrumentation ... Guaranteed | (888) 88-SOURCE | www.artisantg.com

Artisan Technology Group - Quality Instrumentation ... Guaranteed | (888) 88-SOURCE | www.artisantg.com

Power Chassis/Controller Overview 3

3.1 Adept PA-4 Power Chassis 20

Introduction 20

Dimensions 20

3.2 Dual B5 Amplifier Module 21

Connectors and Indicators. 21

3.3 Adept MV Controller 22

Artisan Technology Group - Quality Instrumentation ... Guaranteed | (888) 88-SOURCE | www.artisantg.com

3.1 Adept PA-4 Power Chassis

Introduction

The Adept PA-4 power chassis provides amplified power signals to drive the robot motors in an Adept 550 robot system. The amplifier modules in the Adept PA-4 power chassis receive control signals from the Adept MV controller. The amplifier modules then drive the various robot joint motors at the level commanded by the controller.

The Adept PA-4 chassis is cooled by a fan located in the lower front section. Incoming air is cleaned by a reusable filter.

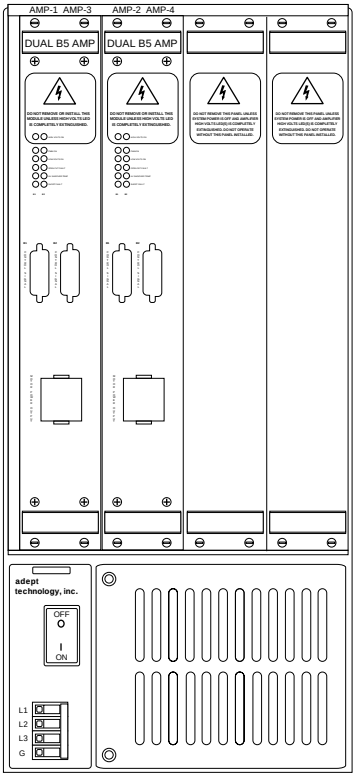

Figure 3-1. **Adept PA-4 Power Chassis**

Dimensions

For dimensions of the Adept PA-4 power chassis, see Appendix A.

Artisan Technology Group - Quality Instrumentation ... Guaranteed | (888) 88-SOURCE | www.artisantg.com

3.2 Dual B5 Amplifier Module

The Dual B5 Amplifier module is a plug-in module that contains the circuitry and amplifying components to drive two of the motors in an Adept 550 robot. Each Dual B5 amplifier can drive one major axis (J1 or J2) and one minor axis (J3 or J4).

In a typical Adept 550 robot system, there are two identical Dual B5 Amplifier modules in the Adept PA-4 power chassis. The amplifier module on the left-hand side, called Module 1, drives motors 1 and 3. The amplifier module on the right-hand side, called Module 2, drives motors 2 and 4.

Connectors and Indicators

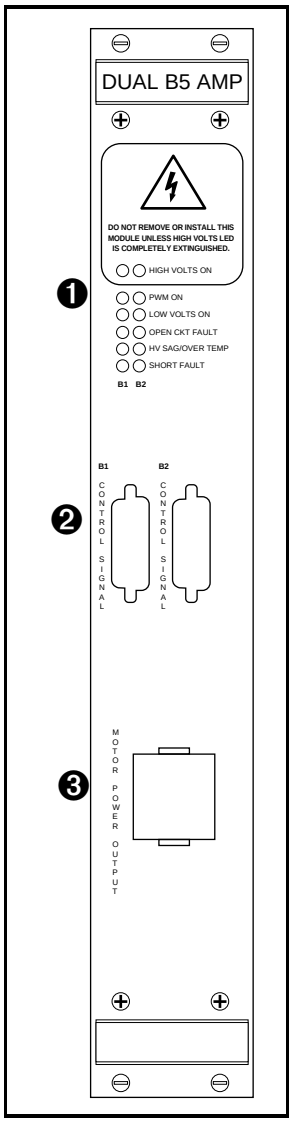

❶ Status LEDs. The left-hand column of LEDs is for the first motor controlled by this module; the right-hand column is for the second motor controlled by this module. When an LED is turned on it indicates the following conditions:

High Volts On indicates the high voltage to the amps is turned on.

PWM On indicates that current servo is on. It does not go on until calibration is complete.

Low Volts On indicates the low voltage supply in the power chassis is on.

Open Ckt Fault indicates that an open circuit in the motor leads has been detected.

HV Sag/Over Temp indicates that either the input voltage has dropped below the specified level or an over-temperature fault has been detected on an amplifier module.

Short Fault indicates that an over-current in the motor leads has been detected.

❷ **Control Signal** connector – the “VJI to Amp” cable connectors are installed here. See Chapter 5 for more details.

❸ **Motor Power Output** connector – the “motor power” cable is installed here. See Chapter 5 for more details.

Artisan Technology Group - Quality Instrumentation ... Guaranteed | (888) 88-SOURCE | www.artisantg.com

3.3 Adept MV Controller

The Adept MV-8 (or MV-19) controller contains the various VME modules that control the robot system and run the V^+ Operating System and Programming Language. See the *Adept MV Controller User's Guide* for information on this product.

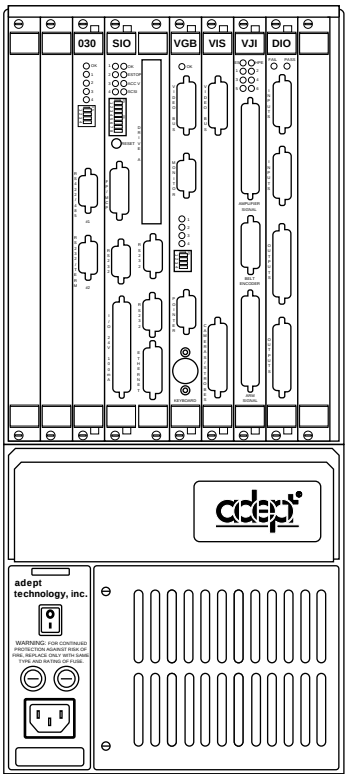

Figure 3-2. **Adept MV-8 Controller**

Artisan Technology Group - Quality Instrumentation ... Guaranteed | (888) 88-SOURCE | www.artisantg.com

Robot Installation 4

4.1 Environmental and Facility Requirements 24

Facility Ambient Air Quality. 24

Robot Workcell Free Space 24

4.2 Unpacking and Inspecting 24

Before Unpacking 24

After Unpacking 24

Repacking for Relocation 24

4.3 Robot Mounting 25

Mounting Surface 25

Mounting Procedure 25

4.4 User Flange Dimensions 26

4.5 End-Effectors 27

4.6 User Connections 28

User Air Lines 28

User Electrical Lines 28

Artisan Technology Group - Quality Instrumentation ... Guaranteed | (888) 88-SOURCE | www.artisantg.com

4.1 Environmental and Facility Requirements

Facility Ambient Air Quality

Temperature: 5° to 40° C (41° to 104° F)

Relative humidity: 5 to 90% non-condensing

Robot Workcell Free Space

The workcell design should allow the Adept 550 freedom of movement within the area specified in Figure 2-5. Additional allowances maybe required to accommodate any installed end-of-arm tooling.

4.2 Unpacking and Inspecting

Before Unpacking

Carefully inspect all shipping crates for evidence of damage during transit. Pay special attention to tilt and shock indication labels (if they are present) on the exteriors of the containers. If any damage is indicated, request that the carrier's agent be present at the time the container is unpacked.

After Unpacking

Compare the actual items received (not just the packing slip) with your equipment purchase order and verify that you received everything you ordered.

Inspect each item for external damage as it is removed from its container. If any damage is evident, contact Adept at the number listed in Chapter 1.

Retain all containers and packaging materials. These items will be necessary to settle damage claims or to relocate the robot.

Repacking for Relocation

If you relocate the robot, reverse the installation procedures that follow this section. Reuse all original packing containers and materials, and follow all safety notes used for installation. Improper packaging for shipment will void your warranty.

CAUTION: The Adept 550 robot with the inner and outer links fully extended has a center of gravity beyond its base. If an unmounted Adept 550 is fully extended, it may fall and cause substantial damage. Always fold the links in towards the center if the robot is not mounted.

Artisan Technology Group - Quality Instrumentation ... Guaranteed | (888) 88-SOURCE | www.artisantg.com

4.3 Robot Mounting

Mounting Surface

The Adept 550 is designed to be mounted on a smooth, flat, level tabletop. The mounting structure must be rigid enough to prevent vibration and flexing during robot operation. Excessive vibration or mounting flexure will degrade robot performance. Figure 4-1 shows the mounting hole pattern for the Adept 550.

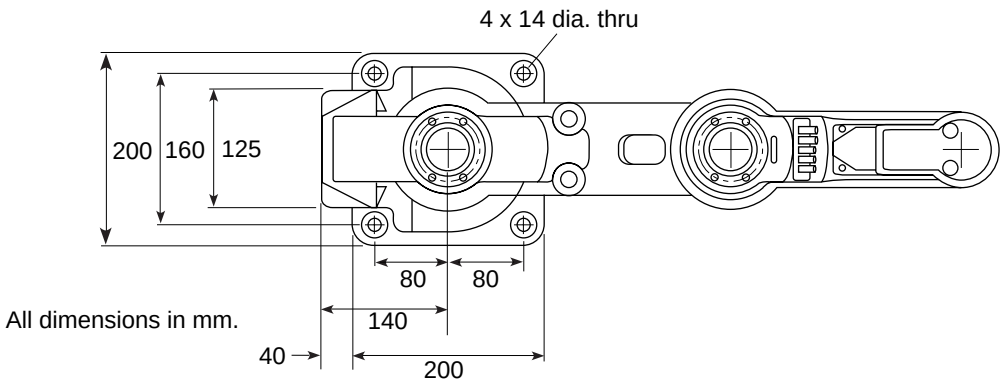

Figure 4-1. **Mounting Hole Pattern (Robot-to-Mounting Surface)**

Mounting Procedure

1. Using the dimensions shown in Figure 4-1, drill and tap the surface for four 7/16 - 14 UNC x 1.50" or a metric size of M12 - 1.75 x 36mm machine bolts (bolts not provided). See Table 4-1 for bolt and torque specifications.
2. Place the robot on the mounting surface and secure it with four bolts. Tighten bolts to 700 Kgfcm (50 ft-lb).
3. Move joints 1, 2, 3, and 4 through their range of motion and check for significant binding or roughness. You will need to use the Brake Release button to move Joint 3; see Chapter 6. If you encounter any problems, contact Adept Customer Service.

   NOTE: Check the tightness of the mounting bolts one week after initial installation, and then recheck every 6 months. See Chapter 7 for periodic maintenance.

Table 4-1. **Mounting Bolt Specifications**

Standard	Size	Specification	Torque
Metric	M12 x P1.75	ISO Property Class 8.8	700 kgfcm
SAE	7/16-14 UNC	SAE Grade 5	50 ft-lb

Artisan Technology Group - Quality Instrumentation ... Guaranteed | (888) 88-SOURCE | www.artisantg.com

4.4 User Flange Dimensions

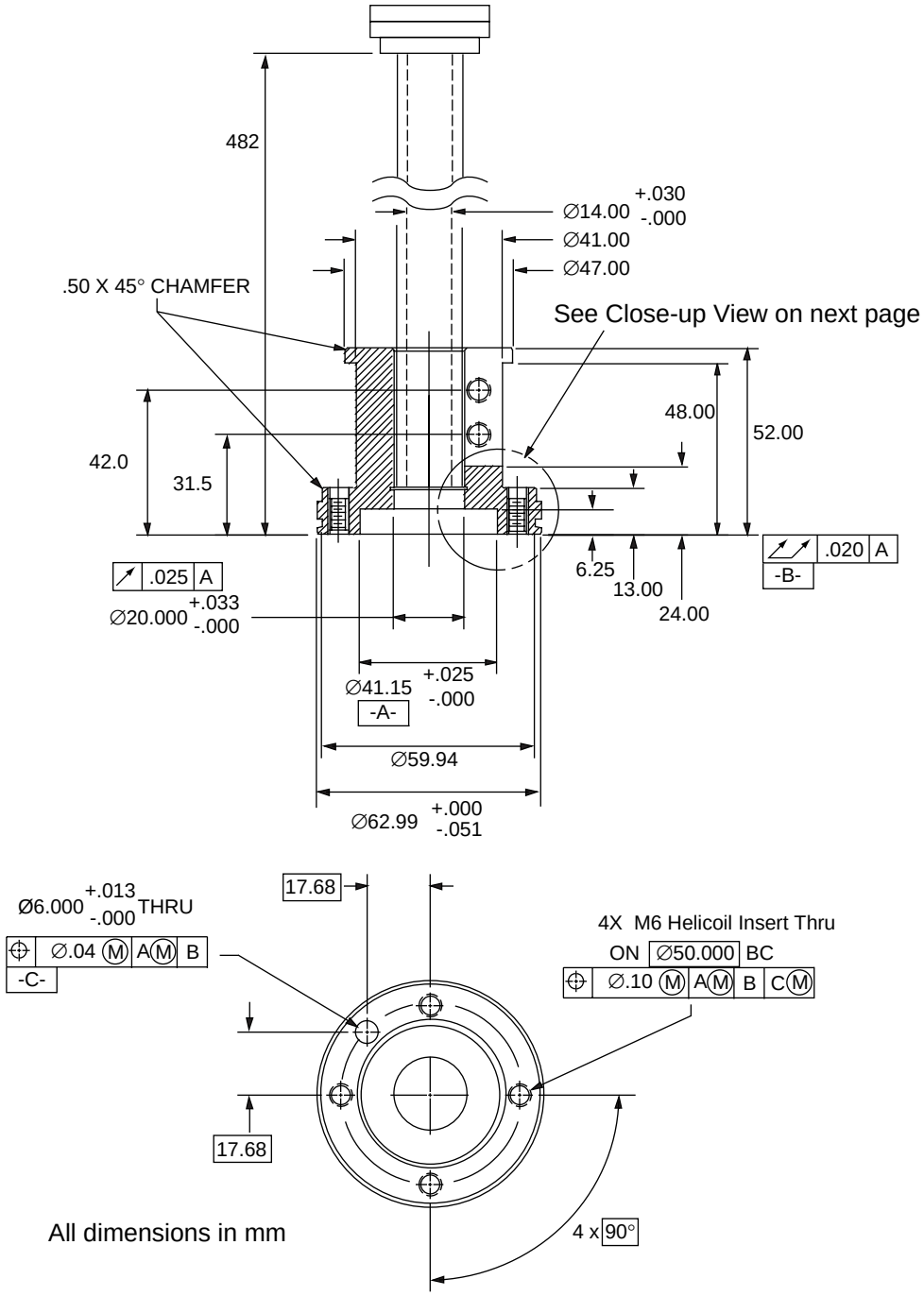

Figure 4-2. **User Flange Dimensions**

Artisan Technology Group - Quality Instrumentation ... Guaranteed | (888) 88-SOURCE | www.artisantg.com

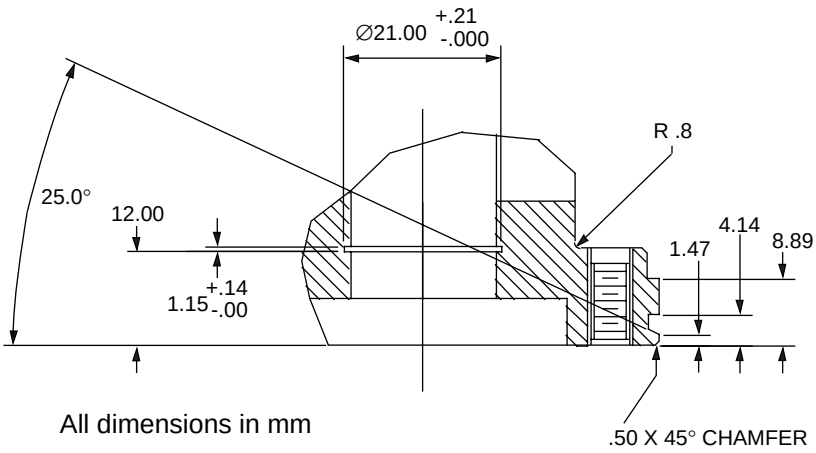

Figure 4-3. **User Flange Close-up Dimensions**

4.5 End-Effectors

The User is responsible for providing and installing any end-effector or other end-of-arm tooling. End-effectors can be attached to the user flange using either four M6 screws or a ring clamp; hardware for both are supplied in the accessories kit.

An M6 x 12 mm dowel pin is also supplied in the accessories kit. This dowel pin fits in the through hole in the user flange and can be used as a keying or anti-rotation device in a user-designed end-effector.

Artisan Technology Group - Quality Instrumentation ... Guaranteed | (888) 88-SOURCE | www.artisantg.com

4.6 User Connections

User Air Lines

There are five user air line connectors on the robot back panel. The five air lines run through the robot up to another set of five matching connectors on the top of the outer link.

The two larger connectors are 6 mm diameter.

The three smaller connectors are 4 mm diameter.

User Electrical Lines

There is a 25-pin male connector on the back panel of the robot for user electrical lines. This connector is wired directly to a 25-pin female connector on the top of the outer link. These connectors can be used to run user electrical signals from the back panel, through the robot, and up to the outer link.

Artisan Technology Group - Quality Instrumentation ... Guaranteed | (888) 88-SOURCE | www.artisantg.com

Power Chassis Installation 5

5.1 Environmental and Facility Requirements 30

Ambient Air Quality 30

5.2 Power Chassis Installation 30

Power Chassis Models 30

Connecting to AC Power, Model 3303 Power Chassis 30

Power Requirements for Model 3303 Power Chassis 30

Connecting Power Cord, Model 3303 Power Chassis 31

Connecting to AC Power, Model 3306 Power Chassis 32

Power Requirements for Model 3306 Power Chassis 32

Changing Voltage Setting (Model 3306 only). 32

Connecting AC Power Cord, Model 3306 Power Chassis 33

System Grounding Information. 33

Circuit Breaker and Fuse Information 34

Chassis Circuit Breaker 34

Chassis Fuses 34

Amplifier Module Fuses. 34

Joining an Adept PA-4 Power Chassis to an Adept MV Controller 34

Joining at the Top 35

Joining at the Bottom 36

Installation in a Rack or Panel Mount 37

Space Around the Chassis. 37

Panel Mounting 37

Rack Mounting 37

Removing and Installing Amplifier Modules 39

Removing Amplifier Modules 39

Installing Amplifier Modules. 39

5.3 Installing Cables: Robot/Controller/Power Chassis 40

System Cable Connections 40

Connecting Adept 550 Robot to Power Chassis 41

Connecting Robot to Adept MV Controller 44

Connecting Adept MV Controller to Power Chassis 45

Artisan Technology Group - Quality Instrumentation ... Guaranteed | (888) 88-SOURCE | www.artisantg.com

5.1 Environmental and Facility Requirements

Ambient Air Quality

Temperature: 5° to 40° C (41° to 104° F)

Relative humidity: 5 to 90% non-condensing

When the Adept PA-4 is installed in a user-supplied cabinet, you must provide adequate cooling to maintain the above requirements.

5.2 Power Chassis Installation

See also Chapter 3 for an overview of the power chassis and amplifiers.

Power Chassis Models

There are two models of the Adept PA-4 power chassis used with the Adept 550 robot — Model 3303 and Model 3306. The model number is the 4-digit prefix of the chassis serial number. This is displayed on a small label on the front of the chassis, just above the on / off power switch. (The serial number and voltage ratings are also displayed on a bar-code on the main rating plate, which is located on the side of the chassis.) The power chassis serial number prefix will be either 3303 or 3306.

Connecting to AC Power, Model 3303 Power Chassis

Power Requirements for Model 3303 Power Chassis

The Adept PA-4 Model 3303 is recommended to be used with three-phase 208-240V, if available. It can also be operated from single-phase 220V-240V, but this single-phase operation is limited to a single Adept 550 robot. Any other robot configurations require three-phase operation.

Table 5-1. **Adept PA-4 Power Chassis Model 3303 Power Requirements**

Nominal Voltage Range	Frequency/ Phasing	Minimum Operating Voltage	Maximum Operating Voltage	Recommended External Circuit Breaker (user-supplied)
208V to 240V	50-60Hz, **3-phase**	188V	264V	20 amps
208V to 240V	50-60Hz, **1-phase**	188V	264V	20 amps

If your facility voltage is outside the range listed above, you must supply an external transformer. Model 3303 is *not* configurable for other voltages.

Artisan Technology Group - Quality Instrumentation ... Guaranteed | (888) 88-SOURCE | www.artisantg.com

Connecting Power Cord, Model 3303 Power Chassis

The AC power cord must be supplied by the user. The cord has to be rated to handle the voltage requirements listed above. The current rating should equal or exceed that of the user's circuit breaker. The cord must meet all applicable local and national codes and regulations for current/voltage ratings, wire gauge, colors, etc.

Connect the user-supplied power cord to the power entry module at the lower left side of the front of the chassis as described in the following procedure. See Figure 5-1.

1. Prepare the user-supplied power cord by removing 7 mm of insulation from each of the four wires. (Three wires for 1-phase.)
2. Loosen the screws in the terminals at the power entry module. Insert the individual wire ends of the cord into the correct terminals; see Figure 5-1.
   a. **For 3-phase operation:** connect to the L1, L2, L3, and G (ground) terminals.
   b. **For 1-phase operation:** connect to the L (line), N (neutral), and G (ground) terminals. If the PA-4 chassis is marked for 3-phase, you can connect to 1-phase by connecting your Line to L1, Neutral to L2, and ground to G. Do not connect to the L3 terminal when using single-phase power.

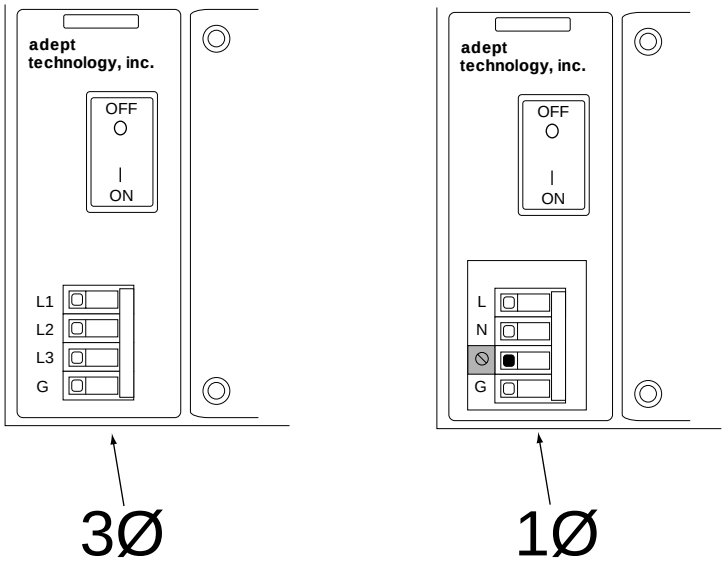

Figure 5-1. **Power Entry Module on Adept PA-4 Chassis (Model 3303)**

3. Tighten the terminal screws to clamp the wire into the terminal. Pull on the cord to make sure the connection is secure.
4. Locate the power entry safety shield, warning label, and two M2.5 x 8mm screws and washers in the accessories kit. Apply the warning label to the shield.
5. Install the power entry safety shield over the terminals using the two screws and washers.

Artisan Technology Group - Quality Instrumentation ... Guaranteed | (888) 88-SOURCE | www.artisantg.com

WARNING: Failure to install the power entry safety shield on the Model 3303 Power Chassis will expose dangerous voltages that could cause injury or death.

NOTE: The Adept PA-4 power chassis is typically used with the Adept MV controller, which has its own separate AC connection. The MV controller chassis must be connected to single-phase AC power. See the *Adept MV Controller User's Guide* for installation information.

Connecting to AC Power, Model 3306 Power Chassis

Power Requirements for Model 3306 Power Chassis

Table 5-2. **Adept PA-4 Power Chassis Model 3306 Power Requirements**[a]

Nominal Voltage Range	Frequency/ Phasing	Minimum Operating Voltage	Maximum Operating Voltage	Recommended External Circuit Breaker (user-supplied)
380 to 415 VAC	50-60Hz, **3-phase only**	342 VAC	456 VAC	20 amps
200 to 240 VAC	50-60Hz, **3-phase only**	180 VAC	264 VAC	20 amps

[a] Specifications for Model 3306 Power Chassis are preliminary.

Changing Voltage Setting (Model 3306 only)

The Adept PA-4 power chassis is shipped from the factory configured for either 380-415 VAC or 200-240 VAC operation, depending on your sales order. Verify that the setting matches your facility power before installation. This chassis is designed for 3-phase operation only.

If you need to change the AC voltage setting from 380-415V to 200-240V (or vice versa), you must move a voltage selector located on the power control board behind the air filter. This procedure must be done only by a skilled or instructed person and should be performed before installing the power chassis.

1. Make sure the Adept PA-4 power chassis and Adept MV controller are turned off and completely disconnected from the AC power source.
2. Open the front air-intake grill by loosening two screws and swinging the grill out.
3. Inspect the voltage setting; it is marked on the voltage selector. To change the voltage setting, remove the selector, rotate it so the required setting is shown, and replace it.

WARNING: Verify the voltage setting is correct before turning on power. Operating the Adept PA-4 power chassis with incorrect voltage settings can cause damage or injury. The voltage settings for the Adept MV controller must be changed separately; see the *Adept MV Controller User's Guide*.

Artisan Technology Group - Quality Instrumentation ... Guaranteed | (888) 88-SOURCE | www.artisantg.com

4. Close the grill and secure the two screws.
5. Clearly mark or alter the ID label (on the side of the chassis) to show the new voltage configuration.

Connecting AC Power Cord, Model 3306 Power Chassis

For the Model 3306, the 3-phase AC power cord is permanently attached to the controller. Connect each conductor of the power cord securely to your AC power source, using the color code below. The installation must meet all applicable local and national codes and regulations. See the next section for important information on system grounding.

Table 5-3. **AC Power Cord Specifications, Model 3306 Power Chassis**

Cord length	3 meters ±0.1 m (9 ft. 10 in. ±4 in.)
Cord rating	25 amps
Number and size of conductor size	5 x 2.5 mm^2
Color code: 380 - 415 VAC line 1 line 2 line 3 neutral ground	 black black brown blue green / yellow
Color code: 200 - 240 VAC line 1 line 2 line 3 **no connection** ground	 black black brown **blue** green / yellow

NOTE: The Adept PA-4 power chassis is typically used with the Adept MV controller, which has its own separate AC connection. The Adept MV controller chassis must be connected to single phase AC power. See the *Adept MV Controller User's Guide* for installation information.

System Grounding Information

Model 3303: The protective ground terminal (marked **G**) is internally connected to the accessible metal parts of the power chassis. To ensure electrical-shock protection, this must be connected to a properly grounded power source.

Model 3306: The protective ground conductor (colored green / yellow) is internally connected to the accessible metal parts of the power chassis. To ensure electrical-shock protection, this must be connected to a properly grounded power source.

WARNING: Ensure that a proper protective ground connection exists before turning on the power. The Adept PA-4 power chassis and the Adept MV controller must be connected to the same earth ground.

Artisan Technology Group - Quality Instrumentation ... Guaranteed | (888) 88-SOURCE | www.artisantg.com

Circuit Breaker and Fuse Information

Chassis Circuit Breaker

The circuit breaker is rated at 15A, and is located on the lower-left front of the chassis, on the power entry module. It also functions as an on / off switch to isolate the chassis.

CAUTION: If the circuit breaker trips due to current overload, it indicates an internal fault. Do not reset the circuit breaker yourself, contact Adept Customer Service at the numbers listed in Chapter 1.

Chassis Fuses

The two chassis fuses (F1 and F2) are located on the power control board. This is located behind the front air filter. Model 3303: Both chassis fuses are rated at 1A, size 3AG. Model 3306: Both chassis fuses are rated at 2A, size 20mm. Always replace blown fuses with fuses of the same type and rating. Fuse replacement must be done by a skilled or instructed person.

Fuse Replacement Procedure:

WARNING: Dangerous voltages are present inside the power chassis. Turn off the power to the power chassis and disconnect it from the AC power source before opening the front grill to inspect or replace the fuses. Failure to observe this warning could cause injury or damage to your equipment.

1. Make sure the Adept PA-4 power chassis and Adept MV controller are turned off and completely disconnected from the AC power source.
2. Open the front air-intake grill by loosening two screws and swinging the grill out.
3. Replace blown fuses with new ones of same type and rating.
4. Close the grill and secure the two screws.

Amplifier Module Fuses

In addition to the fuses in the power chassis, there are additional fuses located inside the power amplifier modules. The amplifier fuses are not user-replaceable. If you suspect that an amplifier fuse may have blown, contact Customer Service.

CAUTION: Failure of an amplifier fuse indicates an internal circuit fault which must be corrected before the fuse is replaced. Do not attempt to replace the fuse yourself, contact Adept Customer Service at the numbers listed in Chapter 1.

Joining an Adept PA-4 Power Chassis to an Adept MV Controller

The Adept PA-4 Power Chassis can be joined to the Adept MV-8 (or MV-19) controller using the brackets supplied in the accessories kit. They must be joined at the top and bottom, as described in the following sections.

Artisan Technology Group - Quality Instrumentation ... Guaranteed | (888) 88-SOURCE | www.artisantg.com

Joining at the Top

1. Place the two units next to each other. Turn off power to each unit and disconnect the power. Remove the top cover from both. See Figure 5-2.
2. Locate the C-shaped bracket in the accessory kit.
3. Slip the bracket under the lip of the top edge of the unit on the right-hand side and into the two slots in the edge of the chassis. Install two M4 x 8 flat head screws into the lip and down into the bracket.
4. Install the other two M4 x 8 flat head screws into the chassis on the left-hand side. Replace the cover on each unit.

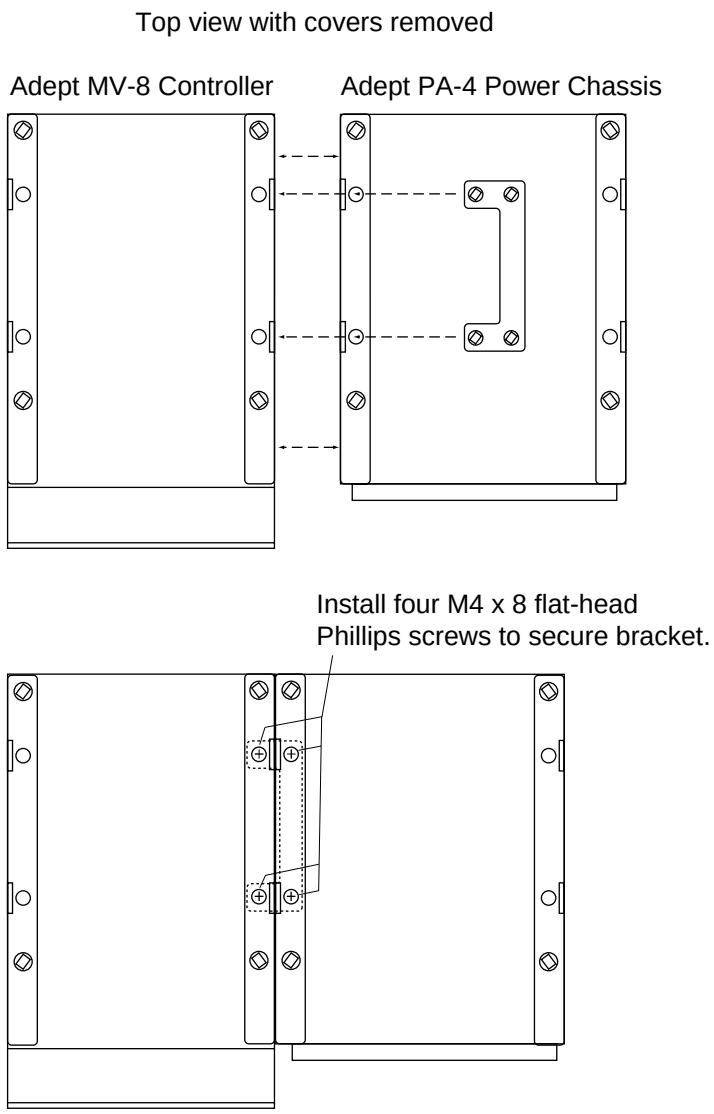

Figure 5-2. **Joining the Power Chassis and Controller at the Top**

Artisan Technology Group - Quality Instrumentation ... Guaranteed | (888) 88-SOURCE | www.artisantg.com

Joining at the Bottom

1. Turn the two units over so you have access to the bottom side.
2. Locate the two cutout brackets in the accessory kit.
3. Place the brackets over the feet of the units as shown in Figure 5-3.
4. Install the four M4 x 8 flat head screws in the holes indicated in Figure 5-3 to secure the brackets.

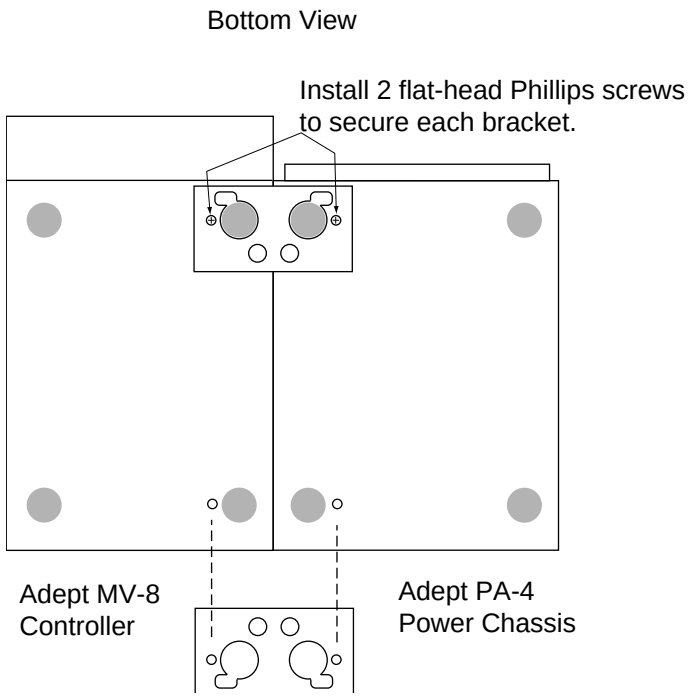

Figure 5-3. **Joining the Power Chassis and Controller at the Bottom**

Artisan Technology Group - Quality Instrumentation ... Guaranteed | (888) 88-SOURCE | www.artisantg.com

Installation in a Rack or Panel Mount

The power chassis (and controller if they are joined) can be mounted in a rack or panel by using the mounting brackets that are shipped in the accessory kit. The brackets can be attached at the rear of the power chassis for panel mounting or they can be attached to the front of the power chassis for rack mounting.

Space Around the Chassis

When the power chassis is installed, you must allow 50 mm (2 inches) at the front of the chassis and 25 mm (1 inch) at the top of the chassis for proper air cooling.

CAUTION: It is important to keep the air filter clean so the forced air cooling system can work efficiently. See Chapter 7 for details on cleaning the filter.

Panel Mounting

To panel mount the Adept PA-4 power chassis, install one bracket on each side near the back of the chassis. Use the screws and washers from the accessories kit. See Figure 5-4.

Rack Mounting

To rack mount the Adept PA-4 power chassis joined to an Adept MV-8 controller in a standard 19-inch equipment rack, you must use the mounting brackets, screws, and washers from the accessories kit. The brackets can be installed in two positions for rack mounting: flush and set-back. See Figure 5-4.

To rack mount the Adept PA-4 power chassis by itself in a standard 19-inch equipment rack, you must first install the mounting brackets, then build an extender panel and attach it to the bracket on one side of the chassis.

Artisan Technology Group - Quality Instrumentation ... Guaranteed | (888) 88-SOURCE | www.artisantg.com

To Install Mounting Brackets:

- Remove (and discard) 3 existing countersunk screws from side of chassis at locations shown in drawing.
- Place bracket in desired position and secure with indicated M4 pan-head screws and washers from accessories kit.
- Repeat process for other side of chassis. If the amp chassis is joined to an Adept MV controller, the position of the screws is different on the side of the controller. See the Adept MV Controller User's Guide for information.

Note: See Appendix A for dimensions of the chassis and mounting brackets.

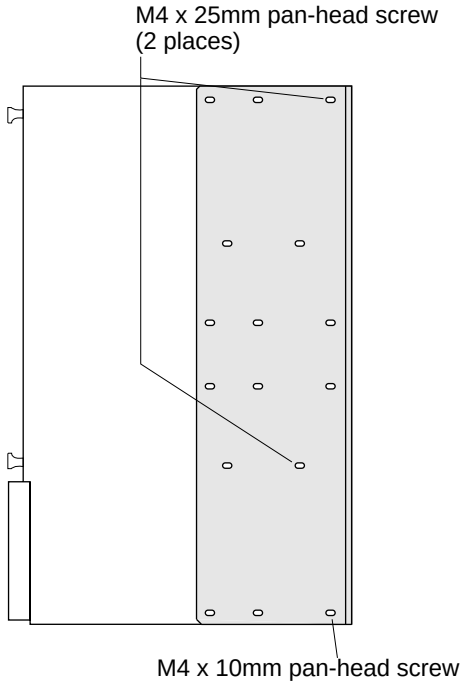

Panel Mount

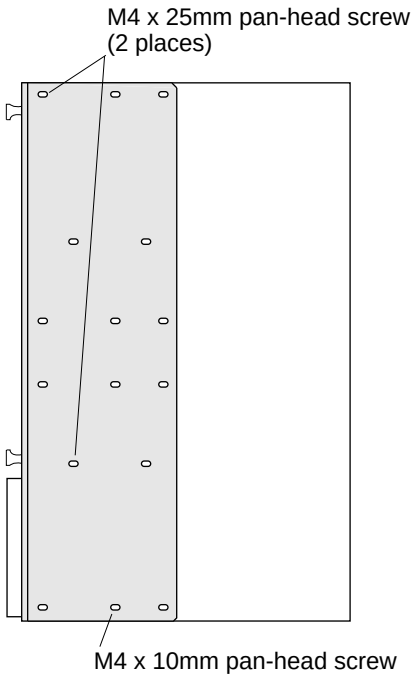

Rack Mount – Flush

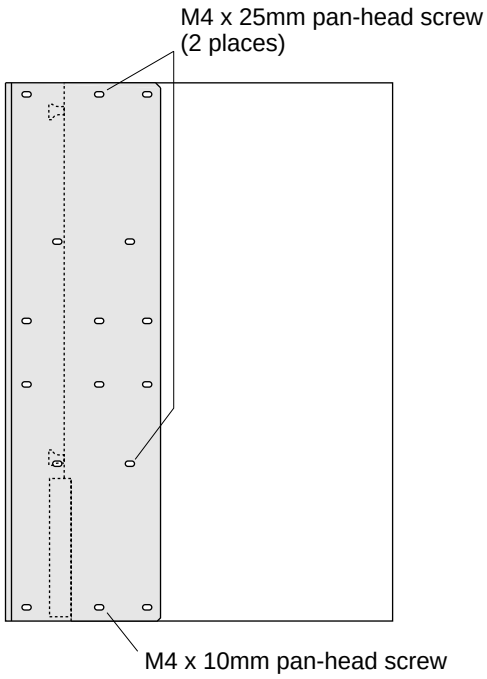

Rack Mount – Set-Back

Figure 5-4. **Installing Mounting Brackets**

Artisan Technology Group - Quality Instrumentation ... Guaranteed | (888) 88-SOURCE | www.artisantg.com

Removing and Installing Amplifier Modules

The Adept PA-4 power chassis is shipped from the factory with the amplifier modules installed in the chassis. Any unused slots are filled with blank covers. Normally you will not need to remove the amplifier modules. If you do need to remove and re-install a module for some reason, follow the instructions below. The four slots in the chassis are not interchangeable, some slots have special control signals. The amplifier modules are factory-installed in the correct slots. Contact Adept Customer Service if you need to relocate any modules.

WARNING: Do not attempt to install or remove any amplifier modules without first turning off the power to the power chassis and all related external power supplies. Failure to observe this warning could cause injury or damage to your equipment.

Removing Amplifier Modules

1. Turn off the power chassis and the Adept MV controller.
2. Note the location of any cables connected to the module, then disconnect them.
3. Loosen the captive screws at the top and bottom of the module.
4. Using both the top handle and bottom handle, pull the module straight out of the chassis. Remove the module from the chassis and store it in a safe place.

CAUTION: You must take precautions to prevent amplifier modules from being exposed to electro-static discharge (ESD) while you are handling or storing them. Adept recommends using an anti-static ground strap on your wrist when handling modules.

Installing Amplifier Modules

1. Turn off the power chassis and the Adept MV controller.
2. If the slot has a blank panel installed, loosen the captive screws at the top and bottom of the panel and remove it.
3. Verify that the intended slot for the module is ready to accept the module.
4. Align the module with the card guide slots at the top and bottom of the card cage. Slide the module in slowly. Apply straight-forward pressure to the top and bottom handles until it is firmly seated in the rear power connector, and the face of the module is flush with the other modules.

   It should not be necessary to use excess pressure or force to engage the connector. If the board does not properly connect with the rear power connector, remove the module and inspect the connector and guide slots for possible damage or obstructions.
5. Tighten the captive screws at the top and bottom of the module.

WARNING: There is an interlock circuit that prevents enabling power if the amp module screws are not tightened securely. This also applies to any blank panel cover(s). There are dangerous voltages present inside the power chassis, do not attempt to operate without blank panel cover(s) installed in any unused slots.

Artisan Technology Group - Quality Instrumentation ... Guaranteed | (888) 88-SOURCE | www.artisantg.com

5.3 Installing Cables: Robot/Controller/Power Chassis

System Cable Connections

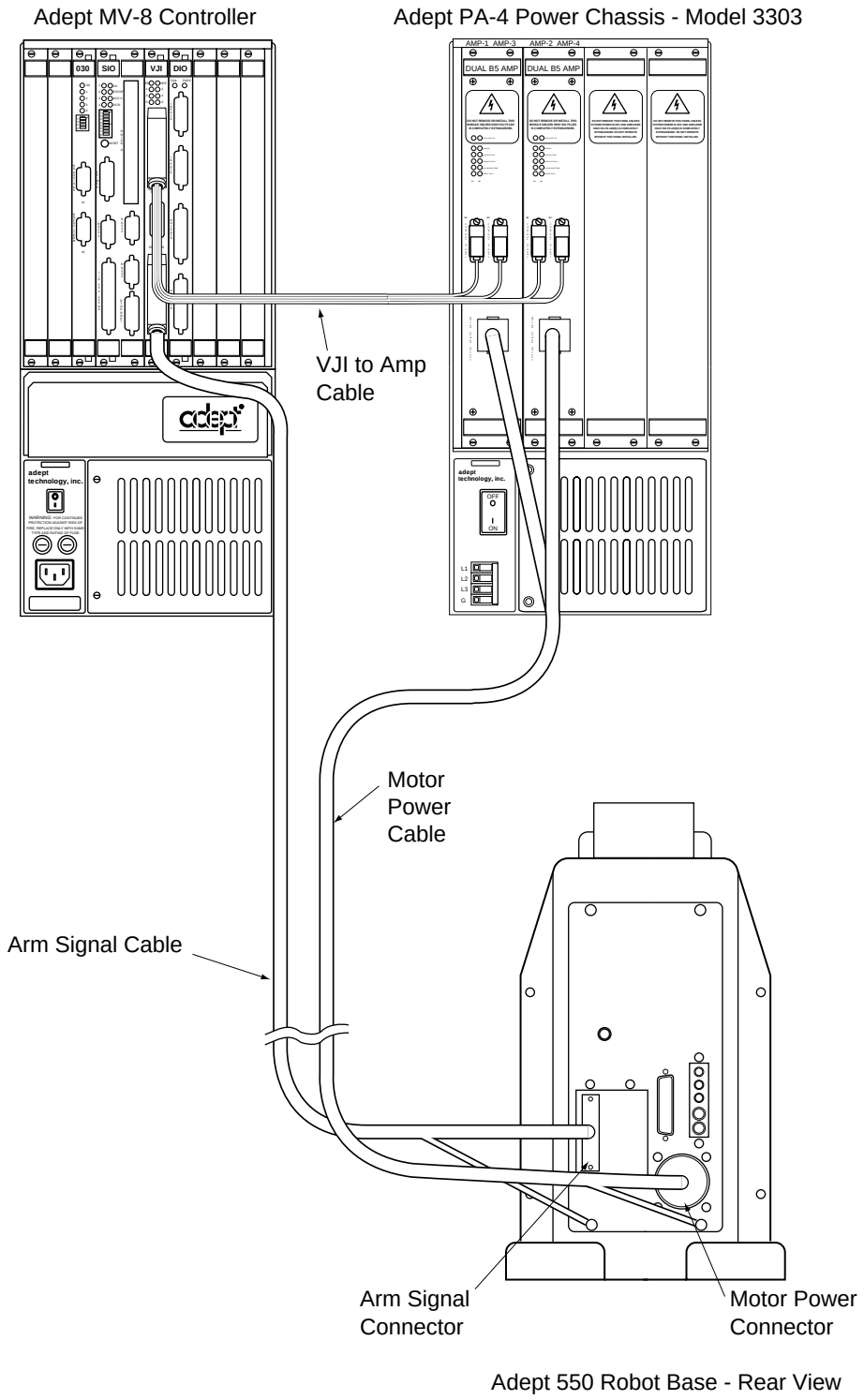

Figure 5-5. **Adept 550 System Cable Installation**

Artisan Technology Group - Quality Instrumentation ... Guaranteed | (888) 88-SOURCE | www.artisantg.com

Connecting Adept 550 Robot to Power Chassis

The cable between the robot and power chassis is called the “motor power” cable. It has a circular connector with a ground wire on the robot end and two square connectors on the power chassis end. This cable carries high-voltage DC power to the motors. This independent AC circuit can only be isolated using the circuit breaker on the front of the Adept PA-4 power chassis.

WARNING: Turn off the power to the power chassis before installing or removing any cables. Failure to observe this warning could cause injury or damage to your equipment.

Do not turn on the power chassis without installing the motor power cables. Dangerous AC and DC voltages may be present at the “Motor Power Output” connectors on the amplifier modules.

1. Connect the circular end of the motor power cable to the matching connector on the back plate of the robot. Tighten firmly by hand only. See Figure 5-5 and Figure 5-6.
2. Install the motor power cable ground wire (comes out from the end of the cable next to the circular connector) to the ground wire installation point at the bottom of the back plate of the robot.
   a. Remove the screw and the external-tooth lock washer from the ground wire installation point.
   b. Place the external-tooth lock washer against the back plate over the empty hole, then place the ground wire lug over the washer. See Figure 5-6.
   c. Install the screw and secure tightly.

CAUTION: Make sure that the ground wire lugs from the motor power and signal cables are securely fastened to the robot back plate, with the external-tooth lock washer located next to the back plate. Failure to secure the ground wire lug will cause damage to the robot.

(procedure continued on page 43)

Artisan Technology Group - Quality Instrumentation ... Guaranteed | (888) 88-SOURCE | www.artisantg.com

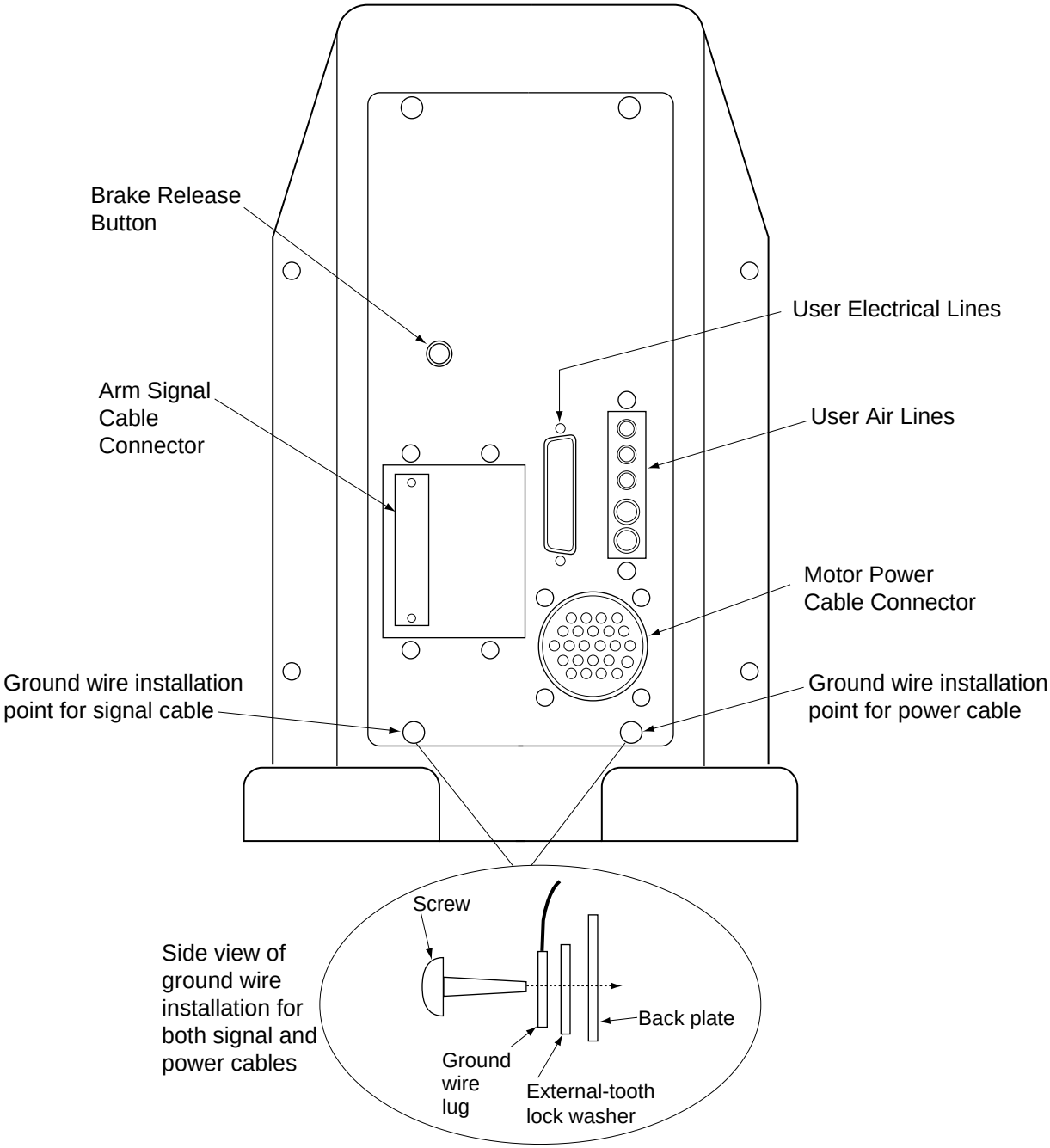

Figure 5-6. **Adept 550 Robot Back Plate and Ground Connections**

Artisan Technology Group - Quality Instrumentation ... Guaranteed | (888) 88-SOURCE | www.artisantg.com

3. Connect the other end of the motor power cable to the two matching connectors on the amplifier modules in the following order. (Figure 5-7).

   a. Install the plug labeled **Dual B Amp #1** in the connector marked “Motor Power Output” on **Module 1**.

   b. Install the plug labeled **Dual B Amp #2** in the connector marked “Motor Power Output” on **Module 2**.

   Pull gently on the connector bodies to ensure they are securely latched.

   NOTE: If you need to remove these connectors later, turn off power to the chassis, then squeeze together the latch handles at the top and bottom of the connector and pull out.

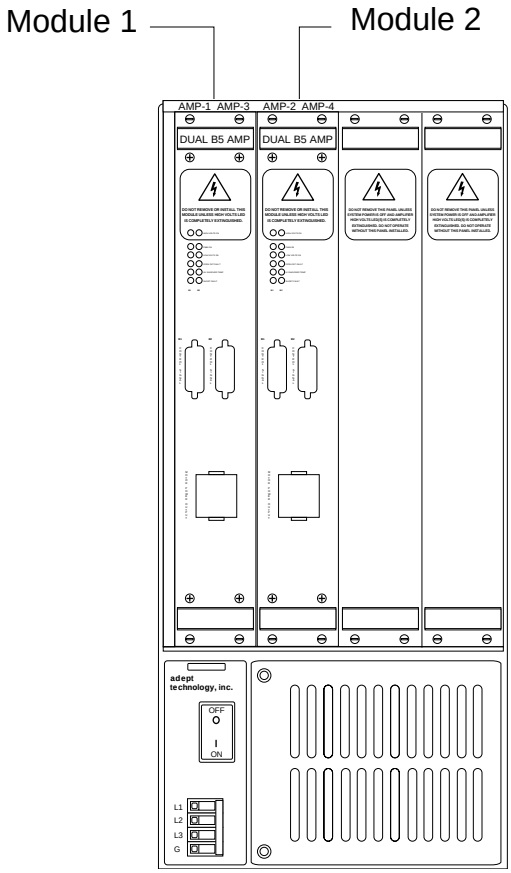

Figure 5-7. **Amplifier Modules 1 and 2 in Power Chassis, Model 3303**

Artisan Technology Group - Quality Instrumentation ... Guaranteed | (888) 88-SOURCE | www.artisantg.com

Connecting Robot to Adept MV Controller

The cable between the robot and the VJI module in the Adept MV controller is called the arm signal cable. It has rectangular connectors on each end; one end has a separate ground wire.

1. Connect the cable end with the ground wire to the matching Signal connector on the back plate of the robot. Pull gently on the connector body to ensure it is securely latched. See Figure 5-6. (If you need to remove this connector later, there is a release button on the underside of the cable connector.)
2. Install the signal cable ground wire (comes out from the end of the cable next to the rectangular connector) to the ground wire installation point at the bottom of the back plate.
   a. Remove the screw and the external-tooth lock washer from the ground wire installation point.
   b. Place the external-tooth lock washer against the back plate over the empty hole, then place the ground wire lug over the washer. See Figure 5-6.
   c. Install the screw and secure tightly.
3. Connect the other end of the cable to the Arm Signal connector (lower) on the VJI module. Tighten the screws. See Figure 5-8.

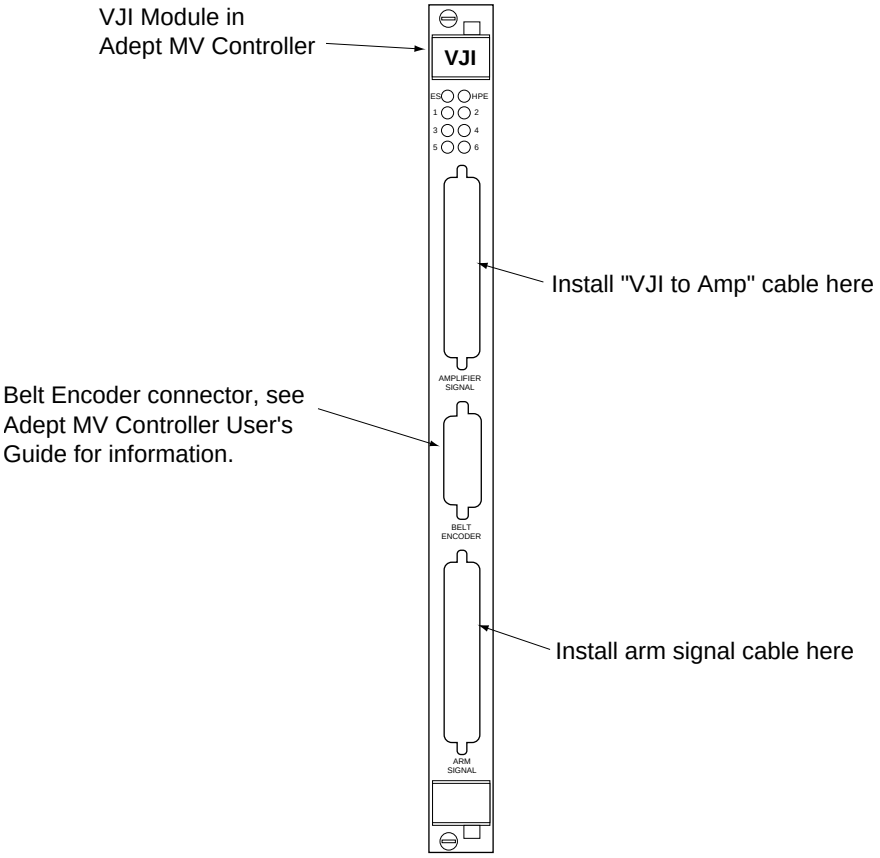

Figure 5-8. **Robot to VJI Cable Installation**

Artisan Technology Group - Quality Instrumentation ... Guaranteed | (888) 88-SOURCE | www.artisantg.com

Connecting Adept MV Controller to Power Chassis

The "VJI to Amp" (amplifier signal) cable must be installed between the controller and the power chassis. This cable assembly has a single plug on one end (for the VJI) and four plugs on the other end (for the amp).

1. Connect the cable end with the single connector to the connector marked "Amplifier Signal" (upper) on the VJI module. Tighten the screws. See Figure 5-8.
2. The other end of the cable with four plugs must be connected in the following *special* pattern. See Figure 5-9.
   a. Connect the plug labeled Amplifier Crtl 1 to the B1 connector on Module 1.
   b. Connect the plug labeled Amplifier Crtl 3 to the B2 connector on Module 1.
   c. Connect the plug labeled Amplifier Crtl 2 to the B1 connector on Module 2.
   d. Connect the plug labeled Amplifier Crtl 4 to the B2 connector on Module 2.

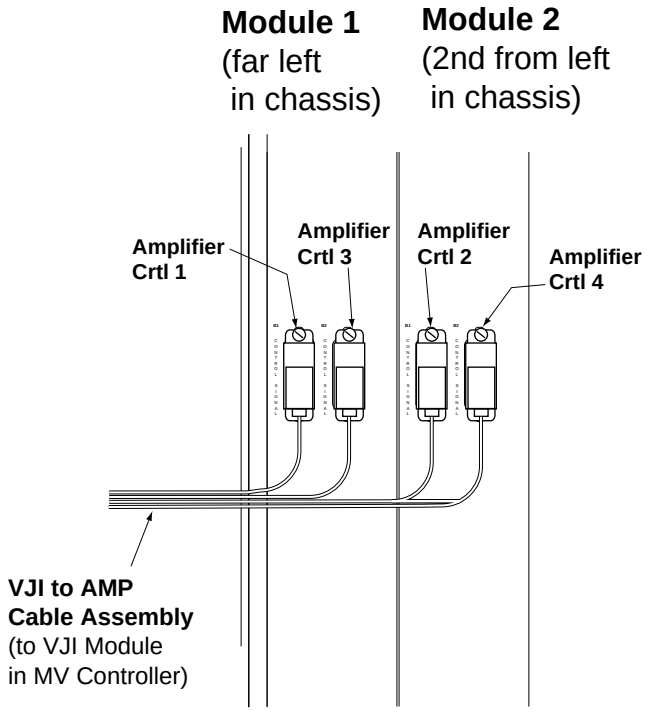

Figure 5-9. **Power Chassis to VJI Cable Installation, Model 3303**

Artisan Technology Group - Quality Instrumentation ... Guaranteed | (888) 88-SOURCE | www.artisantg.com

Artisan Technology Group - Quality Instrumentation ... Guaranteed | (888) 88-SOURCE | www.artisantg.com

Operation 6

6.1 Verify Installation 48

Physical Connections 48

6.2 Turn On Controller and Power Chassis 48

6.3 Calibrate Robot 48

About Calibration 49

6.4 Learning to Operate and Program the Adept 550 Robot 49

6.5 Limiting Joint Travel 50

Softstops 50

Hardstops 50

6.6 Brakes 51

Brake Release Button 51

Artisan Technology Group - Quality Instrumentation ... Guaranteed | (888) 88-SOURCE | www.artisantg.com

6.1 Verify Installation

Physical Connections

Before turning on the controller and power chassis, make sure all cables from the robot to the power chassis, the robot to the controller, and the controller to power chassis are installed correctly. See Chapter 5 for installation instructions.

CAUTION: Ensure that all screws holding the amp modules and blank panels in the power chassis are securely fastened. If they are loose, power to the robot cannot be enabled.

If you have the Manual Control Pendant (MCP), check to see that it is plugged in on the controller's external front panel.

Finally, make sure both the controller and power chassis are connected to the correct AC power source. See the *Adept MV Controller User's Guide* for details about the controller's power requirements.

6.2 Turn On Controller and Power Chassis

After checking all physical connections, boot up the controller by turning the ON / OFF switch to ON. The controller loads the V^+ operating system from code stored on the C: drive. See the *V^+ Operating System User's Guide* for more details on this process.

Next, turn the power chassis ON / OFF switch to ON. The power chassis will not power up if the controller has not been turned on. The LOW VOLTS lights on the amp should be green.

The lower three pairs of red LEDs on the front panel of the amp modules may come on in a random pattern after the power switch is turned on. This does not indicate any problem. Once you have enabled power, (see below) the red LEDs will all turn off.

6.3 Calibrate Robot

1. Before calibrating, make sure the robot is in a safe position within its envelope as it may move suddenly when you calibrate. Make sure that the E-STOP (emergency stop) light is off on the SIO module.
2. Type **enable power** at the dot prompt in the system's V^+ monitor. After a delay of 10–20 seconds the cursor appears next to the dot prompt in the V^+ monitor. The HIGH VOLTS lights on the amp should be yellow. If any system faults occur, they will be displayed on the monitor.

Artisan Technology Group - Quality Instrumentation ... Guaranteed | (888) 88-SOURCE | www.artisantg.com

3. Type **calibrate** at the dot prompt in the V^+ monitor.

WARNING: The robot will move when you type **calibrate**. During calibration the robot moves to the softstop limits in all joints. Observe all safety precautions.

When calibration is complete, the monitor displays the dot prompt. This means the system is ready for operation. The pair of green LEDs labeled PWM on the front of the amp panel will also turn on.

About Calibration

Each robot has specific parameters that locate the zero degree position for each joint. The zero degree position is based on the first order index from the home sensor. This information is read from the robot's Robot Signature Card (RSC).

The first step in calibration is to "twang" the motor of each joint. Twanging energizes one of the phases of the motor to find the commutation point of each motor. The motor moves the joint along a pre-defined direction toward its home sensor, then back to its 0 degree position. The robot jerks slightly during twanging.

6.4 Learning to Operate and Program the Adept 550 Robot

When the robot has been calibrated, you should go to the *V^+ Operating System User's Guide* to find information on basic operation of the V^+ Operating System. Also refer to the *Instructions for Adept Utility Programs* for information on using the Adept utility programs.

For programming information you need to refer to the following list of optional manuals:

- *V^+ Language User's Guide*
- *V^+ Language Reference Guide*
- *V^+ Operating System Reference Guide*

Artisan Technology Group - Quality Instrumentation ... Guaranteed | (888) 88-SOURCE | www.artisantg.com

6.5 Limiting Joint Travel

The joint motion range, or travel, is limited by both software and hardware. The programmable software limits are known as *softstops*. The fixed mechanical stops are called *hardstops*.

Softstops

Softstops are used when the normal motion range of the robot must be limited (if other equipment is installed inside the envelope, for example). The softstops for each joint are set to their maximum value at the factory. To limit any joint's motion range, change the joint's softstop value using the SPEC utility program (formerly CONFIG_R) on the Adept Utility Disk supplied with the system. Refer to the *Instructions for Adept Utility Programs* or the V^+ *Release Notes* for information regarding this utility program.

If a robot joint travels beyond a softstop, the controller will shut off High Power and activate the robot brakes. Furthermore, the control software will not allow the robot power to be turned on while any joint is beyond its softstop. If this situation occurs, manually move the arm back within the softstop limits.

When you are using the manual control pendant to move the robot, the robot will stop abruptly when it encounters a softstop. This abruptness does not mean a hardstop has been contacted.

Hardstops

Joints 1, 2, and 3 have hardstops at each end of the joint's travel.

Joint 4 does not have hardstops. However, its motion is limited by software, and its softstops can be set to further limit Joint 4 motion (see above).

> **NOTE:** Joint 4 can be rotated an infinite number of turns. To avoid wind-up of harnesses going to end-of-arm tooling, Joint 4 should always be left at +/– 90 degrees (in joint coordinates) when powering down the controller. This ensures that when the system is next powered on and the robot is recalibrated, it calibrates in the same Joint 4 orientation, without winding up user harnesses.

Table 6-1. **Softstop and Hardstop Specifications**

	Softstop	Hardstop – Approximate
Joint 1	±100°	±108°
Joint 2	±140°	±149°
Joint 3	0 to 200 mm	–12 to 212 mm
Joint 4	±360° max (set to ±180° at the factory)	None

Artisan Technology Group - Quality Instrumentation ... Guaranteed | (888) 88-SOURCE | www.artisantg.com

6.6 Brakes

Joints 1, 2, and 4 have dynamic brakes that are used only to stop the robot in an emergency condition, such as when the emergency stop circuit is broken or a robot joint passes its softstop. These brakes will not prevent you from moving the robot manually once the robot has stopped (and High Power has been removed).

Joint 3 has an electric brake. The brake is off when high power is enabled. When High Power is turned off, the brake actuates and holds the position of Joint 3.

Brake Release Button

Under some circumstances you may want to manually position Joint 3 without turning on High Power. For such instances, a brake-release button is located on the robot backplate (see Figure 5-6). When system power is on, pressing the button releases the brake, which allows movement of Joint 3.

CAUTION: When the brake release button is pressed, Joint 3 may drop to the bottom of its travel. To prevent possible damage to the equipment, make sure that the Joint 3 is supported while releasing the brake and verify that the end effector or other installed tooling is clear of all obstructions.

Artisan Technology Group - Quality Instrumentation ... Guaranteed | (888) 88-SOURCE | www.artisantg.com

Artisan Technology Group - Quality Instrumentation ... Guaranteed | (888) 88-SOURCE | www.artisantg.com

Maintenance 7

7.1 Maintenance Schedule 54
7.2 Checking Mounting Bolts and Leveling 54
7.3 Lubricate Joint 3 Ball Screw 54
7.4 Check Tension and Wear On J3 and J4 Drive Belts 55
7.5 Adept PA-4 Power Chassis 59
Fan Filter Inspection and Cleaning 59

Artisan Technology Group - Quality Instrumentation ... Guaranteed | (888) 88-SOURCE | www.artisantg.com

7.1 Maintenance Schedule

Table 7-1. **Inspection and Maintenance**

Item	Period	Reference
Check mounting bolts	6 months	See Section 7.2.
Check leveling of base	6 months	See Section 7.2.
Lubricate Joint 3 (Z-axis) ball screw	3 months	See Section 7.3.
Check tension of Joint 3 (Z-axis) drive belt	3 months	See Section 7.4.
Check tension of Joint 4 (W-axis) drive belt	3 months	See Section 7.4.
Check air filter in PA-4 power chassis	1 month	See Section 7.5.

7.2 Checking Mounting Bolts and Leveling

Check the tightness of the base mounting bolts every 6 months. Tighten to 700 Kgfcm (50 ft-lb).

Check the leveling of the base every 6 months.

7.3 Lubricate Joint 3 Ball Screw

Use Marutemp SRL grease (60554-00070) to lubricate the Joint 3 ball screw.

Procedure

1. Turn off main power to the controller.
2. Remove the Joint 3 cover by removing two nuts (using an 8 mm socket) on the top of the cover and lifting the cover up and off. See Figure 7-1.
3. Move Joint 3 to the top of its travel. Remove any existing grease with a soft cloth.
4. Apply a thin film of grease to the surface of the length of the ball screw.
5. Move Joint 3 to the bottom of its travel. Remove any existing grease with a soft cloth.
6. Apply a thin film of grease to any surface of the ball screw that you did not reach in the previous step.
7. Move Joint 3 up and down several times to spread the grease evenly.

Artisan Technology Group - Quality Instrumentation ... Guaranteed | (888) 88-SOURCE | www.artisantg.com

8. Replace the Joint 3 cover.

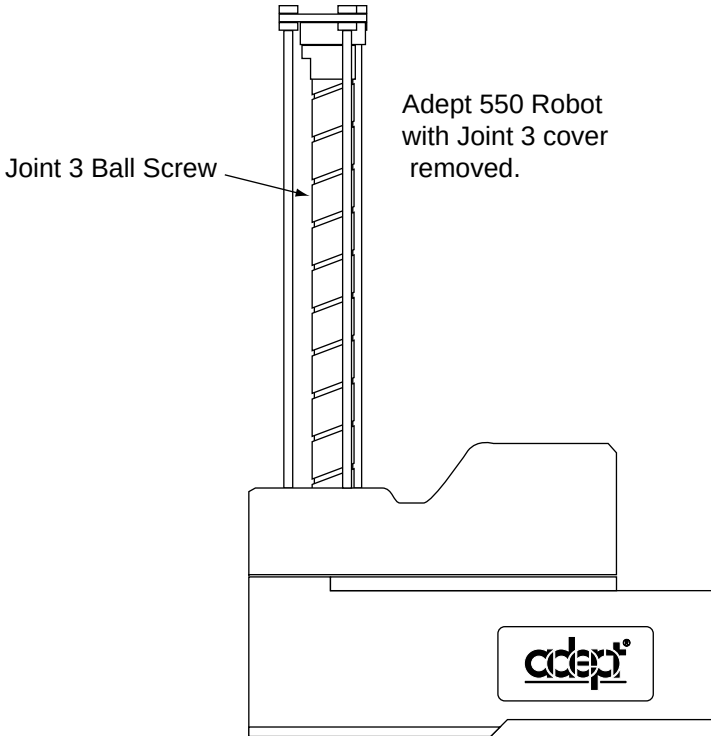

Figure 7-1. **Lubrication of Joint 3 Ball Screw**

7.4 Check Tension and Wear On J3 and J4 Drive Belts

Check the tension and wear on the Joint 3 and Joint 4 drive belts every 3 months.

1. Turn off main power to the controller.
2. Remove the access cover by loosening four screws (using 2.5 mm hex wrench) on the under side of the outer link. See Figure 7-2. Note the path of the cable that runs along the side of the opening so that you can route it the same way at the end of this procedure.
3. Drop the Joint 3 brake assembly out of the way by removing 4 M3 x 8 screws (using 2.5 mm hex wrench) and lowering the assembly. This makes it much easier to access the drive belts.

   NOTE: Be careful not to lose the four spacers that are between the brake assembly and the outer link assembly. See Figure 7-4. These spacers are necessary to ensure that the brake is aligned properly with the Joint 3 drive pulley.

4. Check the tension of the Joint 3 and Joint 4 drive belts with your fingers. See Figure 7-3. The belts should feel tight to the touch. If there is any noticeable looseness, call Adept Customer Service.

Artisan Technology Group - Quality Instrumentation ... Guaranteed | (888) 88-SOURCE | www.artisantg.com

5. Inspect up in the drive belt area with a flashlight to look for signs of excess wear from the drive belts. A small amount of residue or dust from the belts is normal. Any larger particles that may indicate worn or broken teeth on the drive belts could be a problem. Call Adept Customer Service if you discover anything that looks unusual.

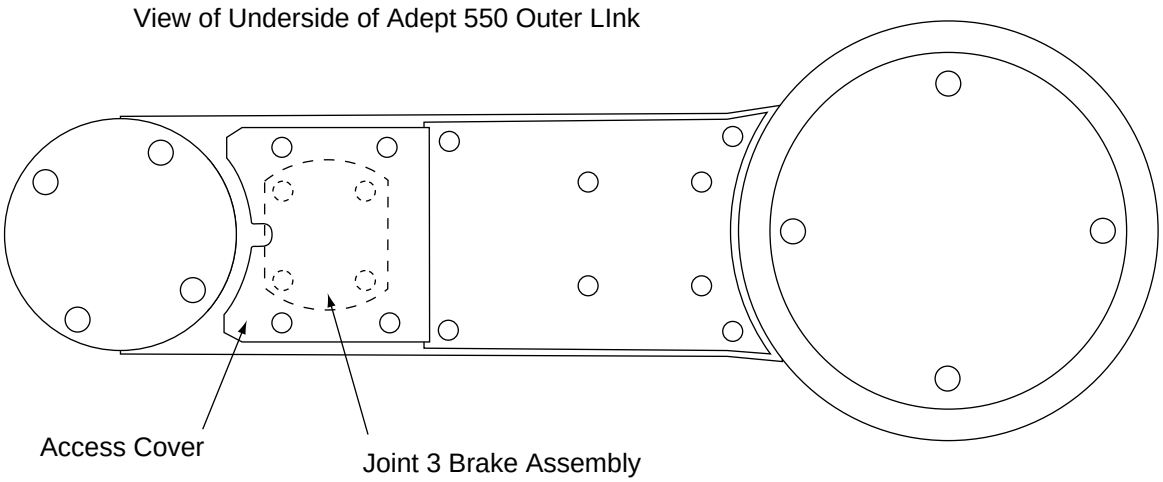

Figure 7-2. **Location of Access Cover on Underside of Outer Link**

Artisan Technology Group - Quality Instrumentation ... Guaranteed | (888) 88-SOURCE | www.artisantg.com

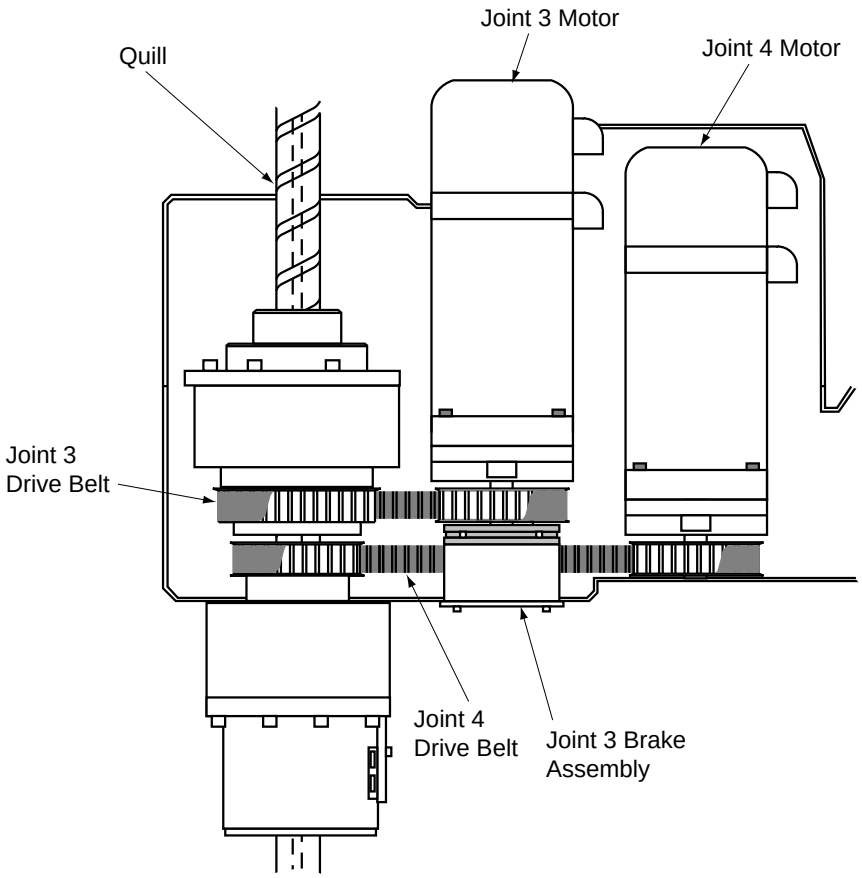

Figure 7-3. **Location of Joint 3 and Joint 4 Drive Belts**

6. Re-install the Joint 3 brake assembly, making sure the spacers are in place (see Figure 7-4) and that the brake assembly fits correctly. You may have to move Joint 3 up or down slightly to ensure the brake assembly meshes correctly with the mechanism on Joint 3. Secure the brake assembly with the 4 screws.

7. Install the access cover using the 4 screws you removed earlier. Make sure the cable running along the inside of the opening is not pinched when you install the access cover.

Artisan Technology Group - Quality Instrumentation ... Guaranteed | (888) 88-SOURCE | www.artisantg.com

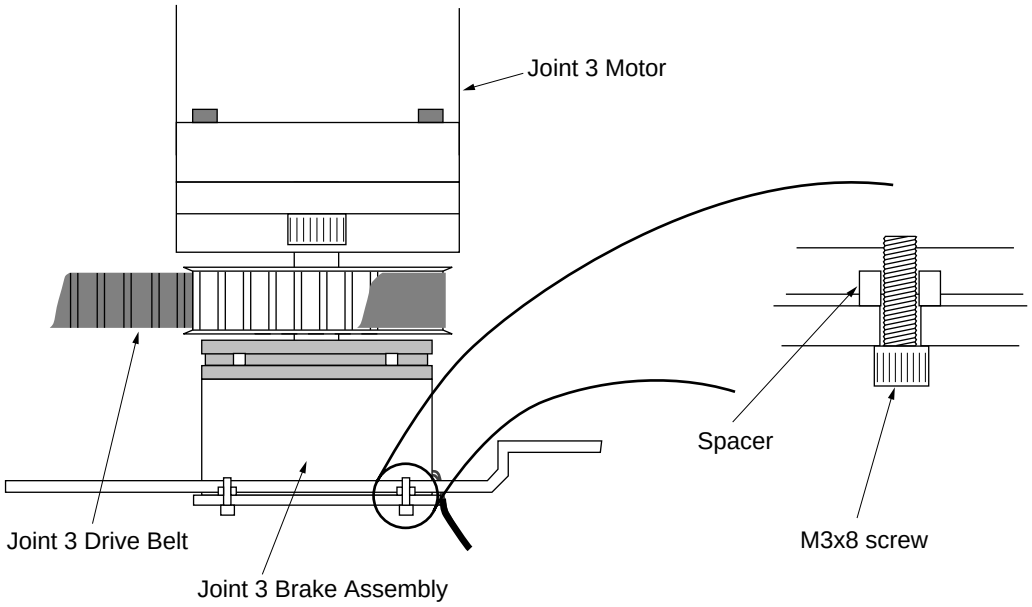

Figure 7-4. **Close-up View of Joint 3 Brake Assembly**

Artisan Technology Group - Quality Instrumentation ... Guaranteed | (888) 88-SOURCE | www.artisantg.com

7.5 Adept PA-4 Power Chassis

Fan Filter Inspection and Cleaning

The air filter located on the front of the chassis should be *inspected regularly and cleaned* at the first sign of dust or dirt buildup. The filter must be inspected and cleaned at least once per month. Regular cleaning will prolong the life of the filter. If the filter becomes clogged or unusable for any reason, you will need to order a new air filter. The part number for the filter is: 40330-11190 for chassis Model 3303, 40330-112000 for chassis Model 3306.

WARNING: Dangerous voltages are present inside the power chassis. Turn off the power to the power chassis and disconnect it from the AC power source before opening the front grill to inspect the air filter. Failure to observe this warning could cause injury or damage to your equipment.

1. Turn off the power to the power chassis and disconnect it from the AC power source.
2. Open the front grill by loosening two screws and swinging the grill out.
3. Pull the air filter out and inspect for dust or dirt particles. If cleaning is required, use compressed air to clean the filter.
4. Replace the cleaned air filter and secure the grill.

See the *Adept MV Controller User's Guide* for information on checking the air filter in the Adept MV controller.

Artisan Technology Group - Quality Instrumentation ... Guaranteed | (888) 88-SOURCE | www.artisantg.com

Artisan Technology Group - Quality Instrumentation ... Guaranteed | (888) 88-SOURCE | www.artisantg.com

Dimension Drawings A

A.1 Dimensions for Adept 550 Robot. 62
A.2 Dimensions for Adept PA-4 Power Chassis 63
A.3 Dimensions for Power Chassis and Controller 64
A.4 Mounting Bracket Dimensions. 65

Artisan Technology Group - Quality Instrumentation ... Guaranteed | (888) 88-SOURCE | www.artisantg.com

A.1 Dimensions for Adept 550 Robot

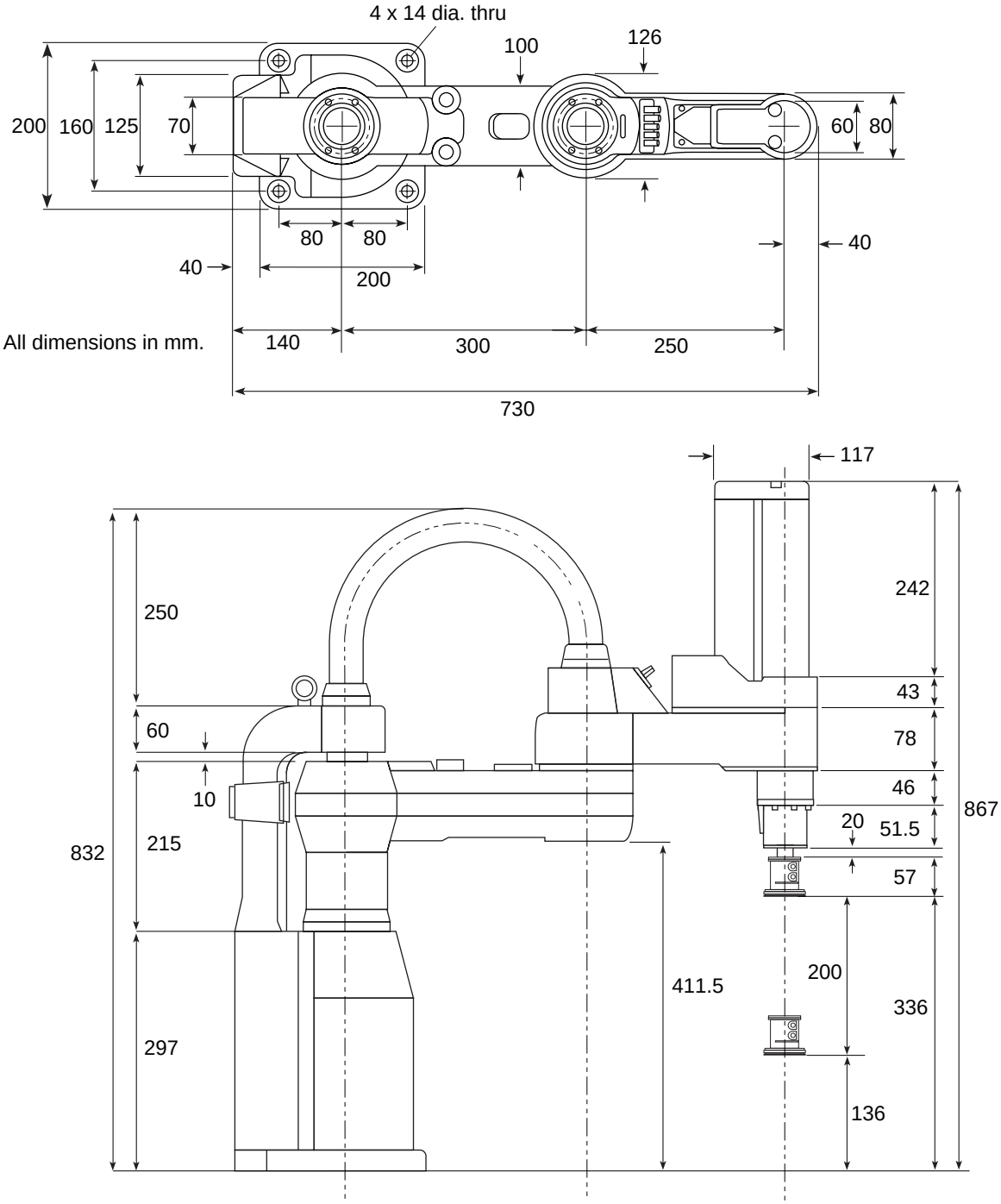

Figure A-1. **Adept 550 Robot Top and Side Dimensions**

Artisan Technology Group - Quality Instrumentation ... Guaranteed | (888) 88-SOURCE | www.artisantg.com

A.2 Dimensions for Adept PA-4 Power Chassis

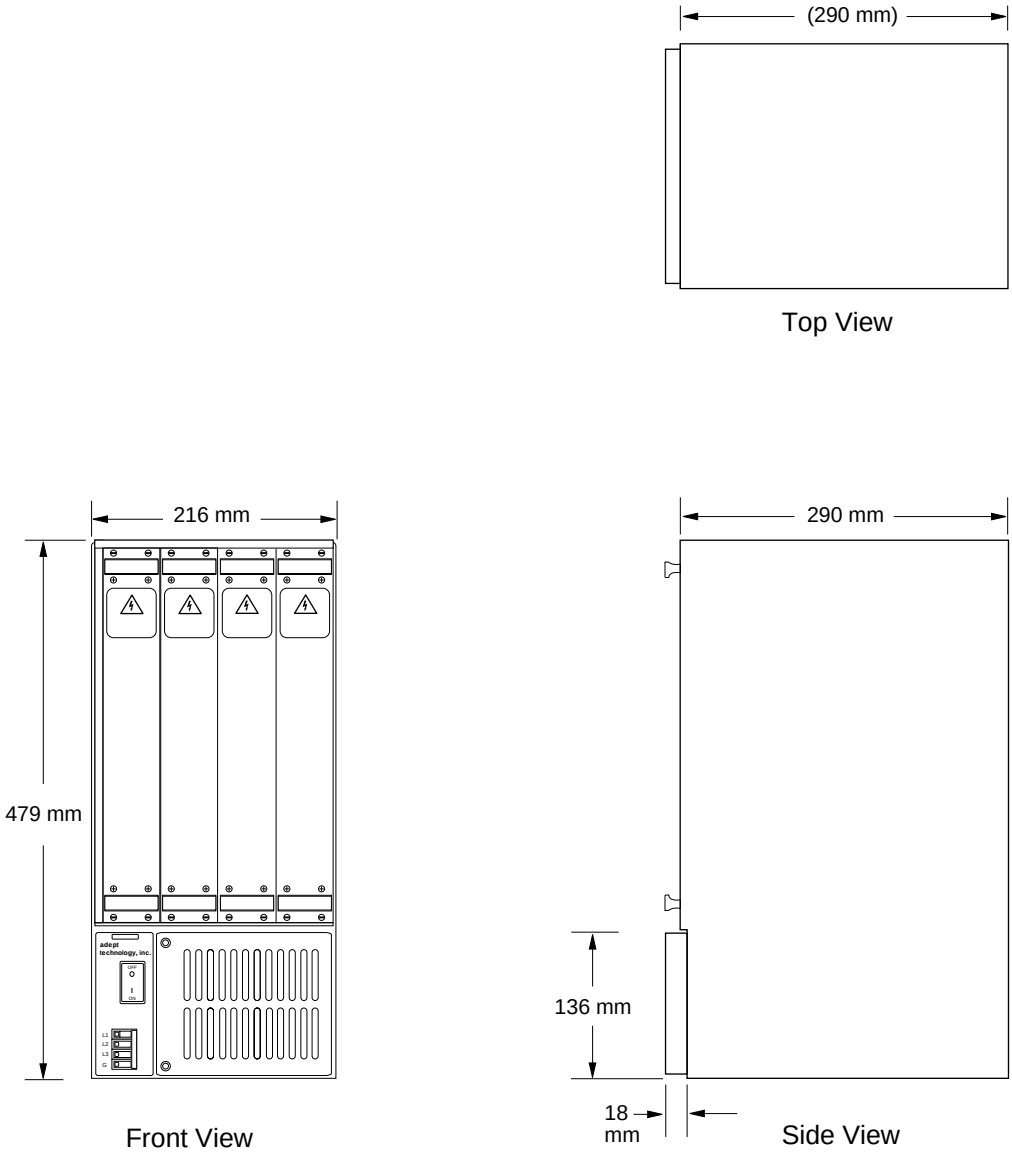

Figure A-2. **Adept PA-4 Power Chassis Dimensions**

Artisan Technology Group - Quality Instrumentation ... Guaranteed | (888) 88-SOURCE | www.artisantg.com

A.3 Dimensions for Power Chassis and Controller

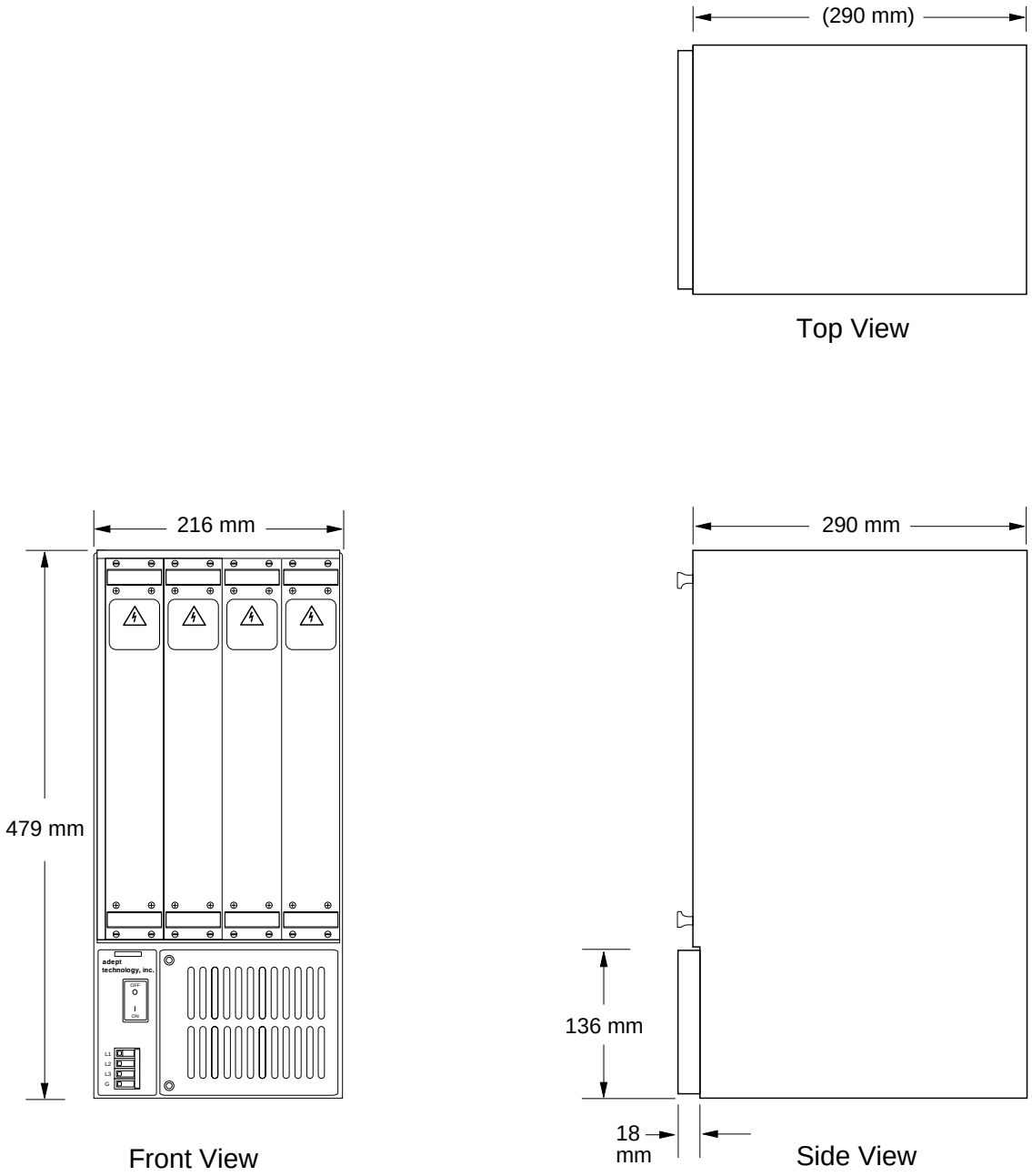

Figure A-3. **Power Chassis and Controller Dimensions**

Artisan Technology Group - Quality Instrumentation ... Guaranteed | (888) 88-SOURCE | www.artisantg.com

A.4 Mounting Bracket Dimensions

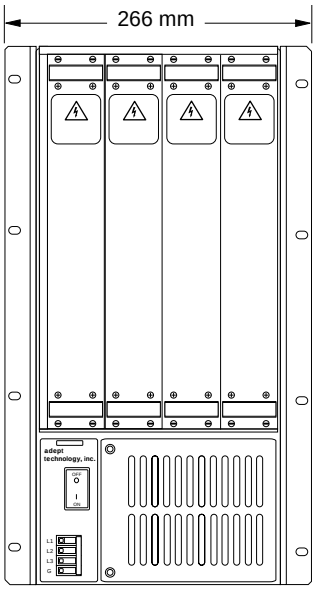

Power Chassis with mounting brackets installed

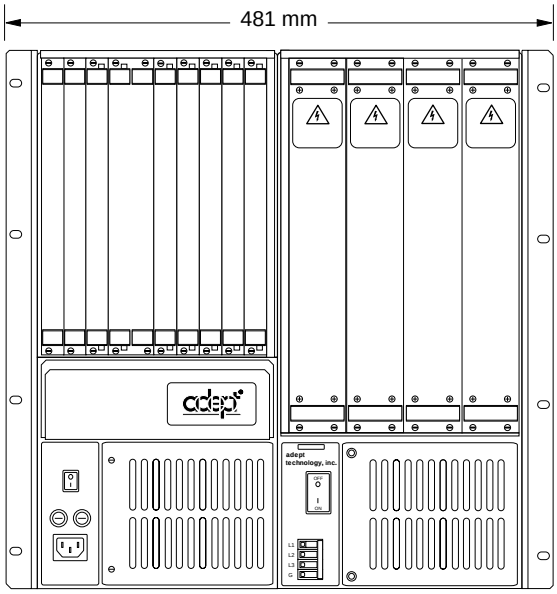

Controller and Power Chassis with mounting brackets installed

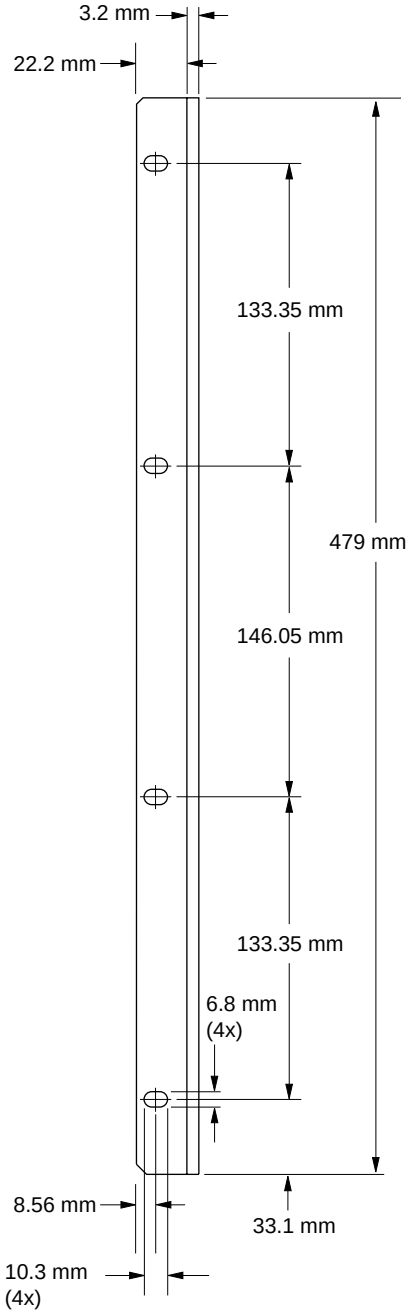

Figure A-4. **Power Chassis and Controller with Mounting Brackets Installed**

Artisan Technology Group - Quality Instrumentation ... Guaranteed | (888) 88-SOURCE | www.artisantg.com

Artisan Technology Group - Quality Instrumentation ... Guaranteed | (888) 88-SOURCE | www.artisantg.com

Adept 550 CleanRoom Robot B

B.1 Introduction 68
Vacuum Specifications 68
B.2 Installation 68
B.3 Adept 550 CleanRoom Robot Dimensions 69

Artisan Technology Group - Quality Instrumentation ... Guaranteed | (888) 88-SOURCE | www.artisantg.com

B.1 Introduction

The Adept 550 Class 10 CleanRoom robot meets or exceeds specifications for Class 10 cleanroom products.

The Adept 550 CleanRoom robot product specifications are the same as the standard Adept 550 robot (listed in Table 2-1), except the Vertical Stroke (Joint 3 - Z direction) is 180 mm (7.1"). The working envelope dimensions for the Adept 550 CleanRoom robot are the same as those shown in Figure 2-5.

Vacuum Specifications

Table B-1. **Adept 550 CleanRoom Robot Vacuum Specifications**

Vacuum Fitting on 550	50.5 mm external diameter 45 mm internal diameter
Air pressure, minimum	800 mm of water column
Air flow rate, minimum	1.2 cubic meter / minute
Vacuum source	Spiral Blowers Model SL5A60F* (or equivalent) *Contact Japanese Products Corp. at 203-840-1601 for information.

B.2 Installation

The robot installation procedures are the same as those listed in Chapter 4, with the additional step of connecting a user-supplied vacuum source as described above.

Artisan Technology Group - Quality Instrumentation ... Guaranteed | (888) 88-SOURCE | www.artisantg.com

B.3 Adept 550 CleanRoom Robot Dimensions

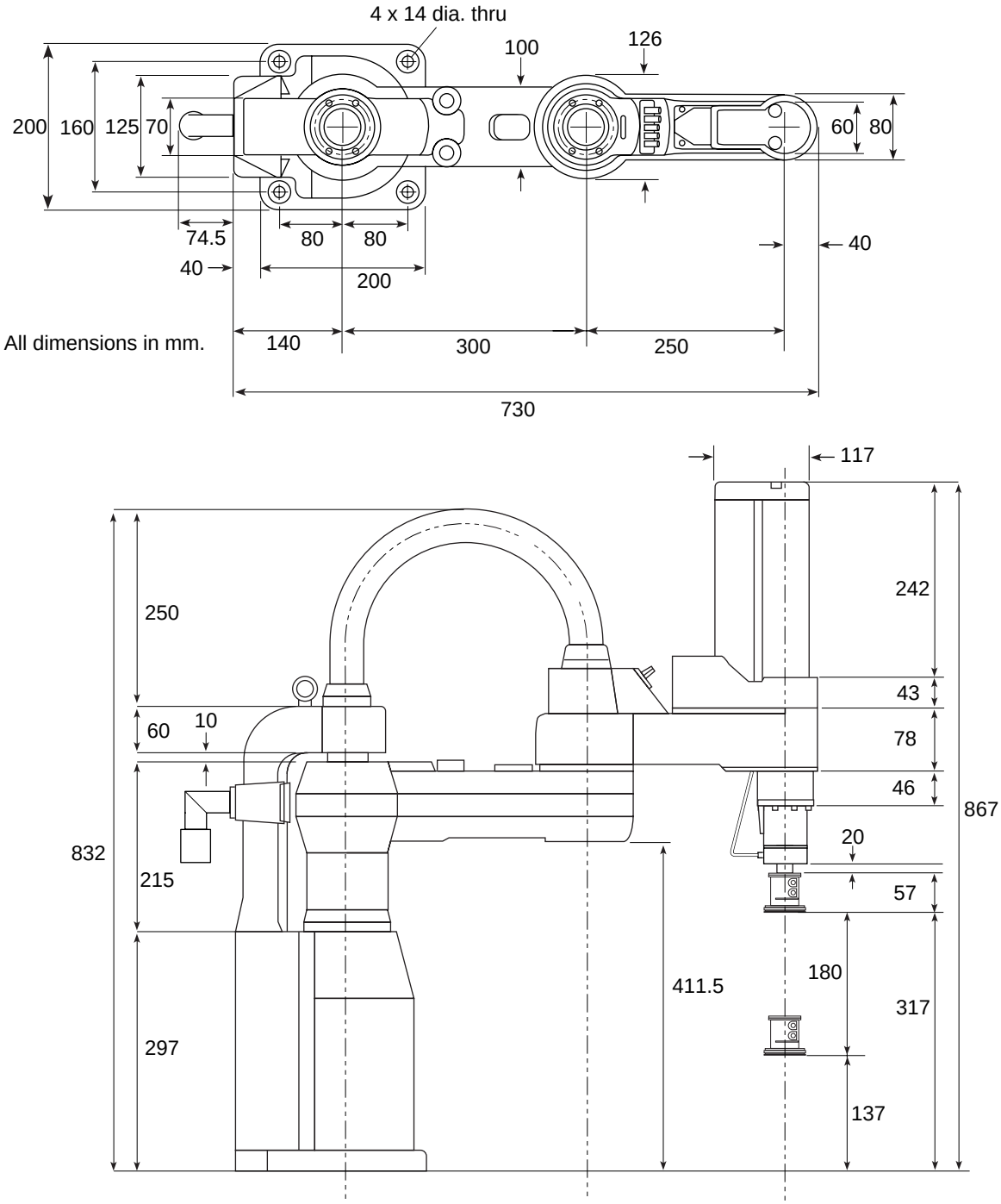

Figure B-1. **Adept 550 CleanRoom Robot Top and Side Dimensions**

Artisan Technology Group - Quality Instrumentation ... Guaranteed | (888) 88-SOURCE | www.artisantg.com

Artisan Technology Group - Quality Instrumentation ... Guaranteed | (888) 88-SOURCE | www.artisantg.com

Dual Adept 550 Robots C

C.1 Introduction 72
Dual Adept 550 Robot System Description 72
C.2 Installation 72
VMEbus Address for VJI Module 72
Adept PA-4 Power Chassis 72
Cable Installation (Model 3303, with two power chassis) 73
C.3 Operation with the Manual Control Pendant (MCP) 73
C.4 Programming Information 73
V+ Language Programming 73
V+ Monitor Commands 73
C.5 Emergency Stop Circuit Shuts Off Both Robots 74

Artisan Technology Group - Quality Instrumentation ... Guaranteed | (888) 88-SOURCE | www.artisantg.com

C.1 Introduction

All of the information in this user's guide is applicable to the Dual Adept 550 robot configuration. This appendix describes some additional considerations when working with this product.

Dual Adept 550 Robot System Description

A Dual Adept 550 robot system consists of the following components:

- two standard Adept 550 robots, no modifications required
- an Adept MV-8 or -19 controller with two VJI modules installed
- an Adept PA-4 power chassis with four Dual B amplifier modules installed, or two PA-4 power chassis with two amplifier modules in each chassis.
- a Dual Adept SCARA Kinematics License and a V^+ Extensions License

C.2 Installation

The installation process for the system is the same as described in Chapter 4 and Chapter 5, except that there are two VJI modules in the Adept MV controller, and four amplifier modules in either one or two power chassis.

VMEbus Address for VJI Module

If you purchased both Adept 550 robots at the same time as part of a Dual Adept 550 robot system, then the two VJI modules will be configured at the factory for the correct VMEbus address.

If you are upgrading or installing a 2nd VJI as a replacement part, then you should check the VJI address setting to make sure it is configured correctly; it should be set as Servo Board 3. See the VJI chapter in the *Adept MV Controller User's Guide* for the correct switch setting.

Adept PA-4 Power Chassis

Each Adept 550 robot requires two Dual B amplifier modules, resulting in a total of four amplifier modules per Dual Adept 550 robot system. If you are using the Model 3303 power chassis, then you must use two separate power chassis, and install two amplifier modules in each power chassis.

If you are using the Model 3306 power chassis, you can purchase one power chassis and install all four amplifier modules in one chassis; or you can purchase two power chassis, and install two amplifier modules in each power chassis.

Artisan Technology Group - Quality Instrumentation ... Guaranteed | (888) 88-SOURCE | www.artisantg.com

Cable Installation (Model 3303, with two power chassis)

The extra VJI module and two amplifier modules require additional cables that are shipped with the system. It is important to keep the cables organized and prevent cables from being interchanged by mistake. The table below shows a typical arrangement for cable assignments.

Table C-1. **Typical Robot-VJI-Amplifier Assignments in Dual Adept 550 Robot System**

Robot Number	VJI Module	Power Chassis	Amplifier Module
1	1 (Left)	1	1, 2
2	2 (Right)	2	1, 2

Make sure to clearly label or mark the cables so it will be obvious which robot they belong to, in case the cables have to be disconnected and re-installed.

C.3 Operation with the Manual Control Pendant (MCP)

The optional MCP can be used to control either robot in a Dual Adept 550 robot system. By default, the MCP controls robot 1. To switch to robot 2, press the DEV / F3 button on the MCP. The DEV2 LED turns on in this condition.

To switch back to robot 1, press the DEV / F3 button again. The DEV2 LED turns off.

See the *Manual Control Pendant User's Guide* for more information on using the MCP.

C.4 Programming Information

V^+ Language Programming

By default, Task 0 is used to control robot 1. Task 1 is normally recommended for robot 2. Use the SELECT ROBOT=2 and ATTACH instructions in your program to select robot 2. See the *V^+ Language User's Guide* and the *V^+ Language Reference Guide* for more information on these instructions.

V^+ Monitor Commands

By default, monitor commands such as HERE and WHERE apply to robot 1. Use the monitor command SELECT ROBOT=2 first when you need to display the location of robot 2.

> **NOTE:** The DISABLE POWER command shuts off high power to both robots in a Dual Adept 550 robot system.

The CALIBRATE monitor command will calibrate both robots. Robot 1 will be calibrated first, then robot 2.

Artisan Technology Group - Quality Instrumentation ... Guaranteed | (888) 88-SOURCE | www.artisantg.com

If you want to temporarily disable either robot and continue to use the other, you can use the DISABLE ROBOT[] command. For example DISABLE ROBOT[2] will cause V^+ to ignore robot 2. If you issue this command before you use the CALIBRATE command, then only one robot will be calibrated. Robot 1 can be then used normally. To re-enable robot 2, use the command ENABLE ROBOT[2].

C.5 Emergency Stop Circuit Shuts Off Both Robots

The Adept MV controller has many safety features, including the Emergency Stop circuit. These are designed to safely stop both robots simultaneously in the event of a problem. The Adept multi-robot system is designed for multiple robots operating in the same workcell. Therefore, if one robot has a fault, the other robot will also be stopped. A brief message will be displayed, indicating the problem. The message will also state which joint(s) and which robot is affected. The most common system messages are described in the *V^+ Operating System User's Guide*. A full list of system messages with complete explanation and suggested user actions is in the *V^+ Language Reference Guide*.

Examples of faults that can be detected by the Adept control system are *Envelope error* and *Motor stalled*. Both of these messages may mean that a robot has collided with an unexpected object in the workspace, therefore both robots will be stopped.

The Emergency Stop signal will also stop both robots connected to the same controller. It is not possible to use the E-Stop signal to stop only one robot. The Emergency Stop switches on the optional external Front Panel (VFP) and the optional Manual Control Pendant (MCP) shut off high power to both robots when the switch is pressed.

Artisan Technology Group - Quality Instrumentation ... Guaranteed | (888) 88-SOURCE | www.artisantg.com

Index

A

AC power
- 1-phase operation, Model 3303 31
- user-supplied cord, Model 3303 31
- voltage / current ratings, Model 3303 30
- voltage / current ratings, Model 3306 32

Adept Bulletin Board 8

Adept PA-4 power chassis, see power chassis

Air lines
- user, in robot 28

Air quality requirements 30

Amplifier module
- connections / indicators 21
- fuses 34
- installing 39
- interlock circuit 39
- overview 21
- removing 39

Arm signal cable
- installation 44

B

Brake-release button 51

Brakes
- description 51
- releasing J3 for manual movement 51

C

Cables
- system installation 40

Calibration, robot 48

Circuit breaker
- on power chassis 34

CleanRoom robot, Adept 550 68–69
- dimensions 69
- vacuum specifications 68

Customer service assistance
- phone numbers 7

Cycle time, specification 16

D

Dimensions
- clean room robot 69
- mounting brackets 65
- power chassis 63
- power chassis and controller 64
- robot 62
- user flange 26

Dowel pin, for keying on end-effectors 27

Drive belts, checking tension 55

Dual 550 robot system 72–74
- cable installation 73
- E-stop circuit 74
- installation 72
- programming 73
- using MCP with 73

Dual B5 amplifier module
- connections / indicators 21
- overview 21

E

Electrical grounding
- system information 33

Electrical lines
- user, in robot 28

End-effectors
- dowel pin 27
- installing 27

Envelope, working 15

F

Fan filter, cleaning 59

Force, specification 16

Fuses
- amplifier module 34
- chassis 34

H

Hardstops
- description 50
- specifications 50

Humidity
- required range, power chassis 30

Artisan Technology Group - Quality Instrumentation ... Guaranteed | (888) 88-SOURCE | www.artisantg.com

required range, robot 24

I

Installation
dual 550 robot system 72
joining power chassis to controller 34
power chassis 30–45
power chassis in rack or panel 37
robot 24–28
system cables 40

J

Joint 1 10
limits 10
motion 10
Joint 2 12
limits 12
motion 12
Joint 3 13
limits 13
Joint 4 13
limits 13
motion 13
Joint resolution, specification 16
Joint rotation, specification 16
Joint speed, specification 17

L

LEFTY 12
Lubrication, Joint 3 54

M

Maintenance 54–59
checking drive belts 55
cleaning fan filter 59
schedule 54
Manuals
related 2
Maximum payload, specification 16
Motor power cable, installation 41
Mounting brackets
dimensions 65
installation 37

O

Operation, turning on controller 48
Options, compatible with robot 17

P

Panel mounting 37
Power chassis
circuit breaker 34
connecting to controller 45
connecting to robot 41
dimensions 63
fuses 34
installation 30–45
interlock circuit 39
joining to controller 34
models 30
overview 20
system grounding information 33
turning on 48
Power chassis, Model 3303
AC power requirements 30
Power chassis, Model 3306
AC power requirements 32
connecting AC power cord 33
Power cord, Model 3306
specifications 33

R

Rack mounting 37
Reach, specification 16
Related manuals 2
Repeatability, specification 16
RIGHTY 12
Robot
cable ground connections 42
calibration 48
connecting to controller 44
dimensions 62
dual 550 system 72–74
installation 24–28
mounting bolt specifications 25
mounting procedure 25
mounting surface 25
programming 49
specifications 16
working envelope 15
Robot modifications
acceptable 6
unacceptable 6
Robotic Industries Association 4
Robotic safety 4

S

Safety 4
Safety shield
AC power, Model 3303 31

Artisan Technology Group - Quality Instrumentation ... Guaranteed | (888) 88-SOURCE | www.artisantg.com

SCARA 10
Softstops
    description 50
SPEC utility program
    to set softstops 50
Specifications 16
System safeguards 5

T

Temperature
    required range, power chassis 30
    required range, robot 24

U

Unpacking and inspection 24
User
    air lines, in robot 28
    electrical lines, in robot 28
User flange
    dimensions 26

V

V+ developer's manuals 3
Vertical stroke, specification 16
VJI to amp cable
    installation 45
VMEbus address
    for dual 550 robot system 72

W

Weight
    power chassis 17
    robot 17

Artisan Technology Group - Quality Instrumentation ... Guaranteed | (888) 88-SOURCE | www.artisantg.com

Artisan Technology Group - Quality Instrumentation ... Guaranteed | (888) 88-SOURCE | www.artisantg.com

Adept User's Manual Comment Form

We have provided this form to allow you to make comments about this manual, to point out any mistakes you may find, or to offer suggestions about information you want to see added to the manual. We review and revise user's manuals on a regular basis, and any comments or feedback you send us will be given serious consideration. Thank you for your input.

NAME_____ DATE_____

COMPANY _____

ADDRESS_____

PHONE_____

MANUAL TITLE:_____

PART NUMBER and REV level:_____

COMMENTS:

_____

_____

_____

_____

_____

_____

_____

_____

Artisan Technology Group - Quality Instrumentation ... Guaranteed | (888) 88-SOURCE | www.artisantg.com

Artisan Technology Group - Quality Instrumentation ... Guaranteed | (888) 88-SOURCE | www.artisantg.com

Artisan Technology Group - Quality Instrumentation ... Guaranteed | (888) 88-SOURCE | www.artisantg.com

00554-00030, Rev A

Artisan Technology Group - Quality Instrumentation ... Guaranteed | (888) 88-SOURCE | www.artisantg.com

Artisan Technology Group is an independent supplier of quality pre-owned equipment

Gold-standard solutions

Extend the life of your critical industrial, commercial, and military systems with our superior service and support.

We buy equipment

Planning to upgrade your current equipment? Have surplus equipment taking up shelf space? We'll give it a new home.

Learn more!

Visit us at **artisantg.com** for more info on price quotes, drivers, technical specifications, manuals, and documentation.

Artisan Scientific Corporation dba Artisan Technology Group is not an affiliate, representative, or authorized distributor for any manufacturer listed herein.

We're here to make your life easier. How can we help you today?

(217) 352-9330 | sales@artisantg.com | artisantg.com

ARTISAN® TECHNOLOGY GROUP