Analog Devices 5B47-K-05

High Performance Plug-In Signal Conditioner

Limited Availability
Used and in Excellent Condition

Open Web Page

https://www.artisantg.com/59462-1

All trademarks, brandnames, and brands appearing herein are the property of their respective owners.

ARTISAN TECHNOLOGY GROUP

Your **definitive** source for quality pre-owned equipment.

Artisan Technology Group
(217) 352-9330 | sales@artisantg.com | artisantg.com

- Critical and expedited services
- In stock / Ready-to-ship
- We buy your excess, underutilized, and idle equipment
- Full-service, independent repair center

Artisan Scientific Corporation dba Artisan Technology Group is not an affiliate, representative, or authorized distributor for any manufacturer listed herein.

5B Series 8 Channel Backplane

5B08 / 5B08-MUX

FEATURES

Mix and Match 5B Series I/O Module Capability
Factory Mutual (FM) Approved
Approved for Use in Class I, Division2, Groups A, B, C, and D Locations.
CE Certified: EMC Directive in Heavy Industrial Applications
1500 V rms Channel/Channel and Input/Output Isolation
Four Backplanes and Three Mounting card Options
8- Channels
-25°C to +85°C Temperature Range
Single Threaded Insert for module Hold Down

APPLICATIONS

Industrial Signal Conditioning
Industrial Signal Isolation
Industrial Signal Filtering

PRODUCT OVERVIEW

To address diverse applications, the 5B Series includes a family of backplanes and mounting cards which provide a complete signal conditioning solution. The 8-channel backplanes (models 5B08 and 5B08-MUX) can be mounted in a 19" x 3.5" panel space, providing different system configuration options.

FUNCTIONAL BLOCK DIAGRAM

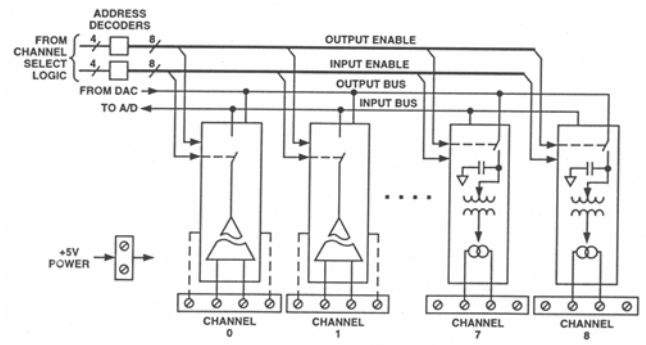

Figure 1 5B08 MUX Functional Block Diagram

This backplane provides four screw terminals per channel for all field connections. These connections satisfy all transducer inputs, process current outputs and provide transducer excitation when necessary. A cold junction temperature sensor (model AC1361) sensor is also supplied on each channel to accommodate thermocouple input modules. A pair of pin sockets permits installation of the AC1362 current sensing resistor used with the 5B32 current input module on all 8-channel backplanes, a 26-pin system interface connector provides high level I/O for all channels. All 5B Series backplanes and sockets require a regulated +5VDC external power source.

Rev. 0
Information furnished by Analog Devices is believed to be accurate and reliable. However, no responsibility is assumed by Analog Devices for its use, nor for any infringements of patents or other rights of third parties that may result from its use. Specifications subject to change without notice. No license is granted by implication or otherwise under any patent or patent rights of Analog Devices. Trademarks and registered trademarks are the property of their respective companies.

One Technology Way, P.O. Box 9106, Norwood, MA 02062-9106, U.S.A.
Tel: 781.329.4700 **www.analog.com**
Fax: 781.326.8703 **© 2005 Analog Devices, Inc. All rights reserved.**

Artisan Technology Group - Quality Instrumentation ... Guaranteed | (888) 88-SOURCE | www.artisantg.com

GENERAL DESCRIPTION

Model 5B08 System Connectors – Signal connections between the 5B08 and the associated measurement and control system are made with two identical 26-pin connectors (P1 & P2), similar to the 16-channel model 5B01 backplane. Reference to these connectors is electrically identical and may be useful if a 5B08 is used for both analog input and analog output and the data acquisition system has separate input or output connectors. The I/O connectors provide a signal path for each channel and, in addition, a number of grounding pins are available to provide inter-channel shield conductors in the ribbon cable. In some cases, discussed below, the ground conductors will not provide an accurate signal reference, so a SENSE pin is also provided in the connectors. Several jumper and component options on the 5B08 provide optimum ground connections for various applications.

Model 5B08 Output Channel Selection – To Configure Model 5B08 I/O for different system needs, on-board jumpers are provided. A family of eight 3-pin jumpers, j8 through J15, allows the user to assign the 5B08 I/O to either the upper eight I/O pins (CH0-CH7) or the lower eight I/O pins (CH8-CH15). This capability allows two 8-channel 5B08 backplanes to be used in a 16 channel configuration, with all I/O assigned to the 16 unique I/O pins, CH0 – CH15.

Model 5B08 Inter-channel Jumpers – The 5B08 offers the user the ability to easily connect the voltage output of any 5B Series input module directly to the voltage input of an adjacent output module (e.g., Model 5B39) by placing a jumper over two pins J1, J2, J3, J4, J5, J6, J7. This feature can be used to provide an isolated current output form an isolated input module. This results in both isolated voltage and isolated current outputs from a single sensor input signal.

MODEL 5B08-MUX Backplane – The 5B08-MUX incorporates input and output buses that take advantage of the internal series output switches in the 5B Series input modules as well as the track-and-hold circuit in the output modules. Designers integrating the 5B08-MUX into a measurement and control system do not need external multiplexers and can use a single digital-to-analog converter to serve numerous output channels. Digital outputs from the host data acquisition system are used to address the 5B Series modules and designate inputs and outputs. Only one analog input, one analog output and a number of digital outputs are required to address up to 64 analog input/output channels using eight 5B08-MUX backplanes.

Model 5B08-MUX Address Jumpers – 5B08-MUX backplane can hold eight 5B Series modules in any combination of inputs or outputs. Address decoders on the backplane determine which module is read (input type) or driver (output type). Separate decoders are provided for inputs and outputs. To permit system expansion, up to eight 5B08-MUX backplanes can be daisy-chained on the system I/O ribbon cable for a total of 64 channels. Jumpers on each backplane (labeled J1 – J9 and J10 – J18) determine the block of eight addresses assigned to each backplane. Input (read) and output (write) addressing are completely independent; in all cases, Jumpers J1-J9 control inputs and J10-J18 control outputs. Independent addressing might be used, for example, to update output modules without interrupting the monitoring of input modules.

Figure 2

Artisan Technology Group - Quality Instrumentation ... Guaranteed | (888) 88-SOURCE | www.artisantg.com

5B08 / 5B08-MUX Specifications
(typical @ +25°C and V_s =+5 V dc Power)

Description	Model 5B08	Model 5B08-MUX
Number of Channels	8	8
ISOLATION		
Input-to-Output Continuous	1500 V rms, Maximum	1500 V rms, Maximum
Channel-to-Channel Continuous	1500 V rms, Maximum	1500 V rms, Maximum
MECHANICAL DIMENSIONS – with modules	3.5” x 10.0” x 3.2”	3.5” x 10.0” x 3.2”
	(88.9 mm x 240 mm x 81.3 mm)	(88.9 mm x 240 mm x 81.3 mm)
WEIGHT	7 oz. (200 g)	7 oz. (200 g)
MOUNTING STANDOFFS	5	5
COLD JUNCTION TEMPERATURE SENSORS		
Number provided on backplane	8	8
Type	Model AC1361	Model AC1361
Initial Accuracy @ +25°C	±0.25°C (±0.75°C, maximum)	±0.25°C (±0.75°C, maximum)
Accuracy +5°C to +45°C	±0.5°C (±0.0125°C/°C)	±0.5°C (±0.0125°C/°C)
SYSTEM I/O CONNECTOR		
Number	2, 26-pin	1, 26-pin
Type	Amp 746290-6	Amp 746290-6
ADDRESS ENABLE INPUTS		
Max Logic “0”	N/A	+0.8 V
Min Logic “1”	N/A	+2.0 V
Max Logic “1”	N/A	+7.0 V
POWER SUPPLY OPTIONS		
Voltage; Operating	+5 VDC ±5%	+5 VDC ±5%
Voltage; Max Safe Limit – with modules	+6.0 VDC Max.	+6.0 VDC Max.
Current – without modules	13mA	40mA
Fuse; (F1)	4 Amp Littelfuse © Type 252 004	4 Amp Litttlefuse © Type 252 004
Environmental		
Temperature Range		
Rated Performance	-25°C to +85°C	-25°C to +85°C
Operating	-40°C to +85°C	-40°C to +85°C
Storage	-40°C to +85°C	-40°C to +85°C
Relative Humidity, 24 hours	0 to 95% @ +60°C noncondensing	0 to 95% @ +60°C noncondensing

Artisan Technology Group - Quality Instrumentation ... Guaranteed | (888) 88-SOURCE | www.artisantg.com

PIN CONFIGURATION AND FUNCTIONAL DESCRIPTION (5B08)

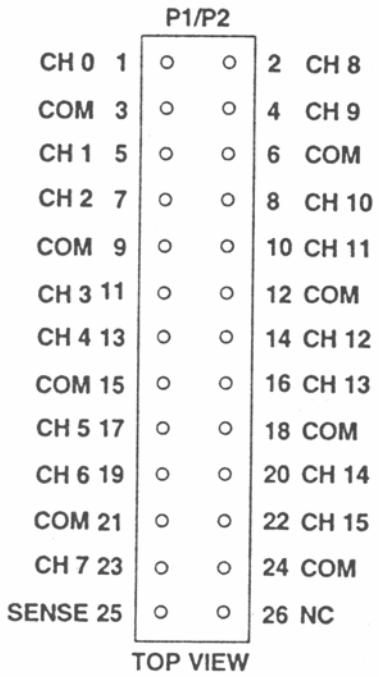

Figure 3 5B08 System I/O Connector

Table 1. Pin Function Descriptions—

Pin No.	Description
1	CHANNEL 0
2	CHANNEL 8
3	COMMON
4	CHANNEL 9
5	CHANNEL 1
6	COMMON
7	CHANNEL 2
8	CHANNEL 10
9	COMMON
10	CHANNEL 11
11	CHANNEL 3
12	COMMON
13	CHANNEL 4
14	CHANNEL 12
15	COMMON
16	CHANNEL 13
17	CHANNEL 5
18	COMMON
19	CHANNEL 6
20	CHANNEL 14
21	COMMON
22	CHANNEL 15
23	CHANNEL 7
24	COMMON
25	SENSE 25
26	NO CONNECTION

ESD CAUTION

ESD (electrostatic discharge) sensitive device. Electrostatic charges as high as 4000 V readily accumulate on the human body and test equipment and can discharge without detection. Although this product features proprietary ESD protection circuitry, permanent damage may occur on devices subjected to high energy electrostatic discharges. Therefore, proper ESD precautions are recommended to avoid performance degradation or loss of functionality.

Artisan Technology Group - Quality Instrumentation ... Guaranteed | (888) 88-SOURCE | www.artisantg.com

PIN CONFIGURATION AND FUNCTIONAL DESCRIPTION (5B08-MUX)

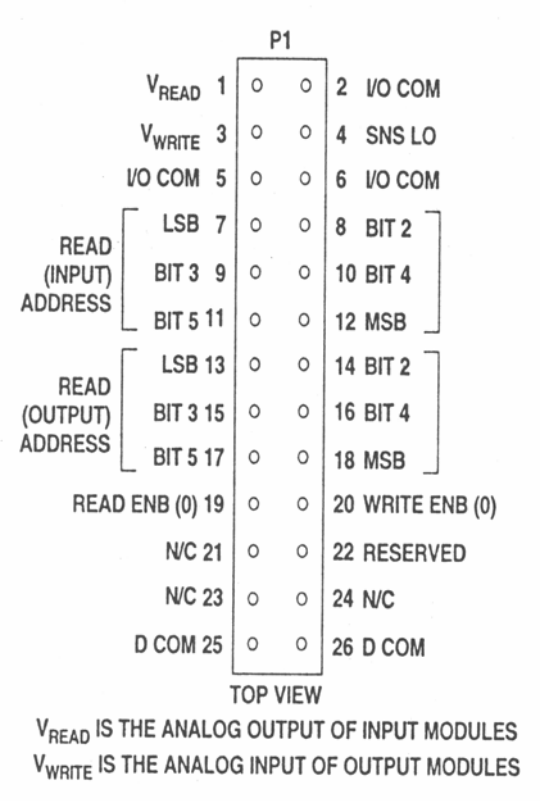

Figure 4 5B08-MUX System I/O Connector

Table 2. Pin Function Descriptions—

Pin No.	Description
1	V READ
2	I/O COM
3	V WRITE
4	SNS LO
5	I/O COM
6	I/O COM
7	READ (INPUT) ADDR LSB
8	READ (INPUT) ADDR BIT 2
9	READ (INPUT) ADDR BIT 3
10	READ (INPUT) ADDR BIT 4
11	READ (INPUT) ADDR BIT 5
12	READ (INPUT) ADDR MSB
13	READ (OUTPUT) ADDR LSB
14	READ (OUTPUT) ADDR BIT 2
15	READ (OUTPUT) ADDR BIT 3
16	READ (OUTPUT) ADDR BIT 4
17	READ (OUTPUT) ADDR BIT 5
18	READ (OUTPUT) ADDR MSB
19	READ ENB (0)
20	WRITE ENB (0)
21	NO CONNECTION
22	RESERVED
23	NO CONNECTION
24	NO CONNECTION
25	D COM
26	D COM

ESD CAUTION

ESD (electrostatic discharge) sensitive device. Electrostatic charges as high as 4000 V readily accumulate on the human body and test equipment and can discharge without detection. Although this product features proprietary ESD protection circuitry, permanent damage may occur on devices subjected to high energy electrostatic discharges. Therefore, proper ESD precautions are recommended to avoid performance degradation or loss of functionality.

Artisan Technology Group - Quality Instrumentation ... Guaranteed | (888) 88-SOURCE | www.artisantg.com

OUTLINE DIMENSIONS

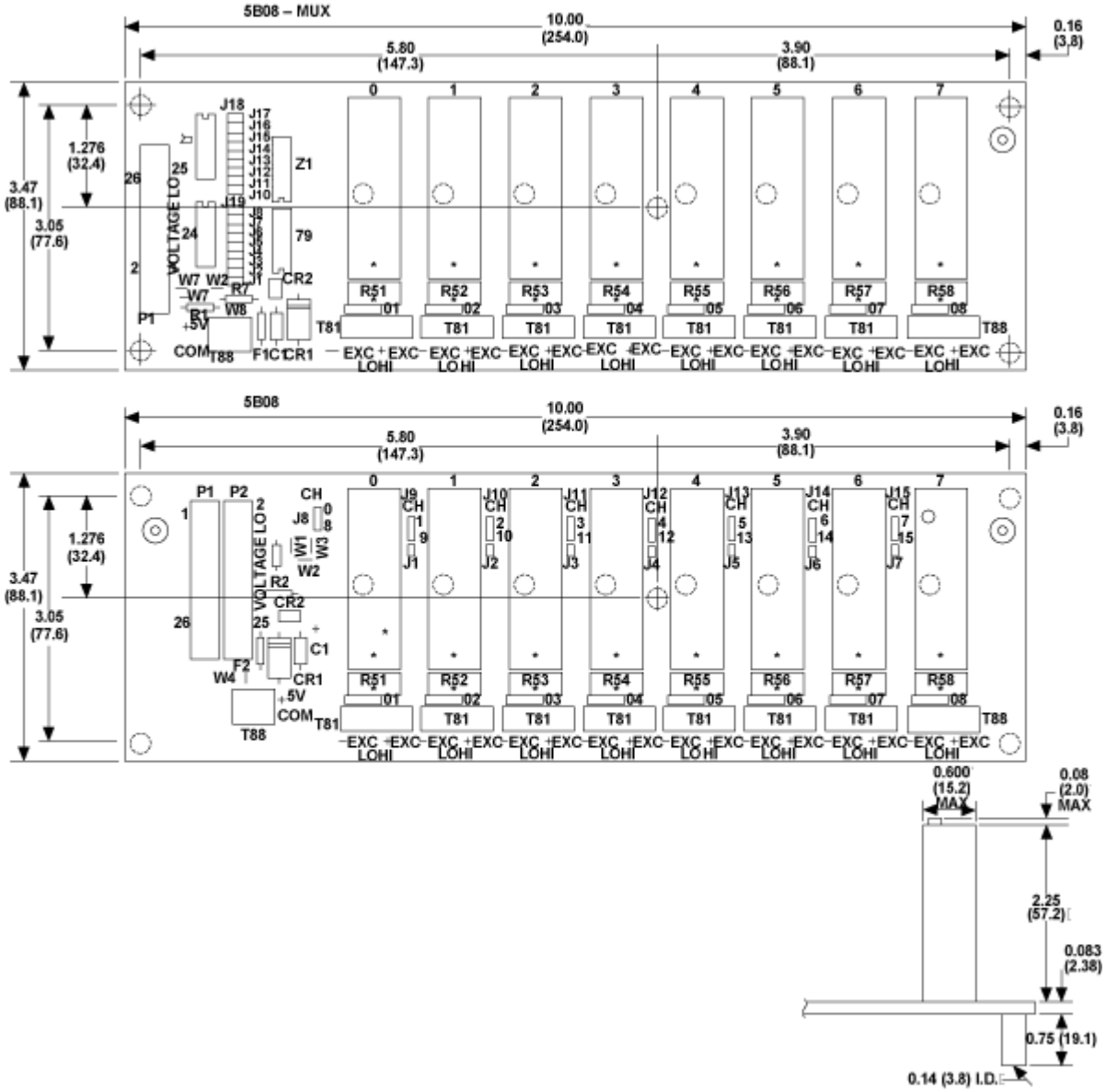

Figure 5 Outline Dimensions

Artisan Technology Group - Quality Instrumentation ... Guaranteed | (888) 88-SOURCE | www.artisantg.com

NOTES

Artisan Technology Group - Quality Instrumentation ... Guaranteed | (888) 88-SOURCE | www.artisantg.com

NOTES

© 2005 Analog Devices, Inc. All rights reserved. Trademarks and registered trademarks are the property of their respective companies.
D05413-0-2/05(0)

www.analog.com

Artisan Technology Group - Quality Instrumentation ... Guaranteed | (888) 88-SOURCE | www.artisantg.com

Artisan Technology Group is an independent supplier of quality pre-owned equipment

Gold-standard solutions

Extend the life of your critical industrial, commercial, and military systems with our superior service and support.

We buy equipment

Planning to upgrade your current equipment? Have surplus equipment taking up shelf space? We'll give it a new home.

Learn more!

Visit us at **artisantg.com** for more info on price quotes, drivers, technical specifications, manuals, and documentation.

Artisan Scientific Corporation dba Artisan Technology Group is not an affiliate, representative, or authorized distributor for any manufacturer listed herein.

We're here to make your life easier. How can we help you today?

(217) 352-9330 | sales@artisantg.com | artisantg.com

ARTISAN® TECHNOLOGY GROUP