Analog Devices 5B47-K-05

High Performance Plug-In Signal Conditioner

Limited Availability
Used and in Excellent Condition

Open Web Page

https://www.artisantg.com/59462-1

All trademarks, brandnames, and brands appearing herein are the property of their respective owners.

ARTISAN TECHNOLOGY GROUP

Your **definitive** source for quality pre-owned equipment.

Artisan Technology Group
(217) 352-9330 | sales@artisantg.com | artisantg.com

- Critical and expedited services
- In stock / Ready-to-ship
- We buy your excess, underutilized, and idle equipment
- Full-service, independent repair center

Artisan Scientific Corporation dba Artisan Technology Group is not an affiliate, representative, or authorized distributor for any manufacturer listed herein.

Isolated, Linearized Thermocouple Input

5B47

FEATURES

Isolated Thermocouple Input.
Amplifies, Protects, Filters, and Isolates Thermocouple Input
Works with J, K, T, E, R, S, and B-type thermocouple.
Generates aisolated and protected precision output of 0 to +5V.
Module circuitry can withstand 240v rms at the input screw-terminals.
All 5B47 series modules are mix-and-match and Hot Swappable.

APPLICATIONS

Industrial signal conditioning
Industrial signal isolation
Industrial signal filtering

PRODUCT OVERVIEW

The 5B Series represents an innovative generation of low cost, high performance plug-in signal conditioners. Designed for industrial applications, these modules incorporate highly reliable transformer-based isolation and automated surface-mount manufacturing technology. They are compact, economical components whose performance exceeds that available from more expensive devices. Combining 1500 V rms continuous isolation, +0.05% calibrated accuracy, small size and low cost, the 5B Series is an attractive alternative to expensive signal conditioners and in-house designs

All modules are potted and identical in pin-out and size (2.27" x 2.32" x 0.595"). They can be mixed and matched, permitting users to address their exact needs, and may be "hot swapped without disturbing field wiring or power. The isolated input modules provide 0 to +5V or +5V outputs and accept J, K, T, E, R, S, N, or B type thermocouples.

These modules feature complete signal conditioning functions including 240 V rms input protection, filtering, chopper stabilized low drift +1 uV/oC amplification, 1500 V rms isolation, and sensor excitation when required.

All modules feature excellent common mode rejection and meet industrial transient surge withstand specifications.

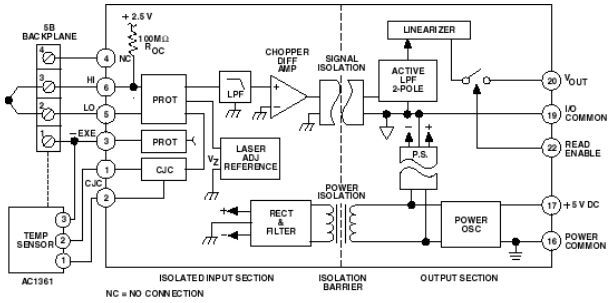

Figure 1. 5B47 Functional Block Diagram

There are also a number of backplanes and mounting sockets which provide a complete signal conditioning solution for end users. Each backplane incorporates screw terminals for field wiring inputs and outputs and cold junction sensors for thermocouple applications.

These signal conditioners are designed to provide an easy and convenient solution to signal conditioning problems of both designers and end users in measurement and control applications. Typical uses include microcomputer-based measurement systems, standard data acquisition systems, programmable controllers, analog recorders and dedicated control systems. The 5 B series modules are ideally suited to applications where monitoring and control of temperature, pressure, flow, rotation and other analog signals are required.

The 5B Series modules and backplanes are approved by Factory Mutual (FM) and the 5B Series modules are approved by the Canadian Standards Association (CSA) for use in Class 1, Division 2, Groups A, B, C, and D locations. These approvals certify that the 5B Series is suitable for use in locations where a hazardous concentration of flammable gas may exist only under fault conditions of operation. Equipment of this category is called "nonincendive" and they need no special enclosures or other physical safeguards.

The 5B series modules and backplanes have been tested and passed the stringent heavy industrial requirements of the European Union's electromagnetic compatibility (ENC) directive – EN50082-1 and EN50081-2. When used according to installation directions (refer to 5B series User Manual), any errors caused by EMI/RFI interference will be less than 0.1% of the full scale 5B measurement range for field strengths up to 10 V/M and frequencies up to 1 GHz.

FUNCTIONAL BLOCK DIAGRAM

Rev. 0
Information furnished by Analog Devices is believed to be accurate and reliable. However, no responsibility is assumed by Analog Devices for its use, nor for any infringements of patents or other rights of third parties that may result from its use. Specifications subject to change without notice. No license is granted by implication or otherwise under any patent or patent rights of Analog Devices. Trademarks and registered trademarks are the property of their respective companies.

One Technology Way, P.O. Box 9106, Norwood, MA 02062-9106, U.S.A.
Tel: 781.329.4700 **www.analog.com**
Fax: 781.326.8703 **© 2004 Analog Devices, Inc. All rights reserved.**

Artisan Technology Group - Quality Instrumentation ... Guaranteed | (888) 88-SOURCE | www.artisantg.com

GENERAL DESCRIPTION

The 5B47 is a single-channel signal conditioning module that interfaces, amplifies and filters J, K, T, E, R, S, and B-type thermocouple. The module provides an isolated and protected precision output of 0 to + 5 V.

The 5B47 internally linearizes its input signal to provide an output that is linear with temperature. Accuracy for each type of sensor is specified in the 5B47 model table. (See Model 5B37 for non-linearized conditioning of thermocouple signals.)

Accurate and System-Ready - Internal cold-junction compensation largely corrects errors arising from parasitic thermocouples formed by thermocouple connection to the input screw terminals, providing an accuracy of ±0.25ºC @ ±25ºC ambient temperature. The module generates a predictable upscale signal to indicate an open thermocouple; for a downscale response, connect a 20MΩ, 0.25W resistor across screw terminals 1 and 3.

The 5B47 protects the computer side from damage due to field-side over-voltage faults. All models withstand 240V rms at their input terminals without damage, thereby shielding computer-side circuitry from field-side over-voltage conditions. Further, the 5B47 is mix-and-match and hot-swappable with other 5B Series modules, so can be inserted or removed from any socket in the same backplane without disrupting system power.

Inside the 5B47 Module – A chopper-stabilized input amplifier provides low drift and stable gain. At the amplifier input, a stable, laser-trimmed zero-scale input voltage is subtracted from the input signal to set the zero-scale value. For user convenience, the zero can be optionally factory-set to meet custom needs. This allows suppression of a zero-scale input value many times larger than the total span for precise expanded-scale measurements.

Internal multi-pole low-pass filtering with a 4-Hz cutoff (-3 dB) provides 60 dB of normal-mode rejection (noise on signal) and enhancement of common-mode rejection (noise on signal return) at 60 Hz, enabling accurate measurement of small signals in high electrical noise.

Signal isolation by transformer coupling uses a proprietary modulation technique for linear, stable and reliable performance. The differential input circuit on the field side is fully floating, eliminating the need for any input grounding. A demodulator on the computer side of the signal transformer recovers the original signal, which is then filtered and buffered to provide a low-noise, low-impedance output signal. The output common must be kept within ±3 V of power common.

A series output switch eliminates the need for external multiplexing in many applications. The switch is turned on by an active-low enable input. If the switch is to be on at all times, the enable-input should be grounded to power common as it is on the 5B01 and 5B08 backplanes.

Figure 2

Artisan Technology Group - Quality Instrumentation ... Guaranteed | (888) 88-SOURCE | www.artisantg.com

5B47 Models Available

Model	Input Type	Input Range	Output Range	Accuracy[1]
5B47-J-01	Type J	0°C to +760°C (+32°F to +1400°F)	0 V to +5 V	±1.1°C
5B47-J-02	Type J	-100°C to +300°C (-148°F to +572°F)	0 V to +5 V	±0.5°C
5B47-J-03	Type J	0°C to +500°C (+32°F to +932°F)	0 V to +5 V	±0.6°C
5B47-K-04	Type K	0°C to +1000°C (+32°F to +1832°F)	0 V to +5 V	±1.3°C
5B47-K-05	Type K	0°C to +500°C (+32°F to +932°F)	0 V to +5 V	±0.6°C
5B47-T-06	Type T	-100°C to +400°C (-148°F to +752°F)	0 V to +5 V	±1.4°C
5B47-T-07	Type T	0°C to +200°C (+32°F to +392°F)	0 V to +5 V	±0.5°C
5B47-E-08	Type E	0°C to +1000°C (+32°F to +1832°F)	0 V to +5 V	±1.7°C
5B47-R-09	Type R	+500°C to +1750°C (+932°F to +3182°F)	0 V to +5 V	±2.5°C
5B47-S-10	Type S	+500°C to +1750°C (+932°F to +3182°F)	0 V to +5 V	±2.4°C
5B47-B-11	Type B	+500°C to +1800°C (+932°F to +3272°F)	0 V to +5 V	±5.1°C
5B47-Custom	Type J, K, T, E, R, S, B	*	*	

[1]The CJC sensor accuracy should be added to the module accuracy for a system accuracy.
* Custom Input/Output ranges are available. Refer to configuration guide.

5B47 Specifications

Description	Model 5B47
Input Ranges	
Standard Ranges	Refer to Model Table
Custom Ranges	±5 mV to ±500 mV
Output Ranges (R_L > 50 k Ω)	+1 V to +5 V or 0 V to +5 V
Accuracy[1]	
Initial @ +25°C	See Model Table
Input Offset vs. Temperature[2]	±1 µV/°C
Output Offset vs. Temperature	±20 µV/°C
Gain vs. Temperature	±0.0025% of Reading/°C
Cold Junction Compensation	
Initial Accuracy @ +25°C[3]	±0.25°C (±0.75°C, maximum)
Accuracy, +5°C to +45°C	±0.5°C (±0.0125°C/°C)
Input Bias Current	-25 nA
Input Resistance	
Power On	5 M Ω
Power Off	40 k Ω
Overload	40 k Ω
Noise	
Input, 0.1 Hz to 10 Hz Bandwidth	0.2 µV rms

Artisan Technology Group - Quality Instrumentation ... Guaranteed | (888) 88-SOURCE | www.artisantg.com

Output, 100 kHz Bandwidth	500 µV rms
Bandwidth, -3 dB	4 Hz
Output Rise Time, 10% to 90% Span	200 ms

Common-Mode Voltage (CMV)

Input-to-Output, Continuous	1500 V rms, maximum
Output-to-Power, Continuous[4]	±3 V, maximum
Transient	ANSI/IEEE C37.90.1-1989

Common Mode Rejection (CMR)

1 k Ω Source Imbalance, 50/60 Hz	160 dB
Normal Mode Rejection (NMR), 50/60 Hz	60 dB

Input Protection

Continuous	240 V rms, maximum
Transient	ANSI/IEEE C37.90.1-1989
Output Resistance	50 Ω
Voltage Output Protection	Continuous Short to Ground
Output Selection Time	6 µs @ C_{load} = 0 to 2,000 pF

Output Enable Control

Max Logic "0"	+1 V
Min Logic "1"	+2.5 V
Max Logic "1"	+36 V
Input Current "0"	0.4 mA
Open Input Response	Upscale
Open Input Response Time	10 seconds
Power Supply Voltage	+5 V ±5%
Power Supply Current	30 mA
Power Supply Sensitivity, RTI	±2 µV/% of V_s
Mechanical Dimensions	2.275" x 2.375" x 0.595" (57.8 mm x 59.1 mm x 15.1 mm)

Environmental

Temperature Range

Rated Performance	-25°C to +85°C
Operating	-40°C to +85°C
Storage	-40°C to +85°C
Relative Humidity	0 to 93% @ +40°C non-condensing
RFI Susceptibility	±0.5% Span error @ 400 MHz, 5 Watt, 3 ft

Includes the combined effects of repeatability, hysteresis, and nonlinearity and assumes R_L > 50 k Ω. Loads heavier than 50 k Ω will degrade nonlinearity and gain temperature coefficient.
[2]±1 µV/°C is equivalent to 0.02°C/°C for Type J thermocouples; 0.025°C/°C for Type K and T thermocouples; 0.016°C/°C for Type E thermocouples; 0.168°C/°C for Type R and S thermocouples.
[3]When used with the model AC1361 CJC sensor (see Accessories section), which is provided on each channel of 5B Series backplanes and mounting cards.
[4]The output common must be kept within ±3 V of power common.
Specifications subject to change without notice.

Artisan Technology Group - Quality Instrumentation ... Guaranteed | (888) 88-SOURCE | www.artisantg.com

PIN CONFIGURATIONS AND FUNCTIONAL DESCRIPTIONS

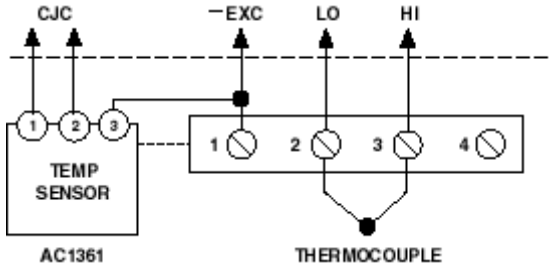

Figure 3 5B47 Input Field Connections

Table 1. Pin Function Descriptions—

Pin No.	Description
1	-EXC
2	LO
3	HI
4	N/C

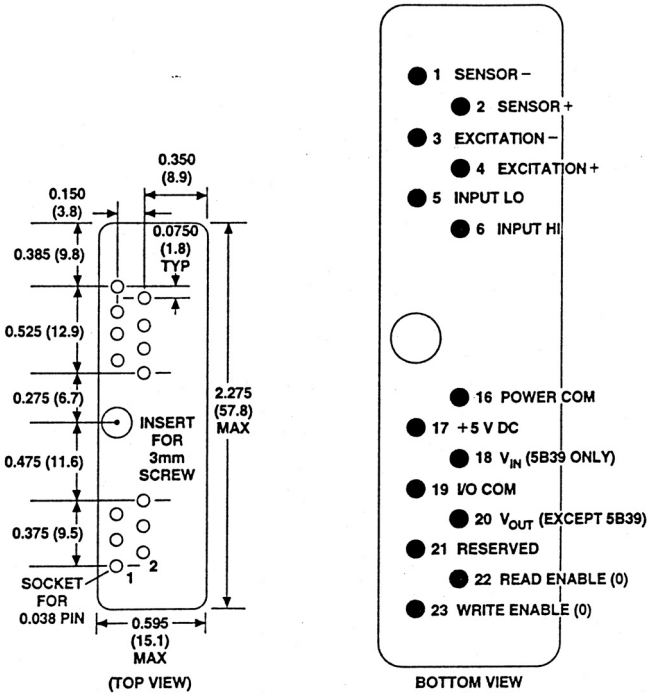

Figure 4 . Model 5B Series Module, with pin-out assignments.

ESD CAUTION

ESD (electrostatic discharge) sensitive device. Electrostatic charges as high as 4000 V readily accumulate on the human body and test equipment and can discharge without detection. Although this product features proprietary ESD protection circuitry, permanent damage may occur on devices subjected to high energy electrostatic discharges. Therefore, proper ESD precautions are recommended to avoid performance degradation or loss of functionality.

Artisan Technology Group - Quality Instrumentation ... Guaranteed | (888) 88-SOURCE | www.artisantg.com

OUTLINE DIMENSIONS

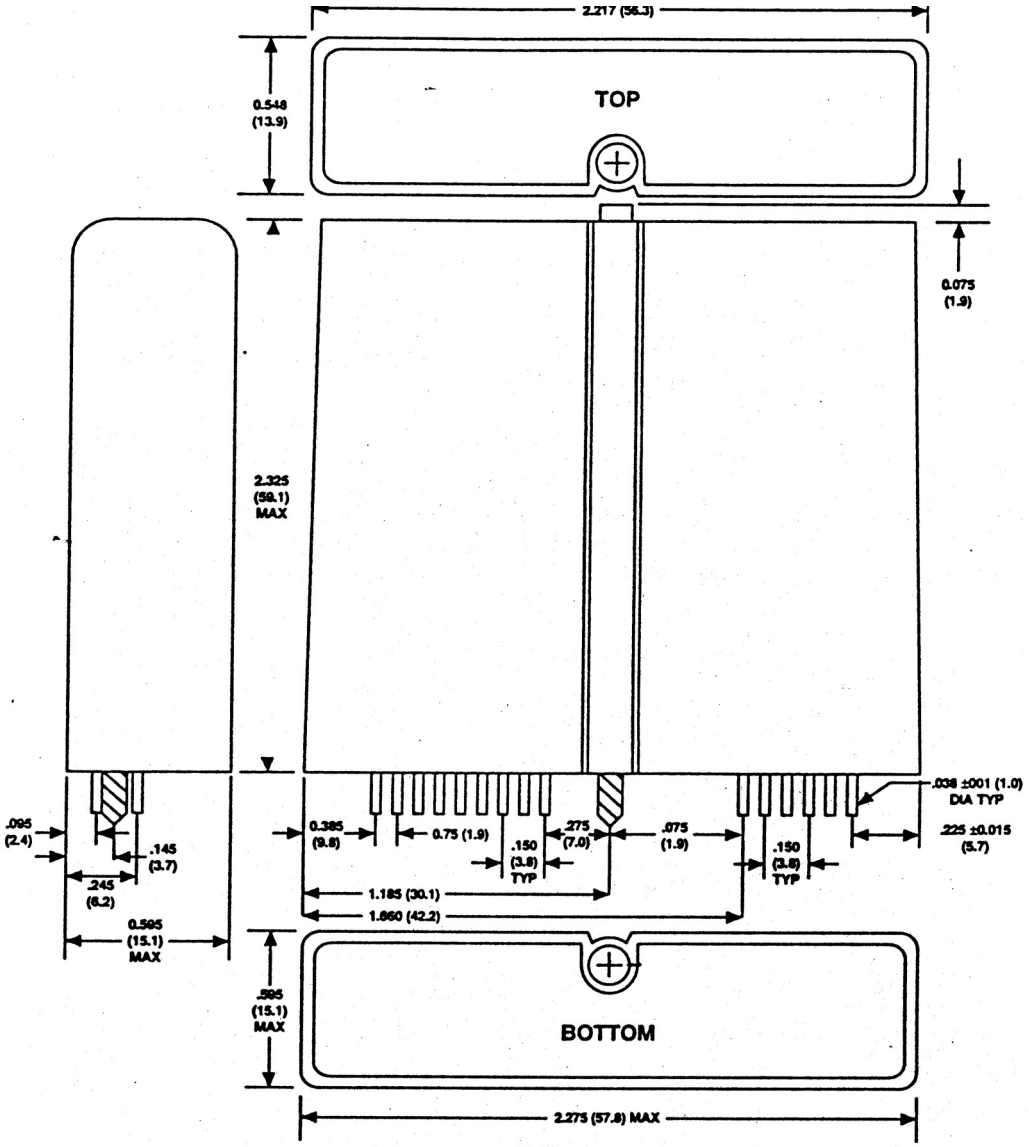

Figure 5. Outline Dimensions

Artisan Technology Group - Quality Instrumentation ... Guaranteed | (888) 88-SOURCE | www.artisantg.com

NOTES

Artisan Technology Group - Quality Instrumentation ... Guaranteed | (888) 88-SOURCE | www.artisantg.com

NOTES

© 2004 Analog Devices, Inc. All rights reserved. Trademarks and registered trademarks are the property of their respective companies.
D05102-0-9/04(0)

ANALOG DEVICES

www.analog.com

Artisan Technology Group - Quality Instrumentation ... Guaranteed | (888) 88-SOURCE | www.artisantg.com

Artisan Technology Group is an independent supplier of quality pre-owned equipment

Gold-standard solutions

Extend the life of your critical industrial, commercial, and military systems with our superior service and support.

We buy equipment

Planning to upgrade your current equipment? Have surplus equipment taking up shelf space? We'll give it a new home.

Learn more!

Visit us at **artisantg.com** for more info on price quotes, drivers, technical specifications, manuals, and documentation.

Artisan Scientific Corporation dba Artisan Technology Group is not an affiliate, representative, or authorized distributor for any manufacturer listed herein.

We're here to make your life easier. How can we help you today?

(217) 352-9330 | sales@artisantg.com | artisantg.com

ARTISAN® TECHNOLOGY GROUP