Control Technology 2600XM-5

Automation Controller

$745.00

In Stock

Qty Available: 5+

Used and in Excellent Condition

Open Web Page

https://www.artisantg.com/61340-21

ARTISAN TECHNOLOGY GROUP

Your **definitive** source for quality pre-owned equipment.

Artisan Technology Group

(217) 352-9330 | sales@artisantg.com | artisantg.com

All trademarks, brandnames, and brands appearing herein are the property of their respective owners.

- Critical and expedited services
- In stock / Ready-to-ship
- We buy your excess, underutilized, and idle equipment
- Full-service, independent repair center

Artisan Scientific Corporation dba Artisan Technology Group is not an affiliate, representative, or authorized distributor for any manufacturer listed herein.

Model 2203 Combination 16 Input / 16 Output Module Installation Guide

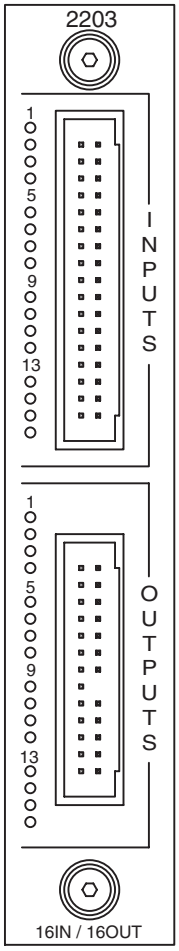

Doc. No. 2203IG
Revision C
July 2007

Copyright © 2001 - 2007 Control Technology Corporation.
All Rights Reserved.
Printed in USA.

The information in this document is subject to change without notice. The software described in this document is provided under license agreement and may be used or copied only in accordance with the terms of the license agreement.

The information, drawings, and illustrations contained herein are the property of Control Technology Corporation. No part of this manual may be reproduced or distributed by any means, electronic or mechanical, for any purpose other than the purchaser's personal use, without the express written consent of Control Technology Corporation.

The following are trademarks of Control Technology Corporation:

- Quickstep
- CTC Monitor
- CTC Utilities

Windows is a trademark of Microsoft Corporation.

Contents

Notes to Readers 1
Related Documents 2
Formatting Conventions 2
Contacting Control Technology Corporation 3
Your Comments 3
System Overview 5
Self-Powered Inputs 5
Open-Collector Outputs 5
2203 Description 6
2203 Connection Diagrams 7
Specifications 8
Board Handling Precautions 10
Installing the 2203 Module 11
Connecting a Digital Input 12
Using Solid-State Sensors 12
Connecting Digital Outputs 14
Using Open-Collector Outputs 14
Connecting Multiple Devices 16
Connecting to a Second External Supply 16

Control Technology Corporation proprietary. Reproduction or distribution forbidden.

This page is intentionally left blank.

Control Technology Corporation proprietary. Reproduction or distribution forbidden.

Notes to Readers

The *Model 2203 Installation Guide* provides the following information:

- System Overview -- describes the 2203's basic features.
- Description and Connection Diagrams -- an overview of the 2203's basic functions; pinout diagrams for its input and output connectors.
- Specifications -- general specifications; hardware and firmware revision levels.
- Board Handling Precautions-- contains general guidelines on handling printed circuit boards with ESD devices.
- Installation -- describes how to install the 2203 module in a CTC controller.
- Applications Guide -- contains technical information on the 2203's input and output features.

Control Technology Corporation proprietary. Reproduction or distribution forbidden.

Related Documents

The following documents contain additional information:

- For information on Quickstep, refer to the *Quickstep™ Language and Programming Guide* or the *Quickstep™ User Guide*.
- For information on the registers in your controller, refer to the *Register Reference Guide* (available at www.ctc-control.com).
- For information on Microsoft Windows or your PC, refer to the manuals provided by the vendor.

Formatting Conventions

The following conventions are used in this book:

ALL CAPS BOLDFACE	Identifies DOS, Windows, and installation program names.
Boldface	Indicates information you must enter, an action you must perform, or a selection you can make on a dialog box or menu.
Italics	Indicates a word requiring an appropriate substitution. For example, replace *filename* with an actual file name.
Text_Connected_With_Underlines	Indicates symbolic names used in Quickstep programs. Step Names are ALL_CAPITALS. Other symbolic names can be Initial_Capitals or lower_case.
SMALL CAPS	Identifies the name of Quickstep instructions in text.
`Courier font`	Identifies step names, comments, output changes, and Quickstep instructions appearing in the Quickstep editor.
Art Code 2217F1	Identifies the file name of a particular graphic image.

Control Technology Corporation proprietary. Reproduction or distribution forbidden.

Contacting Control Technology Corporation

Control Technology Corporation is located in Massachusetts. Our business hours are 8:30 AM to 5:00 PM. EST (Eastern Standard Time).

Contact Method	Address or Number
E-Mail:	
Technical Support:	help@ctc-control.com
Technical Publications:	techpubs@ctc-control.com
Website:	www.ctc-control.com
Telephone:	508.435.9595 and 800.282.5008
FAX:	508.435.2373
Mail:	Control Technology Corporation 25 South Street Hopkinton, MA 01748

Your Comments

Suggestions and comments about this or any other Control Tech document can be e-mailed to the Technical Publications Group at techpubs@ctc-control.com.

Control Technology Corporation proprietary. Reproduction or distribution forbidden.

This page is intentionally left blank.

Control Technology Corporation proprietary. Reproduction or distribution forbidden.

System Overview

The Model 2203 I/O module has 16 digital input and output channels. Self-powered inputs make it easy to interface with many types of sensors and open-collector outputs can drive solenoid valves and similar loads. The controller's +24 V supply is available on each I/O channel for supplying power to output devices and electronic sensors used on the 2203's inputs. Each channel also has an independent LED status indicator that simplifies troubleshooting and setup.

Self-Powered Inputs

The module's 16 input channels are self-powered. Each input is resistively pulled-up to the controller's 24V supply and is activated by an external switch closure to the common for this supply. This feature allows easy connection to such components as Hall-effect sensors, proximity sensors (when outfitted with sinking outputs), external electronic sensors that possess open-collector outputs, and mechanical switches.

Open-Collector Outputs

The module's 16 output channels are open-collectors and can accommodate many types of 24 VDC load devices. To use these outputs, connect one side of each load device to +24 V and connect the other side to the open-collector output. When the output is activated under program control, it switches to common, completes the circuit, and actuates the device. This makes it easy to interface with loads such as solenoid valves, indicator lights, small motors, and motor installers. The current level is limited to 500 mA/output and a total limit of 5A for the module.

Control Technology Corporation proprietary. Reproduction or distribution forbidden.

2203 Description

Figure 1 shows the 2203's faceplate and describes its different features.

Figure 1. 2203 Faceplate and Features

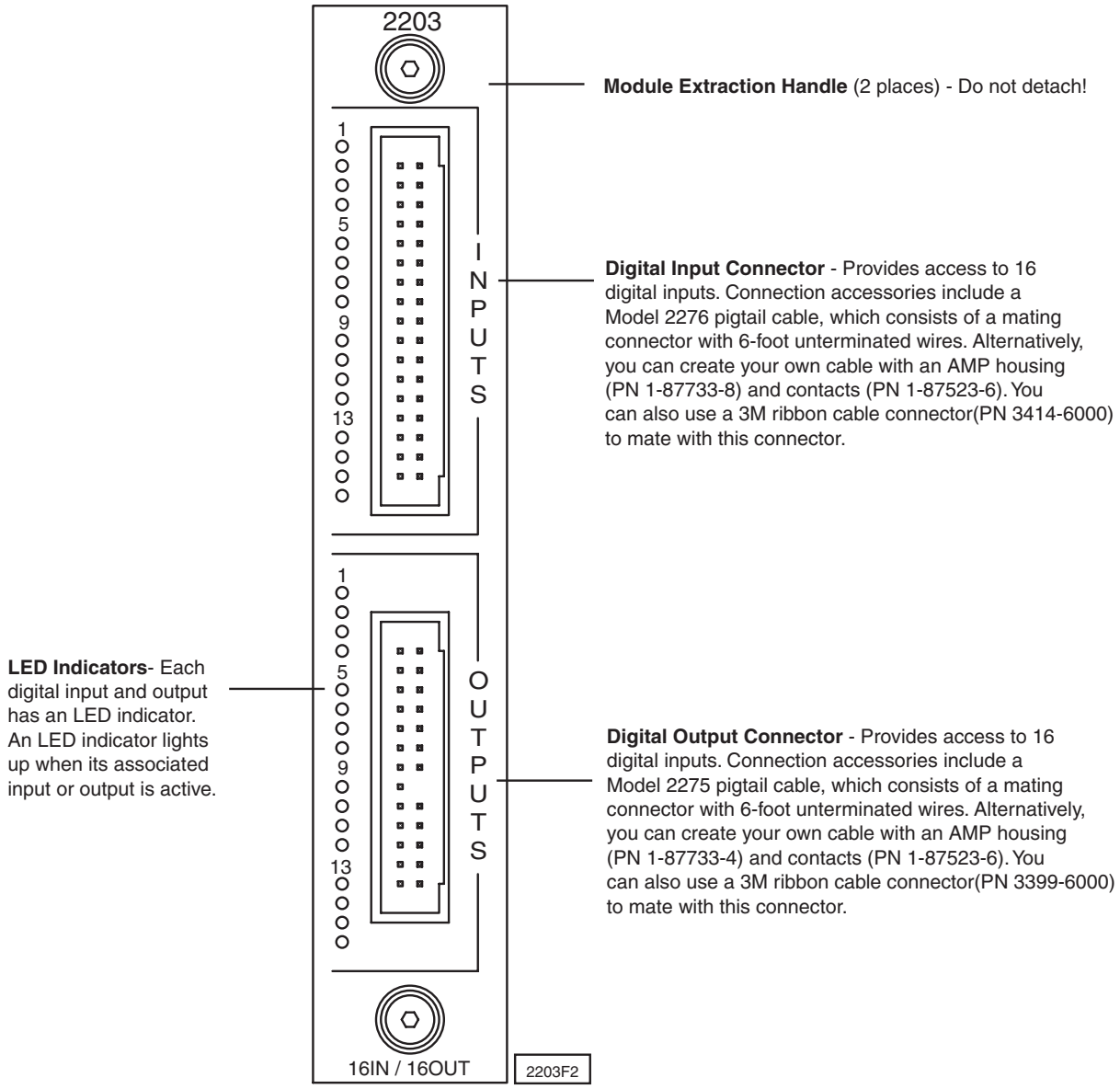

Control Technology Corporation proprietary. Reproduction or distribution forbidden.

2203 Connection Diagrams

Table 1. Connection Diagram - Digital Input Connector

Digital Input Connector	Pin #	Signal	Pin #	Signal
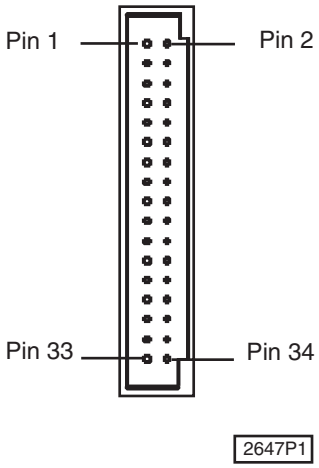	1	Input 1	2	Return
	3	Input 2	4	Return
	5	Input 3	6	Return
	7	Input 4	8	Return
	9	Input 5	10	Return
	11	Input 6	12	Return
	13	Input 7	14	Return
	15	Input 8	16	Return
	17	Input 9	18	Return
	19	Input 10	20	Return
	21	Input 11	22	Return
	23	Input 12	24	Return
	25	Input 13	26	Return
	27	Input 14	28	Return
	29	Input 15	30	Return
	31	Input 16	32	Return
	33	+24 VDC	34	Return

Table 2. Connection Diagram - Digital Output Connector

Digital Output Connector	Pin #	Signal	Pin #	Signal
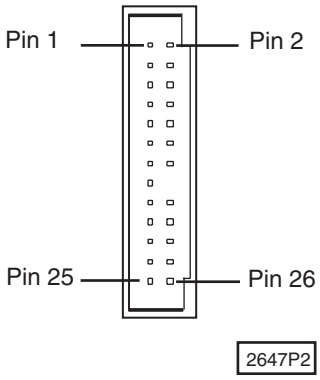	1	Output 1	2	Output 14
	3	Output 2	4	Output 15
	5	Output 3	6	Output 16
	7	Output 4	8	Return
	9	Output 5	10	Return
	11	Output 6	12	Return
	13	Output 7	14	Return
	15	Output 8	16	No pin
	17	Output 9	18	+24 VDC
	19	Output 10	20	+24 VDC
	21	Output 11	22	+24 VDC
	23	Output 12	24	+24 VDC
	25	Output 13	26	NC

Control Technology Corporation proprietary. Reproduction or distribution forbidden.

Specifications

Table 3. Digital I/O Specifications

Description	Min.	Typical	Max.	Units
Absolute Maximum Ratings				
Ambient Temperature				
Operating	0		+50	°C
Storage	-20		+80	°C
Applied input voltage [1]	0		27.0	VDC
Applied output voltage [2]	0		24.0	VDC
Output current				
Single output			500	mA DC
Total limit			5	A
Operating Characteristics				
Output on voltage (I_o = 500 mA)		0.8	1.8	VDC
Output off leakage (applied voltage = 24V) [3]			200	µA
Input off voltage (I_i = 0 mA)		24.0	26.4	VDC
Input on current (V_i = 0 V)		-2.10	-2.85	mA
Input on current threshold (V_i = 8 V typical)		-1.0	-1.85	mA
Input off current (typical leakage current allowable)			-250	µA
Power Requirements (from controller) [4]				
Logic supply (5 VDC)	135		200	mA
Auxiliary supply (24 VDC)	95		110	mA

1. Under normal operation, no external input voltage is applied. Inputs should be externally switched to the input common.
2. An on-board protection diode returns to +24 V from each output.
3. In the off state, unconnected outputs are internally pulled to +5 V through a diode and an LED indicator.
4. Power requirements are worst-case; all inputs and outputs are activated.
5. Specifications are at 25°C unless otherwise specified.

Control Technology Corporation proprietary. Reproduction or distribution forbidden.

Table 4. Hardware / Firmware Revision Levels

Model Numbers	Hardware Revision Level	Firmware Revision Level [1] [2]
2203	C	N/A
2200 Series	0	1.0
2600 Series	C	1.0
2700 Series	C	2.10

1. You can confirm firmware revision levels by doing a register read in Quickstep's monitor program. Use register 13003 to confirm the firmware revision in a 2600/2700 series controller.
2. Firmware revision levels are not equivalent to standard decimal numbers. For example, firmware revision level 2.10 translates to:

   Major Revision Level 2
   Major Revision Level 10

   If this value changes to 2.20, it translates to
   :
   Major Revision Level 2
   Major Revision Level 20 (not revision level 2)

Control Technology Corporation proprietary. Reproduction or distribution forbidden.

Board Handling Precautions

The module's printed circuit board contains electrostatic discharge sensitive (ESD) devices. Improper board handling could result in damage to the board. The following precautions are recommended when handling the board or before inserting it into the controller:

- Make sure you are grounded electrically by using a wrist strap connected to an electrically grounded workstation or by physically touching the controller case or something electrically connected to the controller case.
- Avoid touching the leads or contacts of the circuit board and handle the board by its edges only.
- Transport circuit boards in protective, anti-static bags, bins, or totes. Do not insert boards into materials such as plastic, polystyrene foam, clear plastic bags, bubble wrap, or plastic trays.

Control Technology Corporation proprietary. Reproduction or distribution forbidden.

Installing the 2203 Module

The module fits into one of the slots of your automation controller (Figure 1). You can insert any combination of modules into the controller (subject to system limits) and can install them in any order. This is possible because the controller's CPU dynamically assigns such items as motor numbers, input numbers, and output numbers each time power is re-applied to the controller. These numbers are assigned from left-to-right across the controller. To install a module into the automation controller:

Note

Retain all hardware removed during this procedure.

1. Remove all AC and DC power, including any external supplies connected to the controller.
2. Locate an unused slot and remove two retaining screws from the top and bottom of its cover plate.
3. Slide the module into the slot and make sure that the circuit board slides into the nylon guides at the top and bottom of the controller case. Make sure that the card is oriented properly so that its labels are right-side-up.
4. Press the module firmly into the controller. Make sure that the module's faceplate is flush with the adjacent sheet metal surface.
5. Re-install two retaining screws in the top and bottom of the new module.

Figure 1. 2700 Series Controller with the 2203 module installed in the right-hand slot

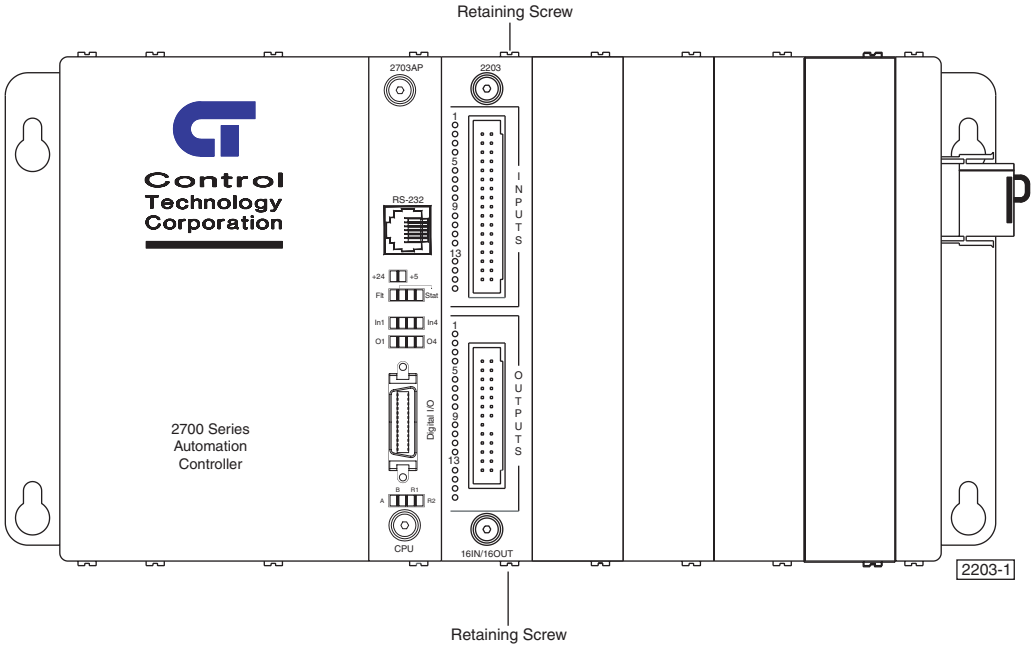

Control Technology Corporation proprietary. Reproduction or distribution forbidden.

Connecting a Digital Input

The Model 2203 has 16 digital inputs that you can activate with a switch closure (Figure 2) to **Return** (the common for the controller's 24 V supply). Each input is opto-isolated from the controller's logic circuitry and is internally self-powered by the 24 V supply through a current-limiting resistor.

Figure 2. Digital Input Activation

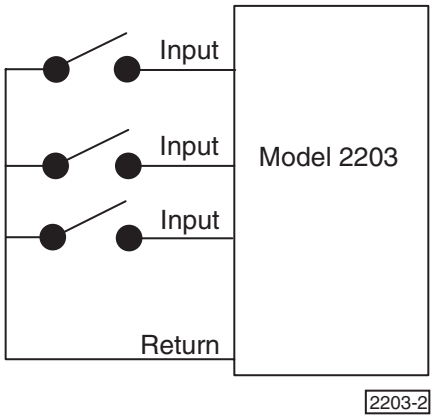

The controller senses when an input is pulled down to **Return** by a switch closure. A MONITOR instruction or any other programmed instruction referring to a general purpose input can use this information.

Using Solid-State Sensors

You can connect many types of electronic sensors such as three-wire Hall-effect sensors, proximity sensors, and phototransistors to the inputs without any additional circuitry. These devices must have sinking type open-collector outputs (NPN) and must be able to withstand at least +24 V on their output terminals when they are in the OFF state. The sensor must also be able to sink the required input current (i.e.- 2.1 mA) when ON.

Note

Do not use two-wire, solid-state sensors.

Control Technology Corporation proprietary. Reproduction or distribution forbidden.

Electronic sensors have internal circuitry that generally requires an external power source. However, if the desired sensor has voltage requirements that equal the controller's built-in auxiliary supply (24 V), you can use the controller directly and do not need an external supply. Figure 3 shows how to connect a solid-state sensor to a digital input.

Figure 3. Connecting a Solid-State Sensor to a Digital Input

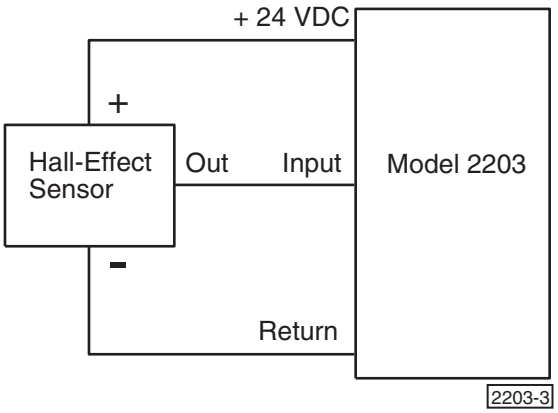

Control Technology Corporation proprietary. Reproduction or distribution forbidden.

Connecting Digital Outputs

This section describes the digital outputs and how to connect devices to these inputs.

Using Open-Collector Outputs

The Model 2203 has 16 outputs for driving external loads such as solenoid valves, indicators, solid-state relays and other low-power DC loads. These outputs are configured as open-collector transistors that can switch loads up to 0.5 Amps DC. Open-collector outputs are transistors whose collector terminal is left unconnected to allow greater flexibility in its use.

An open-collector output, which is shown in Figure 4, performs roughly the same function as a switch contact with one side of the switch connected to ground. When the output is turned OFF, no current can flow through the transistor. This is equivalent to an open switch contact because the device being controlled is turned OFF.

Note

Control Tech recommends that you place a suppression diode across inductive loads. Use a 1N4004 diode or its equivalent. Locate the diode as close to the load as possible. Refer to Figure 4 for more information.

Figure 4. Open-Collector Output

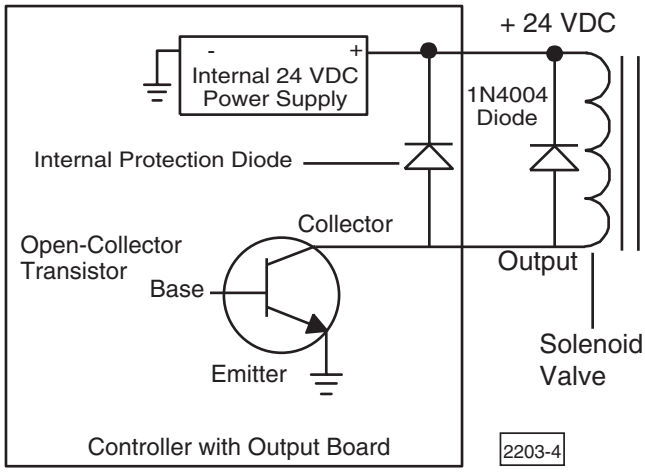

When the output is turned on, current flows through the transistor, which is equivalent to a closed switch contact. The controlled device turns on in response to the flow of current.

Connect a device to an open-collector output by connecting one of the device's terminals to the output and the other terminal to the positive side of the power supply. If the device is polarized, connect its negative [-] terminal to the output.

Do not exceed the rated current of the power supply in use. If this supply is the controller's internal power supply, you should check the controller's specifications for the maximum current rating of its 24 V power system. This rating must include any current required by the modules installed in the controller. However, when you calculate your system's current

Control Technology Corporation proprietary. Reproduction or distribution forbidden.

requirements, you only need to consider the maximum number of output devices that will be turned on simultaneously. Refer to Figure 5 if your system's current requirements exceed the capacity of the controller's internal supply or you need a voltage other than 24 V.

Figure 5. External Power Supply Connection Diagram

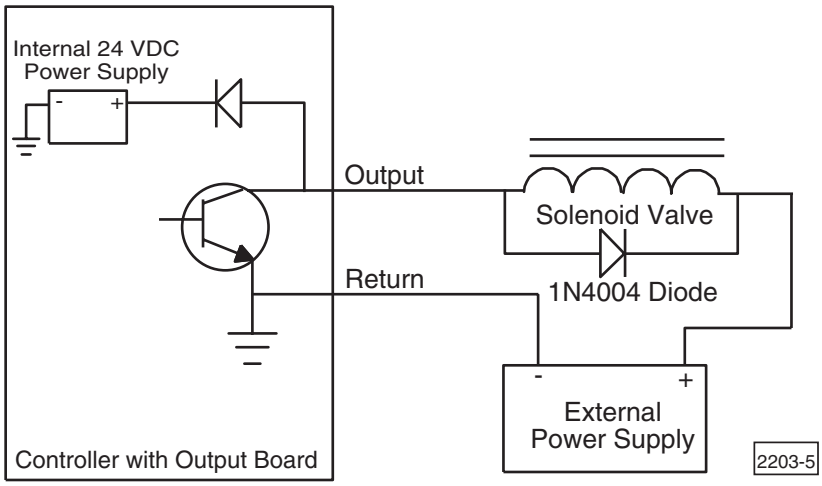

Note

Do not use an external power supply with an output voltage that exceeds the voltage rating of the 2203's outputs.

Caution

Each output has a protection diode with its cathode connected to the +24 VDC power supply through the input connector. This diode prevents damage to the output when it is connected to an inductive load. If you use an external supply as shown in Figure 5, a current path exists between the two supplies through the devices being controlled. Under normal circumstances, this practice is acceptable. However, some power supplies offer low impedance with respect to the power supply return when you turn them OFF. For example, in Figure 5, the main supply is turned OFF and the external supply is ON. Current from the external supply can energize the device connected to the output and turn it ON.To prevent this situation, make sure that both supplies are turned ON and OFF at the same time.

Caution

Do not connect the positive [+] terminals of the power supplies together! Damage to one of the supplies may result. Figure 5 shows the connection between the external supply's negative terminal and the output connector's return terminal. This provides a complete path for the current traveling through the device being controlled.

Control Technology Corporation proprietary. Reproduction or distribution forbidden.

Connecting Multiple Devices

It is possible to supply power to multiple devices from the same power source. One lead of each device is attached to an independent output and the other lead is connected to the positive [+] terminal of the power source (internal or external). Figure 6 shows five solenoid valves that are controlled by Outputs 1-5. Power is supplied to each output from the controller's internal power supply.

Figure 6. Multiple Device Connection Diagram

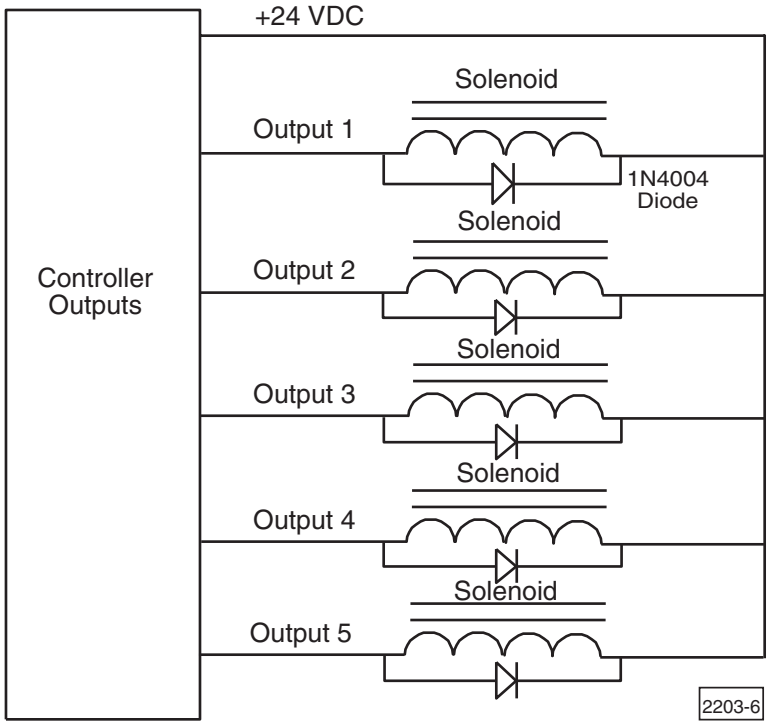

Connecting to a Second External Supply

Multiple devices can also derive their power source from a secondary external power supply. Some devices use this external supply while others use the controller's internal power supply. If you use this option, connect each device to the positive [+] terminal of the appropriate power supply. Figure 7 illustrates this setup.

Note

If you decide to use an external power supply, do not tie the positive [+] terminals of the two supplies together by direct means or indirect means.

Control Technology Corporation proprietary. Reproduction or distribution forbidden.

Figure 7. External Power Supply with Multiple Devices Connection Diagram

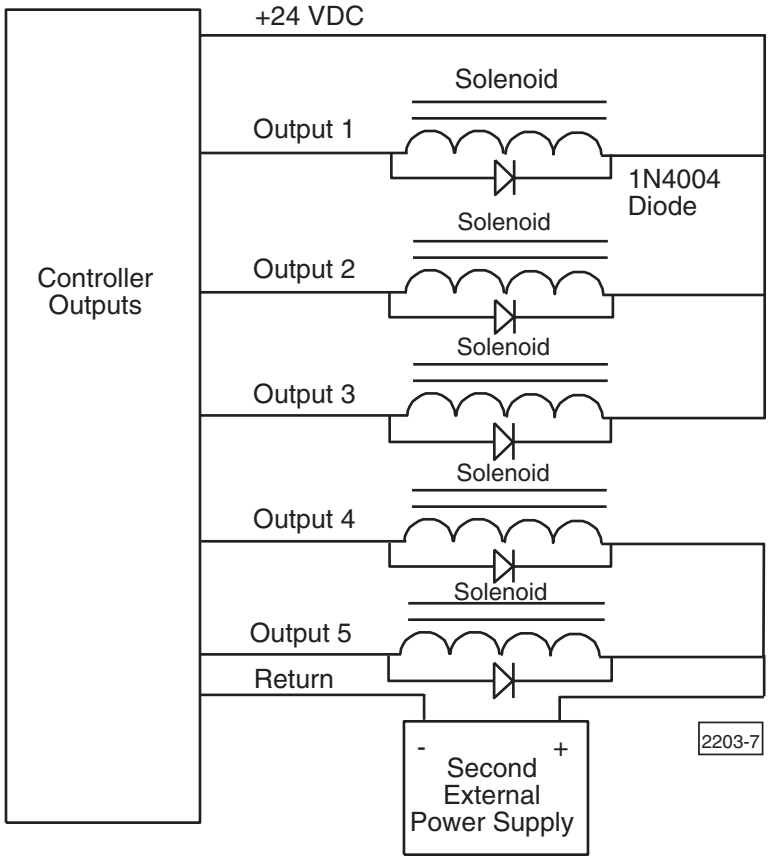

Control Technology Corporation proprietary. Reproduction or distribution forbidden.

This page is intentionally left blank.

Control Technology Corporation proprietary. Reproduction or distribution forbidden.

Artisan Technology Group is an independent supplier of quality pre-owned equipment

Gold-standard solutions

Extend the life of your critical industrial, commercial, and military systems with our superior service and support.

We buy equipment

Planning to upgrade your current equipment? Have surplus equipment taking up shelf space? We'll give it a new home.

Learn more!

Visit us at **artisantg.com** for more info on price quotes, drivers, technical specifications, manuals, and documentation.

Artisan Scientific Corporation dba Artisan Technology Group is not an affiliate, representative, or authorized distributor for any manufacturer listed herein.

We're here to make your life easier. How can we help you today?

(217) 352-9330 | sales@artisantg.com | artisantg.com

ARTISAN® TECHNOLOGY GROUP