C&H Technologies M207

Precision Oscillator

In Stock

Used and in Excellent Condition

Open Web Page

https://www.artisantg.com/87410-1

ARTISAN TECHNOLOGY GROUP

Your **definitive** source for quality pre-owned equipment.

Artisan Technology Group

(217) 352-9330 | sales@artisantg.com | artisantg.com

All trademarks, brandnames, and brands appearing herein are the property of their respective owners.

- Critical and expedited services
- In stock / Ready-to-ship
- We buy your excess, underutilized, and idle equipment
- Full-service, independent repair center

Artisan Scientific Corporation dba Artisan Technology Group is not an affiliate, representative, or authorized distributor for any manufacturer listed herein.

U S E R ' S M A N U A L

PRECISION OSCILLATOR M-MODULE

MODEL M207

Document Part No: 11028614

Artisan Technology Group - Quality Instrumentation ... Guaranteed | (888) 88-SOURCE | www.artisantg.com

COPYRIGHT

C&H Technologies, Inc. (C&H) provides this manual "as is" without warranty of any kind, either expressed or implied, including but not limited to the implied warranties of merchantability and fitness for a particular purpose. C&H may make improvements and/or changes in the product(s) and/or program(s) described in this manual at any time and without notice.

This publication could contain technical inaccuracies or typographical errors. Changes are periodically made to the information herein; these changes will be incorporated in new editions of this publication.

Copyright © 2001 by C&H Technologies, Inc.

The information and/or drawings set forth in this document and all rights in and to inventions disclosed herein which might be granted thereon disclosing or employing the materials, methods, techniques or apparatus described herein, are the exclusive property of C&H Technologies, Inc.

A Reader's Comment Form is provided at the back of this publication. If this form has been removed address comments to:

C&H Technologies, Inc.
Technical Publications
445 Round Rock West Drive
Round Rock, Texas 78681

C&H may use or distribute any of the information you supply in any way that it believes appropriate without incurring any obligations whatever.

Artisan Technology Group - Quality Instrumentation ... Guaranteed | (888) 88-SOURCE | www.artisantg.com

MODULE WARRANTY

C&H Technologies, Inc. warrants its modules to be free from defects in material and workmanship for three years from date of shipment. C&H will repair or replace the defective product without charge within the warranty period, provided the defective item is shipped, freight prepaid, to C&H Technologies, 445 Round Rock West Drive, Round Rock, Texas 78681. C&H will pay return freight charges to any point in the continental United States or Canada.

Obligations under this warranty shall be limited to repair or replacement, at C&H's discretion, of any product or part thereof which has been returned by the original purchaser with transportation prepaid and, upon examination by C&H, found to be defective. C&H assumes no responsibility for loss or damage to equipment being returned for repair or replacement under the terms of this warranty. Equipment which, upon examination by C&H, requires repair or replacement of parts thereof as a result of improper installation, misuse, unauthorized alterations or repairs, or user negligence, will have such repairs or replacement of parts made at then current rates.

This warranty does not cover damage caused by misuse, neglect, accident, or improper application or installation. C&H shall not be liable for consequential damages of any kind arising out of the purchase, installation, use or misuse of the product. C&H makes no representation or warranty of any kind, either expressed or implied, with respect to equipment operation or procedures. Any action that the user may take in reliance upon the operation or accuracy of this equipment shall be taken solely at the user's own responsibility and risk.

Please notify the C&H sales department to obtain a Return Authorization Number (RAN) prior to return of a product under the terms of this warranty. Notification is to include the Model and Serial numbers of the product along with full details of the problem. Modules returned should clearly show the RAN on the outside of the package.

Artisan Technology Group - Quality Instrumentation ... Guaranteed | (888) 88-SOURCE | www.artisantg.com

AMENDMENT NOTICE

C&H Technologies, Inc. makes every attempt to provide up-to-date manuals with the associated equipment. Occasionally, changes are made to the equipment wherein it is necessary to provide amendments to the manual. If any amendments are provided for this manual they are printed on colored paper and will be provided with the module and manual. Manual updates may also be found on out web site at www.chtech.com.

NOTE

The contents of any amendment may affect operation, maintenance, or calibration of the equipment.

Artisan Technology Group - Quality Instrumentation ... Guaranteed | (888) 88-SOURCE | www.artisantg.com

INTRODUCTION

This manual describes the operation and use of the C&H Model M207 M-Module (Part Number 11028610). This mezzanine module is designed to interface within any M/MA-Module carrier adhering to the ANSI/VITA 12-1996 M-Module specification. These carriers are available in many formats such as VME, VXI, PXI, cPCI, and the PC.

Contained within this manual are the physical and electrical specifications, installation and startup procedures, functional description, and configuration and programming guidelines to adequately use the product.

This manual is based on a low level register access, and is written in such a manner to provide understanding to the user based on this type of access. A software driver using high level function calls may be available, please contact C&H for information.

The part numbers covered by this manual are:

Part Number	Description
11028610-0001	M207 Precision Oscillator M-Module

Artisan Technology Group - Quality Instrumentation ... Guaranteed | (888) 88-SOURCE | www.artisantg.com

Artisan Technology Group - Quality Instrumentation ... Guaranteed | (888) 88-SOURCE | www.artisantg.com

TABLE OF CONTENTS

1. GENERAL DESCRIPTION....1
1.1. PURPOSE OF EQUIPMENT....1
1.2. SPECIFICATIONS OF EQUIPMENT....1
1.2.1. Electrical....2
1.2.2. Mechanical....2
1.2.3. Environmental....2
1.2.4. Bus Compliance....2
1.2.5. Applicable Documents....2
2. INSTALLATION....3
2.1. UNPACKING AND INSPECTION....3
2.2. HANDLING PRECAUTIONS....3
2.3. INSTALLATION OF M-MODULES....3
2.4. PREPARATION FOR RESHIPMENT....4
3. FUNCTIONAL DESCRIPTION....5
3.1. GENERAL....5
3.1.1. Oscillator....5
3.1.2. Divide-By-N....5
3.1.3. Multiplexer....5
3.1.4. Clock Buffer....5
3.2. HARDWARE CONFIGURATION....6
3.3. CONNECTORS....7
3.3.1. M/MA Interface Connector....7
3.3.2. Front Panel I/O Connector....7
4. OPERATIONAL DESCRIPTION....9
4.1. OUTPUT CONTROL....9
4.2. CALIBRATION....9
APPENDIX A – CONNECTORS....A-1

LIST OF FIGURES

Figure 1. M-MODULE Installation....3
Figure 2. Functional Block Diagram....5
Figure 3. Hardware Configurable Controls....6

Figure A-1. M/MA Interface Connector Configuration....A-1

Artisan Technology Group - Quality Instrumentation ... Guaranteed | (888) 88-SOURCE | www.artisantg.com

Artisan Technology Group - Quality Instrumentation ... Guaranteed | (888) 88-SOURCE | www.artisantg.com

1. GENERAL DESCRIPTION

The M207 is a precision oscillator source that provides a highly accurate and stable clock reference that can be used as a frequency or time reference. The primary 10MHz clock can be output as is or divided by any value from 2 to 16383. The resulting output can be directed to a front SMA connector and/or to either or both of the M-Module triggers. The output can be a 100ns pulse or a square wave.

The module is physically implemented on a single wide M-Module adhering to the ANSI/VITA 12-1996 specification for M-Modules. The M207 may be installed in any carrier board supporting the M-Module specification.

1.1. PURPOSE OF EQUIPMENT

This M-Module is primary used as a frequency or time reference. The ability to output a clock signal to the M-module triggers allows the module to provide precise timing capabilities to M-module carriers and their integrated M-modules.

1.2. SPECIFICATIONS OF EQUIPMENT

MAXIMUM RATINGS

Parameter	Condition	Rating	Units
Operating Temperature		+0 to +50	°C
Non-Operating Temperature		-40 to +70	°C
Humidity	non-condensing	5 to 95	%
Power Consumption (+5V from M-Module interface)	During oscillator warm-up After warm-up	500 250	mA mA
DC Output Source/Sink Current	front panel connector[1]	±50	mA

AC CHARACTERISTICS

Parameter	Conditions	Limit Min	Typ.	Max	Units
Oscillator					
Nominal Frequency			10		MHz
Stability (Freq. vs. Temp)	0 - 50° C	-0.01		0.01	ppm
Aging (Freq. vs. Time)	1st year 10 years	-0.1 -1.0		0.1 1.0	ppm ppm
Calibration (Freq. vs. Control)		-1.0		1.0	ppm
Warm Up (Freq. Ref. to 1 hr. Measurement)	5 minutes 30 minutes	-100 -10		100 10	ppb ppb
Pulse Output Characteristics (Front Panel)					
Minimum High Level Output Voltage	I_{OH} = -24mA	3.76	3.86		V
Minimum Low Level Output Voltage	I_{OL} = 24mA		0.36	0.44	V
Rise/Fall Time	from 0.8V to 2.0V / 2.0V to 0.8V			1.5	ns

Notes:
1. M-Module trigger outputs adhere to the M-Module specification.

Artisan Technology Group - Quality Instrumentation ... Guaranteed | (888) 88-SOURCE | www.artisantg.com

1.2.1. Electrical

The M207 requires only the +5V power from the M-Module carrier.

1.2.2. Mechanical

The mechanical dimensions of the module are in conformance with ANSI/VITA 12-1996 for single-wide M-Module modules. The nominal dimensions are 5.687" (144.5 mm) long × 2.082"(52.9 mm) wide.

1.2.3. Environmental

The environmental specifications of the module are:

Operating Temperature:	0°C to +50°C
Storage Temperature:	-40°C to +70°C
Humidity:	<95% without condensation

Carrier modules may differ in environmental specification. Refer to the carrier's documentation for information.

1.2.4. Bus Compliance

The module complies with the ANSI/VITA 12-1996 Specification for single-wide M-Modules and the MA-Module trigger signal extension. The module does not use any of the control interface provided by the M-Module format. All control of the module is provided through physical switches.

1.2.5. Applicable Documents

ANSI/VITA 12-1996	Standard for The Mezzanine Concept M-Module Specification, Approved May 20, 1997, American National Standards Institute and VMEbus International Trade Association, 7825 E. Gelding Dr. Suite 104, Scottsdale, AZ 85260-3415, http://www.vita.com

Artisan Technology Group - Quality Instrumentation ... Guaranteed | (888) 88-SOURCE | www.artisantg.com

2. INSTALLATION

2.1. UNPACKING AND INSPECTION

In most cases the M207 is individually sealed and packaged for shipment. Verify that there has been no damage to the shipping container. If damage exists then the container should be retained, as it will provide evidence of carrier caused problems. Such problems should be reported to the shipping courier immediately, as well as to C&H. If there is no damage to the shipping container, carefully remove the module from its box and anti static bag and inspect for any signs of physical damage. If damage exists, report immediately to C&H.

2.2. HANDLING PRECAUTIONS

The M207 contains components that are sensitive to electrostatic discharge. When handling the module for any reason, do so at a static-controlled workstation, whenever possible. At a minimum, avoid work areas that are potential static sources, such as carpeted areas. Avoid unnecessary contact with the components on the module.

2.3. INSTALLATION OF M-MODULES

CAUTION:	Read the entire User's Manual before proceeding with the installation and application of power.

All M-Modules must be installed into the carrier before the carrier is installed into the host system. M-Modules are installed by firmly pressing the connector on the M-Module together with the connector on the carrier. Secure the M-Module with mounting hardware provided as shown in Figure 1.

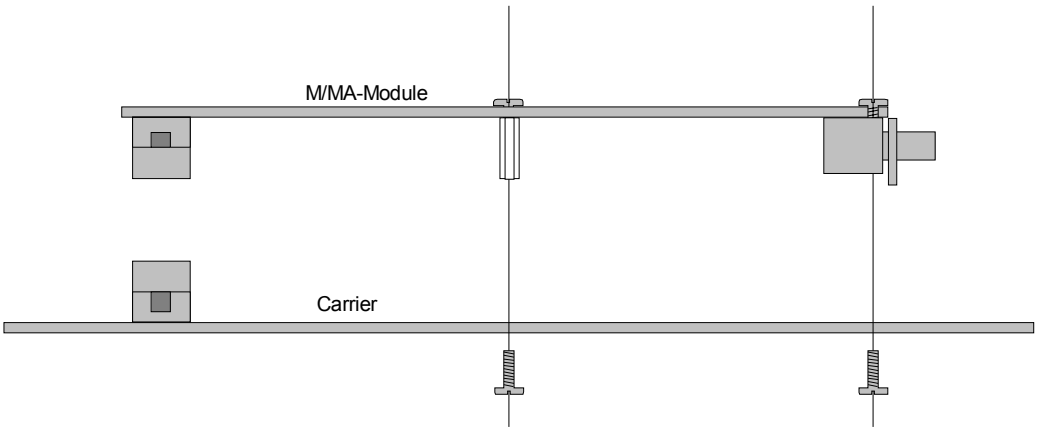

Figure 1. M-MODULE Installation

Artisan Technology Group - Quality Instrumentation ... Guaranteed | (888) 88-SOURCE | www.artisantg.com

2.4. PREPARATION FOR RESHIPMENT

If the module is to be shipped separately it should be enclosed in a suitable water and vapor proof anti static bag. Heat seal or tape the bag to insure a moisture-proof closure. When sealing the bag, keep trapped air volume to a minimum.

The shipping container should be a rigid box of sufficient size and strength to protect the equipment from damage. If the module was received separately from a C&H system, then the original module-shipping container and packing material may be re-used if it is still in good condition.

Artisan Technology Group - Quality Instrumentation ... Guaranteed | (888) 88-SOURCE | www.artisantg.com

3. FUNCTIONAL DESCRIPTION

3.1. GENERAL

The M207 use a highly accurate and stable ovenized oscillator as the primary clock. The output of the oscillator is distributed to the output connectors and to the divide logic.

A simplified block diagram of the module is shown in Figure 2.

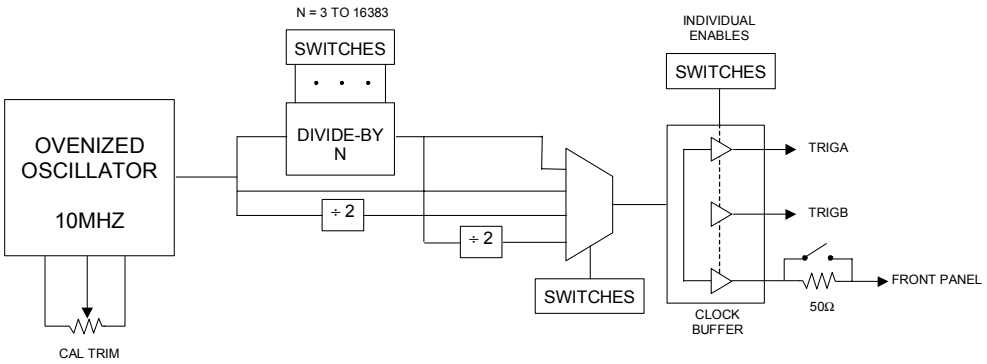

Figure 2. Functional Block Diagram

3.1.1. Oscillator

The ovenized oscillator provides the primary clock for the module. A trimming potentiometer allows calibration of the oscillator frequency.

3.1.2. Divide-By-N

The divide-by-N logic divides primary clock by any integer from 3 to 16383. The direct output of the divider provides a 100ns wide pulse. If a square wave output is desired, the divide-by-N output can further divided by 2 to produce a square wave clock.

3.1.3. Multiplexer

The multiplexer allows the desired output clock to be the 10MHz clock directly, the 10MHz clock divided by N, the 10MHz clock divided by 2, or the square wave output clock.

3.1.4. Clock Buffer

The clock buffer distributes the clock signal to the various output connectors. The buffer allows any or all clock outputs to be used.

Artisan Technology Group - Quality Instrumentation ... Guaranteed | (888) 88-SOURCE | www.artisantg.com

3.2. HARDWARE CONFIGURATION

Switch selectable options are shown in Figure 3.

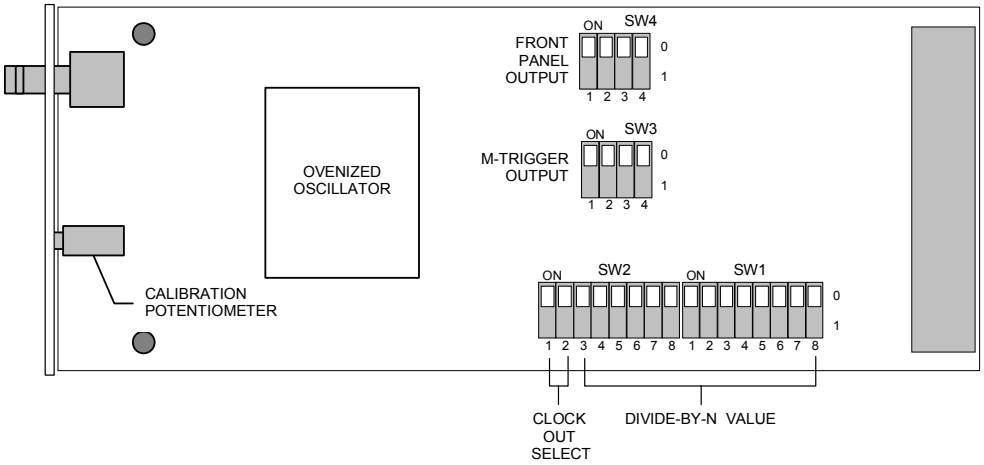

Figure 3. Hardware Configurable Controls

<u>Divide-By-N Value</u> These switches set the divide-by-N value. The 14-bit value is binary encoded according to the position of the SW2 3-8 and SW1 1-8 switches (ON = 0, OFF = 1).

<u>Clock Out Select</u> These switches select the output signal according to the following table.

Clock Out Select	SW2 1-2
Square Wave Output (N ÷ 2)	0 0 (ON-ON)
Divide-By-2	0 1 (ON-OFF)
No divide (10MHz output)	1 0 (OFF-ON)
Divide-By-N	1 1 (OFF-OFF)

<u>M-Trigger A Output Enable</u> This switch enables or disables the M-Trigger A signal (MTRIGA).

MTRIGA Output	SW3-1
Enabled	0 (ON)
Disabled	1 (OFF)

Artisan Technology Group - Quality Instrumentation ... Guaranteed | (888) 88-SOURCE | www.artisantg.com

M-Trigger B Output Enable This switch enables or disables the M-Trigger B signal (MTRIGB).

MTRIGB Output	SW3-2
Enabled	0 (ON)
Disabled	1 (OFF)

Note: Switches 3 and 4 of SW3 are not used, however, they must remain in the OFF position.

Front Panel Output Impedance (Z) This switch select the output input impedance of the front panel output signal.

FP Output Impedance	SW4-1
LOW	0 (ON)
50Ω	1 (OFF)

Front Panel Output Enable This switch enables or disables the front panel output signal.

FP Output Output	SW4-2
Enabled	0 (ON)
Disabled	1 (OFF)

Note: Switches 3 and 4 of SW4 are not used, however, they must remain in the OFF position.

3.3. CONNECTORS

3.3.1. M/MA Interface Connector

The M.MA-Module interface connector contains signal and voltage connections specific to the M-Module interface. (See Appendix A for pin assignments)

3.3.2. Front Panel I/O Connector

The front panel I/O connector is a standard SMA jack connector.

Artisan Technology Group - Quality Instrumentation ... Guaranteed | (888) 88-SOURCE | www.artisantg.com

Artisan Technology Group - Quality Instrumentation ... Guaranteed | (888) 88-SOURCE | www.artisantg.com

4. OPERATIONAL DESCRIPTION

The M207 is controlled entirely through manual switches. There is no software control of the module, however, some M-Module carriers may require software configuration to use the M-Module Trigger outputs.

4.1. OUTPUT CONTROL

Select the desired clock output frequency by first selecting the clock out divide mode (SW2 1-2). Any integer division, up to 16383, of the primary clock (10MHz) can be achieved. For a 10MHz output, select "NO DIVIDE". For 5MHz, select "DIVIDE BY 2". For other frequencies, select either "DIVIDE BY N" or "SQ DIV N/2". If a 100ns pulse is desired, select "DIVIDE BY N" and set the desired divide value using SW2 3-8 and SW1 1-8. If a square wave output is desired, select the "SQ DIV N/2" and set the divide value to one half the desired divide value. The square wave output function performs an additional divide-by-2 to the divide-by-N output.

Enable the desired output connections (Front Panel, Trigger A, and Trigger B) using switches SW3-1, SW3-2 and SW4-2. Any combination, including all outputs enables, is acceptable. If the front panel output is desired, select the output impedance using SW4-1.

Install module into a M-Module carrier as described in Section 2. Some carriers may required software or hardware configuration to enable the use of M-Module trigger outputs. See the carrier documentation for details.

4.2. CALIBRATION

A 25-turn potentiometer, accessible through the front panel, is provided to allow calibration and trimming of the ovenized oscillator due to aging. Before calibration, the module must be allowed the full warm-up time in accordance with the specifications provided in Section 1.2.

Artisan Technology Group - Quality Instrumentation ... Guaranteed | (888) 88-SOURCE | www.artisantg.com

Artisan Technology Group - Quality Instrumentation ... Guaranteed | (888) 88-SOURCE | www.artisantg.com

APPENDIX A – CONNECTORS

Pin	Row A	Row B	Row C
1	*/CS*	**GND**	*/AS*
2	*A01*	**+5V**	*D16*
3	*A02*	*+12V*	*D17*
4	*A03*	*-12V*	*D18*
5	*A04*	**GND**	*D19*
6	*A05*	*/DREQ*	*D20*
7	*A06*	*/DACK*	*D21*
8	*A07*	**GND**	*D22*
9	*D08*	*D00/A08*	**TRIGA**
10	*D09*	*D01/A09*	**TRIGB**
11	*D10*	*D02/A10*	*D23*
12	*D11*	*D03/A11*	*D24*
13	*D12*	*D04/A12*	*D25*
A14	*D13*	*D05/A13*	*D26*
15	*D14*	*D06/A14*	*D27*
16	*D15*	*D07/A15*	*D28*
17	*/DS1*	*/DS0*	*D29*
18	*DTACK*	*/WRITE*	*D30*
19	*/IACK*	*/IRQ*	*D31*
20	**/RESET**	*SYSCLK*	*/DS2*

Note: Signals in a smaller font and italics are not used on this module. They are shown for reference only.

Figure A-1. M/MA Interface Connector Configuration

Artisan Technology Group - Quality Instrumentation ... Guaranteed | (888) 88-SOURCE | www.artisantg.com

Artisan Technology Group - Quality Instrumentation ... Guaranteed | (888) 88-SOURCE | www.artisantg.com

N O T E S:

Artisan Technology Group - Quality Instrumentation ... Guaranteed | (888) 88-SOURCE | www.artisantg.com

READER'S COMMENT FORM

Your comments assist us in improving the usefulness of C&H's publications; they are an important part of the inputs used for revision.

C&H Technologies, Inc. may use and distribute any of the information that you supply in any way that it believes to be appropriate without incurring any obligation whatsoever. You may, of course, continue to use the information, which you supply.

Please refrain from using this form for technical questions or for requests for additional publications; this will only delay the response. Instead, please direct your technical questions to your authorized C&H representative.

COMMENTS: _____

_____

_____

_____

_____

_____

_____

_____

Thank you for helping C&H to deliver the best possible product. Your support is appreciated.

Sincerely,

F. R. Harrison
President and CEO

Artisan Technology Group - Quality Instrumentation ... Guaranteed | (888) 88-SOURCE | www.artisantg.com

INSTRUCTIONS

In its continuing effort to improve documentation, C&H Technologies, Inc. provides this form for use in submitting any comments or suggestions that the user may have. This form may be detached, folded along the lines indicated, taped along the loose edge (DO NOT STAPLE), and mailed. Please try to be as specific as possible and reference applicable sections of the manual or drawings if appropriate. Also, indicate if you would like an acknowledgment mailed to you stating whether or not your comments were being incorporated.

> NOTE: This form may not be used to request copies of documents or to request waivers, deviations, or clarification of specification requirements on current contracts. Comments submitted on this form do not constitute or imply authorization to waive any portion of the referenced document(s) or to amend contractual requirements.

——————————— (Fold along this line) ———————————

——————————— (Fold along this line) ———————————

Place Stamp Here

C&H Technologies, Inc.
Technical Publications
P. O. Box 14765
Austin, Texas 78761-4765

Artisan Technology Group - Quality Instrumentation ... Guaranteed | (888) 88-SOURCE | www.artisantg.com

Artisan Technology Group is an independent supplier of quality pre-owned equipment

Gold-standard solutions

Extend the life of your critical industrial, commercial, and military systems with our superior service and support.

We buy equipment

Planning to upgrade your current equipment? Have surplus equipment taking up shelf space? We'll give it a new home.

Learn more!

Visit us at **artisantg.com** for more info on price quotes, drivers, technical specifications, manuals, and documentation.

Artisan Scientific Corporation dba Artisan Technology Group is not an affiliate, representative, or authorized distributor for any manufacturer listed herein.

We're here to make your life easier. How can we help you today?

(217) 352-9330 | sales@artisantg.com | artisantg.com

ARTISAN® TECHNOLOGY GROUP