ILX Lightwave LDC-3916374

1 Amp / 9 W Laser Diode Current Source and Temperature Control Module

$1695.00

In Stock

Qty Available: 3

Used and in Excellent Condition

Open Web Page

https://www.artisantg.com/53617-9

ARTISAN TECHNOLOGY GROUP

Your **definitive** source for quality pre-owned equipment.

Artisan Technology Group

(217) 352-9330 | sales@artisantg.com | artisantg.com

All trademarks, brandnames, and brands appearing herein are the property of their respective owners.

- Critical and expedited services
- In stock / Ready-to-ship
- We buy your excess, underutilized, and idle equipment
- Full-service, independent repair center

Artisan Scientific Corporation dba Artisan Technology Group is not an affiliate, representative, or authorized distributor for any manufacturer listed herein.

User's Guide

6-Amp Temperature Control Module
LDC-3926559

ILX Lightwave
Photonic Test & Measurement Instrumentation

ILX Lightwave Corporation · P. O. Box 6310 · Bozeman, MT, U.S.A. 59771 · U.S. & Canada: 1-800-459-9459 · International Inquiries: 406-586-1244 · Fax 406-586-9405
E-mail: support@ilxlightwave.com
www.ilxlightwave.com

700357_05/02

Artisan Technology Group - Quality Instrumentation ... Guaranteed | (888) 88-SOURCE | www.artisantg.com

Artisan Technology Group - Quality Instrumentation ... Guaranteed | (888) 88-SOURCE | www.artisantg.com

TABLE OF CONTENTS

List of Figures v

List of Tables vii

Safety and Warranty Information ix

Safety Information and the Manual ix

General Safety Considerations ix

Safety Symbols x

Safety Marking Symbols x

Warranty xi

Limitations xi
Returning an Instrument xi
Claims for Shipping Damage xi

Comments, Suggestions, and Problems xii

Chapter 1 Introduction and Specifications

Product Overview 2

Initial Inspection 2

Installing the Module into the Mainframe 3

Installing the Module 3

Specifications 4

Chapter 2 Operations

Connecting to the Temperature Controller 7

TEC Grounding Considerations 8

Artisan Technology Group - Quality Instrumentation ... Guaranteed | (888) 88-SOURCE | www.artisantg.com

Front Panel Overview 9

General Front Panel Operation 9
Laser Enable Key Switch 9
Display Section 9
Adjust Section 10

Basic TEC Operation Instructions 11

Guidelines for Operation 14
Control Mode 14
Setting Gain 14
Selecting a Gain Setting 15
Sensor Current 15
Selecting Sensor Current 15
Setting Safety Limits 16

Default Settings 17
Retrieving Default Settings 17

Chapter 3 Remote Operations

Remote Configuration 19

Command Syntax 19
Letters 19
White Space 20
Terminators 20
Command Separators 20
Parameters 20
LDC-3926559 Command Set 22
Syntax Summary 23

IEEE 488.2 Common Commands 23

Command Timing 24
Sequential/Overlapped Commands 24
Query Response Timing 24

Status Reporting 25

Status Registers 25
Operation Complete Definition 25

Output Off Registers 27

Error Messages 28

Testing for Errors in Remote Operation 28

Artisan Technology Group - Quality Instrumentation ... Guaranteed | (888) 88-SOURCE | www.artisantg.com

Chapter 4 Command Reference

GPIB Commands 31

Command Reference 34

Chapter 5 Calibration and Troubleshooting

Calibration 62

Recommended Equipment 62
Temperature Contoller Calibration 62

Local Calibration 63
Thermistor Calibration 63
ITE Current Calibration 64
TE Voltage Calibration 66

Remote Calibration 67
Thermistor Calibration 67
ITE Current Calibration 68
TE Voltage Calibration 69

Troubleshooting 71

Error Codes 72
Front panel Error Indicators 72
Remote Accessible Error Codes 73
Testing for Errors in Remote Operation 73

Index . . . . . Index-i

Artisan Technology Group - Quality Instrumentation ... Guaranteed | (888) 88-SOURCE | www.artisantg.com

Artisan Technology Group - Quality Instrumentation ... Guaranteed | (888) 88-SOURCE | www.artisantg.com

LIST OF FIGURES

Figure 2.1 Rear Panel TEC Connector 7
Figure 2.2 Front Panel 9
Figure 2.3 Display Section 10
Figure 2.4 Adjust Section 10
Figure 2.5 TEC Page 1 11
Figure 2.6 TEC Page 2 12
Figure 2.7 TEC Page 3 12
Figure 2.8 TEC Page 4 13
Figure 2.9 Example Thermistor Resistance vs. Temperature 16
Figure 3.1 LDC-3926559 Command Path Structure 22
Figure 3.2 Status Condition Registers 26
Figure 3.3 Event Status Registers 26
Figure 5.1 Calibration Menu 63
Figure 5.2 Calibration Menu 64
Figure 5.3 Calibration Menu 65
Figure 5.4 Calibration Menu 66
Figure 5.5 TEV Calibration Completed Screen 67

Artisan Technology Group - Quality Instrumentation ... Guaranteed | (888) 88-SOURCE | www.artisantg.com

Artisan Technology Group - Quality Instrumentation ... Guaranteed | (888) 88-SOURCE | www.artisantg.com

LIST OF TABLES

Table 2.1 TEC Controllable Laser Current Sources 13
Table 3.1 Substitute Parameter Names 21
Table 3.2 Invalid Syntax Command Strings 23
Table 3.3 LDC-3926559 TEC Output Off Register Contents 27
Table 3.4 Error Codes 28
Table 4.1 GPIB Command Summary Reference List 31
Table 5.1 Recommended Test Equipment 62
Table 5.2 Temperature Sensor (Thermistor) Calibration 62
Table 5.3 Problem and Action 71
Table 5.4 Front Panel Error Codes 72
Table 5.5 Error Codes 73

Artisan Technology Group - Quality Instrumentation ... Guaranteed | (888) 88-SOURCE | www.artisantg.com

Artisan Technology Group - Quality Instrumentation ... Guaranteed | (888) 88-SOURCE | www.artisantg.com

SAFETY AND WARRANTY INFORMATION

The Safety and Warranty Information section provides details about cautionary symbols used in the manual, safety markings used on the instrument, and information about the Warranty including Customer Service contact information.

Safety Information and the Manual

Throughout this manual, you will see the words *Caution* and *Warning* indicating potentially dangerous or hazardous situations which, if not avoided, could result in death, serious or minor injury, or damage to the product. Specifically:

CAUTION

Caution indicates a potentially hazardous situation which can result in minor or moderate injury or damage to the product or equipment.

WARNING

Warning indicates a potentially dangerous situation which can result in serious injury or death.

WARNING

Visible and/or invisible laser radiation. Avoid direct exposure to the beam.

General Safety Considerations

If any of the following conditions exist, or are even suspected, do not use the instrument until safe operation can be verified by trained service personnel:

- Visible damage
- Severe transport stress
- Prolonged storage under adverse conditions
- Failure to perform intended measurements or functions

If necessary, return the instrument to ILX Lightwave, or authorized local ILX Lightwave distributor, for service or repair to ensure that safety features are maintained (see the contact information on page xii).

All instruments returned to ILX Lightwave are required to have a Return Authorization Number assigned by an official representative of ILX Lightwave Corporation. See Returning an Instrument on page xi for more information.

Artisan Technology Group - Quality Instrumentation ... Guaranteed | (888) 88-SOURCE | www.artisantg.com

SAFETY SYMBOLS

This section describes the safety symbols and classifications.

Technical specifications including electrical ratings and weight are included within the manual. See the Table of Contents to locate the specifications and other product information. The following classifications are standard across all ILX Lightwave products:

- Indoor use only
- Ordinary Protection: This product is NOT protected against the harmful ingress of moisture.
- Class I Equipment (grounded type)
- Mains supply voltage fluctuations are not to exceed ±10% of the nominal supply voltage.
- Pollution Degree 2
- Installation (overvoltage) Category II for transient overvoltages
- Maximum Relative Humidity: <80% RH, non-condensing
- Operating temperature range of 0 °C to 40 °C
- Storage and transportation temperature of –40 °C to 70 °C
- Maximum altitude: 3000 m (9843 ft)
- This equipment is suitable for continuous operation.

Safety Marking Symbols

This section provides a description of the safety marking symbols that appear on the instrument. These symbols provide information about potentially dangerous situations which can result in death, injury, or damage to the instrument and other components.

Caution, refer to manual	Earth ground Terminal	Alternating current	Visible and/or invisible laser radiation
Caution, risk of electric shock	Protective Conductor Terminal	Caution, hot surface	Frame or chassis Terminal
I or (I) On: In position of a bistable push control. The slash (I) only denotes that mains are on.		O or (O) Off: Out position of a bistable push control. The circle (O) only denotes that mains are off.	

Artisan Technology Group - Quality Instrumentation ... Guaranteed | (888) 88-SOURCE | www.artisantg.com

WARRANTY

ILX LIGHTWAVE CORPORATION warrants this instrument to be free from defects in material and workmanship for a period of one year from date of shipment. During the warranty period, ILX will repair or replace the unit, at our option, without charge.

Limitations

This warranty does not apply to fuses, lamps, defects caused by abuse, modifications, or to use of the product for which it was not intended.

This warranty is in lieu of all other warranties, expressed or implied, including any implied warranty of merchantability or fitness for any particular purpose. ILX Lightwave Corporation shall not be liable for any incidental, special, or consequential damages.

If a problem occurs, please contact ILX Lightwave Corporation with the instrument's serial number, and thoroughly describe the nature of the problem.

Returning an Instrument

If an instrument is to be shipped to ILX Lightwave for repair or service, be sure to:

1. Obtain a Return Authorization number (RA) from ILX Customer Service.
2. Attach a tag to the instrument identifying the owner and indicating the required service or repair. Include the instrument serial number from the rear panel of the instrument.
3. Attach the anti-static protective caps that were shipped with the instrument and place the instrument in a protective anti-static bag.
4. Place the instrument in the original packing container with at least 3 inches (7.5 cm) of compressible packaging material. **Shipping damage is not covered by this warranty.**
5. Secure the packing box with fiber reinforced strapping tape or metal bands.
6. Send the instrument, transportation pre-paid, to ILX Lightwave. Clearly write the return authorization number on the outside of the box and on the shipping paperwork. ILX Lightwave recommends you insure the shipment.

If the original shipping container is not available, place your instrument in a container with at least 3 inches (7.5 cm) of compressible packaging material on all sides.

Repairs are made and the instrument returned transportation pre-paid. Repairs are warranted for the remainder of the original warranty or for 90 days, whichever is greater.

Claims for Shipping Damage

When you receive the instrument, inspect it immediately for any damage or shortages on the packing list. If the instrument is damaged, file a claim with the carrier. The factory will supply you with a quotation for estimated costs of repair. You must negotiate and settle with the carrier for the amount of damage.

Artisan Technology Group - Quality Instrumentation ... Guaranteed | (888) 88-SOURCE | www.artisantg.com

Comments, Suggestions, and Problems

To ensure that you get the most out of your ILX Lightwave product, we ask that you direct any product operation or service related questions or comments to ILX Lightwave Customer Support. You may contact us in whatever way is most convenient:

Phone . . . . . (800) 459-9459 or (406) 586-1244

Fax . . . . . (406) 586-9405

On the web at: . . . . . ilx.custhelp.com

Or mail to:

ILX Lightwave Corporation
P. O. Box 6310
Bozeman, Montana, U.S.A 59771
www.ilxlightwave.com

When you contact us, please have the following information:

Model Number: _____

Serial Number: _____

End-user Name: _____

Company: _____

Phone: _____

Fax: _____

Description or sketch of what is connected to the ILX Lightwave instrument:

_____

Description of the problem:

_____

If ILX Lightwave determines that a return to the factory is necessary, you are issued a Return Authorization (RA) number. Please mark this number on the outside of the shipping box.

You or your shipping service are responsible for any shipping damage when returning the instrument to ILX Lightwave; ILX recommends you insure the shipment. If the original shipping container is not available, place your instrument in a container with at least 3 inches (7.5 cm) of compressible packaging material on all sides.

We look forward to serving you even better in the future!

Artisan Technology Group - Quality Instrumentation ... Guaranteed | (888) 88-SOURCE | www.artisantg.com

CHAPTER 1

INTRODUCTION AND SPECIFICATIONS

This chapter is an introduction to the LDC-3926559 6-Amp Temperature Control Module for the LDC-3926 Laser Diode Controller Mainframe. It contains unpacking information, instructions on how to install and apply power, and safety considerations. It also contains some maintenance information and specifications.

WARNING

If any of the following symptoms exist, or are even suspected, remove the LDC-3926559 Module from service. Do not use the module until trained service personnel can verify safe operation.

Visible damage

Severe transport stress

Prolonged storage under adverse conditions

Failure to perform intended measurements or functions

If necessary, return modules to ILX Lightwave for service and repair (see Returning an Instrument on page xi) to ensure that safety features are maintained.

Artisan Technology Group - Quality Instrumentation ... Guaranteed | (888) 88-SOURCE | www.artisantg.com

Product Overview

The LDC-3926559 contains a single six ampere independent temperature controller that drives a thermoelectric cooler (TEC). The temperature controller features a bi-polar current driver that works with most TEC modules to deliver precise temperature control over a wide range of temperatures. The temperature controller operates using only thermistor-type temperature sensors. The LDC-3926559 features a TEC module voltage measurement, selection of thermistor current range, and control loop gain adjustment from 1 to 127.

Initial Inspection

When you receive your LDC-3926559 6-Amp Temperature Control Module, check for shipping damage immediately. Shipping damage is not covered under warranty. Contact ILX Customer Service (see page xii for contact information) if the module appears to have shipping damage.

Verify that the module has an ESD protective hood on the 15-pin D-sub connector. Make sure the module is enclosed in an ESD safe handling bag (when shipped separately from the mainframe). Remember to follow proper ESD safe handling procedures before handling the module.

Artisan Technology Group - Quality Instrumentation ... Guaranteed | (888) 88-SOURCE | www.artisantg.com

Installing the Module into the Mainframe

These instructions are for installing the LDC-3926559 module into the LDC-3926 mainframe.

CAUTION

Static discharge can damage your new Temperature Controller Module. Be certain you use proper grounding procedures before unpacking and installing your module(s) into the LDC-3926 mainframe.

Inspect the module for any visible shipping damage that may have occurred before inserting the module into the mainframe. Pay special attention to the copper shielding material on the right edge of the rear panel of the module.

CAUTION

Be sure that the LDC-3926 mainframe power is off before inserting or removing any module. Inserting or removing a module while the mainframe power is on is known as hot-swapping. Hot swapping may cause calibration and memory damage or loss. Module damage from hot-swapping is NOT covered under warranty.

Installing the Module

1. Unwrap the module from the anti-static bag.
2. Make sure the LDC-3926 mainframe is turned off.
3. Align the top and bottom edges of the module with the plastic guides in the desired slot on the mainframe. Make sure the copper shielding is facing the power entry side of the rear panel.
4. Carefully slide the module, 48-pin connector first, into the mainframe until the connector is seated. Make sure to seat the module. The rear panel of the module is flush with the mainframe when properly inserted.
5. Secure the module to the mainframe with two screws located at the top and bottom of the module rear panel.

CAUTION

The LDC-3926559 module will not fit into the LDC-3900, LDC-3908, or LDC-3916 mainframes.

Artisan Technology Group - Quality Instrumentation ... Guaranteed | (888) 88-SOURCE | www.artisantg.com

Specifications

TEMPERATURE CONTROL[1]	
Temperature Control Range:[2]	–99 °C to 150 °C
Thermistor Setpoint Resolution and Accuracy[3]: –20 °C to 20 °C 20 °C to 50 °C	 Resolution: 0.1 °C, Accuracy: ±0.2 °C Resolution: 0.2 °C, Accuracy: ±0.2 °C
Short Term Stability (1 hr.): [4]	<±0.007 °C
Long Term Stability (24 hrs.): [5]	<±0.01 °C
Output Type:	Bipolar current source
Compliance Voltage:	>8 V DC
Maximum Output Current:	6.0 A
Maximum Output Power:	>48 W
Current Noise and Ripple: [6]	<2 mA rms
Current Limit Range:	0.1 A to 6.1 A
Current Limit Set Accuracy:	±0.06 A
Control Algorithm:	Smart Integrator, Hybrid PI Gain adjustable from 1-127
TEMPERATURE SENSOR	
Types:	Thermistor (2-wire NTC)
Thermistor Sensing Current: [7]	10 µA/100 µA
Useable Thermistor Range:	25 Ω to 450,000 Ω, typical
User Calibration:	Steinhart-Hart, 3 constants
TEC MEASUREMENT (DISPLAY)	
Temperature Range [8] Accuracy:	 –99.9 °C to 199.9 °C ±0.5 °C
Thermistor Resistance 10 µA Setting: Range Accuracy 100 µA Setting: Range Accuracy	 0.01 kΩ to 450.00 kΩ ±0.05 kΩ 0.001 kΩ to 45.000 kΩ ±0.005 kΩ
TE Current: Range Accuracy	 –6.00 A to 6.00 A ±0.04 A
Voltage Range: Resolution:[9] Accuracy: [10]	 –10.75 V to 10.75 V 100 mV (1 mV through GPIB) ±70 mV (± 20 mV through GPIB)

Artisan Technology Group - Quality Instrumentation ... Guaranteed | (888) 88-SOURCE | www.artisantg.com

1. All values relate to a one-hour warm-up period.
2. Software limits of range. Actual range possible depends on the physical load, thermistor type, and TEC module used.
3. Accuracy figures are quoted for a typical 10 kΩ thermistor and 100 µA current setting for –5 °C to 50 °C, and a typical 10 kΩ thermistor and a 10 µA current setting for –20 °C to –5 °C. Accuracy figures are relative to the calibration standard. Both resolution and accuracy are dependent upon the user-defined configuration of the instrument.
4. Over any one-hour period, controlling a 0.5 Ω resistor mounted in an LDM-4412 mount @ 25 °C, with 10 kΩ thermistor. Resistor current is set at 3.0 A.
5. Over any 24-hour period, controlling a 0.5 Ω resistor mounted in an LDM-4412 mount @ 25 °C, with 10 kΩ thermistor. Resistor current is set at 3.0 A.
6. Measured at 2 A output with a bandwidth of 25 MHz.
7. Thermistor current software selectable by front panel or GPIB.
8. Software limits of display range.
9. 1 mV through GPIB.
10. Voltage measurement accuracy while driving calibration load. Accuracy is dependent upon load used. Accuracy of ±20 mV through GPIB.

Artisan Technology Group - Quality Instrumentation ... Guaranteed | (888) 88-SOURCE | www.artisantg.com

Artisan Technology Group - Quality Instrumentation ... Guaranteed | (888) 88-SOURCE | www.artisantg.com

CHAPTER 2

OPERATIONS

This chapter introduces you to the operation of the LDC-3926559 front panel control functions. It shows you how to use the LDC-3926559 to control a load temperature. It also gives instructions for connecting a load to a temperature controller's output.

Connecting to the Temperature Controller

Use the 15-pin connector on the rear panel of the LDC-3926559 module to make connections to thermoelectric cooler (TEC) modules and their associated thermistors. There are connections provided for drive current and temperature sensing. There is also a connection to earth ground (chassis). The pinout diagram for this connector is shown in Figure 2.1.

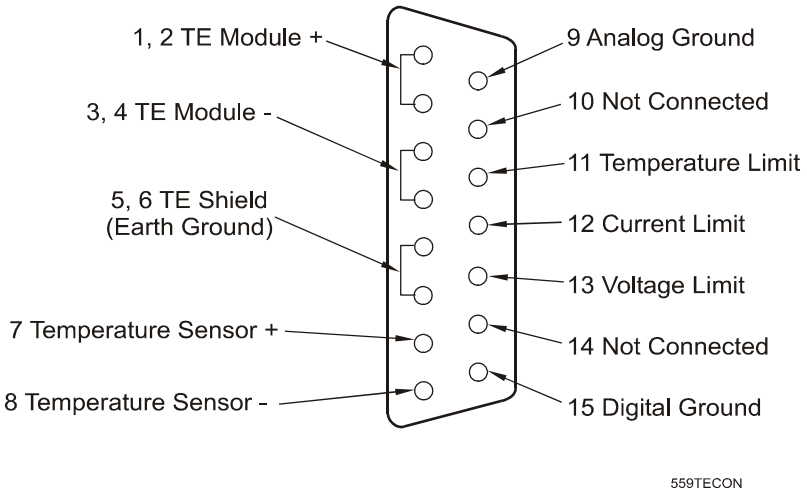

Figure 2.1 Rear Panel TEC Connector

Current flows from pins 1 and 2 (connected internally) to pins 3 and 4 (connected internally) when the controller is trying to cool the TE. This is referred to as positive current. Current flows from pins 3, 4 to pins 1, 2 when the controller is trying to heat the TE. Pin 5 and 6 are connected to the LDC-3926 chassis, which is connected to earth ground. Sensor current (10 µA or 100 µA) flows from pin 7 to pin 8; a voltage develops across a thermistor connected to these pins.

Note: Pins 9-15 are for diagnostic purposes and must not be connected.

Artisan Technology Group - Quality Instrumentation ... Guaranteed | (888) 88-SOURCE | www.artisantg.com

ILX recommends using the CC-501H TEC/Unterminated Low R Interconnect cable to connect the module to the load. The CC-501H cable is designed to have less voltage drop than the CC-501S, CC-505S, and CC-516M cables. See the ILX Lightwave product catalogue or contact ILX Customer Service (see page xii for contact information) for information about the cable.

TEC Grounding Considerations

The TEC Module pins are isolated from chassis ground, allowing either output terminal to be connected to earth ground at the user's option.

CAUTION

Do NOT connect the TEC Module pins (1, 2, 3, and 4) to any grounded pins (5 and 6 TE Shield, 8 Temperature Sensor -, 9 Analog Ground, and 15 Digital Ground) or damage will occur to the module.

Artisan Technology Group - Quality Instrumentation ... Guaranteed | (888) 88-SOURCE | www.artisantg.com

Front Panel Overview

This section describes how to operate the LDC-3926559 6-Amp Temperature Controller from the front panel of the LDC-3926 mainframe. For a more detailed explanation of the front panel keys, see the LDC-3926 User's Guide.

General Front Panel Operation

Figure 2.2 shows the front panel of the LDC-3926 mainframe. The key operating parameters for the LDC-3926559 can be set, adjusted, and displayed through established menus on the front panel. You control the menus on the display by using the keys (pushbuttons) to the right of the display. There are two kinds of keys, the hard keys and soft keys. The hard keys have only one function, while the function of the soft keys varies with each menu on the display.

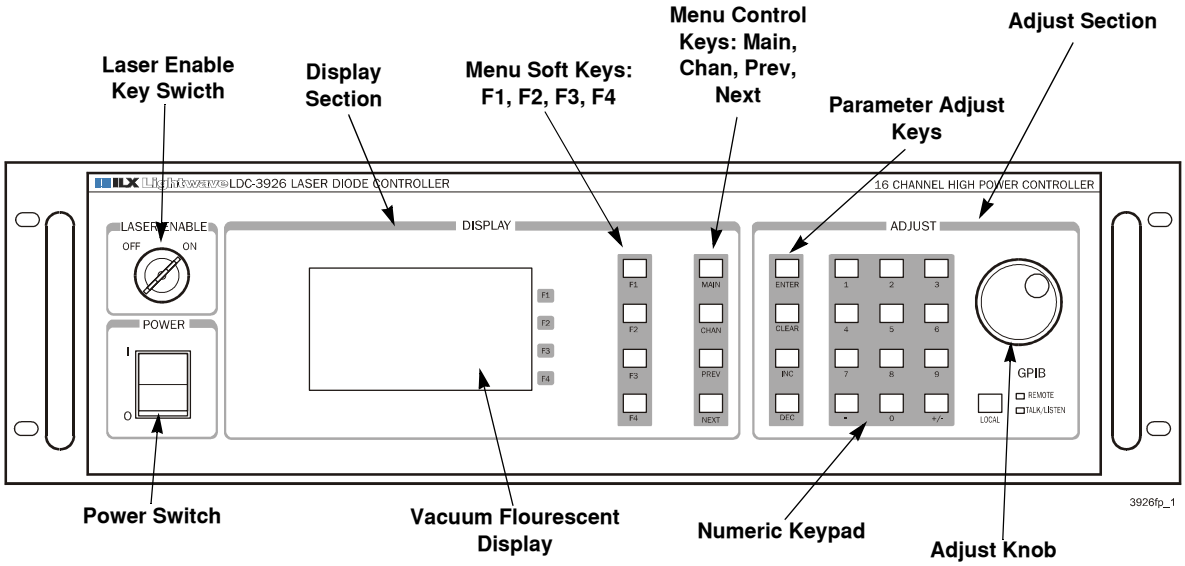

Figure 2.2 Front Panel

Laser Enable Key Switch

To enable laser output, a short must exist between the Interlock pins (pins 1 and 2) of the connector. The short can be a direct short across the pins or a switch to prevent laser operation until the switch is closed. If a short does not exist between these two pins, the laser output is disabled. See more information about interlock pins in the appropriate laser module User's Guide.

Display Section

Two important sections on the front panel are the Display and Adjust sections. The Display section contains the display screen and various keys that allow you to select a menu and parameters within that menu.

The keys labeled F1, F2, F3, and F4 (soft keys) have several functions depending which page is displayed. The boxed text on the right of the screen correspond with these softkeys. The MAIN, CHAN, and PREV/NEXT keys are the hard keys; their function is not dependent on what is on the display. Pressing the MAIN key provides direct access to the Main Instrument screen. The CHAN

Artisan Technology Group - Quality Instrumentation ... Guaranteed | (888) 88-SOURCE | www.artisantg.com

key provides direct access to the Channel screen, where the instrument displays channel information on setpoints for the laser and TEC modules. The PREV and NEXT keys move the cursor around the screen to select operating parameters only.

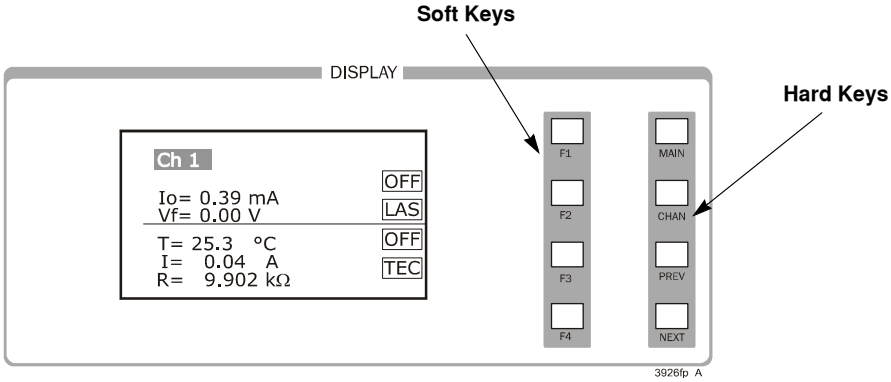

Figure 2.3 Display Section

Adjust Section

The Adjust section of the front panel provides various means of entering or modifying instrument parameters. These include a numeric keypad, a rotary knob (digital encoder), and increment and decrement keys.

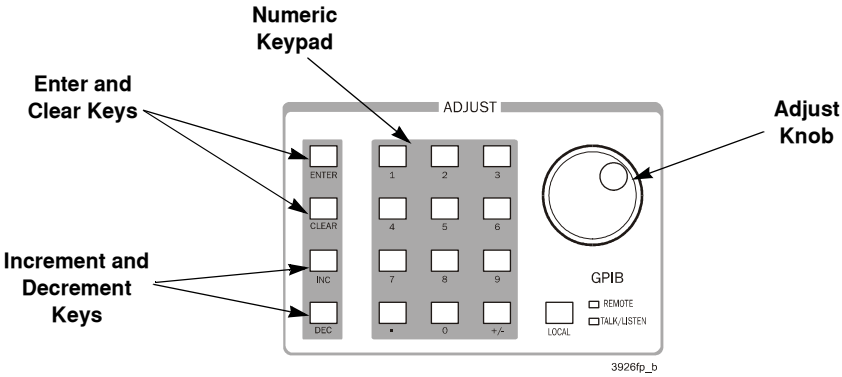

Figure 2.4 Adjust Section

Artisan Technology Group - Quality Instrumentation ... Guaranteed | (888) 88-SOURCE | www.artisantg.com

Basic TEC Operation Instructions

This procedure is for basic setup and operation of the LDC-3926559. See Guidelines for Operation on page 14 for detailed information about specific paramaters and control methods.

1 Press **CHAN** to display the Channel menu. From this menu, you can see the measured parameters.

2 Press the TEC softkey to view TEC p1.

From TEC page 1 menu, set the Temperature setpoint (TSet), the high temperature limit (TLim), and the control mode (Mode). This page also displays measured temperature (T), TE module current (I), and measured TEC module voltage (V). You can also turn the module on or off from this page.

3 Select the temperature setpoint (TSet), the high temperature limit (TLim), and the control mode (Mode).

3a Using the INC/DEC keys, Adjust knob, or keypad, enter the TSet (temperature setpoint). When using the keypad, you must press ENTER within five seconds of selecting the value.

3b Press **NEXT** to highlight the TLim field and enter the desired temperature limit using the INC/DEC keys, Adjust knob, or keypad.

3c Press **NEXT** to highlight the Mode field and select T (temperature), I (TE module current), or R (resistance) using the INC/DEC keys or Adjust knob.

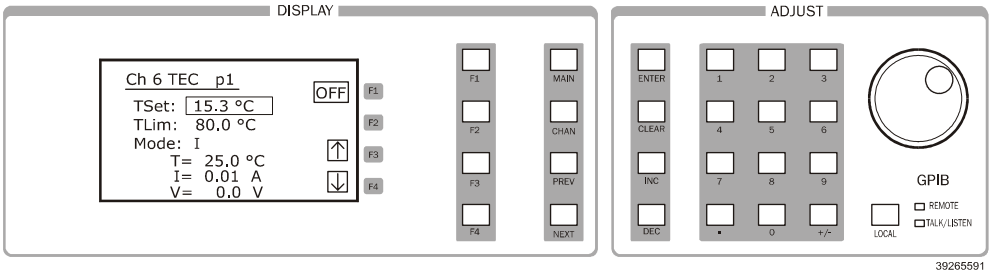

Figure 2.5 TEC Page 1

4 Press **F4** (down arrow) to continue to TEC page 2.

The TEC page 2 allows you to set the constant resistance setpoint (RSet), constant current setpoint (ISet), and current limit (ILim). This page also displays the measured temperature, current, and resistance.

Artisan Technology Group - Quality Instrumentation ... Guaranteed | (888) 88-SOURCE | www.artisantg.com

5 Select the constant resistance setpoint (RSet), constant current setpoint (ISet), and current limit (ILim).

5a Press **PREV** or **NEXT** to highlight RSet, ISet, and ILim.

5b Using the INC/DEC keys, Adjust knob, or keypad, enter the desired RSet, ISet, and ILim values.

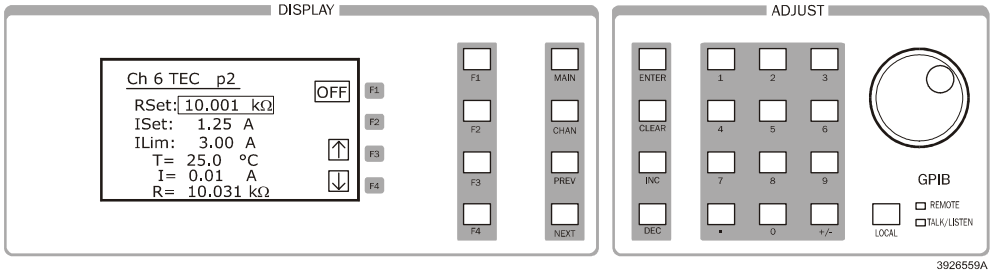

Figure 2.6 TEC Page 2

6 Press **F4** to continue to TEC page 3.

The TEC page 3 allows you to set the Gain, Sensor value, and Steinhart-Hart coeffeicients. This page also displays the measured temperature.

7 Set the Gain, Sensor, and Steinhart-Hart coefficients.

7a Press **PREV** or **NEXT** to highlight Gain, Sensor, and the Steinhart-Hart coefficients.

7b Using the INC/DEC keys, Adjust knob, or keypad, enter the desired gain and sensor values.

7c Press **PREV** of **NEXT** to highlight each of the temperature coefficients and adjust using the INC/DEC keys, Adjust knob, or keypad. Or press **Dflt C** (default constants) to restore the default values for a typical 10 kΩ thermistor.

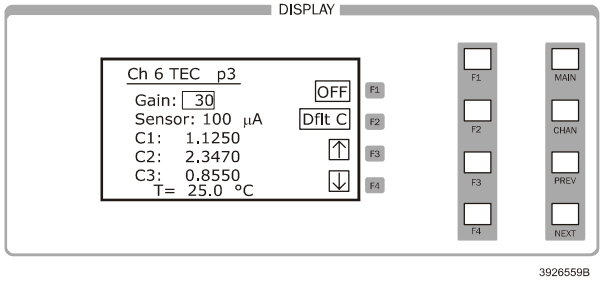

Figure 2.7 TEC Page 3

Artisan Technology Group - Quality Instrumentation ... Guaranteed | (888) 88-SOURCE | www.artisantg.com

8 Press **F4** to continue to TEC page 4.

The TEC page 4 allows you to configure the TEC to turn off a laser current source in another channel if the current source exceeds the temperature limit or if the TEC fails. The laser current source must be a module listed in Table 2.1 on page 13.

9 Select the channel(s) to be turned off upon reaching the temperature limit or upon failure.

10 Press **NEXT** to highlight the Output field.

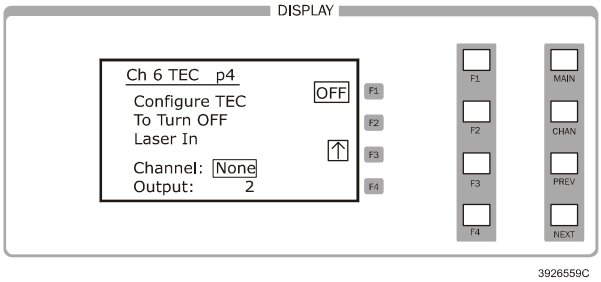

Figure 2.8 TEC Page 4

11 Using the INC/DEC keys, Adjust knob, or keypad, select the current ouput to be turned off for the module selected.

Select None, 1, 2, or Both depending on the current source module used. Select Both to turn off the two outputs in a dual current source. In modules with 2 laser sources, output 1 is the top source and output 2 is the bottom source.

Table 2.1 TEC Controllable Laser Current Sources

Module	Firmware Version	Number of Outputs
3916371	v2.03 or greater	1
3916372	v2.03 or greater	1
3916374	v2.03 or greater	1
3916376	v2.03 or greater	1
3916332	v1.03 or greater	2
3916334	v1.03 or greater	2
3916336	v1.03 or greater	2
3916338	v1.06 or greater	1
3926339	v1.12 or greater	1

Note: To check the firmware version in any module, select the correct channel number in the CHAN menu, then press <**±**>+<**.**>+**ENTER** in sequence.

12 Press **F1** to switch the TEC between OFF and ON.

Artisan Technology Group - Quality Instrumentation ... Guaranteed | (888) 88-SOURCE | www.artisantg.com

Guidelines for Operation

This section presents some guidelines to assist in selecting the optimal settings for your application.

Control Mode

The LDC-3926559 measures temperature using a negative temperature coefficient (NTC) thermistor. An NTC thermistor is a device whose resistance decreases as its temperature increases. The sense-current that the controller provides through the thermistor results in a voltage across the thermistor. This voltage is used as a feedback signal by the LDC-3926559 control loop to maintain a constant temperature.

In both constant-temperature and constant-resistance modes, the quantity that is maintained constant by the module is the thermistor resistance. In constant temperature mode (T), the LDC-3926559 converts the temperature setpoint to a thermistor resistance setpoint.

The LDC-3926559 uses the Steinhart-Hart equation to convert a temperature to a resistance. The equation describes the nonlinear resistance-versus-temperature characteristics of typical thermistors. Calibrating a thermistor consists of measuring its resistance at various temperatures, and fitting these measured data to the Steinhart-Hart equation. The resulting coefficients C1, C2, and C3 effectively describe the thermistor. More information about the Steinhart-Hart equation is contained in ILX Application Note #4. Contact ILX Customer Service (see page xii for contact information) or go to www.ilxlightwave.com/library/index.html.

To measure the precise temperature of a load, you must use a calibrated thermistor and enter its Steinhart-Hart coefficients C1, C2, and C3 in the TEC page 3 menu (see Basic TEC Operation Instructions on page 11). If the exact temperature is not crucial (within ±1.5 °C) and you are using a 10 kΩ thermistor, use the default constants provided by the LDC-3926559. However, the LDC-3926559 temperature accuracy specifications apply only to a calibrated thermistor with C1, C2, and C3 entered. For more information about calibrating your thermistor, go to www.ilxlightwave.com/support/index.html and click Technical Solutions.

In effect, constant temperature control mode is the same as constant resistance mode, but the temperature setpoint (TSet) is converted to a resistance setpoint (RSet, the constant-resistance setpoint, is not affected by TSet). If you prefer to avoid the conversion or if you do not know your thermistor's coefficients, but you know the thermistor resistance at a desired operating point, then use constant-resistance mode (R).

The amount of heat a TEC module pumps depends on its drive current. If a constant heat load must be removed or added, use constant current mode (I).

Setting Gain

The control circuit in the LDC-3926559 includes a proportional function. The amount of current provided by the control circuit is proportional to the difference between the measured temperature (resistance) and the setpoint temperature (resistance). The proportionality constant of this circuit is the Gain setting. A higher gain setting causes more current to flow when the load temperature differs from the setpoint temperature, thus causing a quicker correction.

> **Note:** More gain is not always better. A gain setting too high for the load's thermal mass may cause the termperature to oscillate about the setpoint. Selecting the proper gain for your particular application is normally an empirical procedure, with heat load, thermal mass, maximum current, desired settling time, and allowable overshoot all playing a part.

Artisan Technology Group - Quality Instrumentation ... Guaranteed | (888) 88-SOURCE | www.artisantg.com

Selecting a Gain Setting

1. From TEC page 3, set the gain to 30 using the INC/DEC keys, Adjust knob, or keypad.
2. Press **F1** to turn on the output. Allow the load to settle.
3. With the gain field hightlighted, increase the gain setting using the INC/DEC keys until the load temperature oscillates about the setpoint.
4. Press **DEC** until the oscillations cease.

The control circuit also includes a time-based integrating function. The longer the load temperature does not correspond with the setpoint, the more current the integrating section contributes. An integrating term is indispensable in a system that has inertia, such as thermal mass. The integrating circuit is not user adjustable.

Sensor Current

Thermistor resistance changes with temperature. The LDC-3926559 supplies constant current, either 10 µA or 100 µA, through the thermistor so that a temperature change results in a voltage change across the thermistor. This voltage change is sensed by the module and fed back to the control loop. The supply current depends on the thermistor operating temperature range and the required temperature resolution. A general rule of thumb for a 10 kΩ thermistor is to use the 10 µA range for temperatures between –30 °C and +30 °C, and the 100 µA range for temperatures between 10 °C to 70 °C.

Selecting Sensor Current

Select the thermistor sense current of 10 µA or 100 µA in the TEC page 3 menu. Using 10 µA as the sense current allows you to use a maximum thermistor resistance of 450 kΩ. The 100 µA setting allows a 45 kΩ maximum.

1. Press **CHAN** to display the channel menu.
2. Select the desired channel using the Adjust knob or INC/DEC keys.
3. Press **F4** until you reach the TEC page 3.
4. Select 10 µA or 100 µA using the Adjust knob or INC/DEC keys.

To ensure proper current and thermistor selection, certain principles must be considered:

- To ensure measurement accuracy, the voltage across the thermistor must not exceed 5 V.
- To improve control responsiveness and accuracy, the thermistor voltage variations that result when the load temperature deviates from the setpoint must be as large as possible.

  The importance of maximizing voltage variation is shown in Figure 2.9, which shows resistance as a function of temperature for a thermistor. The values shown were selected for simplicity in this example, and may not reflect real thermistor values.

In the example shown in Figure 2.9, the thermistor resistance is 25 kΩ at 20 °C. Deviations of 1 °C from 20 °C cause resistance variations of about 2 kΩ. If using the 10 µA setting, there is 20 mV of feedback to the control circuit. Using the 100 µA setting provides 200 mV of feedback. The larger feedback signal means that the temperature is more precisely controlled.

Artisan Technology Group - Quality Instrumentation ... Guaranteed | (888) 88-SOURCE | www.artisantg.com

Notice also that the lower slope of the curve at the higher temperatures results in a smaller feedback signal. It may be necessary, if you are controlling to higher temperatures, to use a thermistor with a different curve.

If you cannot select your thermistor and its resistance is less than 50 kΩ (at operating temperature), use the 100 µA setting. Use the 10 µA setting in all other cases.

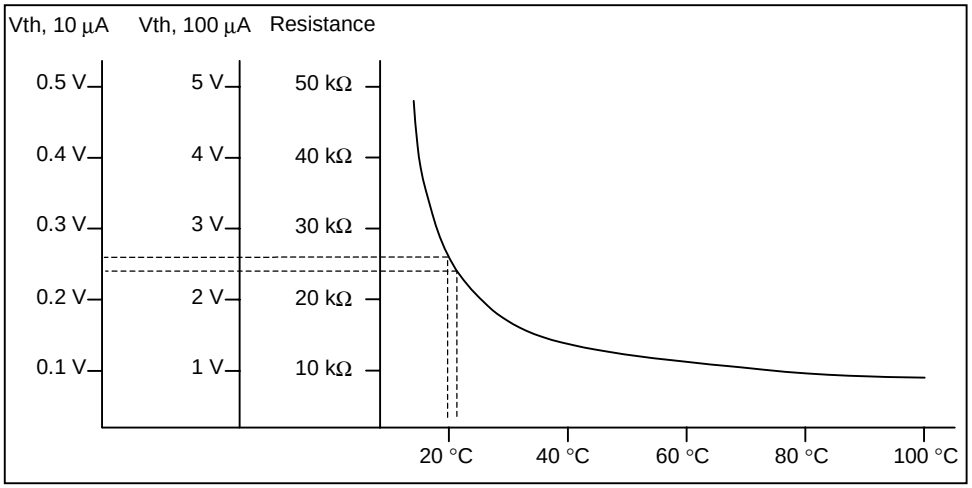

Figure 2.9 Example Thermistor Resistance vs. Temperature

Setting Safety Limits

TEC modules can be damaged by excessive current, and module manufacturers typically specify a maximum safe operating current for their module. The LDC-3926559 provides a current limit feature (ILim) that allows you to set the maximum current that the controller supplies. The ILim setting is on TEC page 2 menu; its units are Amperes.

It is normal for the controller to operate at the current limit, especially when the load temperature is far from the setpoint. ILim appears on the screen when the controller is in a current-limit condition.

If the heatsink is too small for the application, the heatsink eventually becomes heat saturated—a condition where heat is being transferred to the heatsink faster than the heatsink can dissipate the heat. When the heatsink becomes saturated, the TEC current increases in an attempt to cool the load; this additional current creates more heat than can be dissipated and subsequently, more TEC current is applied. This situation is sometimes referred to as *thermal runaway*, and can cause a load and TEC to become damaged.

To help avoid thermal runaway damage, the LDC-3926559 provides a high-temperature limit setting (TLim). When the load temperature exceeds the TLim setting, the LDC-3926559 turns off the TEC current and generates an error. The TLim setting is on the TEC page 1 menu (see Basic TEC Operation Instructions on page 11). Using GPIB, you can disable the high-temperature limit from turning off the controller. See Chapter 3, Remote Operations and Chapter 4, Command Reference for more information about disabling or enabling conditions that turn off the controller.

Artisan Technology Group - Quality Instrumentation ... Guaranteed | (888) 88-SOURCE | www.artisantg.com

Default Settings

When you select Default from the Recall menu, the LDC-3926559 module returns to the following settings:

Output:	Off
Mode:	Constant-Temperature
Temperature setpoint (TSet):	22 °C
TEC current setpoint (ISet):	1.0 A
Current limit (ILim):	1.0 A
Temperature limit (TLim):	80.0 °C
Resistance setpoint (RSet):	10 kΩ
Gain:	3
Sensor current:	100 µA
C1:	1.125 (x 10-3)
C2:	2.347 (x 10-4)
C3:	0.855 (x 10-7)

Retrieving Default Settings

See Chapter 3, Remote Operations for remote execution of the Save and Recall functions.

1. From the Main menu, select **Sys. Config**.
2. Select **Sav**/**Rec** to access the Save/Recall Config. menu.
3. To restore the factory default settings, press the **Default** soft key. Bin 0 contains the factory default settings.

   Note: A checksum from each module is used to ensure the recalled setup matches the user's expectation (in case a module was changed or fails to restore properly). A warning is displayed if a checksum error is found.

   See the LDC-3926 User's Guide for information about saving and recalling user specified settings.

Artisan Technology Group - Quality Instrumentation ... Guaranteed | (888) 88-SOURCE | www.artisantg.com

Artisan Technology Group - Quality Instrumentation ... Guaranteed | (888) 88-SOURCE | www.artisantg.com

CHAPTER 3

REMOTE OPERATIONS

GPIB (General Purpose Interface Bus) is the common name for *ANSI/IEEE Standard 488.2 1987*, an industry standard for interconnecting test instruments in a system. Everything you can do from the front panel can also be done remotely, and in some cases, with more flexibility. For instance, in remote mode you have access to commands for functions not found on the front panel. The following sections show you the fundamentals of operating your LDC-3926559 module remotely through the General Purpose Interface Bus (GPIB) and RS-232 interfaces.

Remote Configuration

This section contains information about the command set, command syntax, as well as error and status registers. Refer to the Chapter 4, Command Reference for information about specific commands.

Command Syntax

This section describes command syntax and structure. You need this information to effectively write GPIB control programs. The syntax of GPIB commands follow the rules defined in the ANSI/IEEE 488.2-1987 standard.

Letters

Any GPIB command or query must contain all of the letters that are shown in upper case in the command definition, though they do not need to be typed in upper case. Some of the device dependent commands include optional letters shown in lower case in the command reference (Chapter 4, Command Reference). Letter case does not matter. Lower case characters are used in this manual to identify optional letters; although, the optional letters must be in the correct sequence. Some examples of what does, and does not, work:

Okay	Not Okay
`DIS`	`DS`
`Disp`	`dsp`
`Displ`	`dply`
`Displa`	`DSPLY`
`Display`	`disply`

Artisan Technology Group - Quality Instrumentation ... Guaranteed | (888) 88-SOURCE | www.artisantg.com

White Space

White space is normally the space character (space bar). A single white space must separate a command from its parameters or data. For example:

Okay	Not Okay
`DELAY 500`	`DELAY500`

To enhance readability, you can use one or more white spaces before a comma, semicolon, or terminator. Since a computer normally puts the terminator at the end of each command string (line), an extra space character at the end of the command line does not affect the command string.

A query has no space between the mnemonic and the question mark. For example:

Okay	Not Okay
`TIMER?`	`TIMER ?`

Note: Too many consecutive white spaces can overflow the 80-byte data I/O buffer.

Terminators

A program message terminator identifies the end of a command string. These are the valid terminator sequences:

- <NL>
- <^END>
- <NL><^END>

Many computers terminate with <CR><NL><^END> (Carriage Return - New Line - EOI). A carriage return (<CR>) is read as a white space. The LDC-3926 terminates its responses with <CR><NL><^END>, unless you use the TERM command to change it.

If you encounter problems with GPIB communications, the terminator string can sometimes be the cause. For users whose GPIB driver defaults expect a carriage return in the terminator, <CR><NL><^END>, the TERM command may be used for convenience (see the Chapter 4 of the LDC-3926 mainframe manual for more information about the TERM command).

Command Separators

You can put more than one command on the same line (same command string) if you separate them with a semicolon.

Note: The semicolon can be preceded by one or more spaces. Examples:

```
TEC:DIS 1; tec:set:t?;
TEC:MODE:t ; TEC:T 25 ; TEC:Const 1.125, 2.347, 0.855 ; TEC:OUT
```

Parameters

Some commands require a parameter. The parameter must be separated from the command by at least one space.

Artisan Technology Group - Quality Instrumentation ... Guaranteed | (888) 88-SOURCE | www.artisantg.com

The syntax symbol `<nrf value>` refers to the flexible numeric representation defined by the GPIB standard. It means that you can represent numbers in integer or floating point form, or in engineering/scientific notation. The IEEE-488.2 standard uses the names NR1, NR2, and NR3 respectively to denote "integer", "floating point", and "scientific notation". For example the number "twenty" may be represented by any of the following ASCII strings:

Integer	20	+20	NR1
Floating point	20.0	+20.0	NR2
Scientific notation	2.0E+1 2.0e+1	+2.0E+1 +2.0e+1	NR3

There are no default values for omitted parameters. If a command is expecting a parameter and none is entered, an error is generated.

For further clarity in programming, the (Boolean) values of one (1) and zero (0) may be used or their names as indicated in the following table.

Table 3.1 Substitute Parameter Names

SUBSTITUTE NAME	VALUE
ON	1
OFF	0
OLD	1
NEW	0
TRUE	1
FALSE	0
SET	1
RESET	0

If multiple parameters are expected, they must be separated with commas. For example, to set the Steinhart-Hart constants (C1, C2, and C3) on a TEC module, the following command may be sent:

```
TEC:CONST 1.111, 2.004, 0.456
```

Table 4.1 on page 31 lists the LDC-3926 commands, with the full path shown for each command and a brief explanation of its usage.

Artisan Technology Group - Quality Instrumentation ... Guaranteed | (888) 88-SOURCE | www.artisantg.com

LDC-3926559 Command Set

The LDC-3926559 has its own module-specific command set, separate from the commands for the LDC-3926 mainframe (see the LDC-3926 User's Guide, Chapter 3 and 4). Figure 3.1 shows all of the usable commands for the LDC-3926559 in conjunction with the LDC-3926 mainframe.

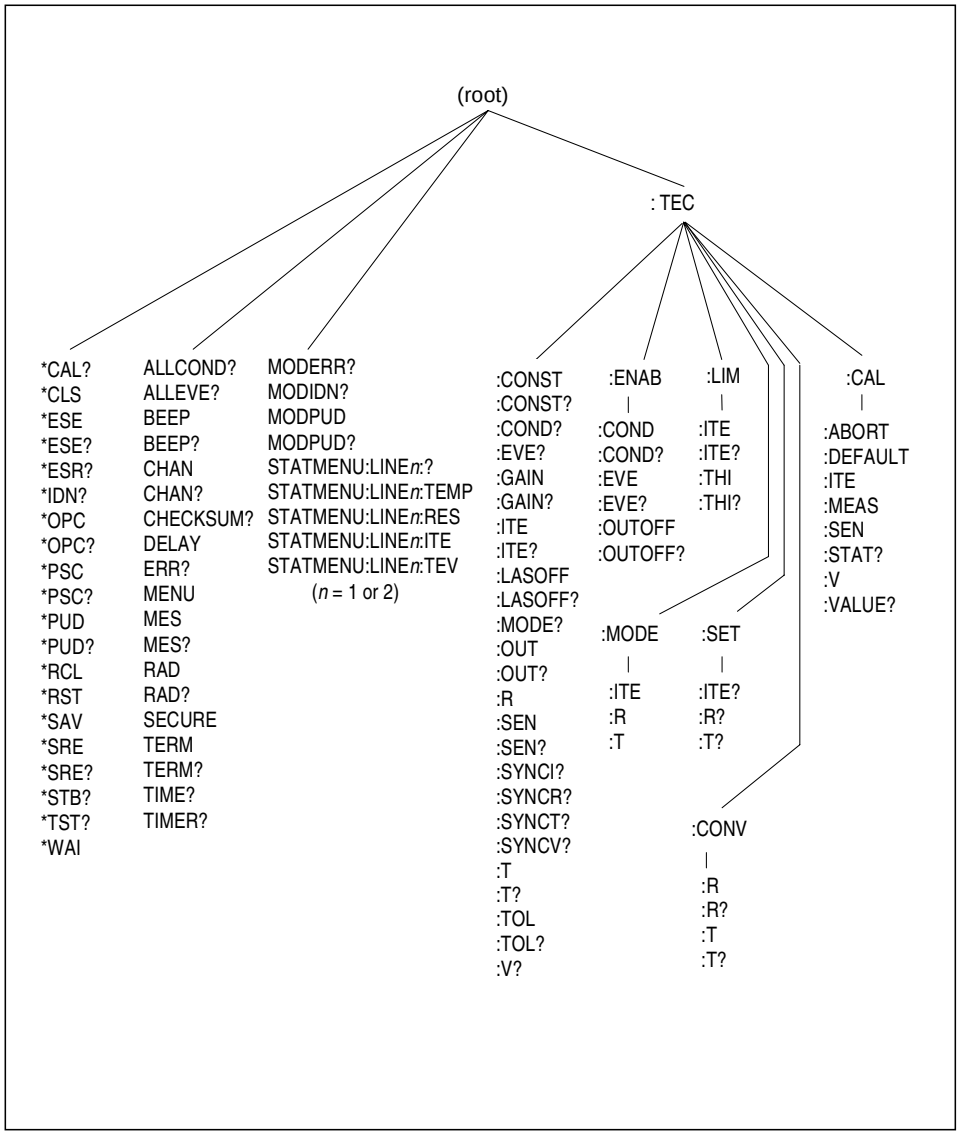

Figure 3.1 LDC-3926559 Command Path Structure

Artisan Technology Group - Quality Instrumentation ... Guaranteed | (888) 88-SOURCE | www.artisantg.com

Syntax Summary

GPIB commands must contain all of the letters shown in upper case in the command definition. Optional letters shown in lower case for some device dependent commands in the command reference are useful for clarity, but must be in the correct sequence.

A single white space must separate a command from its parameters or data. White space is normally the space character (space bar). Other control characters are also interpreted as white space.

Note: Do not use white space before the question mark in a query command.

If you encounter problems with GPIB communications, the terminator string can be the cause. The instrument accepts <NL>, or <^END>, or <NL><^END> as a command line terminator. Many computers terminate with <CR> <NL> <^END> (Carriage Return - New Line - EOI). The instrument ignores the <CR> (Carriage Return) and treats it as white space. The LDC-3926 terminates its responses with <CR><NL><^END>, unless you use the TERM command to change it.

You can put more than one command on the same line (same command string) if you separate them with a semicolon.

GPIB uses a flexible representation for numeric parameters: integer, floating point, or engineering/scientific notation. There are no default values for omitted parameters.

Some device-dependent GPIB commands are compound commands, in which the first mnemonic opens a path to a set of commands relating to that path. The second mnemonic then defines the actual command.

Table 3.2 shows examples of invalid syntax command strings that produce errors:

Table 3.2 Invalid Syntax Command Strings

COMMAND	COMMENT
`TEC:MODE T`	Missing colon, MODE? expected.
`TEC:MODE:R DEC`	Missing semicolon, DEC command generates an error.
`LAS:DIS ?`	Space not allowed before question mark, DIS command expected.
`Las:LDI33;dis?`	Space missing between LDI command and the parameter value, 33.

IEEE 488.2 Common Commands

IEEE 488.2 Common Commands and Queries are distinguished by the "*" which begins each mnemonic. The diagrams below show the syntax structure for common commands, common command queries, and common commands with numeric data required.

Numeric data is required with *PSC (1 = on, 0 = off), *RCL (0 to 10, see Save and Recall on page 15), *SAV (1 to 10, see Save and Recall on page 15), *ESE (0 to 255, see page 34), *SRE (0 to 255, see page 38), and *PUD (used at factory only).

The *CAL? query returns "1" if all LDC-3926 modules' self-calibration routines are completed properly, otherwise "0" is returned.

The *TST? query returns "1" if all LDC-3926 modules that were working at power-up (or at the time of the last *TST? query) have responded to the LDC-3926559 within the past 15 seconds. If any

Artisan Technology Group - Quality Instrumentation ... Guaranteed | (888) 88-SOURCE | www.artisantg.com

modules fail to respond to the mainframe, *TST? returns "0", and those modules are no longer recognized by the system.

A list of all of the IEEE 488.2 Common Commands supported by the LDC-3926559 follows.

*CAL?	*CLS	*ESE
*ESE?	*ESR?	*IDN?
*OPC	*OPC?	*PSC
*PSC?	*PUD	*PUD?
*RCL	*RST	*SAV
*SRE?	*SRE	*STB?
*TST?	*WAI	

Command Timing

This section describes, for each command, whether the command is performed in an overlapped or sequential manner. Command timing states whether the next command can begin while another command is being executed, or if the next command must wait until this command is completed before its execution begins. See Operation Complete Definition on page 25 for information about the operation complete flag.

Sequential/Overlapped Commands

All common commands for the LDC-3926559 module are sequential and most device-dependent commands are executed before the previous command is complete.

All device-dependent commands are executed in an overlapped manner (except the DELAY command); subsequent commands begin before the current command is completed. The common commands are sequential; the next command must wait until the previous command is completed. The operation complete flag (OPC) is set after the conditions outlined in the Operation Complete Definition are satisfied.

The *WAI (common command) is an example of a sequential command which forces the next command to wait until the no-operation-pending flag is true. This is essentially the same as waiting for the OPC flag to become true, because the no-operations-pending flag is used to set the OPC flag (bit 0 of the Standard Event Status Register).

Commands that change the status of the instrument limits, or change its mode or current range, step value, or status enable registers, do not have their OPC flag set until all current writing to non-volatile memory has been completed. This ensures the OPC flag is never set prematurely.

Query Response Timing

Query responses are evaluated at the time the query request is parsed, and not at the time the response message is sent. In most cases this does not create a problem since the time between parsing a query and sending its response is small.

Artisan Technology Group - Quality Instrumentation ... Guaranteed | (888) 88-SOURCE | www.artisantg.com

Status Reporting

The following sections discuss the LDC-3926559 module-dependent aspects of status reporting, including the "OUTOFF" commands and queries. The Output Off Register is used to specify the conditions that force a temperature controller to turn off.

Refer to the LDC-3926 User's Guide, Chapter 3 Remote Operations for more detailed information about standard status structures and mainframe-related commands.

Status Registers

The temperature controller in an LDC-3926559 has its own Condition register and Event register. These registers indicate the existence or occurrence of conditions or events of interest. An example of a condition is "Current drive is in current limit". An example of an event is "Current drive went into current limit". A program running on a host controller may poll a module loaded into the LDC-3926 mainframe to determine if a condition exists or an event has happened.

Alternatively, a controller program may set up the modules to report only conditions or events of interest when they occur. The controller program can then simply read the mainframe's All-Condition or All-Event registers (using the ALLCOND? and ALLEVE? queries) to determine if any interesting situations exist, and then only poll the module that has indicated the situation. When a selected condition exists in a module, the mainframe's Condition register has the bit corresponding to that module set. When a selected event has occurred in a module, the bit corresponding to that module is set in the Event register.

Each channel of the LDC-3926 may contribute to the Condition and Event registers. For the LDC-3926559 module, the enabled conditions of the temperature controller are logically ORed, and the summary is passed to the appropriate bit of the Condition register (see Figure 3.2 on page 26). Likewise, the enabled events of the temperature controller are logically ORed, and the summary is passed to the appropriate bit of the Event register (see Figure 3.3 on page 26). The appropriate bit corresponds to the channel number: bits 0-15 correspond to modules in channels 1-16.

Furthermore, you can set up the mainframe so that when a situation of interest occurs in one or more modules, the mainframe generates an SRQ (Service Request) to the host controller.

For example, you may want the LDC-3926 to interrupt the host controller in the event of TEC's temperature going out of tolerance. As Figure 3.3 on page 26 shows, bit 9 of TEC's Event register is set when the temperature goes into or out of tolerance. To enable that event to be reported, set bit 9 in TEC's Enable Event register using the command TEC:ENAB:EVE 512. This allows an In Tolerance event to be passed to the Event register in the LDC-3926 mainframe. You can monitor the event status by using the ALLEVE? query, and you can monitor the summary using the *STB? query. To generate the SRQ (interrupt) for our example, you must also set the Service Request Enable Register, using *SRE 1, to allow the ALLEVE summary to generate the interrupt.

Operation Complete Definition

Bit 0 of the Standard Event Status register contains the status of the Operation Complete flag. Enabling this bit via the *ESE command allows you to update Bit 5 of the status byte. Then, if the SRE mask has bit 5 set, and you issue an *OPC command, the SRQ signal is generated upon completion of the currently processed commands. This is used to initiate service request routines that depend on the completion of all previous commands.

The LDC-3926559 defines Operation Completeness as the state when all sequential and overlapped commands are completed. Most commands are sequential; only a few are overlapped.

Artisan Technology Group - Quality Instrumentation ... Guaranteed | (888) 88-SOURCE | www.artisantg.com

See Sequential/Overlapped Commands on page 24 and refer to your module instruction manual for a list of overlapped commands.

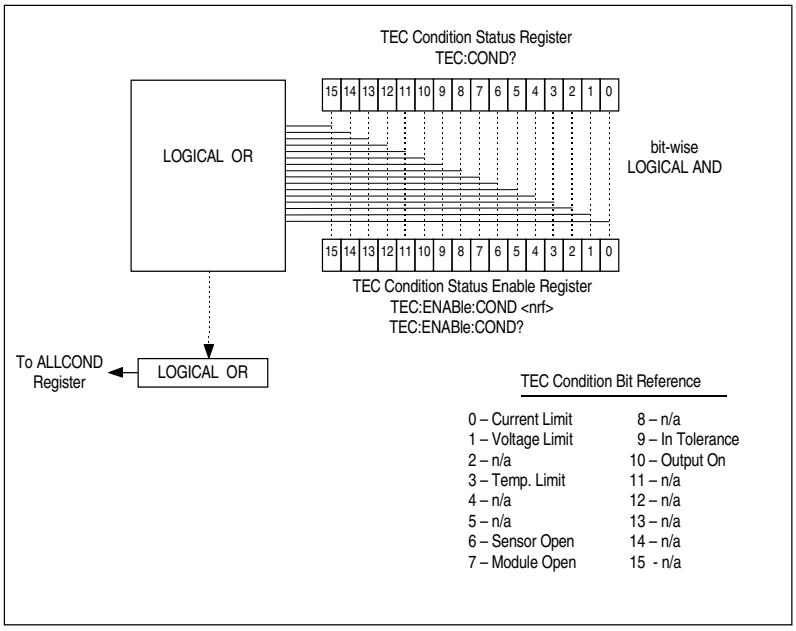

Figure 3.2 Status Condition Registers

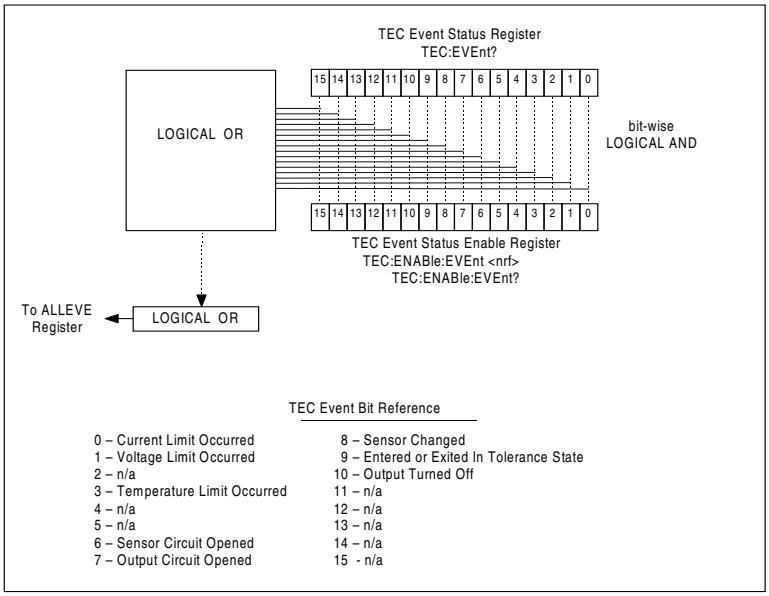

Figure 3.3 Event Status Registers

Artisan Technology Group - Quality Instrumentation ... Guaranteed | (888) 88-SOURCE | www.artisantg.com

The bits in the module's Condition Register reflect, as closely as possible, the state of the instrument. These bits are therefore dynamic: they are set or cleared as conditions come or go.

The bits in a module's Event Registers are "sticky": when an event occurs, the corresponding bit remains set until the user reads the Event Register.

Output Off Registers

The Output Off Enable Registers allow you to specify the conditions that cause the outputs to turn off automatically. The selectable events and conditions that turn off the outputs are shown in Table 3.3.

Table 3.3 LDC-3926559 TEC Output Off Register Contents

Bit Number	Condition	Default Value	Decimal Value
0	Current Limit	0 (Disabled)	1
1	Voltage Limit	0	2
2	n/a	0	4
3	Temperature Limit	1 (Enabled)	8
4	n/a	0	16
5	n/a	0	32
6	Sensor Open	1	64
7	Module Open	1	128
8	Sensor Changed	0	256
9	Not In Tolerance	0	512
10	Sensor Shorted	1	1024
11	n/a	0	2048
12	n/a	0	4096
13	n/a	0	8192
14	n/a	0	16384
15	n/a	0	32768

The default (factory) settings for the TEC Output Off registers are also shown in Table 3.3. The default contents of each register are 1224 (decimal). The contents of the Output Off registers are not affected by the *PSC (Power-On Status Clear) command.

Artisan Technology Group - Quality Instrumentation ... Guaranteed | (888) 88-SOURCE | www.artisantg.com

Error Messages

This section contains descriptions of the errors that are specific to the LDC-3926559 module. These are the error codes that the module reports in response to the MODERR? query. Refer to the LDC-3926 Manual, for a list of mainframe error codes and descriptions (the codes returned in response to the ERR? query).

Testing for Errors in Remote Operation

For more information about specific GPIB commands, see Chapter 4, Command Reference.

1. Send the query `ERR?` to read the system errors and module error summary.

   This allows you to error-check the LDC-3926 as a whole. If any module errors are present, the corresponding bit of the module error summary is set. For example, suppose the mainframe responds to an ERR? query with the string 0.0000000001100000. The zero to the left of the comma indicates that there are no mainframe errors, and the binary representation to the right of the comma indicates that there are errors on channels 7 and 6.

2. Send the query `MODERR?` to read the module errors.

   For example, type `CHAN 7;MODERR?` to return the errors in module 7, and `CHAN 6;MODERR?` returns any errors in module 6. For more information about mainframe errors, refer to the LDC-3926 Manual.

Note: Errors codes not listed are reserved for future design use

Table 3.4 Error Codes

Error Code	Explanation
E-103	Length of arbitrary block is different from expected length.
E-104	Parameter is an undefined numeric type.
E-105	Parameter has an invalid exponent.
E-106	A digit was expected in the parameter but was not found.
E-114	Specified arbitrary block length is invalid.
E-123	Command is not found.
E-126	Wrong number of parameters for command.
E-201	Parameter value out of range.
E-202	Error in conversion of parameter type.
E-203	Command is a "secure" command, but secure commands are disabled.
E-204	Suffix is invalid.
E-205	Expected Boolean parameter is invalid.
E-206	Error in conversion to signed 16-bit integer.
E-207	Error in conversion to unsigned 16-bit integer.
E-208	Error in conversion to signed 32-bit integer.
E-209	Error in conversion to unsigned 32-bit integer.
E-210	Error in conversion to floating-point number.
E-211	Error in conversion to character pointer.
E-212	Error in conversion to byte pointer.

Artisan Technology Group - Quality Instrumentation ... Guaranteed | (888) 88-SOURCE | www.artisantg.com

Table 3.4 Error Codes

Error Code	Explanation
E-214	Response is too long to output.
E-222	Set value is over range.
E-223	Set value is under range.
E-226	Error in arbitrary block specification.
E-402	Open Sensor caused TEC to turn off.
E-403	Open Module (Open Circuit) caused TEC to turn off.
E-404	Current Limit caused TEC to turn off.
E-405	Voltage Limit caused TEC to turn off.
E-407	Temperature Limit caused TEC to turn off.
E-409	Sensor Change caused TEC to turn off.
E-410	Out-of-Tolerance condition caused TEC to turn off.
E-415	Sensor Shorted caused TEC to turn off.
E-416	New setting resulted in invalid TEC setpoint.
E-601	Internal error: recalled bin has incorrect checksum. (Settings do not match bin).
E-602	Internal error: task synchronization error.
E-620	Internal error: resource unavailable.
E-621	Internal error: message undeliverable to task.
E-622	Internal error: could not send message to mainframe.
E-623	Internal error: could not convert setting to valid setpoint.
E-802	Calibration error: measurement entered before calibration was ready.
E-803	Calibration error: invalid sensor specified for calibration.

Artisan Technology Group - Quality Instrumentation ... Guaranteed | (888) 88-SOURCE | www.artisantg.com

Artisan Technology Group - Quality Instrumentation ... Guaranteed | (888) 88-SOURCE | www.artisantg.com

CHAPTER 4

COMMAND REFERENCE

This chapter is a reference for all of the commands for the LDC-3926559 6-Amp Temperature Control Module. It contains an overview of the remote commands used by the module, shown in Table 4.1, as well as detailed command descriptions, listed in alphabetical order.

GPIB Commands

Table 4.1 GPIB Command Summary Reference List

NAME	Parameters	FUNCTION
`*CAL?`	none	Used for the A/D calibration procedure.
`*CLS`	none	Resets the Standard Event Register, Status Byte and Error Queue to zero.
`*ESE`	1	Used to load the Standard Event Status Enable Register.
`*ESE?`	none	Sets the summary bit (bit 5) in the Status Byte.
`*ESR?`	none	Returns the value of the **STANDARD EVENT REGISTER**.
`*IDN?`	none	Returns the **DEVICE IDENTIFICATION** string.
`MODERR?`	none	Returns the error codes (up to 10) from the module.
`MODIDN?`	none	Returns identification data from the module.
`MODPUD`	1	Used at factory to set product information.
`MODPUD?`	none	Returns factory-set product information.
`*OPC`	none	Generates the **OPERATION COMPLETE** message in the Standard Event Status Register .
`*OPC?`	none	Places an ASCII character 1 into the Output Queue.
`*PSC`	1	Used to avoid any undesirable service requests.
`*PSC?`	none	Queries the power-on-status-clear flag.
`*PUD`	none	Stores data unique to the instrument.
`*PUD?`	none	Retrieves the contents of the *PUD storage area.
`*RCL`	1	Recall a stored setup configuration
`*RST`	none	Performs a device reset.
`*SAV`	1	Save the current setup configuration

Artisan Technology Group - Quality Instrumentation ... Guaranteed | (888) 88-SOURCE | www.artisantg.com

Table 4.1 GPIB Command Summary Reference List

NAME	Parameters	FUNCTION
`*SRE`	1	Sets the Service Request Enable Register bits to allow generation of the user-selectable service requests.
`*SRE?`	none	Determines the current contents of the Service Request Enable Register.
`STATMENU:LINE`*n*`?`	none	Returns the name of the measurement that is displayed on line *n* of the status menu. (*n* can be either 1 or 2).
`STATMENU:LINE`*n*`:TEMP`	none	Sets line *n* of the status menu to display TEC temperature.
`STATMENU:LINE`*n*`:ITE`	none	Sets line *n* of the status menu to display TEC current.
`STATMENU:LINE`*n*`:RES`	none	Sets line *n* of the status menu to display thermistor resistance.
`STATMENU:LINE`*n*`:TEV`	none	Sets line *n* of the status menu to display TEC forward voltage.
`*STB?`	none	Reads the Status Byte.
`TEC:CAL:ABORT`	none	Aborts calibration.
`TEC:CAL:DEFAULT`	none	Stores default calibration values for selected cal.
`TEC:CAL:ITE`	none	Selects ITE calibration.
`TEC:CAL:MEAS`	1	Enters an actual (measured) value during cal.
`TEC:CAL:SEN`	1	Selects thermistor (temperature sensor) cal.
`TEC:CAL:STAT?`	none	Queries the status of calibration.
`TEC:CAL:V`	none	Selects voltage-measurement calibration.
`TEC:CAL:VALUE?`	1	Queries a calibration value; for use at factory only.
`TEC:COND?`	none	Queries the value of the Condition Status Register.
`TEC:CONST`	3	Enters the Steinhart-Hart coefficients.
`TEC:CONST?`	none	Queries the values of the Steinhart-Hart coefficients.
`TEC:CONV:R`	1	Converts a resistance (kΩ) to temperature (°C).
`TEC:CONV:R?`	0 or 1	Returns the equivelent temperature (°C) of the last conversion.
`TEC:CONV:T`	1	Converts a temperature (°C) to resistance (kΩ).
`TEC:CONV:T?`	0 or 1	Returns the equivelent resistance (kΩ) of the last conversion.
`TEC:ENAB:COND`	1	Enters the value for the Condition Status Enable Register.
`TEC:ENAB:COND?`	none	Queries the contents of the Condition Status Enable Register
`TEC:ENAB:EVE`	1	Enters the value for the Event Status Enable Register.
`TEC:ENAB:EVE?`	none	Queries the contents of the Event Status Enable Register.
`TEC:ENAB:OUTOFF`	1	Enters the value for the Output Off Enable Register.
`TEC:ENAB:OUTOFF?`	none	Queries the contents of the Output Off Enable Register.
`TEC:EVE?`	none	Queries the contents of the Event Status Register.
`TEC:GAIN`	1	Sets the control loop gain.
`TEC:GAIN?`	none	Queries the control loop gain setting.
`TEC:ITE`	1	Enters the constant-current setting.
`TEC:ITE?`	none	Queries the measured output current.
`TEC:LIM:ITE`	1	Enters the Current Limit setting.
`TEC:LIM:ITE?`	none	Queries the Current Limit setting.
`TEC:LIM:THI`	1	Enters the Temperature Limit setting.
`TEC:LIM:THI?`	none	Queries the Temperature Limit setting.

Artisan Technology Group - Quality Instrumentation ... Guaranteed | (888) 88-SOURCE | www.artisantg.com

Table 4.1 GPIB Command Summary Reference List

NAME	Parameters	FUNCTION
TEC:LASOFF	2	Enters the channel and source of the laser to turn off.
TEC:LASOFF?	none	Returns the channel and source of the laser to turn off.
TEC:MODE:ITE	none	Selects constant-current control mode.
TEC:MODE:R	none	Selects constant-thermistor resistance control mode.
TEC:MODE:T	none	Selects constant-temperature control mode.
TEC:MODE?	none	Queries the control mode.
TEC:OUT	1	Turns the output on or off.
TEC:OUT?	none	Queries the state of the output: on or off.
TEC:R	1	Enters the constant-thermistor resistance setting.
TEC:R?	none	Queries the measured thermistor resistance.
TEC:SEN	1	Selects sensor (thermistor) type: low or high resistance.
TEC:SEN?	none	Queries the selected sensor type.
TEC:SET:ITE?	none	Queries the constant-current setpoint.
TEC:SET:R?	none	Queries the constant-resistance setpoint.
TEC:SET:T?	none	Queries the constant-temperature setpoint.
TECSYNCI?	none	Synchronized measurement. Returns the TE current in amps.
TECSYNCR?	none	Synchronized measurement. Returns the thermistor resistance in kΩ.
TECSYNCT?	none	Synchronized measurement. Returns the thermistor temperature in °C.
TECSYNCV?	none	Synchronized measurement. Returns the measured TE voltage in volts.
TEC:T	1	Enters the constant-temperature setpoint.
TEC:T?	none	Queries the measured temperature.
TEC:TOL	2	Enters the tolerance parameters.
TEC:TOL?	none	Queries the tolerance parameters.
TEC:V?	none	Queries the measured TE voltage.
*TST?	none	Initiates an internal self-test and returns a response when complete.
*WAI	none	Prevents executing any further commands until the No-Operation-Pending flag is true.

Artisan Technology Group - Quality Instrumentation ... Guaranteed | (888) 88-SOURCE | www.artisantg.com

Command Reference

The Command Reference presents the module commands for remote operation of the LDC-3926559, listed in alphabetical order. See Command Syntax on page 19 for detailed instructions about using the commands.

*CAL?

COMMON
FRONT PANEL
REMOTE

	Adjusts the internal analog to digital (A/D) converter to reference points, then reports results.
Results	Zero = OK
	Non-zero = calibration error
Note	A/D referencing is performed each 10 minutes of inactive time.
Example	*CAL?

*CLS

COMMON
FRONT PANEL
REMOTE

	Clears status event registers: Event Status, Event Status Enable, and Error Queue.
Note	Useful to clear registers before enabling service requests (SRQ).
Example	*CLS

*ESE <nrf value>

Event Status Enable

COMMON
FRONT PANEL
REMOTE

	Enables bits in the standard event status enable register.
Response	The value must be between 0 and 255.

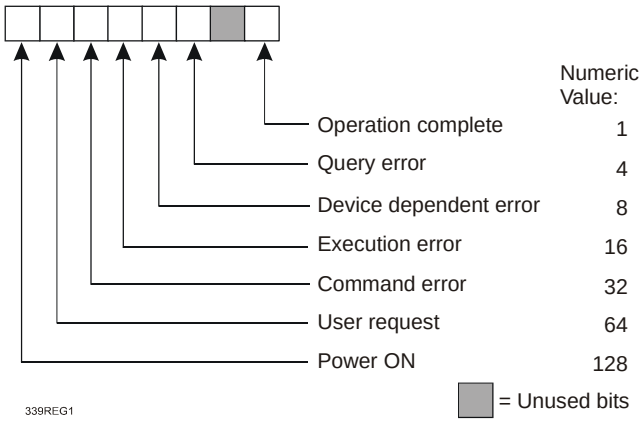

Notes	Bit 5 of the status byte register is set if any enabled conditions are true.
	Setting bit 0 allows you to generate service requests from overlapped commands as previous operations complete. This may be useful for ensuring that an operation is complete before starting a measurement.

Artisan Technology Group - Quality Instrumentation ... Guaranteed | (888) 88-SOURCE | www.artisantg.com

*ESE?

COMMON
FRONT PANEL
REMOTE

Event Status Enable?

Requests the value in the standard event status enable register.

Response — The value must be between 0 and 255.

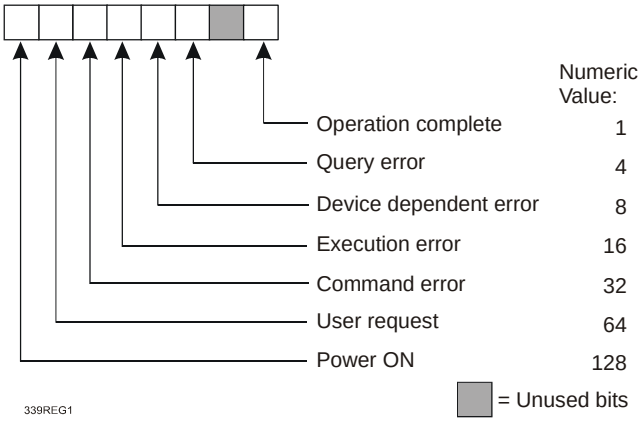

Notes — Bit 5 of the status byte register is set if any enabled conditions are true.
Response is the sum of the enabled bits.

Artisan Technology Group - Quality Instrumentation ... Guaranteed | (888) 88-SOURCE | www.artisantg.com

*ESR?

Standard Event Status Register?

COMMON
FRONT PANEL
REMOTE

Requests the value in the standard event status register.

Response The value must be between 0 and 255.

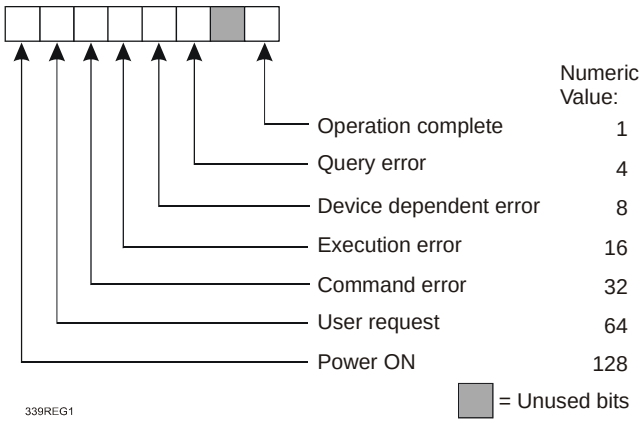

Notes Response is the sum of the enabled bits.
This command allows you to determine which type of error has occurred.

*IDN?

COMMON
FRONT PANEL
REMOTE

Requests the instrument to identify itself.

Response Returns a comma delimited standard format ASCII identification string, from information stored in the instrument during manufacture.

*OPC

Operation Complete

COMMON
FRONT PANEL
REMOTE

Sets the operation complete bit in the Event Status Register when all pending overlapped commands have been completed.

Response None.

Example *OPC

*OPC?

Operation Complete Query

COMMON
FRONT PANEL
REMOTE

Places an ASCII character 1 into the intrument's Output Queue when all pending operations have been finished.

Response 1 - when all overlapped commands are complete.

Example *OPC?

Artisan Technology Group - Quality Instrumentation ... Guaranteed | (888) 88-SOURCE | www.artisantg.com

*PSC <nrf value>

COMMON
FRONT PANEL
REMOTE

Power-on Status Clear

Sets automatic power-on clearing of the enable registers.

Values
0 = disable power-on clearing
1 = enable power-on clearing

Notes
Any non-zero value is interpreted as 1.

Registers affected:

Condition Status Enable	Service Request Enable
Event Status Enable	Standard Event Status Enable

Factory default condition: disabled.

In the disabled state, the values of the enable registers are saved through power OFF/ON. The power-on status clear flag (see PSC?) is set false, disallowing service request interrupts after power-on.

In the enabled state, the enable registers are cleared during power ON. The power-on status clear flag (see PSC?) is set true, allowing service request interrupts after power-on.

Examples
*PSC 0—Disable automatic power-on clearing of the enable registers.
*PSC 1—Enable automatic power-on clearing of the enable registers.

*PSC?

COMMON
FRONT PANEL
REMOTE

Power-on Status Clear?

Requests the state of the power-on status clear flag.

Response
0 The enable registers are saved through power OFF/ON.
1 The enable registers are cleared during power ON.

Registers affected:
Condition Status Enable: Service Request Enable
Event Status Enable: Standard Event Status Enable

See Chapter Three for more information on register structure.

Example
*PSC?—Request state of power-on status clear flag.

*PUD

COMMON
FRONT PANEL
REMOTE

Stores data unique to the instrument, such as calibration date and serial number. This data is protected from change by the "SECURE <nrf>" command and is usually entered by the factory.

Notes
The arbitrary block program data is exactly 25 bytes long.

*PUD?

COMMON
FRONT PANEL
REMOTE

Requests the factory-stored identification string.

Artisan Technology Group - Quality Instrumentation ... Guaranteed | (888) 88-SOURCE | www.artisantg.com

*RCL <nrf value>

Recall

COMMON
FRONT PANEL
REMOTE

	Recalls a stored setup configuration from memory.
Value range	0 through 10
Notes	Setup 0 has a factory-set default configuration.
	If you use GPIB to recall setup 0 (*RCL 0), GPIB mode is set to REMOTE. If you recall setup "0" by the front panel, GPIB mode is set to LOCAL.
	Same function as RECALL on the front panel.
	Use *SAV to store various setup configurations for convenient recall.
	The current setup is automatically stored and recalled at next power-ON, unless you use *PSC to tell the instrument not to do so.
Examples	*RCL 0—Recall the factory default setup.

*RST

Reset

COMMON
FRONT PANEL
REMOTE

	Performs a device reset and the following:
	Sets OCIS state
	Sets OQIS state
Notes	OCIS = Operation-complete Command Idle State. This is the same state as after *OPC: no further operations to complete.
	OQIS = Operation-complete Query Idle State. This is the same state as after *OPC?: no further operations to complete.
	These idle states allow the 8033 to complete its reset process (no operations pending) before continuing with other operations.
Example	*RST

*SAV <nrf value>

Save

COMMON
FRONT PANEL
REMOTE

	Saves the current setup configuration in memory.
Value range	1 through 10
Notes	Configuration 0 is reserved for a factory-set default configuration. See *RCL.
	It is normally not necessary to save the current setup for next power-ON. The current setup is automatically stored for recall at next power-ON unless you use *PSC not to do so.
Example	*SAV 2—Save the current setup configuration as #2.

*SRE <nrf value>

Service Request Enable

COMMON
FRONT PANEL
REMOTE

	Enables bits in the service request enable register.
Notes	Response is the sum of the enabled bits.
Example	*SRE 136—Enable the service request enable register condition summary and error message bits (8 + 128 = 136).

Artisan Technology Group - Quality Instrumentation ... Guaranteed | (888) 88-SOURCE | www.artisantg.com

*SRE?

COMMON
FRONT PANEL
REMOTE

Service Request Enabled?

Requests the value in the service request enable register.

Notes — Response is the sum of the enabled bits.

See Chapter Three for more information about register structure.

Example — *SRE?—Response 136 means the service request enable register condition summary and error message bits are enabled (8 + 128 = 136).

STATMENU:LINE*n*:

COMMON
FRONT PANEL
REMOTE

The STATMENU:LINE*n*: command path is used to get to the status menu display selection commands. (*n* can be either 1 or 2).

The following commands can be reached directly from the STATMENU:LINE*n*: command path.

STATMENU:LINE*n*:TEMP
STATMENU:LINE*n*:ITE
STATMENU:LINE*n*:RES
STATMENU:LINE*n*:TEV

STATMENU:LINE*n*?

COMMON
FRONT PANEL
REMOTE

The STATMENU:LINE*n*? query returns name of the measurement that is currently being displayed on line *n* of the status menu. (*n* can be either 1 or 2).

Parameters — None. The letter *n* is either 1 or 2, to indicate lines on the Status menu.

Notes — The response is character data that represents the measurement that is currently being displayed on line 1 of the selected channel's portion of the status menu. The possible responses are:
1: TEMP TEC temperature
2: ITE TEC current
3: RES themistor resistance
4: TEV TEC forward voltage

The default condition of the status menu displays tec temperature (TEMP) on line 1 and tec current (ITE) on line 2.

Examples — STATMENU:LINE1?—response: displays the last used command on line 1.

STATMENU:LINE*n*:TEMP

COMMON
FRONT PANEL
REMOTE

The STATMENU:LINE*n*:TEMP command sets the measurement that is to be displayed on line *n* of the status menu to TEC temperature (TEMP).

Parameters — None. The letter *n* is either 1 or 2, to indicate lines on the Status menu.

Notes — The default condition of the status menu displays TEC temperature (TEMP) on line 1 and TEC current (ITE) on line 2.

Examples — STATMENU:LINE1:TEMP—response: TEC temperature is displayed on line 1 of the status menu.

Artisan Technology Group - Quality Instrumentation ... Guaranteed | (888) 88-SOURCE | www.artisantg.com

STATMENU:LINE*n*:ITE

COMMON
FRONT PANEL
REMOTE

The STATMENU:LINE*n*:ITE command sets the measurement that is to be displayed on line *n* of the status menu to TEC current (ITE).

Parameters: None. The letter *n* is either 1 or 2, to indicate lines on the Status menu.

Examples: STATMENU:LINE1:ITE—response: TEC current is displayed on line 1 of the status menu.

STATMENU:LINE*n*:RES

COMMON
FRONT PANEL
REMOTE

The STATMENU:LINE*n*:RES command sets the measurement that is to be displayed on line *n* of the status menu to thermistor resistance (RES).

Parameters: None. The letter *n* is either 1 or 2, to indicate lines on the Status menu.

Examples: STATMENU:LINE1:RES—response: thermistor resistance is displayed on line 1 of the status menu.

STATMENU:LINEn:TEV

COMMON
FRONT PANEL
REMOTE

The STATMENU:LINE*n*:TEV command sets the measurement that is to be displayed on line *n* of the status menu to TEC forward voltage (TEV).

Parameters: None. The letter *n* is either 1 or 2, to indicate lines on the Status menu.

Examples: STATMENU:LINE1:TEV—response: tec forward voltage is displayed on line 1 of the status menu.

*STB?

Status Byte?

COMMON
FRONT PANEL
REMOTE

Requests the value in the status byte register.

Notes: Response is the sum of the enabled bits.

See Chapter 3 for more information about register structure.

Example: *STB?—Response 200 means the status byte condition and master status summary bits, and error message bits, are enabled. (8 + 64 + 128 = 200)

Artisan Technology Group - Quality Instrumentation ... Guaranteed | (888) 88-SOURCE | www.artisantg.com

TEC:CAL:

COMMON
FRONT PANEL
REMOTE

The TEC:CAL: command path is used to access the TEC calibration commands.
The following commands may be reached directly from the TEC:CAL: command path.

`TEC:CAL:ABORT`	`TEC:CAL:SEN`
`TEC:CAL:DEFAULT`	`TEC:CAL:STATUS?`
`TEC:CAL:ITE`	`TEC:CAL:V`
`TEC:CAL:MEAS`	`TEC:CAL:VALUE?`

TEC:CAL:ABORT

COMMON
FRONT PANEL
REMOTE

The TEC:CAL:ABORT command is used to exit the TEC calibration procedure without changing the calibration values.

Notes
If this command is issued during a TEC calibration, the calibration will be terminated and the module will operate with the same calibration values as before the calibration mode was started.
This command is intended for use after a false or invalid calibration measurement is entered, or to exit calibration mode before any measurements have been entered.

Examples
TEC1:CAL:ABORT—action: the module exits calibration mode.

TEC:CAL:DEFAULT

COMMON
FRONT PANEL
REMOTE

The TEC:CAL:DEFAULT command sets all of the TEC calibration constants to default values.

Notes
This command should only be used in the case in that the calibration has become corrupted and circumstances make calibration impossible. Measurements and setpoints on TEC are not guaranteed to meet accuracy specifications after this command is issued. Accuracy will remain unspecified until calibration is performed on the module.

CAUTION

The `TEC:CAL DEFAULT` command sets all of the TEC calibration constants to their default values.

Examples
TEC:CAL:Default—action: the module sets all of its TEC calibration constants to their default values.

Artisan Technology Group - Quality Instrumentation ... Guaranteed | (888) 88-SOURCE | www.artisantg.com

TEC:CAL:ITE

COMMON
FRONT PANEL
REMOTE

The TEC:CAL:ITE command is used to initiate the calibration procedure for the TEC current setpoint, current measurement, and current limit.

Notes: This is a service related command. Calibration mode should not be entered unless the user has the proper measurement equipment in place. See the Service Reference portion of this manual for complete calibration instructions.

After this command is issued, the module will enter ITE calibration mode.

Examples: TEC:CAL:ITE—action: the module enters calibration mode for TEC current.

TEC:CAL:MEAS

COMMON
FRONT PANEL
REMOTE

The TEC:CAL:MEAS command is used to enter measured values during the TEC calibration procedure.

Parameters: An <nrf value> that represents the measured value expected for the present TEC calibration state.

Notes: See the Service Reference portion of this manual for complete calibration instructions.

Examples: TEC:CAL:MEAS 1.01—action: the module uses the value 1.01 for the required measurement value.

TEC:CAL:SEN

COMMON
FRONT PANEL
REMOTE

The TEC:CAL:SEN command is used to initiate the calibration procedure for the TEC sensor (thermistor).

Parameters: An <nrf value> representing the thermistor sense current value: 1 = 100 µA, 2 = 10 µA.

Notes: This mode calibrates thermistor resistance measurements. Both thermistor current settings must be calibrated separately.

After this command is issued, the module will enter thermistor calibration mode. See the Service Reference portion of this manual for complete calibration instructions.

Examples: TEC:CAL:SEN 1—action: the module enters calibration mode for 100 µA thermistor current calibration.

TEC:CAL:STATus?

COMMON
FRONT PANEL
REMOTE

The TEC:CAL:STATus? query is to determine whether the module is ready for a calibration value.

Parameters: None. The response will be an <nrf value>; 0 = Not Ready for Measurement, 1 = Ready for Measurement, 2 = Calibration Completed, and 3 = Calibration Aborted.

Notes: If the calibration is aborted, the status value will remain "3" until a calibration is started again.

Examples: TEC:CAL:STAT?—-response: 1, means the module is ready for a calibration measurement to be entered using the "TEC:CAL:MEAS" command.

TEC:CAL:STAT?—-response: 2, means the module has completed calibration.

TEC:Cal:Stat?—response: 0, means the module is not yet ready for the TEC calibration measurement value to be entered.

Artisan Technology Group - Quality Instrumentation ... Guaranteed | (888) 88-SOURCE | www.artisantg.com

TEC:CAL:V

COMMON
FRONT PANEL
REMOTE

The TEC:CAL:V command is used to initiate the calibration procedure for the TEC voltage measurement.

Parameters: None.

Notes: This mode calibrates the TE voltage measurement.

After this command is issued, the module will enter voltage measurement mode. See the Service Reference portion of this manual for complete calibration instructions.

Examples: TEC:CAL:V—action: the module enters calibration mode for TE voltage.

TEC:CAL:VALUE?

COMMON
FRONT PANEL
REMOTE

The TEC:CAL:VALUE? query is used at the factory only.

TEC:COND?

COMMON
FRONT PANEL
REMOTE

The TEC:COND? query returns the contents (at the time of polling) of the TEC Condition Status register.

Parameters: None. The response is the sum of the following:

1 -	Current Limit	256 -	n/a
2 -	Voltage Limit	512 -	In Tolerance
4 -	n/a	1024 -	Output On
8 -	Temperature Limit	2048 -	n/a
16 -	n/a	4096 -	n/a
32 -	n/a	8192 -	n/a
64 -	Sensor Open	16384 -	n/a
128 -	Open Circuit	32768 -	n/a

Notes: The bits in this register reflect, as closely as possible, the actual state of the module. They will change as conditions in the module change. To be sure you detect the occurrence of a condition, it may be appropriate to read the Event Status Register (TEC:EVE?).

You can set up the module to automatically report selected conditions to the LDC-3926 Status Byte. Specify the conditions that are reported using the Condition Status Enable Register (TEC:ENABLE:COND). See the Status Reporting section in Chapter 3 of the LDC-3926 manual for more details.

Examples: TEC:COND?—response: 1024, means that the TEC Output is On.

TEC:COND?—response: 1025, means that the TEC Output is on (1024) and the output is in current limit (1).

Artisan Technology Group - Quality Instrumentation ... Guaranteed | (888) 88-SOURCE | www.artisantg.com

TEC:CONST

COMMON
FRONT PANEL
REMOTE

The TEC:CONST command sets the Steinhart-Hart coefficients for the TEC thermistor.

Parameters: Three <nrf values> are required. The first one represents C1, the second is C2, and the third is C3. The range for all three constants is -99.999 to 99.999. The module scales each value by an exponential value that is appropriate for that constant's part in the Steinhart-Hart equation.

Notes: If any one of the values is less than -99.999, an under-range error will be generated. Values over 99.999 will cause an over-range error. In either case, none of the constants will be modified.

A thermistor's Steinhart-Hart coefficients are typically supplied by the thermistor manufacturer.

Examples: TEC:CONST 0.9,1.2,2.3—action: sets the TEC Steinhart-Hart coefficients to C1=0.9, C2=1.2, C3=2.3.

TEC:CONST?

COMMON
FRONT PANEL
REMOTE

The TEC:CONST? query returns the values of the Steinhart-Hart coefficients.

Parameters: None. The response data represents the values of C1, C2, and C3, in that order.

Notes: These values are pre-scaled so that the exponential value is not given. The actual value of C1 is scaled by 10E-3, C2 by 10E-4, and C3 by 10E-7.

Examples: TEC:CONST?—response: 0.9,1.1,2.2: C1, C2, and C3 are 0.9, 1.1, and 2.2.

TEC:CONV:R

COMMON
FRONT PANEL
REMOTE

The TEC:CONV:R command converts thermistor resistance (kΩ) to temperature (°C).

Parameters: An <nrf value> that corresponds to a resistance in kΩ.

Notes: The selected channel's Steinhart-Hart constants C1, C2 and C3 are used to convert resistance (kΩ) to temperature (°C).

Examples: TEC:CONV:R 12.456—12.456 kΩ is converted to temperature and saved in memory.

TEC:CONV:R?

COMMON
FRONT PANEL
REMOTE

The TEC:CONV:R? query converts thermistor resistance (kΩ) to temperature (°C) and returns the value of the most recent conversion.

Parameters: Either no parameter or an <nrf value> that corresponds to a resistance in kΩ.

Notes: The calibration constants C1, C2 and C3 are used to convert resistance to temperature.

Examples: TEC:CONV:R?—Returns a value that corresponds to the temperature of the most recent conversion.

TEC:CONV:R? 12.789—Converts 12.789 kΩ to temperature and returns a number that corresponds to temperature in °C.

Artisan Technology Group - Quality Instrumentation ... Guaranteed | (888) 88-SOURCE | www.artisantg.com

TEC:CONV:T

COMMON
FRONT PANEL
REMOTE

The TEC:CONV:T command converts temperature (°C) to thermistor resistance (kΩ).

Parameters: An <nrf value> that corresponds to a temperature in °C.

Notes: The selected channel's Steinhart-Hart constants C1, C2 and C3 are used to convert temperature (°C) to resistance (kΩ).

Examples: TEC:CONV:T 25.6—25.6 °C is converted to resistance and saved in memory.

TEC:CONV:T?

COMMON
FRONT PANEL
REMOTE

The TEC:CONV:T? query converts temperature (°C) to thermistor resistance (kΩ) and returns the value of the most recent conversion.

Parameters: Either no parameters or an <nrf value> that corresponds to a temperature in °C.

Notes: The calibration constants C1, C2 and C3 are used to convert temperature to resistance.

Examples: TEC:CONV:T?—Returns a number that corresponds to the resistance value of the most recent conversion.

TEC:CONV:T? 35.5—Converts 35.5 °C to resistance and returns a number that corresponds to resistance in kΩ.

TEC:ENABle:

COMMON
FRONT PANEL
REMOTE

The TEC:ENABle: command path is used to access the TEC status enable commands and queries. The following commands may be reached directly from the TEC:ENABle: command path.

```
TEC:ENABle:COND
TEC:ENABle:COND?
TEC:ENABle:EVEnt
TEC:ENABle:EVEnt?
TEC:ENABle:OUTOFF
TEC:ENABle:OUTOFF?
```


Artisan Technology Group - Quality Instrumentation ... Guaranteed | (888) 88-SOURCE | www.artisantg.com

TEC:ENABle:COND

COMMON
FRONT PANEL
REMOTE

The TEC:ENABle:COND command sets the TEC Condition Status Enable register. The bits in this register determine the bits in the TEC Condition Status register that are summarized in the LDC-3926 Status Byte.

Parameters An <nrf value> whose sum represents the enabled bits:

1 -	Current Limit	256 -	n/a
2 -	Voltage Limit	512 -	In Tolerance
4 -	n/a	1024 -	Output On
8 -	Temperature Limit	2048 -	n/a
16 -	n/a	4096 -	n/a
32 -	n/a	8192 -	n/a
64 -	Sensor Open	16384 -	n/a
128 -	Open Circuit	32768 -	n/a

Notes This register can be read using the TEC:ENABle:COND? query.

See the Status Reporting section in Chapter 3 of the LDC-3926 mainframe manual for more information regarding condition reporting.

Examples TEC:ENAB:COND 9—action: the only conditions from the module that are reported to the LDC-3926 Status Byte are the Temperature Limit (8) and Current Limit (1) conditions.

TEC:ENABle:COND?

COMMON
FRONT PANEL
REMOTE

The TEC:ENABle:COND? query returns the value of the TEC Condition Status Enable register.

Parameters None. The response is the sum of the following:

1 -	Current Limit	256 -	n/a
2 -	Voltage Limit	512 -	In Tolerance
4 -	n/a	1024 -	Output On
8 -	Temperature Limit	2048 -	n/a
16 -	n/a	4096 -	n/a
32 -	n/a	8192 -	n/a
64 -	Sensor Open	16384 -	n/a
128 -	Open Circuit	32768 -	n/a

Notes The enabled TEC conditions can be set by using the TEC:ENABle:COND command.

The TEC condition status can be monitored by the TEC:COND? query.

Examples TEC:ENAB:COND?—response: 640, means that only the following two conditions will be reported (in summarized form) to the LDC-3926 Status Byte: In Tolerance (512) and Open Circuit (128).

Artisan Technology Group - Quality Instrumentation ... Guaranteed | (888) 88-SOURCE | www.artisantg.com

TEC:ENABle:EVEnt

COMMON
FRONT PANEL
REMOTE

The TEC:ENABle:EVEnt command sets the TEC Event Status Enable register. The bits in this register determine the TEC events that are summarized in the LDC-3926.

Parameters An <nrf value> whose sum represents the events that are enabled:

1 -	Current Limit Occurred	256 -	Sensor Type Was Changed While Output On
2 -	Voltage Limit Occurred	512 -	In-Tolerance Condition was Entered or Exited
4 -	n/a	1024 -	Output Turned Off
8 -	Temperature Limit Occurred	2048 -	n/a
16 -	n/a	4096 -	n/a
32 -	n/a	8192 -	n/a
64 -	Sensor Circuit Opened	16384 -	n/a
128 -	Output Circuit Opened (Open Circuit)	32768 -	n/a

Notes The contents of this register are read with the TEC:ENABle:EVEnt? query.

Events can be monitored using the TEC:EVE? query.

See the Status Reporting section in Chapter 3 of the LDC-3926 User's Guide for more information regarding event reporting.

Examples TEC:ENAB:EVENT 136—action: only the "Open Circuit" (128) and "Temperature Limit" (8) events will be reported (in summarized form) to the LDC-3926 Status Byte.

TEC:ENABle:EVEnt?

COMMON
FRONT PANEL
REMOTE

The TEC:ENABle:EVEnt? query returns the contents of the TEC Event Status Enable register.

Parameters None. The response is the sum of the following:

1 -	Current Limit Occurred	256 -	Sensor Type Was Changed While Output On
2 -	Voltage Limit Occurred	512 -	In-Tolerance Condition was Entered or Exited
4 -	n/a	1024 -	Output Turned Off
8 -	Temperature Limit Occurred	2048 -	n/a
16 -	n/a	4096 -	n/a
32 -	n/a	8192 -	n/a
64 -	Sensor Circuit Opened	16384 -	n/a
128 -	Output Circuit Opened (Open Circuit)	32768 -	n/a

Notes This register is set using the TEC:ENABle:EVEnt command. The TEC event status can be monitored by the TEC:EVEnt? query.

Examples TEC:ENAB:EVE?—response: 512, means that the "Tolerance Changed" event is the only event that the TEC will report to the LDC-3926 Status Byte.

Artisan Technology Group - Quality Instrumentation ... Guaranteed | (888) 88-SOURCE | www.artisantg.com

TEC:ENABle:OUTOFF

COMMON
FRONT PANEL
REMOTE

The TEC:ENABle:OUTOFF command sets the TEC Output Off Enable register. The bits in this register specify the conditions that will cause TEC to automatically turn off.

Parameters An <nrf value> whose sum represents the enabled bits:

1 -	Current limit	256 -	Sensor Changed
2 -	Voltage limit	512 -	Not In Tolerance
4 -	n/a	1024 -	Sensor Shorted
8 -	Temperature limit	2048 -	n/a
16 -	n/a	4096 -	n/a
32 -	n/a	8192 -	n/a
64 -	Sensor Open	16384 -	n/a
128 -	Module Open (Open Circuit)	32768 -	n/a

Notes Read this register using the TEC:ENABle:OUTOFF? query.

The factory default value for this register is 1224: the conditions that will cause the output to shut off are Sensor Shorted, Module Open, Sensor Open, and Temperature Limit (1024+128+64+8).

If you set bit 9 in this register, the output will shut off whenever the controlled temperature is out of tolerance (specified using the "TOL" command). If the tolerance conditions do not include the ambient temperature, you will not be able to turn on the output. You should wait until the temperature is within your tolerance specification before setting this bit.

Examples TEC:ENAB:OUTOFF 72—action: sets the TEC Output-Off enable register so that either a Sensor Open (64) or Temperature Limit (8) condition will cause the TEC output to be turned off.

TEC:ENABle:OUTOFF?

COMMON
FRONT PANEL
REMOTE

The TEC:ENABle:OUTOFF? query returns the contents of the TEC Output Off Enable register.

Parameters None. The response is the sum of the following:

1 -	Current limit	256 -	Sensor Changed
2 -	Voltage limit	512 -	Not In Tolerance
4 -	n/a	1024 -	Sensor Shorted
8 -	Temperature limit	2048 -	n/a
16 -	n/a	4096 -	n/a
32 -	n/a	8192 -	n/a
64 -	Sensor Open	16384 -	n/a
128 -	Module Open (Open Circuit)	32768 -	n/a

Notes This register can be set by using the TEC:ENABle:OUTOFF command.

Examples TEC:ENAB:OUTOFF?—response: 8, means that the TEC Temperature Limit is the only condition that will cause the TEC output to be turned off.

Artisan Technology Group - Quality Instrumentation ... Guaranteed | (888) 88-SOURCE | www.artisantg.com

TEC:EVEnt?

COMMON
FRONT PANEL
REMOTE

The TEC:EVEnt? query returns the contents of the TEC Event Status register.

Parameters None. The response is the sum of the following:

1 -	Current Limit Occurred	256 -	Sensor Type Was Changed While Output On
2 -	Voltage Limit Occurred	512 -	In-Tolerance Condition was Entered or Exited
4 -	n/a	1024 -	Output Turned Off
8 -	Temperature Limit Occurred	2048 -	n/a
16 -	n/a	4096 -	n/a
32 -	n/a	8192 -	n/a
64 -	Sensor Circuit Opened	16384 -	n/a
128 -	Output Circuit Opened (Open Circuit)	32768 -	n/a

Notes The events in this register will not be reported to the LDC-3926 Status Byte unless they are selected using the TEC:ENABle:EVEnt command.

The event status register is only cleared when it is read, or in response to a *CLS command.

Examples TEC:EVE?—response: 131, means that an "Output Circuit Opened" event (128), a "Voltage Limit Occurred" event (2), and a "Current Limit Occurred" event (1) have occurred since the last TEC:EVEnt? query.

TEC:GAIN

COMMON
FRONT PANEL
REMOTE

The TEC:GAIN command sets the TEC control loop gain.

Parameters An <nrf value> between 1 and 127, that represents the gain. The value will be rounded to the nearest integer.

Notes An error is generated if the value is invalid or not between 1 and 127.

Examples TEC:GAIN 40—action: sets the TEC control loop gain to 40.

TEC:GAIN?

COMMON
FRONT PANEL
REMOTE

The TEC:GAIN? query returns the value of the TEC control loop gain.

Parameters None. The response is an integer value between 1 and 127.

Notes The optimum gain to use depends on the characteristics of the device you are controlling.

Examples TEC:GAIN?—response: 33, means the measured TEC control loop gain is set to 33.

Artisan Technology Group - Quality Instrumentation ... Guaranteed | (888) 88-SOURCE | www.artisantg.com

TEC:ITE

COMMON
FRONT PANEL
REMOTE

The TEC:ITE command sets the TEC constant-current setpoint.

Parameters: An <nrf value> representing the ITE setpoint, in Amps.

Notes: This command will modify the ITE setting regardless of control mode, but the setting will only be used in constant-current mode.

This setting is read using the TEC:SET:ITE? query.

In constant-temperature or constant-resistance mode, the LDC-3926559 applies a positive current to cool a device. A negative current is assumed to heat a device.

Examples: TEC:ITE 0.6—action: sets the TEC ITE setpoint to 0.6 Amps.

TEC:ITE?

COMMON
FRONT PANEL
REMOTE

The TEC:ITE? query returns the value of the measured TEC current.

Parameters: None. The response is an <nrf value> representing the measured ITE current, in Amps.

Notes: Response is the measured TEC output current, regardless of control mode.

This measurement is updated approximately once every 600 msec.

Examples: TEC:ITE?—response: -0.7, means the measured TEC output current is –0.7 A.

TEC:LASOFF

COMMON
FRONT PANEL
REMOTE

The TEC:LASOFF command configures the TEC to turn off an external laser current source.

Parameters: Two <nrf values> are required. The first represents channel number of the laser module, and the second represents the laser source output. The range of the channel number is 0 through 17, where 0=NONE and 17=all channel. The range for the laser source output number is 0 to 3, where 0=NONe and 3=BOTH.

Examples: TEC:LASOFF 1,3—action: sets the TEC to turn off both of the laser outputs of channel 1.

TEC:LASOFF 1,2—action: sets the TEC to turn off the number two output of channel 1.

TEC:LASOFF 17,3—action: sets the TEC to turn off all outputs of all the channels.

TEC:LASOFF 0,0—action: sets the TEC not to turn off any laser output in any channel.

TEC:LASOFF?

COMMON
FRONT PANEL
REMOTE

The TEC:LASOFF? Query returns the channel number and output of the laser the TEC module is configured to turn off.

Parameters: NONE. The response data represents the channel number and output of the laser to turn off.

Examples: TEC:LASOFF?—response: 1,2: the TEC is configured to turn off channel 1, source 2.

TEC:LASOFF?—response: 17,3: the TEC is configured to turn off all channels and all outputs.

Artisan Technology Group - Quality Instrumentation ... Guaranteed | (888) 88-SOURCE | www.artisantg.com

TEC:LIMit:

COMMON
FRONT PANEL
REMOTE

The TEC:LIMit: command path is used to access the TEC limit commands.

The following commands may be reached directly from the TEC:LIMit: command path.

```
TEC:LIMit:ITE
TEC:LIMit:ITE?
TEC:LIMit:THI
TEC:LIMit:THI?
```

TEC:LIMit:ITE

COMMON
FRONT PANEL
REMOTE

The TEC:LIMit:ITE command sets the TEC current limit value.

Parameters: An <nrf value> that represents the TEC limit current, in Amps.

Notes: The current limit parameter must be a positive value. It is applied to both positive and negative current drives.

Examples: TEC:LIM:I 0.8—action: the TEC current limit is set to 0.8 A.

TEC:LIMit:ITE?

COMMON
FRONT PANEL
REMOTE

The TEC:LIMit:I? query returns the value of the TEC current limit setting.

Parameters: None. The response is an <nrf value>.

Notes: The current limit is in effect in all control modes.

Examples: TEC:LIM:I?—response: 0.9, means the TEC current limit is 0.9 A.

TEC:LIMit:THI

COMMON
FRONT PANEL
REMOTE

The TEC:LIMit:THI command sets the TEC high temperature limit value.

Parameters: An <nrf value> that represents the TEC high temperature limit, in degrees Celsius.

Notes: By default, the TEC output is turned off when the measured temperature exceeds this setting. This feature can be disabled by clearing bit 3 in the Output Off Enable Register, using the TEC:Enable:Outoff command.

The range for the temperature limit is 0 to 199.9 °C.

Examples: TEC:LIM:THI 87.5—action: set the TEC temperature limit to 87.5 °C.

Artisan Technology Group - Quality Instrumentation ... Guaranteed | (888) 88-SOURCE | www.artisantg.com

TEC:LIMit:THI?

COMMON
FRONT PANEL
REMOTE

The TEC:LIMit:THI? query returns the value of the TEC high temperature limit setting.

Parameters: None. The response is an <nrf value>.

Notes: High temperature limit is valid for all modes of operation. There is no low temperature limit.

Examples: TEC:LIM:THI?—response: 92.0, means the TEC high temperature limit is 92.0 °C.

TEC:MODE:

COMMON
FRONT PANEL
REMOTE

The TEC:MODE: command path is used to access the TEC mode selection commands.

The following commands may be reached directly from the TEC:MODE: command path.

`TEC:MODE:ITE`
`TEC:MODE:T`
`TEC:MODE:R`

TEC:MODE:ITE

COMMON
FRONT PANEL
REMOTE

The TEC:MODE:ITE command selects constant current mode for the TEC.

Parameters: None.

Notes: In this mode, TE current is kept constant, regardless of variations in load temperature.

Examples: TEC:MODE:ITE—action: selects constant-TE current control mode.

TEC:MODE:R

COMMON
FRONT PANEL
REMOTE

The TEC:MODE:R command selects constant thermistor resistance mode for the TEC.

Parameters: None.

Notes: Since thermistor resistance is a function of temperature, this mode also controls load temperature. It bypasses the use of the Steinhart-Hart conversion for setpoint calculation. This allows control of the load temperature in cases where a thermistor's resistance at a desired temperature is known, but its Steinhart-Hart coefficients are not known.

Examples: TEC:MODE:R—action: selects constant thermistor resistance control mode.

Artisan Technology Group - Quality Instrumentation ... Guaranteed | (888) 88-SOURCE | www.artisantg.com

TEC:MODE:T

COMMON
FRONT PANEL
REMOTE

The TEC:MODE:T command selects constant temperature mode for the TEC.

Parameters: None.

Notes: Constant temperature mode is the most frequently used control mode.

Changing control modes causes the TEC to be turned off.

Examples: TEC:MODE:T—action: selects constant temperature control mode for the TEC temperature controller.

TEC:MODE?

COMMON
FRONT PANEL
REMOTE

The TEC:MODE? query returns the TEC control mode.

Parameters: None. The response is a character response representing the control mode. The possible responses are "T", "R", and "ITE" (without quotes).

Notes: Constant current mode is sometimes useful in a multi-stage TEC system, or in a system where the heat load is constant and well known.

Examples: TEC:MODE?—response: T, means that the TEC is in constant temperature control mode.

TEC:OUTput

COMMON
FRONT PANEL
REMOTE

The TEC:OUTput command turns the TEC output on or off.

Parameters: An <nrf value>; 1 = on, 0 = off.

Notes: After the TEC output is turned on, it may be useful to wait until the output is stable before performing further operations, but it is not necessary.

The character strings "OFF" and "ON" may be used in place of "0" and "1".

Examples: TEC:OUT 1—action: turns the TEC output on.

TEC:OUT OFF—action: turns off the TEC.

TEC:OUTput?

COMMON
FRONT PANEL
REMOTE

The TEC:OUTput? query returns the TEC output state.

Parameters: None. The response is an <nrf value>.

Notes: Although the output is on, the output may not have reached the set point value.

The output should always be off when connecting or disconnecting cables to the output connector.

Examples: TEC:OUT?—response: 0, means that the TEC is off.

TEC:OUT?—response: 1, means that the TEC is turned on.

Artisan Technology Group - Quality Instrumentation ... Guaranteed | (888) 88-SOURCE | www.artisantg.com

TEC:R

COMMON
FRONT PANEL
REMOTE

The TEC:R command sets the TEC constant-resistance setpoint.

Parameters: An <nrf value> representing the constant resistance setting, in kΩ.

Notes: This setting is always stored when the command is valid, but it is only used when the TEC is in constant-resistance mode.

This setting is read using the TEC:SET:R? query

Examples: TEC:R 15—action: sets the TEC constant-resistance setpoint to 15 kΩ.

TEC:R?

COMMON
FRONT PANEL
REMOTE

The TEC:R? query returns the value of the TEC measured thermistor resistance.

Parameters: None. The response is an <nrf value> representing the measured thermistor resistance, in kΩ.

Notes: Response is the measured thermistor resistance, regardless of control mode.

This measurement is updated approximately once every 600 msec.

Examples: TEC:R?—response: 16.7, means the measured TEC thermistor resistance is 16.7 kΩ.

TEC:SENsor

COMMON
FRONT PANEL
REMOTE

The TEC:SEN command sets the TEC thermistor sense current.

Parameters: An <nrf value> representing the desired thermistor sense current. The number 1 represents 100 µA and 2 represents 10 µA.

Notes: The sense current is applied through the thermistor, and the resulting voltage is measured by the LDC-3926559 module. The measured voltage range is 0-5V. The best sense current to use depends on the expected thermistor resistance at the setpoint. In general, use 100 µA for a resistance less than 50 kΩ, and 10 µA for larger values. The largest possible voltage swing in the vicinity of the setpoint will result in the best stability.

Examples: TEC:SEN 1—action: sets the TEC thermistor current to 100 µA.

TEC:SEN?

COMMON
FRONT PANEL
REMOTE

The TEC:SEN? query returns the TEC thermistor sense current.

Parameters: None. The response is an <nrf value> representing the sense current. The number 1 represents 100 µA and 2 represents 10 µA.

Notes: The sensor current is always applied, regardless of the control mode.

Examples: TEC:SEN?—response: 1 indicates the sense current is 100 µA.

Artisan Technology Group - Quality Instrumentation ... Guaranteed | (888) 88-SOURCE | www.artisantg.com

TEC:SET:

COMMON
FRONT PANEL
REMOTE

The TEC:SET: command path is used to access the TEC set point queries.

The following queries may be reached directly from the TEC:SET: command path.

`TEC:SET:ITE?`
`TEC:SET:R?`
`TEC:SET:T?`

TEC:SET:ITE?

COMMON
FRONT PANEL
REMOTE

The TEC:SET:ITE? query returns the TEC constant-current setpoint.

Parameters: None. The response is an <nrf value> that represents the constant ITE set point value, in Amps.

Notes: The ITE set point is only in effect when the operating mode is ITE.

Examples: TEC:SET:ITE?—response: -0.5, means the TEC output current set point is –0.5 A.

TEC:SET:R?

COMMON
FRONT PANEL
REMOTE

The TEC:SET:R? query returns the TEC constant thermistor resistance setpoint.

Parameters: None. The response is an <nrf value> that represents the constant resistance set point value, in kΩ.

Notes: The constant-thermistor-resistance set point is only in effect when the operating mode is R.

Examples: TEC:SET:R?—response: 19.6, means the TEC resistance set point is 19.6 kΩ.

TEC:SET:T?

COMMON
FRONT PANEL
REMOTE

The TEC:SET:R? query returns the TEC constant temperature setpoint.

Parameters: None. The response is an <nrf value> that represents the constant temperature set point value, in °C.

Notes: The constant-temperature setting is only in effect when the operating mode is T.

Examples: TEC:SET:T?—response: 17.3, means the TEC temperature setting is 17.3°C.

Artisan Technology Group - Quality Instrumentation ... Guaranteed | (888) 88-SOURCE | www.artisantg.com

TEC:SYNCI?

COMMON
FRONT PANEL
REMOTE

The TEC:SYNCI? query returns the selected channel's measured current in Amps.

Parameters: None. The response is an <nrf value> representing current in Amps.

Notes: This is a "synchronized" measurement: the TEC measurement system is connected to the current-measure signal when this query is received. A current measurement is made, and the result is returned as the response. After the measurement is made, the measurement system returns to its normal function, switching between the various signals and measuring them.

The measurement is initiated as soon as the query is received; the response time is from 200-250 msec. In contrast, the TEC:ITE? query returns immediately, but the measurement can be up to 600 msec old.

Examples: TEC:SYNCI?—response: 1.3, means the measured TE current is 1.3 A.

TEC:SYNCR?

COMMON
FRONT PANEL
REMOTE

The TEC:SYNCR? query returns the measured thermistor resistance in kΩ.

Parameters: None. The response value is an <nrf value> representing resistance in kΩ.

Notes: This is a "synchronized" measurement: the TEC measurement system is connected to the thermistor resistance-measure signal when this query is received. A resistance measurement is made, and the result is returned as the response. After the measurement is made, the measurement system returns to its normal function, switching between the various signals and measuring them.

The measurement is initiated as soon as the query is received; the response time is from 200-250 msec. In contrast, the TEC:R? query returns immediately, but the measurement can be up to 600 msec old.

Examples: TEC:SYNCR?—response: 10.543, means the measured thermistor resistance is 10.543 kΩ.

TEC:SYNCT?

COMMON
FRONT PANEL
REMOTE

The TEC:SYNCT? query returns the measured thermistor temperature in °C.

Parameters: None. The response value is an <nrf value> representing temperature in °C.

Notes: Temperature is derived from the thermistor resistance measurement.

This is a "synchronized" measurement: the TEC measurement system is connected to the thermistor resistance-measure signal when this query is received. A resistance measurement is made, the temperature is calculated, and the result is returned as the response. After the measurement is made, the measurement system returns to its normal function, switching between the various signals and measuring them.

The measurement is initiated as soon as the query is received; the response time is from 200-250 msec. In contrast, the TEC:T? query returns immediately, but the measurement can be up to 600 msec old.

Examples: TEC:SYNCT?—response: 17.9, means the measured thermistor temperature is 17.9 °C.

Artisan Technology Group - Quality Instrumentation ... Guaranteed | (888) 88-SOURCE | www.artisantg.com

TEC:SYNCV?

COMMON
FRONT PANEL
REMOTE

The TEC:SYNCV? query returns the measured forward voltage, in Volts.

Parameters: None. The response value is an <nrf value> representing voltage in Volts.

Notes: This is a "synchronized" measurement: the TEC measurement system is connected to the voltage-measure signal when this query is received. A voltage measurement is made and the result is returned as the response. After the measurement is made, the measurement system returns to its normal function, switching between the various signals and measuring them.

The response time to this query is from 200-250 msec, but the measurement is made as soon as the query is received. In contrast, the TEC:V? query returns immediately, but the measurement can be up to 600 msec old.

Examples: TEC:SYNCV?—response: 1.9, means the measured forward voltage is 1.9 V.

TEC:T

COMMON
FRONT PANEL
REMOTE

The TEC:T command sets the constant-temperature setpoint.

Parameters: An <nrf value> representing the constant temperature setting, in °C.

Notes: This setting is always stored when the command is valid, but it is only used when the TEC is in constant temperature mode.

This setting is read using the TEC:SET:T? query

Examples: TEC:T 12—action: sets the TEC temperature setpoint to 12 °C.

TEC:T?

COMMON
FRONT PANEL
REMOTE

The TEC:T? query returns the value of the measured temperature.

Parameters: None. The response is an <nrf value> representing the measured temperature, in °C.

Notes: The measured temperature is calculated from the measured thermistor resistance using the Steinhart-Hart equation and the Steinhart-Hart coefficients entered using the TEC:CONST command.

This measurement is updated approximately once every 600 msec.

Examples: TEC:T?—response: 13.1, means the measured TEC temperature is 13.1 °C.

Artisan Technology Group - Quality Instrumentation ... Guaranteed | (888) 88-SOURCE | www.artisantg.com

TEC:TOLerance

COMMON
FRONT PANEL
REMOTE

The TEC:TOLerance command sets the TEC tolerance settings.

Parameters: Two <nrf values>. The first represents the tolerance window, the second represents the required time duration. When the controlled quantity (temperature, resistance, or current) is within the tolerance window for the required time duration, the load is said to be "In Tolerance". A bit in the Condition Status Register is set whenever this condition exists.

Notes: The range of the first parameter, the tolerance window, is 0.1 to 10.0. The units of this parameter depend on the control mode. In constant temperature mode, the units of the tolerance window are °C. In constant resistance mode, the window units are kΩ. In constant current mode, the window is in Amps.

The default tolerance parameters are 0.2 and 5. This corresponds to 0.2°C (or 0.2 kΩ, or 0.2 A depending on what mode) for 5 seconds.

If the tolerance window is set too tight for the system, the output may never reach tolerance.

Examples: TEC:TOL 0.5,10—action: sets the TEC tolerance window to 0.5 for 10 seconds.

TEC:TOL?

COMMON
FRONT PANEL
REMOTE

The TEC:TOL? query returns the values of the TEC tolerance window.

Parameters: None. The response is two <nrf values> representing the tolerance parameters, as described in the TEC:TOL command description.

Notes: Measurements are updated approximately every 600 msec. This means that the smallest effective tolerance duration is 0.6 seconds.

Examples: TEC:TOL?—response: 1,10 means the TEC tolerance parameters are 1 and 10. If the control mode is constant temperature, this means the tolerance units are 1°C and 10 seconds.

TEC:V?

COMMON
FRONT PANEL
REMOTE

The TEC:V? query returns the TEC measured TE voltage.

Parameters: None. The response is an <nrf value> representing the measured TE voltage, in Volts.

Notes: This measurement is updated approximately once every 600 msec.

Examples: TEC:V?—response: 3.4 means the TEC measured TE voltage is 3.4 V.

*TST?

Test?

COMMON
FRONT PANEL
REMOTE

Performs internal self-test, then reports results.

Response: 0 = test completed with no errors.
Non-zero = test not completed, or was completed with errors. See Testing for Errors in Remote Operation on page 73 for information about determining and troubleshooting errors.

Example: TST?

Artisan Technology Group - Quality Instrumentation ... Guaranteed | (888) 88-SOURCE | www.artisantg.com

*WAI

Wait to Continue

COMMON
FRONT PANEL
REMOTE

Prevents the instrument from executing any further commands until OPC (operation complete) status is true.

Note — This command can be used to make the instrument wait until an operation is complete before continuing.

Care should be taken to set the GPIB time-out appropriately for use with the *WAI command. After this command (or the Delay) command is sent, the controller may receive up to 20 more commands before the wait period is over. If more than 20 commands are sent before the delay or wait period is over, the additional commands will be ignored and an error E220 will be generated.

Example — *WAI—Wait until OPC status is true.

Artisan Technology Group - Quality Instrumentation ... Guaranteed | (888) 88-SOURCE | www.artisantg.com

Artisan Technology Group - Quality Instrumentation ... Guaranteed | (888) 88-SOURCE | www.artisantg.com

CHAPTER 5

CALIBRATION AND TROUBLESHOOTING

This chapter describes calibration and troubleshooting of the LDC-3926559 6-Amp Temperature Control Module. Descriptions of the required test instruments, calibration conditions, and detailed procedures for calibration of the temperature controllers are included. A troubleshooting guide is also offered for common failure problems.

ILX Lightwave Corporation provides in-house and on-site calibration services for ILX instruments. Most ILX instruments require yearly calibration to ensure performance to published specifications. ILX factory calibrations employ NIST traceable measurement instrumentation, and our calibration engineers and technicians use automated test equipment to accurately and efficiently capture and record calibration data. An original certificate of calibration authenticity is provided with all instrument calibrations, and a detailed report showing any pre-calibration out-of-tolerance conditions is available upon request. Calibration turn-times are normally five business days or less. On-site calibrations can be performed around your production schedule, night or day, seven days a week. Please contact ILX Customer Support (see Comments, Suggestions, and Problems on page xii for contact information) for additional calibration information.

For further assistance with technical solutions and troubleshooting, visit the www.ilxlightwave.com Support page (ilx.custhelp.com), and the Library page (www.ilxlightwave.com/library/index.html) for Application Notes and Technical Notes.

Artisan Technology Group - Quality Instrumentation ... Guaranteed | (888) 88-SOURCE | www.artisantg.com

Calibration

You must perform several calibrations to completely calibrate the LDC-3926559. The calibration consists of calibrating the temperature sensors, the TE bipolar current source, and the TE load voltage measurement. The current limit is calibrated internally by the instrument, using measurements supplied by the user, as part of the calibration process.

The LDC-3926559 must be calibrated while installed in the mainframe. Calibrate the module every 12 months or whenever performance verification indicates that calibration is necessary, such as differences between set point and measurement display values which exceed the accuracy specification. Calibrate the modules under laboratory conditions; typically, 23.0 °C (±3.0 °C). If possible, calibrate the LDC-3926559 at its intended use temperature (if this is within the specified operating temperature range of 0 °C to 40 °C).

Note: Turn on and warm-up the LDC-3926559 for at least one hour before calibration.

Recommended Equipment

Recommended test equipment for calibrating the LDC-3926559 module is listed in Table 5.1. Equipment other than that shown in the table may be used if the specifications meet or exceed those listed.

Table 5.1 Recommended Test Equipment

Description	Specification
DMM	DC Amps (at 6.0 A): ±0.001 A Resistance (at 10 Ω): ±0.02% 0.1 µA or 0.1 mV resolution

Temperature Contoller Calibration

It is necessary to connect various loads to the outputs of the module for the calibration procedure. The devices required for the calibration loads are listed in Table 5.2.

Table 5.2 Temperature Sensor (Thermistor) Calibration

10 µA setting	50 kΩ resistor, 1% 1/4 W 400 kΩ resistor, 1% 1/4 W
100 µA setting	4 kΩ resistor, 1% 1/4 W 40 kΩ resistor, 1% 1/4 W
Current Source Calibration	1 Ω, 50 W resistor, low temperature coefficient resistor
Voltage Measurement Calibration	5 Ω, 50 W resistor, low temperature coefficient resistor

Artisan Technology Group - Quality Instrumentation ... Guaranteed | (888) 88-SOURCE | www.artisantg.com

Local Calibration

The following procedures provide instructions for local calibrations: thermistor calibration, ITE calibration, and TE voltage calibration.

Thermistor Calibration

The following procedure is for calibrating the 100 µA and 10 µA thermistor current sources so that the thermistor resistance measurement for these ranges meet the stated accuracy specifications.

1 Using a multimeter, measure and record the exact resistance of your metal film resistors. You must know the resistance of the resistors within 1 Ω.

Note: For best accuracy in your calibration, ILX recommends a four-point probe resistance measurement. After connecting the probe to the calibration resistor, wait at least thirty seconds before recording the resistance value. Heat from your fingers can change the resistance value.

2 Connect the resistor to the module and turn on the mainframe and allow it to warm up for at least one hour.

3 Enter the 10 µA sensor calibration mode.

3a Press **MAIN**, then the **Sys. Config** soft key.

3b Press the **Cal.** soft key, then the **Cal TEC** soft key.

3c Press the **Therm10 Cal** soft key. The module 10 µA calibration screen appears.

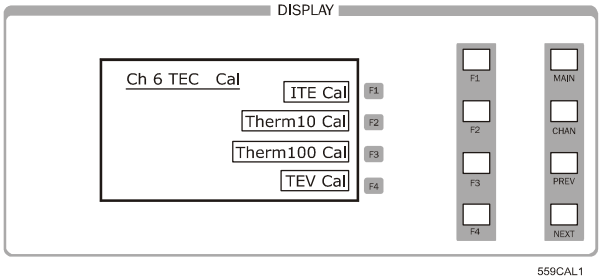

Figure 5.1 Calibration Menu

4 Press **Start**. The internal calibration procedure begins, and the screen prompts you to connect a 50 kΩ resistor.

Artisan Technology Group - Quality Instrumentation ... Guaranteed | (888) 88-SOURCE | www.artisantg.com

5 Connect a 50 kΩ resistor to the TE connector sensor pins (pins 7 and 8).

Allow the measurement to settle for at least 10 seconds. .

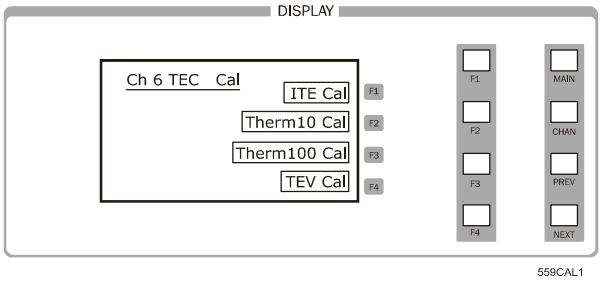

Figure 5.2 Calibration Menu

6 Enter the exact resistance value in kΩ into the RReal adjust field and press **Enter**. Do not enter more than seven characters, including the decimal point.

After an internal calibration, the screen prompts you to attach a 400 kΩ resistor.

7 Connect a 400 kΩ resistor. Allow the measurement to settle for at least 30 seconds.

8 Enter the exact resistance value into the RReal adjust field, and press **Enter**. The calibration procedure makes calculations and displays that the procedure is complete.

9 For the 100 µA sensor calibration, use the Therm100 Cal soft key in step 3c and a 4 kΩ and 40 kΩ resistor in steps 5 and 7 respectively.

ITE Current Calibration

This procedure is for calibrating the TE current source. The internal calibration procedure sets the current to two negative values and two positive values; you must enter the exact current measured at each of these points.

The mainframe must be turned on and warmed up for at least one hour.

1 With the output off, connect a 1 Ω, 50 W resistor across the TEC output terminals (TE Module (+), pins 1 & 2; and TE Module (-), pins 3 & 4). Positive current flows from the module (+) pins to the module (-) pins.

2 Connect a calibrated DMM across the load resistor.

Note: ILX recommends that the load resistor be temperature-controlled during the calibration. The current may be measured directly using an ammeter with a range of at least 6 A, and accurate to within ±0.01 A.

Artisan Technology Group - Quality Instrumentation ... Guaranteed | (888) 88-SOURCE | www.artisantg.com

3 Press **MAIN** to enter the ITE calibration mode.

3a Press the **Sys. Config** soft key, then the **Cal.** soft key.

3b Press the **Cal TEC** soft key, then the **ITE Cal** soft key. The ITE calibration screen appears..

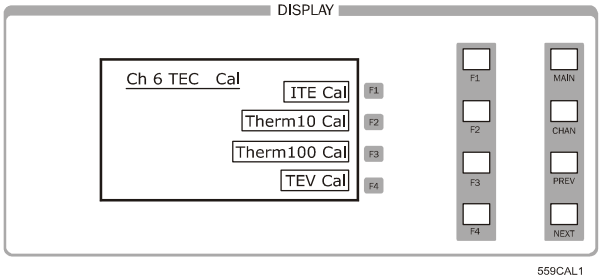

Figure 5.3 Calibration Menu

3c Press **Start**. The internal calibration procedure turns on the output and drives the TE current to approximately 85% of its negative output range. Allow the current to settle for at least 10 seconds.

4 Measure or calculate the actual current to within 0.01 A and enter the value (in Amps) into the IReal adjust field and press **ENTER**.

Make sure to include the minus sign, but do not enter more than five characters, including the minus sign and decimal point. If you enter more than five characters, and the minus sign no longer appears, press **CLEAR** and re-enter the value. Otherwise, the internal calibration procedure aborts or produces an incorrect calibration.

Note: To calculate the TE current (ITE) using Ohm's Law:

$I = E / R$

Where E is the accurately measured voltage across the resistor, R is the accurately measured load resistance, and I is the calculated current in Amps. ILX recommends a 4-point probe resistance measurement.

5 Repeat step 4 for the next three current values that the internal procedure sets. The next three current settings are approximately 30% of negative output range, then 30% of positive output range, and 85% of positive output range. Allow the current to settle for at least 10 seconds at each step.

After you have entered the last actual current measurement, the internal calibration procedure performs the calibration for the setpoint, measurement, and limit circuits. The screen then displays a message indicating that the calibration has finished.

Artisan Technology Group - Quality Instrumentation ... Guaranteed | (888) 88-SOURCE | www.artisantg.com

TE Voltage Calibration

This procedure calibrates the voltage measurment circuit. The internal TE Voltage Calibration procedure sets the current to a negative value and a positive value. You must enter the exact voltage that you measure at both of these points. The mainframe must be turned on and warmed up for at least one hour.

1 With the output off, connect a 5 Ω, 50 W resistor across the TEC output terminals (TE Module [+], pins 1 & 2; and TE Module [-], pins 3 & 4).

2 Connect a calibrated voltmeter across the load resistor.

3 Press **MAIN** to enter the TE voltage calibration mode.

3a Press the **Sys. Config** soft key, then the **TEV Cal.** soft key.

3b Press the **Cal TEC** soft key, then the **TE Volts Cal** soft key. The TE Volts calibration screen appears.

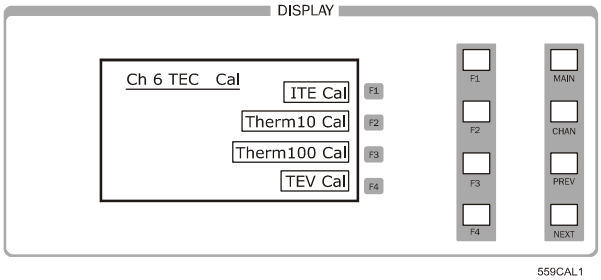

Figure 5.4 Calibration Menu

3c Press the **Start** soft key. The internal calibration procedure turns on the output and drives the TE current to approximately 33% of its negative output range. Allow the current to settle for at least 10 seconds.

4 Measure the voltage across the load resistor to within 0.01 V and enter the value, in Volts, into the VReal adjust field and press **ENTER**. The internal cal procedure sets the output current to approximately 33% of positive output range.

Make sure to include the minus sign, but do not enter more than five characters, including the minus sign and decimal point. If you enter more than five characters, and the minus sign no longer appears, press **CLEAR** and re-enter the value. Otherwise, the internal calibration procedure aborts or produces an incorrect calibration.

Artisan Technology Group - Quality Instrumentation ... Guaranteed | (888) 88-SOURCE | www.artisantg.com

5 Measure the voltage across the load resistor, enter the measurement value in the VReal field, and press **ENTER.** The internal cal procedure calibrates the TE voltage measurement circuit and the screen displays a message indicating that the calibration has finished.

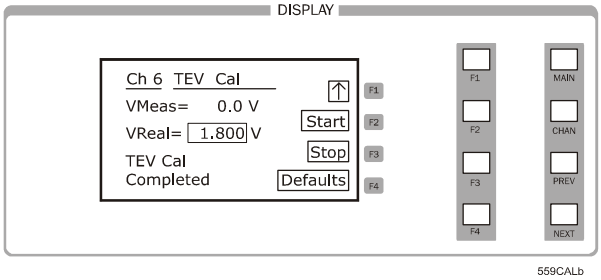

Figure 5.5 TEV Calibration Completed Screen

Remote Calibration

The LDC-3926559 6-Amp Temperature Control Module can be calibrated remotely using the GPIB interface. All of the required calibration commands are listed in Table 4.1 on page 31. These procedures are general guidelines for writing a program to calibrate your instrument.

Thermistor Calibration

The Thermistor Calibration procedure is for remotely calibrating the 100 µA and 10 µA thermistor current sources so that the thermistor resistance measurements for these ranges meet the stated accuracy specifications.

1 Using a multimeter, measure and record the exact resistance of your metal film resistors. You must know the precise resistance of the resistors within 1 Ω.

Note: For best accuracy in your calibration, ILX recommends a four-point probe resistance measurement. After connecting the probe to the calibration resistor, wait at least thirty seconds before recording the resistance value. Heat from your fingers can change the resistance value.

2 Connect a 50 kΩ resistor to the TE connector sensor pins (pins 7 and 8).

3 Install the module into the LDC-3926 mainframe. Turn on the mainframe and allow it to warm up for at least one hour.

4 Send the command `TEC:CAL:SEN 2` to start the10 µA sensor calibration procedure. Allow the measurement to settle for at least 10 seconds.

5 Send the query `TEC:CAL:STATus?` to make sure the internal cal procedure is ready for a measurement.

The calibration procedure is ready for a measurement if it returns the value 1. Query the status until the 1 value is returned.

Artisan Technology Group - Quality Instrumentation ... Guaranteed | (888) 88-SOURCE | www.artisantg.com

6 Enter the exact resistance value (measured in step 1) in kΩ of the first resistor by sending the command `TEC:CAL:MEAS` (value in kΩ).

Example: `TEC:CAL:MEAS 45.678`

Note: The internal calibration procedure stores the measured value entered and briefly changes its measurement status to 0 to indicate that it is not yet ready for another measurement.

7 Connect a 400 kΩ resistor. Allow the measurement to settle for at least 30 seconds.

8 Send `TEC:CAL:STATus?` to make sure the internal cal procedure is ready for a measurement.

The calibration procedure is ready for a measurement if it returns the value 1. Query the status until the 1 value is returned.

When the status query returns 1, enter the value of the second resistor:

9 Enter the exact resistance value (measured in step 7) in kΩ of the second resistor by sending the command `TEC:CAL:MEAS` (value in kΩ).

Example: `TEC:CAL:MEAS 398.877`

The internal calibration procedure completes the calibration of the 10 µA sensor measurement circuit. The calibration procedure sets the status to 2, indicating the calibration is finished.

10 For the 100 µA sensor calibration, repeat the procedure starting with step 2 using a 4 kΩ resistor and 40 kΩ resistor. Then send the command `TEC:CAL:SEN 1` to begin the calibration.

ITE Current Calibration

The ITE Current Calibration procedure is for remotely calibrating the TE current source. The internal calibration procedure sets the current to two negative values and two positive values: you must measure the current at each of these points and send the measurements to the module over GPIB. The internal procedure then uses this information to calibrate the current source setpoint, measurement, and limit circuits. The mainframe must be turned on and warmed up for at least one hour.

1 With the output off, connect a 1 Ω, 50 W resistor across the TEC output terminals (TE Module (+), pins 1 & 2; and TE Module (-), pins 3 & 4). Positive current flows from the module (+) pins to the module (-) pins.

2 Connect a calibrated DMM across the load resistor.

Note: ILX recommends that the load resistor be temperature-controlled during the calibration. The current may be measured directly using an ammeter with a range of at least 6 A, and accurate to within ±0.01 A.

3 Send the command `TEC:CAL:ITE` to begin the ITE calibration.

The internal calibration procedure turns on the output and drives the TE current to approximately 85% of its negative output range. Allow the current to settle for at least 10 seconds.

4 Send the query `TEC:CAL:STATus?` to make sure the internal calibration procedure is

Artisan Technology Group - Quality Instrumentation ... Guaranteed | (888) 88-SOURCE | www.artisantg.com

ready for a measurement.

The calibration procedure is ready for a measurement if it returns the value 1. Query the status until the 1 value is returned.

5 Enter the measured or calculated current in Amps by sending the command `TEC:CAL:MEAS` (current in Amps). The controller sets the output current to approximately 30% of its negative output range. Allow the current to settle for at least 10 seconds.

Example: `TEC:CAL:MEAS -1.45`

The internal cal procedure stores the measured value and briefly changes its measurement status to 0 to indicate that it is not yet ready for another measurement.

Note: Calculate the TE current (ITE) using Ohm's Law:

I = E / R

Where E is the accurately measured voltage across the resistor, R is the accurately measured load resistance, and I is the calculated current in Amps. ILX recommends a 4-point probe resistance measurement.

6 Repeat step 5 for the next three current values that the internal procedure sets. The next three current settings are approximately 30% of negative output range, then 30% of positive output range, and 85% of positive output range. Allow the current to settle for at least 10 seconds at each step.

After you have entered the last measured current, the internal calibration procedure performs the calibration for the setpoint, measurement, and limit circuits. The calibration procedure sets the status to 2, indicating that it is finished.

TE Voltage Calibration

The TE Voltage Calibraion procedure is for remotely calibrating the TE voltage measurement circuit. The internal calibration procedure sets the current to two values; you must measure the voltage at each of these points and send the measurements to the module over GPIB. The mainframe must be turned on and warmed up for at least one hour.

1 With the output off, connect a 5 Ω, 50 W resistor across the TEC output terminals (TE Module [+], pins 1 & 2; and TE Module [-], pins 3 & 4).

2 Connect a calibrated voltmeter across the load resistor.

3 Send the command `TEC:CAL:V` to begin the TE voltage calibration.

The internal calibration procedure turns on the output and drives the TE current to approximately 33% of its negative full range. Allow the current to settle for at least 10 seconds.

4 Send the query `TEC:CAL:STATus?` to make sure the internal cal procedure is ready for a measurement.

The calibration procedure is ready for a measurement if it returns the value 1. Query the status until the value that is returned is 1.

Artisan Technology Group - Quality Instrumentation ... Guaranteed | (888) 88-SOURCE | www.artisantg.com

5 Enter the measured TE voltage by sending the command `TEC:CAL:MEAS` (voltage in Volts).

Example: `TEC:CAL:MEAS -2.91`

The internal calibration procedure stores the measured value and briefly changes its measurement status to 0 to indicate that it is not yet ready for another measurement.

The controller sets the output current to approximately 33% of its positive output range. Allow the current to settle for at least 10 seconds.

6 Send the query `TEC:CAL:STATUS?` to make sure the internal cal procedure is ready for a measurement.

The calibration procedure is ready for a measurement if it returns the value 1. Query the status until the value that is returned is 1.

7 Enter the measured TE voltage by sending the command `TEC:CAL:MEAS` (voltage in Volts).

Example: `TEC:CAL:MEAS 2.85`

After you have entered the second measured voltage, the internal calibration procedure performs the calibration for the voltage measurement circuit. The calibration procedure sets the TEC Cal status to 2, indicating the calibration is finished.

Artisan Technology Group - Quality Instrumentation ... Guaranteed | (888) 88-SOURCE | www.artisantg.com

Troubleshooting

This section is a guide to troubleshooting the LDC-3926559. Some of the more common symptoms are listed here, and the appropriate troubleshooting actions are given. If problems persist, contact ILX Customer Service (see page xii for contact information). Also check the www.ilxlightwave.com Support page, and the Library page for Application Notes and Technical Notes.

Table 5.3 Problem and Action

SYMPTOM	CORRECTIVE ACTIONS
General	
Unit will not power up.	Check AC Power line voltage and power cord connection.
Power on, but outputs have been shut off. Instrument is locked up or instrument resets itself.	This may occur if the instrument loses power (AC line) briefly or line voltage drops below specification. If instrument is locked up, power it off and then on to restart.
Outputs have been shutoff, but there are no module errors.	Check for mainframe errors on the Main menu.
TE Controller	
Power on, but no TE current output.	Check the load connections (pins 1, 2, 3, 4) and operating mode. Make sure the cable between the module and the load is secure.
Power on, but temperature is not controlled.	If there is a SENSOR OPEN indication (E402), check the sensor connections (pins 7,8). Check that the proper sensor current range is selected. The 10 µA setting is required if the thermistor resistance is more than 50 kW. See Application note #2 at www.ilxlightwave.com/library/index.html or contact ILX Customer Service. Check that C1, C2, and C3 are the correct values for your thermistor. See Application note #4 at www.ilxlightwave.com/library/index.html or contact ILX Customer Service. Check that the GAIN setting is not too low and that the ILim value is not too low for your thermal load. See Technical Solutions on the Support page at www.ilxlightwave.com.
Unable to adjust output or parameter.	Ensure that the desired parameter is highlighted. Ensure that you are not trying to set TSet to a higher value than TLim, or ISet higher than ILim.
Output turns off or turns off intermittently.	Check that the AC power cord connection is secure. Power-line dropouts may reset the unit and when power is restored, the output will be off. Check the TE module connections. A high impedance on the TE load can cause the output to exceed the compliance voltage momentarily. If enabled with GPIB, this condition will shut off the output. There are other events or conditions that will turn the output off if enabled with GPIB. See Output Off Registers on page 27 for more information. Check the sensor connections at the module and the load. Changing control modes while the output is on will turn the output off.
Module not recognized by mainframe.	Make sure the module is seated properly.

Artisan Technology Group - Quality Instrumentation ... Guaranteed | (888) 88-SOURCE | www.artisantg.com

Error Codes

The LDC-3926559 indicates general TEC operational error conditions on the display or through the GPIB. This section contains descriptions of the errors that are specific to the LDC-3926559 module. Refer to the LDC-3926 Manual for a list of mainframe error codes and descriptions.

Front panel Error Indicators

When an error occurs, the error code appears on the Status page, the CHAN page, or the respective channel's setup pages on the front panel display.

The error code clears when you exit any page where it appears. Error indicator codes are summarized in Table 5.4. These are the only error codes that appear on the display. See Remote Accessible Error Codes on page 73 for a complete list of all possible error codes.

Table 5.4 Front Panel Error Codes

Error Number	Error Condition	Probable Cause
E402	Open Sensor	An open circuit has been detected in the thermistor connections. Check the connections to the thermistor and to pins 7 and 8 on the 15-pin connector. Check to make sure you are operating in the correct sensor current range.
E403	TE Module Open	An open circuit has been detected in the TEC module connections. Check the wires and connections to the TEC module, and to pins 1,2 and 3,4 on the controller's 15-pin connector.
E404	Current Limit	The controller reached the current limit, and the "current limit" bit of the Output Off Enable register has been set using GPIB.
E405	Voltage Limit	The output driver has reached its voltage limit and the "voltage limit" bit of the Output Off Enable register has been set using GPIB. Check the connection to pins 1,2 and 3,4; a high impedance can cause the voltage limit error to occur.
E407	Temperature Limit	The measured temperature has reached the high-temperature limit setting.
E409	Sensor Changed	The sensor current was changed while the output was on, and the "Sensor Changed" bit of the Output Off Enable register has been set using GPIB.
E410	Tolerance error	The output dropped out of tolerance, and the "Tolerance" bit in the Output Off Enable register has been set.
E415	Sensor Shorted	The measured thermistor resistance is less than 25 Ω, and the "Sensor Shorted" bit in the Output Off Enable register has been set.
E416	Temperature Conversion error	The temperature setpoint could not be converted to a valid control setting. This can happen if the Steinhart-Hart constants are invalid.
E435	Mode Changed	The TEC mode was changed while the TEC output was on

The errors that are enabled in the Output Off Enable register by default at power-up are Open Sensor, TEC Module Open, Temperature Limit, and Sensor Shorted. The Output Off Enable register is not saved at power-down. Some of these errors can be disabled using GPIB. See Chapter 4, Command Reference for more information.

Artisan Technology Group - Quality Instrumentation ... Guaranteed | (888) 88-SOURCE | www.artisantg.com

Remote Accessible Error Codes

This section contains error codes that the module reports in response to the MODERR? query. Refer to the LDC-3926 User's Guide for a list of mainframe error codes and descriptions (the codes returned in response to the ERR? query).

Testing for Errors in Remote Operation

For more information about specific GPIB commands, see teh LDC-3926 User's Guide command reference chapter for information about the ERR? and MODERR? queries.

1. Send the query `ERR?` to read the system errors and module error summary.

   This allows you to error-check the LDC-3926 as a whole. If any module errors are present, the corresponding bit of the module error summary is set. For example, suppose the mainframe responds to an ERR? query with the string 0,0000000001100000. The zero to the left of the comma indicates that there are no mainframe errors, and the binary representation to the right of the comma indicates that there are errors on channels 7 and 6. (Module 16 is on the left, module 1 is on the right).

2. Send the query `MODERR?` to read the module errors.

   For example, type `CHAN 7;MODERR?` to return the errors in module 7, and `CHAN 6;MODERR?` returns any errors in module 6. For more information about mainframe errors, refer to the LDC-3926 User's Guide.

Note: Errors codes not listed are reserved for future design use.

Table 5.5 Error Codes

Error Code	Explanation
E-103	Length of arbitrary block is different from expected length.
E-104	Parameter is an undefined numeric type.
E-105	Parameter has an invalid exponent.
E-106	A digit was expected in the parameter but was not found.
E-114	Specified arbitrary block length is invalid.
E-123	Command is not found.
E-126	Wrong number of parameters for command.
E-201	Parameter value out of range.
E-202	Error in conversion of parameter type.
E-203	Command is a "secure" command, but secure commands are disabled.
E-204	Suffix is invalid.
E-205	Expected Boolean parameter is invalid.
E-206	Error in conversion to signed 16-bit integer.
E-207	Error in conversion to unsigned 16-bit integer.
E-208	Error in conversion to signed 32-bit integer.
E-209	Error in conversion to unsigned 32-bit integer.
E-210	Error in conversion to floating-point number.
E-211	Error in conversion to character pointer.
E-212	Error in conversion to byte pointer.

Artisan Technology Group - Quality Instrumentation ... Guaranteed | (888) 88-SOURCE | www.artisantg.com

Table 5.5 Error Codes

Error Code	Explanation
E-214	Response is too long to output.
E-222	Set value is over range.
E-223	Set value is under range.
E-226	Error in arbitrary block specification.
E-402	Open Sensor caused TEC to turn off.
E-403	Open Module (Open Circuit) caused TEC to turn off.
E-404	Current Limit caused TEC to turn off.
E-405	Voltage Limit caused TEC to turn off.
E-407	Temperature Limit caused TEC to turn off.
E-409	Sensor Change caused TEC to turn off.
E-410	Out-of-Tolerance condition caused TEC to turn off.
E-415	Sensor Shorted caused TEC to turn off.
E-416	New setting resulted in invalid TEC setpoint.
E-601	Internal error: recalled bin has incorrect checksum. (Settings do not match bin).
E-602	Internal error: task synchronization error.
E-620	Internal error: resource unavailable.
E-621	Internal error: message undeliverable to task.
E-622	Internal error: could not send message to mainframe.
E-623	Internal error: could not convert setting to valid setpoint.
E-802	Calibration error: measurement entered before calibration was ready.
E-803	Calibration error: invalid sensor specified for calibration.

Artisan Technology Group - Quality Instrumentation ... Guaranteed | (888) 88-SOURCE | www.artisantg.com

INDEX

A

ANSI/IEEE Standard 488.2 1987 19

C

calibration 34
command
  common 23
  separators 20
  syntax 19
common commands 23
customer service contact information xii

D

default
  settings 17
definition
  operation complete 25
device dependent commands 19, 23

E

event status register 36

G

GPIB 19
  commands 23
  numeric parameters 23
  terminator string 20, 23
  white space 20, 23

I

I/O buffer 20
IEEE standard 488.2 23
invalid syntax commands 23

K

key switch
  laser enable 9

L

laser enable 9

N

nrf value 21
numeric parameters 23

O

OCIS 38
operation complete 36, 59
operation complete definition 25
OQIS 38
output
  laser 9
overlapped/sequential commands 24

P

parameters 20
  substitue names 21
power
  switch 9
protected user data 37

Q

query response timing 24

R

recall
  configuring 38
registers
  status 19

Artisan Technology Group - Quality Instrumentation ... Guaranteed | (888) 88-SOURCE | www.artisantg.com

S

sequential/overlapped commands 24
service, contact information xii
settings
  default 17
setup #0 38
substitute parameter names 21
syntax
  command 19
  invalid command strings 23
  nrf value 21
  summary 23
  white space 20, 23

T

terminator string 20
terminators 20, 23
timing
  query response 24
  sequential and overlapped commands 24

W

white space 20, 23

Artisan Technology Group - Quality Instrumentation ... Guaranteed | (888) 88-SOURCE | www.artisantg.com

Artisan Technology Group is an independent supplier of quality pre-owned equipment

Gold-standard solutions

Extend the life of your critical industrial, commercial, and military systems with our superior service and support.

We buy equipment

Planning to upgrade your current equipment? Have surplus equipment taking up shelf space? We'll give it a new home.

Learn more!

Visit us at **artisantg.com** for more info on price quotes, drivers, technical specifications, manuals, and documentation.

Artisan Scientific Corporation dba Artisan Technology Group is not an affiliate, representative, or authorized distributor for any manufacturer listed herein.

We're here to make your life easier. How can we help you today?

(217) 352-9330 | sales@artisantg.com | artisantg.com

ARTISAN® TECHNOLOGY GROUP