Particle Measuring Systems LiQuilaz SO2
Particle Counting Spectrometer for Liquids

Limited Availability
Parts Grade / As-Is

Open Web Page

https://www.artisantg.com/65969-10

ARTISAN TECHNOLOGY GROUP

Your **definitive** source for quality pre-owned equipment.

Artisan Technology Group
(217) 352-9330 | sales@artisantg.com | artisantg.com

All trademarks, brandnames, and brands appearing herein are the property of their respective owners.

- Critical and expedited services
- In stock / Ready-to-ship
- We buy your excess, underutilized, and idle equipment
- Full-service, independent repair center

Artisan Scientific Corporation dba Artisan Technology Group is not an affiliate, representative, or authorized distributor for any manufacturer listed herein.

LIQUILAZ®-S
Liquid Particle Counter
Operations Manual

Without measurement, there is no control.

PARTICLE MEASURING SYSTEMS®
www.pmeasuring.com

P/N M10195

Artisan Technology Group - Quality Instrumentation ... Guaranteed | (888) 88-SOURCE | www.artisantg.com

LiQuilaz®-S
Liquid Particle Counter

Operations Manual

Particle Measuring Systems Headquarters
5475 Airport Blvd., Boulder, CO 80301, USA
(303) 443-7100 1-800-238-1801 FAX: (303) 449-6870
Instrument Service & Support: 1-800-557-6363
Customer Response Center: 1-877-475-3317

Particle Measuring Systems Europe
Tel: +44 (0)1684-581000
FAX: +44 (0)1684-560337
PMSEurope@pmeasuring.com

Particle Measuring Systems Singapore
Tel: 65 6496 0330 FAX: 65 6496 0357
PMSSingapore@pmeasuring.com

Particle Measuring Systems China
Room 2006,
Mingshen Center Building No. 3131
Kaixuan Road Kuhui District
Shanghai, 20030
China
PMSChina@pmeasuring.com

Particle Measuring Systems Mexico
PMSMexico@pmeasuring.com

Particle Measuring Systems Puerto Rico
PMSPuertoRico@pmeasuring.com

Particle Measuring Systems Asia Pacific
PMSAsiaPacific@pmeasuring.com

Particle Measuring Systems Japan
PMSJapan@pmeasuring.com

P/N M10195 Rev M

Artisan Technology Group - Quality Instrumentation ... Guaranteed | (888) 88-SOURCE | www.artisantg.com

LiQuilaz-S Liquid Particle Counter Operations Manual
P/N M10195 Rev M
© 2009 by Particle Measuring Systems, Inc.
All rights reserved

LiQuilaz® is a registered trademark of Particle Measuring Systems, Inc.
Kalrez® is a registered trademark of E. I. du Pont de Nemours and Company.
Flaretek® is a registered trademark of Entegris, Inc.
KEL-F® is a registered trademark of 3M
Micro-90® is a registered trademark of the International Products Corporation
Radiacwash™ is a trademark of Biodex Medical Systems, Inc.
Super Floss® and Oral-B® are registered trademarks of Procter & Gamble.
Teflon® is a registered trademark of E. I. du Pont de Nemours and Company.

All trademarks appearing in this manual are the property of their respective owners.

DO NOT REPRODUCE OR DISTRIBUTE **CONFIDENTIAL DOCUMENT**

This confidential document contains proprietary information, which is protected by copyright. All rights are reserved. No part of this document may be reproduced, distributed, or transmitted in any form without the prior written consent of Particle Measuring Systems. The information contained in this document is subject to change without notice.

Quality Statement

The Quality Policy of Particle Measuring Systems is to strive to meet or exceed the needs and expectations of our customers and to align the activities of all employees with the common focus of customer satisfaction through continuous improvement in the quality of our products and services.

Environmental Information

This equipment must be properly disposed of at end-of-life by means of an authorized waste management system. Information regarding dismantling of the equipment and location of any hazardous materials can be located on our web site at: http://www.pmeasuring.com/support/papers/disassemblyinstructions.

Artisan Technology Group - Quality Instrumentation ... Guaranteed | (888) 88-SOURCE | www.artisantg.com

Manual Conventions

WARNING
A warning in the text is used to notify the user of the potential for bodily injury or death.

CAUTION
A caution in the text is used to highlight an item that if not done, or incorrectly done, could damage the instrument and/or any materials or devices affected by the instrument.

– — NOTICE — –
A notice in the text is an instructional communication regarding requirements or policies issued by Particle Measuring Systems.

NOTE: A note in the text is used to highlight an item that is of operational importance to the user.

It is important that you observe cautions and warnings while performing the procedures described in this manual. Caution and warning labels are located on and inside the instrument to alert you to potentially hazardous conditions. Please familiarize yourself with this information.

Artisan Technology Group - Quality Instrumentation ... Guaranteed | (888) 88-SOURCE | www.artisantg.com

CE – Declaration of Conformity

CE - Declaration of Conformity

Application of Council Directive(s):	2004/108/EC, 2006/95/EC	
Standard(s) to which Conformity is Declared:	EMC	EN 61326-1: 2006
	Safety	EN 61010-1: 2001
Manufacturer's Name:	Particle Measuring Systems, Inc.	
Manufacturer's Address:	5475 Airport Boulevard, Boulder, CO 80301 USA	
Manufacturer's Telephone/FAX:	(303) 443-7100 / (303) 449-6870	
Distributor's Name:	Particle Measuring Technique, Great Britain	
Distributor's Address	Unit B1 South, Willow End Park	
	Danemoor, Malvern WR14 1XZ	
	Worchestershire, WR13 6NN United Kingdom	
Distributor's Telephone/FAX:	011-44-1684-312950 / 011-44-1684-312969	
Type of Equipment:	Particle Monitoring	
Model No:	LiQuilaz-SO2/SO3/SO5-HF	

I, the undersigned, hereby declare that the equipment specified above conforms to the above Directive(s) and Standard(s).

Signature:

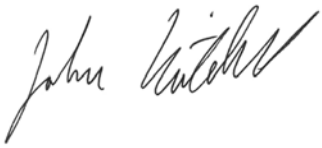

Signature:

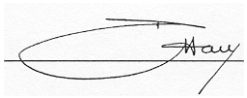

Full Name:	John Mitchell	**Full Name:**	David Hall
Position:	Vice President Engineering	**Position:**	Managing Director
Place: Boulder	Date: June 18, 2008	**Place: Malvern**	Date: June 18, 2008

CAUTION

All I/O cables and accessories must meet current factory specifications in order for this unit to remain in compliance with CE marking requirements. Consult the factory for details.

Artisan Technology Group - Quality Instrumentation ... Guaranteed | (888) 88-SOURCE | www.artisantg.com

Table of Contents

Quality Statement ---------------------------------------ii
Environmental Information -----------------------------------ii
Manual Conventions--iii
CE – Declaration of Conformity------------------------------iv

Chapter 1: Getting Started ------------------------------- 1-1

Specifications --1-2

Chapter 2: Unpacking and Installation ------------------------ 2-1

Unpacking --2-1
Identifying Components and Connections ------------------2-1
Liquid Connections---------------------------------------2-1
Indicator Lights --2-1
Communications Connectors -------------------------------2-3
Installation Requirements ---------------------------------2-4
AC Fuse --2-4
Installation ---2-5

Appendix A: Capillary Cleaning ----------------------------- A-1

Cleaning the Capillary ---------------------------------A-1
Applying Additional Capillary Cleaning Techniques -----------A-2

Appendix B: Communication Protocol----------------------- B-1

Instrument Initialization --------------------------------B-1
Sample Initiate --B-1
Data Processing--B-2
Slow Polling --B-2
Fast Polling ---B-3
Slow Protocol ---B-3
Slow Protocol Commands ---------------------------------B-6
Commands and Responses----------------------------------B-7
Format for Calibration String -----------------------------B-9
Fast Protocol--B-11
Formatting Data--B-13

Appendix C: International Precautions----------------------- C-1

WARNING---C-1
AVERTISSEMENT---C-1
WARNUNG --C-1
ATTENZIONE --C-1
PRECAUSION ---C-1
Hazard Symbols--C-2

Artisan Technology Group - Quality Instrumentation ... Guaranteed | (888) 88-SOURCE | www.artisantg.com

Table of Contents

Symboles de risque ----------C-2
Warnschilder----------C-3
Simboli di pericolo----------C-3
Simbolos de peligro ----------C-4

Appendix D: 有毒或有害的物质和元素 ---------- D-1

Artisan Technology Group - Quality Instrumentation ... Guaranteed | (888) 88-SOURCE | www.artisantg.com

List of Figures

Figure 1-1: LiQuilaz-S Liquid Particle Counter - 1-1
Figure 2-1: LiQuilaz-S Liquid Particle Counter (Front View) - - - - - - - - - - - - - - - - - - 2-2
Figure 2-2: LiQuilaz-S Liquid Particle Counter (Rear Panel) - - - - - - - - - - - - - - - - - - - 2-3

Artisan Technology Group - Quality Instrumentation ... Guaranteed | (888) 88-SOURCE | www.artisantg.com

List of Figures

Artisan Technology Group - Quality Instrumentation ... Guaranteed | (888) 88-SOURCE | www.artisantg.com

Chapter 1
Getting Started

The LiQuilaz®-S liquid particle counter is a sensor designed to measure particles in liquids. The sensor contains the liquid handling and optical system as well as the necessary electronics to measure the size of the particles sampled and to transmit this information to the data display system. The sensor requires AC power, connections to bring the liquid to the sensor, and a connection to the data display system.

Particle Measuring Systems supplies several software packages supporting the LiQuilaz-S liquid particle counter depending upon the application.

The following are the sensitivities of LiQuilaz-S sensors:

- 0.5 µm (S05)
- 0.3 µm (S03)
- 0.2 µm (S02).

All models have a sapphire capillary.

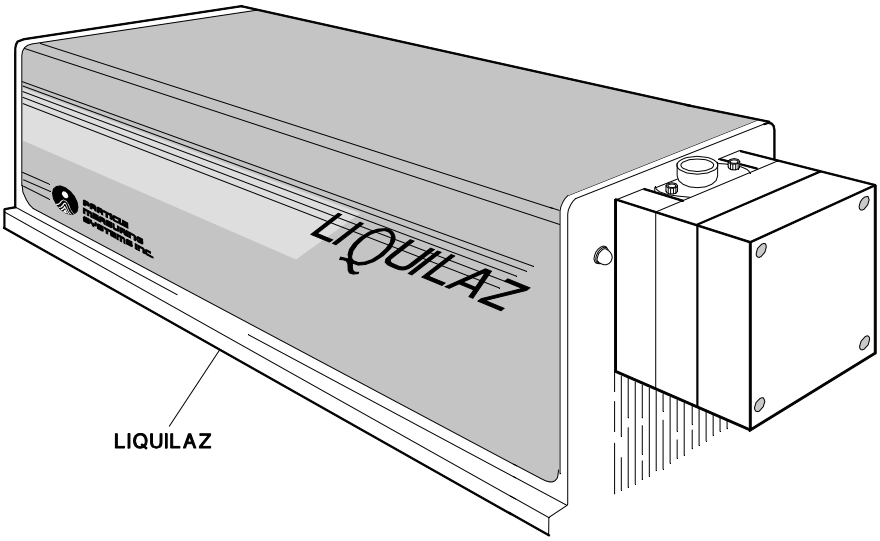

Figure 1-1: LiQuilaz-S Liquid Particle Counter

Artisan Technology Group - Quality Instrumentation ... Guaranteed | (888) 88-SOURCE | www.artisantg.com

Specifications

LiQuilaz-S liquid particle counter models	SO2	SO3	SO5
Size range	0.2–2.0 µm	0.3–3.0 µm	0.5 –20.0 µm
Size channels	15		
Flow rate (mL/min.)	50 ±10%	80 ±10%	80 ±10%
Volume sampled	100%		
Maximum concentration[a]	10,000 per mL		
Sample temperature[b]	0–150°C		
Zero count level	≤ 25 counts per liter	≤ 15 counts per liter	≤ 15 counts per liter
Maximum psi	100		
Laser source	Diode laser		
Wetted surface materials	Sapphire, Teflon®, Kalrez® 4079, or Kel-F®		
Dimensions (l, w, h)	12.75 × 4.25 × 4.5 inches (32.4 × 10.8 × 11.4 cm)		
Weight	6.1 pounds (2.8 kg)		
Power	85–132 V, 50–60 Hz 220-240V, 50-60 Hz		
Fuses	85–132 VAC: 0.75 Amp, 3 AG SB/250 V 220–240 VAC: 0.63 Amp, T5 x 20 mm 250 V		
Communications	RS-485		
Calibration fluid	DI water		
Calibration	Materials used are traceable to USA NIST and/or Japanese Industrial Standards (JIS).		
Environment	Temperature: 10– 35°C Humidity: non-condensing		

a. Greater than 90% accuracy (less than 10% coincidence loss) at maximum recommended concenation
b. 100°C for sulfuric acid

Artisan Technology Group - Quality Instrumentation ... Guaranteed | (888) 88-SOURCE | www.artisantg.com

Chapter 2
Unpacking and Installation

Unpacking

To unpack your shipment

1. Open the container.
2. Carefully remove the instrument and inspect it for damage.
3. If the instrument has been damaged in shipment, notify the shipper and Particle Measuring Systems. Repackage the instrument in the original packing materials.
4. If the instrument is not damaged, store the packing materials.

Identifying Components and Connections

Liquid Connections

The liquid connections to the LiQuilaz-S liquid particle counter are made through either the 3 mm connections directly on the sensor or through the Flaretek® connections on the interface bracket. Refer to Figure 2-1, “LiQuilaz-S Liquid Particle Counter (Front View).” Sensors configured to operate with samplers will typically utilize 3 mm tubing. Sensors configured to operate online will typically utilize 1/4” (6 mm) Flaretek fittings.

Indicator Lights

An activity light is located on the front panel next to the liquid connections. The LED is illuminated upon detection of each particle, interrogation of the sensor, and failure of the laser. This indicator is used to easily verify proper operation of the unit.

Artisan Technology Group - Quality Instrumentation ... Guaranteed | (888) 88-SOURCE | www.artisantg.com

Figure 2-1: LiQuilaz-S Liquid Particle Counter (Front View)

Artisan Technology Group - Quality Instrumentation ... Guaranteed | (888) 88-SOURCE | www.artisantg.com

Communications Connectors

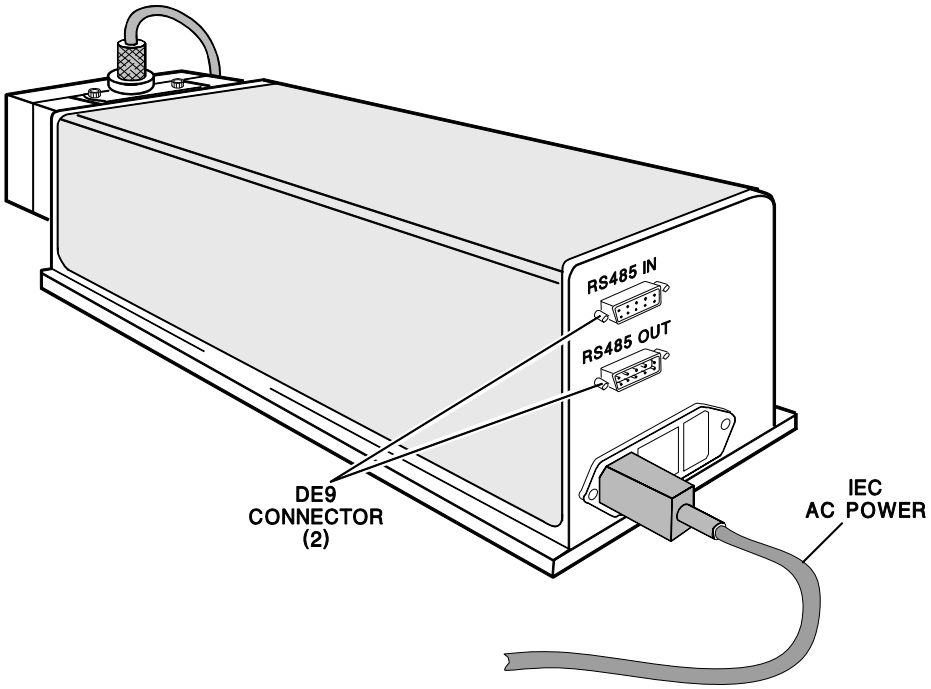

Figure 2-2: LiQuilaz-S Liquid Particle Counter (Rear Panel)

Two DE9 (female and male) connectors on the rear panel allow connection to the data display system. When one is used, the other is available for daisy chain connection to other sensors on the network.

A standard IEC AC power entry module, with a power switch, is located on this panel.

Artisan Technology Group - Quality Instrumentation ... Guaranteed | (888) 88-SOURCE | www.artisantg.com

Installation Requirements

Power	85–132 VAC, 50–60 Hz or 220-240 VAC, 50-60 Hz
Data cable	5 wire RS-485 (DE9) Pin 1 shield Pin 2 Tx + Pin 3 Tx - Pin 4 Rx + Pin 5 Rx - Pin 6 sample + Pin 8 sample –
Liquid connections	3 mm zero dead volume fitting or 1/4-inch Flaretek

AC Fuse

The fuse drawer in the sensor's power entry module permits the use of either of two types of fuse, depending on the line voltage.

To replace a fuse

1. Unplug the power cord from rear panel of the LiQuilaz-S liquid particle counter.
2. Use a small blade screwdriver, or similar tool, to remove the cover/fuse drawer from the power entry module (located on the instrument rear panel).
3. Choose the proper fuse according to the table below.

85–132 VAC	0.75 Amp 3 AG SB/250 V
220–250 VAC	0.63 Amp T5 x 20 mm 250 V

4. Reinstall the cover/fuse drawer assembly.

Artisan Technology Group - Quality Instrumentation ... Guaranteed | (888) 88-SOURCE | www.artisantg.com

Installation

To install the particle sensor

1. Connect a standard IEC AC power cord to the rear panel power module (Figure 2-2).
2. Connect the DE9 data cable between the sensor and the data display system.

> **NOTE:** If more than one sensor is to be connected to the data display system, they can be daisy chained through this sensor.
> If connection to an RS-232 communications port is to be made, it is necessary to use an RS-232 to RS-485 converter in this line.

3. Connect the liquid supply line to the appropriate connector on the front of the sensor.

> **NOTE:** Although there is no directional requirement by the sensor for flow, Particle Measuring Systems recommends that the flow travel into the bottom connection and out of the top connection. This will help prevent bubbles from becoming trapped in the sample cell by the fluid flow.

Artisan Technology Group - Quality Instrumentation ... Guaranteed | (888) 88-SOURCE | www.artisantg.com

This page is intentionally left blank

Artisan Technology Group - Quality Instrumentation ... Guaranteed | (888) 88-SOURCE | www.artisantg.com

Appendix A
Capillary Cleaning

This is a basic guide to maintenance for LiQuilaz liquid particle counters. Occasional cleaning is required of the liquid capillary and it is the customer's responsibility to perform the cleaning when necessary. The need for capillary cleaning and the general health of the capillary can be improved by continuously running water through the system when not in use. In addition, the capillary should never be allowed to dry out as this could permanently damage the capillary.

Cleaning the Capillary

To clean the liquid capillary using syringes

WARNING
Before removing the LiQuilaz liquid particle counter from a CLS-700 sampler, make sure the sample inlet and outlet tubes are first connected together, or directed into an appropriate drain. Failure to do so could result in severe personal injury, as water from the sampler will be forced out of the open tubing under pressure.

1. Isolate the LiQuilaz liquid particle counter from its fluid source.
2. Disconnect the fluid inlet and outlet fittings from the LiQuilaz liquid particle counter.

CAUTION
Do NOT remove the 4-40 socket head screws from the fittings. Doing so will compromise the capillary seal and result in fluid leaking onto circuit boards and extensive damage. Only remove 3mm zero dead volume fittings from the inlet/outlet connections.

3. Select an appropriate cleaning solution.

Artisan Technology Group - Quality Instrumentation ... Guaranteed | (888) 88-SOURCE | www.artisantg.com

NOTE: When selecting an appropriate cleaning solution, consider the types of contamination that will have deposited onto the capillary from the most recent fluid sampled. For instance, if DI water was sampled last, bacteria, or particles are the most likely sources of contamination. If solvents were sampled last, optical hazing due to chemical impurities is most likely. Both of these situations can be easily remedied using high-quality laboratory glassware cleaner such Micro-90® or Radiacwash™. A 5% solution of glassware cleaner in ultra-pure DI water should be used.

4 Fill each cleaning syringe with 5ml of cleaning solution.

5 Attach one cleaning syringe to the particle counter inlet, and the other to particle counter outlet.

6 Force the cleaning fluid back and forth between the two syringes for 30 seconds to one minute.

7 Remove syringes, being careful not to spill fluid into gaps between metal sections of particle counter housing. Immediately wipe up any spills.

8 Connect the LiQuilaz liquid particle counter inlet to a source of ultra-pure deionized water. Direct the LiQuilaz liquid particle counter outlet to a drain suitable for the cleaning fluid. Flush the cleaning fluid from particle counter for 3-5 minutes with DI water.

9 Check the DC light using the provided software. If the DC light fails to meet the following sensor specifications, repeat cleaning with syringes until successful.

DC Light Specifications	
LiQuilaz-S liquid particle counter, model S02	< 0.5 volts
LiQuilaz-S liquid particle counter, model S03/S05	< 0.03 volts
LiQuilaz-S liquid particle counter, model E20P	> 7 volts

10 If a series of cleaning attempts is unsuccessful in cleaning the syringe, follow the cleaning procedure in “Applying Additional Capillary Cleaning Techniques” or return the LiQuilaz liquid particle counter to Particle Measuring Systems Service Department.

Applying Additional Capillary Cleaning Techniques

In cases where polymers were sampled, the most likely cause of contamination is trace polymer dried to the capillary. In this case, the polymer will probably require long term soaking in the appropriate solvent to facilitate removal of the contaminant.

Artisan Technology Group - Quality Instrumentation ... Guaranteed | (888) 88-SOURCE | www.artisantg.com

Using the solvent with the cleaning syringes after soaking (assuming compatibility), should dislodge the residual contamination. Follow this with a DI flush, and, if necessary, additional cleaning with a glassware cleaner.

Sometimes the source of contamination is aggressively attached to the surface of the capillary. When these rare events occur, using cleaning syringes will not be sufficiently effective to return the DC light value to acceptable limits. Under these situations, using a product called Super Floss® manufactured by Oral-B®, can sometimes dislodge the contamination.

CAUTION

Do NOT use floss on the LiQuilaz E20P particle counter. Floss will damage the capillary on this unit.

To clean the liquid capillary using floss

Follow these steps ONLY after an unsuccessful series of attempts to clean the capillary with the syringes.

1. If necessary, remove the 3 mm fittings from the LiQuilaz liquid particle counter inlet and outlet fittings.
2. Remove a single strand of Super Floss from its package.

NOTE: Do not use flavored (mint or other) floss as it can leave a film on the capillary instead of cleaning it.

3. Identify the un-waxed end of the Super Floss, and insert it through the capillary.

CAUTION

One end of the Super Floss is stiffened with wax, while the other is only compressed into stiff dental floss. Never pass the waxed end through the capillary.

4. As the spongy section of the Super Floss reaches the capillary, wet it lightly with cleaning solution.

CAUTION

Be very careful not to spill any fluid onto the gaps between the metal sections of the LiQuilaz housing. Immediately wipe up any spills.

Artisan Technology Group - Quality Instrumentation ... Guaranteed | (888) 88-SOURCE | www.artisantg.com

NOTE: When selecting an appropriate cleaning solution, consider the types of contamination that will have deposited onto the capillary from the most recent fluid sampled. For instance, if DI water was sampled last, bacteria, or particles are the most likely sources of contamination. If solvents were sampled last, optical hazing due to chemical impurities is most likely. Both of these situations can be easily remedied using high-quality laboratory glassware cleaner such Micro-90 or Radiacwash. A 5% solution of glassware cleaner in ultra-pure DI water should be used.

5 Gently pull the wetted portion of the Super Floss back and forth through the capillary for 10-15 seconds.

NOTE: The best technique is to pull on one end of the Super Floss without holding onto the other end. Then, release the side you were pulling, and begin pulling from the other end. This will allow the floss to remain large and spongy as it travels through the capillary, contacting all surfaces of the capillary.

6 After 10-15 seconds of flossing action, remove the Super Floss from the capillary. Remember to remove the floss from the same direction that it was inserted. Do NOT pull the waxed-end through the capillary.

7 Connect the LiQuilaz liquid particle counter inlet to a source of ultra-pure, deionized water.

8 Direct the LiQuilaz liquid particle counter outlet to a drain suitable for cleaning fluid.

9 Flush cleaning fluid from the LiQuilaz liquid particle counter with DI water for 3-5 minutes.

10 Check the DC light using the provided software. If the DC light fails to meet the following sensor specifications, repeat cleaning with one additional strand of Super Floss. If the light still does not meet sensor specifications, return the LiQuilaz liquid particle counter to Particle Measuring Systems Service Department.

DC Light Specifications	
LiQuilaz-S liquid particle counter, model S02	< 0.5 volts
LiQuilaz-S liquid particle counter, model S03/S05	< 0.03 volts
LiQuilaz-S liquid particle counter, model E20P	> 7 volts

Artisan Technology Group - Quality Instrumentation ... Guaranteed | (888) 88-SOURCE | www.artisantg.com

Appendix B
Communication Protocol

The LiQuilaz-S liquid particle counter is a “smart” sensor designed to measure particles in liquids. To accommodate Fast histogram displays and remote data collection functions, the particle counter supports both the Fast and Slow communication protocols. A description of the protocols are covered in the following sections.

The following is a presentation of typical command sequences for specific operations. The operations may be one-time command sequences (i.e., instrument initialization) or command sequences that need to be performed repeatedly (i.e., polling for data). A detailed explanation of each command is contained in the protocol section.

Instrument Initialization

The following command sequence is typical during initialization or re-initialization of the instrument:

CSR CDT CMODE

This sequence performs a software reset, sets the current date/time into the instrument, and sets the instrument into the correct operational mode.

NOTE: The operational mode should be set to 1 for regular time-based operation. If the mode is set to other than 1, it is assumed the sensor is attached to a LS-200 sampler. Sampler operation is not covered in this document.

Sample Initiate

The following command sequence is typical when starting the instrument:

CSI CSIZE CSS

This sequence sets the desired sample interval, sets the channel size values, and starts the LiQuilaz-S liquid particle counter sampling.

Artisan Technology Group - Quality Instrumentation ... Guaranteed | (888) 88-SOURCE | www.artisantg.com

Data Processing

The LiQuilaz-S liquid particle counter can be polled for data in two ways. The first uses what is referred to as *Slow* protocol (which is how all the regular commands are transmitted). The second is what is referred to as *Fast* protocol. The term *Fast* refers to the ability to get data as a sample is created, not after a sample is completed. It should be noted that a combination of *Slow* and *Fast* data polling is allowed.

Slow Polling

The following sequence is typical for a Slow data poll:

Once the LiQuilaz-S liquid particle counter has started sampling, the user needs to poll the instrument to check its data queue. This is performed by transmitting the CQC command. The instrument responds with a RQC and two values. If the first value is -1, the instrument is not sampling and needs to be re-initialized and started as outlined in Instrument Initialization and Sample Initiate sections. If the instrument responds with a value of 0, then there is no data at this time — send another CQC command. If the instrument responds with a value of 1 or greater, data is present. The user now must transmit the CTD command to receive the stored data. If the data is received with no problems, the user should issue the CPQ command to “pop” the data off of the LiQuilaz-S liquid particle counter data queue. If the data is not received correctly, the CTD command can be reissued. This procedure can now be repeated until the user no longer wishes to receive sample data. The second value reported by the sensor with the RQC response represents its sampling status (1=Sampling).

NOTE: The CQC command is typically transmitted to the instrument at twice the sample interval.
The LiQuilaz-S liquid particle counter will respond with a value of -1 to a CQC command only after a software reset has occurred. A software reset can occur due to power-up, a CSR command from the user, or an error detected by the watch-dog interrupt.

Artisan Technology Group - Quality Instrumentation ... Guaranteed | (888) 88-SOURCE | www.artisantg.com

Fast Polling

The logical sequence of events while performing the Fast data poll is identical to those for the Slow data poll with the following exceptions:

The address of the instrument, logically combined with the value 80Hex, is transmitted instead of the CQC command. The response to the Fast poll command contains the status (sampling or not), the queue count, and the sample data at this point in the sample. The queue count is used just like it was used in the Slow data poll procedure.

NOTE: The Fast poll command is not typically transmitted any faster than 3 times per second.

Slow Protocol

The general communication procedure in the Slow protocol has what is called a command/response sequence. For each command directed to a LiQuilaz-S liquid particle counter, there is a response generated by the particle counter. The format of the response depends on the particular command. (See “Slow Protocol Commands” for a complete listing of the LiQuilaz-S liquid particle counter commands.) These commands and responses are formatted and packeted to ensure error free communication. The formatting and packeting process is discussed in the following paragraphs.

The process of building a packet can be divided into three logical steps shown below.

In the first step the address of the node is added to the beginning of the data, and a checksum is added to the end of the data. This produces the following un-formatted data structure.

ADDRESS HIGH BYTE|ADDRESS LOW BYTE|FIRST DATA BYTE|SECOND DATA BYTE|...|LAST DATA BYTE|CHECKSUM HIGH BYTE|CHECKSUM LOW BYTE

NOTE: “|” is used for readability and does not exist in the actual data packet.

NOTE: CHECKSUM is a 16 bit unsigned integer sum of the un-formatted data including the address with the carry bit ignored if an overflow occurs during the calculation. The STX and ETX are not included in the check sum.

Artisan Technology Group - Quality Instrumentation ... Guaranteed | (888) 88-SOURCE | www.artisantg.com

The second step minimizes difficulties when the network includes devices such as modems. Only visible ASCII characters (32–126), with the exception of the packet delimiting STX and ETX, are transmitted on the network. The non-visible characters and non-ASCII characters are run through the conversion formula shown below before they are transmitted.

The STX and ETX are used as packet delimiters. They are not visible characters but do not cause problems as the NUL, DEL, and other 8-bit data characters can.

Value of Byte		**Character(s) transmitted i.e. byte 1H, byte 2H**
byte	<20H	7BH, byte + 20H
7B	<=byte <80H	7CH, byte - 5BH
80H	<= byte <COH	7DH, byte - 60H
COH	<= byte	7EH, byte - AOH
otherwise		byte

The following is an example of what a typical command and response packet should look like at this point in the formatting and packeting process:

Command -> CQC

Response -> RQC

This particular LiQuilaz liquid particle counter has an address of 1.

Command transmitted to LiQuilaz liquid particle counter:

ASCII	->	{ {!CQC{ ->8
Hex	->	7B207B214351437B207E38

Response transmitted by the LiQuilaz liquid particle counter:

ASCII	->	{ {!RQC -1 0 {!}U
Hex	->	7B207B21525143202D3120307B217D55

The third step is to preface the ASCII packet formed in the second step with a ASCII STX character and terminate it with an ASCII ETX character (STX = 2, ETX = 3).

Artisan Technology Group - Quality Instrumentation ... Guaranteed | (888) 88-SOURCE | www.artisantg.com

The system transmission parameters are listed below.

Baud Rate	9600
Parity	one
Bit Transmitted	8
Stop Bits	1

Artisan Technology Group - Quality Instrumentation ... Guaranteed | (888) 88-SOURCE | www.artisantg.com

Slow Protocol Commands

Command	Response	Purpose
NOTE: Commands are case sensitive		
CMODE n	RMODE	Select time based or sample based sampling mode
CSI n	RSI	Set the sample interval, in seconds, for the time based mode
CDT ...	RDT	Set date and time.
CTD	RTD ...	Transmit a data report.
CPQ	RPQ	Remove the oldest record from queue.
CFQ	RFQ	Delete all un-transmitted reports.
CQC	RQC n s	Returns the number of reports on the transmission queue and sampling status.
CSR	RSR	Software reset.
CSS	RSS	Start time based sampling mode.
CTS	RTS	Terminate current sample and stop sampling.
CVER	RVER ...	Request LiQuilaz software version.
CSATH ...	RSATH n	Set absolute PHA thresholds.
CRATH	RRATH ...	Read absolute PHA thresholds.
CSPHA ...	RSPHA n	Set the PHA parameters.
CRPHA	RRPHA ...	Read PHA parameters
CLG	RLG	Set LiQuilaz to read low gain channel only.
CSIZE ...	RSIZE n	Set channel sizes
CRSIZE	RRSIZE ...	Read channel sizes
CSTAB ...	RSTAB n	Set table values.
CRTAB	RRTAB	Read table values.
CADDRESS n	RADDRESS n	Set instrument address.

Artisan Technology Group - Quality Instrumentation ... Guaranteed | (888) 88-SOURCE | www.artisantg.com

Commands and Responses

CMODE n	Selects either time-based sampling for in-situ applications, or sampler based sampling. When n is 1 time-based mode is selected, when n is other than 1 sampler-based sampling is selected. The default is time-based sampling. In sampler-based mode, the LiQuilaz liquid particle counter will begin a sample and accumulate counts whenever the hardware sampling control line is asserted. A sample is ended in this mode when the hardware sampling-control line is un-asserted. In time-based mode, the LiQuilaz liquid particle counter will continuously collect samples whose duration is set with the CSI command. The sample process is initiated by issuing a CSS command.
CSI n	Selects the sample interval, in seconds, for time-based sampling. 0 < n < 85899345
CDT yyyy/mm/dd| hh:mm:ss	Sets date and time for the LiQuilaz liquid particle counter. If the instrument is sampling when this command is issued the sample will be aborted and the particle counter will stop sampling.
CTD	Causes the report currently on the top of the transmission queue to be transmitted. The detailed format of the report is shown below. (Note this is the un-formatted data report.)

<STX>	Begin report flag. The STX character is 2.
ADDRESS	Address of responding LiQuilaz liquid particle counter. Range between 1 and 99.
RTD <LF> TI hh:mm:ss <LF>	Time the data was taken. This is the start of the sample interval.
DA yy/mm/dd <LF>	Date the sample was taken.
NC n <LF>	Number of channels. o < n < 31.
SI n.n <LF>	Length of the sample interval. The sample interval will be between 0.0 and 85899345.49.
L0 n <LF>	bit n.1=Laser Status 1= Laser Good | Status 0= Laser Bad bit n.2=Not Used bit n.3=Flow Rate 1= Flow Rate Good | Flow Rate 0= Flow Rate Bad bit n.4=Not Used

Artisan Technology Group - Quality Instrumentation ... Guaranteed | (888) 88-SOURCE | www.artisantg.com

	bit n.5=Not Used
	bit n.6=Not Used
	bit n.7=Not Used
	bit n.8=Not Used
	NOTE: The bit n.3 is only valid in the time based mode. The bit n.3 is the sample signal line for the sample based mode.
DC n <LF>	D.C. light voltage. The max voltage is 10 volts. 0 < n < 4095; 10 volts corresponds to 4095.
1 n <LF>	Smallest channel particle count. 0 < n < 4294967295
2 n <LF>	0 < n < 4294967295
3 n <LF>	0 < n < 4294967295
. <	
.	
.	
nc n <LF>	Largest channel particle count. 0 < nc < 32; 0 < n < 4294967295
CHKSUM <LF>	Check sum of the data packet. 0 <= CHKSUM <= 65536
<EXT>	The ETX character is 3.

Channel 1 is the channel with the smallest size threshold (i.e., smallest particle bin).

CPQ	**Pop Queue**: Causes the report currently on the top of the transmission-queue to be discarded, for example: the oldest record is deleted. This command does not disturb the sampling process.
CFQ	**Flush queue**: Discards all reports on the transmission-queue if not sampling.
CQC	**Queue Count**: Returns the number of reports on the transmission queue and the sampling status (1= sampling).
CSR	**Software reset**: The system does its best to simulate a hardware reset, typically by stopping keep-alive strobes to a hardware watchdog device. The RSR response will be transmitted **after** the LiQuilaz liquid particle counter has reset.

Artisan Technology Group - Quality Instrumentation ... Guaranteed | (888) 88-SOURCE | www.artisantg.com

CSS	**Start sampling**: causes the LiQuilaz liquid particle counter to begin continuous time-base sampling. When the particle counter is in sampler mode, this command has no effect. If the instrument is currently sampling it will abort the sample and start a new sample.
CTS	**Terminate sampling**: causes the particle counter to stop continuous time-mode sampling and return to the idle state. This command has no effect during Sampler mode.
CVER	The LiQuilaz liquid particle counter will return the revision number of the software currently running in response to this command. This version can be a string of up to 200 characters in this format RVER LiQuilaz-S, Version 3.0 07-06-94
CSATH nc n1 n2 n3 ... n(nc)	Set absolute PHA thresholds. The first number (nc) is the number of thresholds to be programmed. Following the numbers are nc addresses which represent the RAM location boundaries of the channels. For example, channel 1 runs from n1 to n2, channel 2 runs from n2 to n3 and the last channel is all locations greater than n(nc). The maximum values for nc and n? are 31 and 8191 respectively for the LiQuilaz liquid particle counter. The values are stored in battery backup RAM. The last values used will be the default values on power up. Returns 1 if values accepted or 0 if sampling or values out of range.
CRATH	Read absolute PHA thresholds. The response is RRATH nc 1 2 3 ... nc. The first number (nc) is the number of thresholds that are currently programmed. Following the numbers are nc addresses which represent the RAM location boundaries of the channels. For example, channel 1 runs from n1 to n2, channel 2 runs from n2 to n3 and the last channel is all locations greater than n(nc). The maximum values for nc and n? are 31 and 8191 respectively for the LiQuilaz liquid particle counter.
CSPHA ...	Stores the current state of the PHA. The values are stored in battery backup RAM. The last values used will be the default values on power up. The response to the command is RSPHA n. Where n=1 is a valid state of the PHA and n=0 is an invalid state. The detailed format of the command is as follows.

Format for Calibration String

The following calibration information will be downloaded and uploaded as an ASCII string in the LiQuilaz liquid particle counter.

Date	<MM/DD/YY>
Time	<HH:MM:SS>
Gain	(double)
No. Size/SST pairs	(int)

Artisan Technology Group - Quality Instrumentation ... Guaranteed | (888) 88-SOURCE | www.artisantg.com

Pairs of Size/SST Combinations

Size	(double)
SST	(int)
High Gain Offset	(int)
Low Gain Offset	(int)
Size Checksum	(double)
SST Checksum	(double)

Each token within the string is separated by spaces (character 0 x 20), and the string is null terminated.

Date Time # Size/SST Pairs

```
CSPHA 08/01/95 12:00:00 104.00 5 0.203 140 0.343 2250 0.597 4400 1.040 5000 1.635 6500
```

Gain

Pairs of Size/SST Combinations

HIGH GAIN OFFSET SST CHECKSUM

CONTINUED 3900 4190 3.81 8000 18290.000000

SIZE CHECKSUM

LOW GAIN OFFSET

Example: Command -> CSPHA 08/01/95 12:00:00 104.00 5 0.203 140 0.343 2250 0.597 4400 1.040 5000 1.635 6500 3900 4190 3.81 8000 18290.000000 Response -> RSPHA 1

CRPHA	Returns the current state of the PHA. The format is as follows: CRPHA 08/01/95 12:00:00 104.00 5 0.203 140 0.343 2250 0.597 4400 1.040 5000 1.635 6500 3900 4190 3.81 8000 18290.000000
CLG	Restricts the LiQuilaz liquid particle counter to measuring particles in its low gain analog section.

Artisan Technology Group - Quality Instrumentation ... Guaranteed | (888) 88-SOURCE | www.artisantg.com

CSIZE nc n1 n2 n3 ... n(nc)	Set channel sizes. The first number (nc) is the number of sizes to be used. There are then nc actual sizes to set. Returns 1 if sizes are acceptable or 0 if sampling or the sizes are incorrect. Only available in Version 3.0 or later.
CRSIZE	Read channel sizes. The response is RRSIZE nc n1 n2 n3 ... n(nc); where n is a channel size. This will yield data only if the channel sizes were set via the CSIZE command. Only available in Version 3.0 or later.
CSTAB nc a1 b1 a2 b2 ... a(nc) b(nc)	Set table values. The first number (nc) is the number of table entries. There are then nc actual table entry pairs. Each pair of values represents size * 1000 and a corresponding threshold value. Returns 1 if entries are acceptable or 0 if sampling or the entries are incorrect. Only available in Version 3.0 or later.
CRTAB	Read table values. The response is RRTAB nc a1 b1 a2 b2 ... a(nc) b(nc); where a is a channel size * 1000 and b is a threshold value. This will yield data only if the table values were set via the CSTAB command. Only available in Version 3.0 or later.
CADDRESS n	Set instrument Address. 0 < n < 99. Instrument will respond with RADDRESS n at original address. Only available in Version 3.0 or later.

Each device will respond with the STX character of a response within a device specific time, approximately 4 seconds or less, if no response is received within this time, a time-out fault condition should be assumed by the host computer.

Fast Protocol

The Fast communication protocol allows the Data Display System to acquire the most recent data for the sample in progress. This mode operates concurrently with, and independently from, the Slow mode. To initiate a Fast pole, the Data Display System need only transmit the address of the desired device. The address of a device that supports the Fast communication mode is the same as the address of the Slow mode, except that the most significant bit of the address will be set (example: If the device's network address is 1, the Fast mode address is 129).

The following information is transmitted back to the Data Display System per each poll:

1) ADDRESS	This is a one byte device address.
2) SAMPLE_INTERVAL	This is a 4 byte unsigned number that represents the time elapsed since the start of the sample. (56th of a second)
3) LASER/FLOW STATUS	bit n.1=Laser Status 1=Laser Good Laser Status 0=Laser Bad bit n.2=Not Used

Artisan Technology Group - Quality Instrumentation ... Guaranteed | (888) 88-SOURCE | www.artisantg.com

	bit n.3=Flow Rate 1=Flow Rate Good Flow Rate 0=Flow Rate Bad bit n.4=Not Used bit n.5=Not Used bit n.6=Not Used bit n.7=Not Used bit n.8=Not Used NOTE: The bit n.3 is only valid in the time based mode. The bit n.3 is the sample signal line for the sample based mode.
4) SAMPLE_STATUS	Time base mode only: This is a 1 byte sample status. The most significant bit represents the sampling status (i.e., 1 = Sampling, 0 = Not Sampling). The low 7 bits represents the Queue Count. The Queue Count in the Slow and Fast protocols are identical. Sampler base mode: Status=1→ Sampling Status=0→ Not Sampling
5) DC_LIGHT	A 2-byte unsigned number which represents the DC light voltage in steps of 2.44mv/bit (i.e., 4096 = 10 volts).
6) NUMBER_CHANNELS	A 1-byte number which represents the number of channels currently programmed into the device.
7) unsigned long CHANNELn	A 4-byte number which represents the number of particles found in the nth channel. CHANNEL 1 is the channel with the smallest size threshold. Each channel is an unsigned long counter. If the device is programmed to have n = 16 channels, a total of 64 bytes can be expected back in this field. For details, see the examples on pages A-13, A-14 and A-15.
8) CHECK_SUM	A 2-byte number which value is the sum of all the bytes in the “un-formatted data packet” with the exception of the STX, ETX and checksum itself. The carry bit in the addition is ignored. It is transmitted as Low Byte, High Byte.

Artisan Technology Group - Quality Instrumentation ... Guaranteed | (888) 88-SOURCE | www.artisantg.com

Formatting Data

The data is in straight binary format with an STX at the start of the packet and an ETX at the end. Since the STX, and the ETX may be valid values in the actual data, the following algorithm must be used to prevent confusion between data in the packet and delimiting characters:

Format Algorithm:

packet = STX B1 B2 ... BK ... BN ETX
if Bk equals STX, ETX or FF(hex)

transmit FF(HEX)

transmit Bk exored with 80(hex)

else

transmit Bk

Since the node does not respond to any commands other than those sent to its address, the host computer will initiate a Fast protocol transmission by sending a single 8-bit address character on the network. The lower 7 bits of this character will have a value between 0 and 99 that will correspond to the main network address of the node. The upper (most significant) bit of the address character will be a 1 to indicate that a Fast protocol response is being requested. After the node recognizes its address, it will respond with the following report with each line describing a single character. Note that this is the packet before it is sent to the format algorithm (i.e. this is the un-formatted packet).

<<STX>>

ADDRESS

SI.4

SI.3

SI.2

SI.1

LASER/FLOW STATUS

SAMPLE_STATUS

DC_LIGHT.2

DC_LIGHT.1

NUMBER_CHANNELS

CHANNEL1.4

CHANNEL1.3

Artisan Technology Group - Quality Instrumentation ... Guaranteed | (888) 88-SOURCE | www.artisantg.com

CHANNEL1.2

CHANNEL1.1

CHANNEL2.4

CHANNEL2.3

CHANNEL2.2

CHANNEL2.1

CHANNEL3.4

CHANNEL3.3

CHANNEL3.2

CHANNEL3.1

.

.

.

CHANNELn.4

CHANNELn.3

CHANNELn.2

CHANNELn.1

CHECK_SUM.2

CHECK_SUM.1

<<ETX>>

CHANNEL 1 is the channel with the smallest size threshold. CHECK_SUM is a 16 bit unsigned summation of all bytes. The STX and ETX characters are not included in the checksum. The carry-bit is ignored if overflow occurs during the calculation of the checksum.

Each device responds with the STX character of a report within approximately 1 second of the receipt of its address. If no response is received within this time a time-out fault condition should be assumed by the host computer.

Example:

NOTE: All numbers are in hexadecimal.

Artisan Technology Group - Quality Instrumentation ... Guaranteed | (888) 88-SOURCE | www.artisantg.com

Address transmitted by Data Display System -> 81
Response from LiQuilaz-S->
0281000000000100FF7F000F0000000000000000000000000000000000000000
0000000000000000000900103

Response Legend

STX	-> 02	
ADDRESS	-> 81	
SAMPLE_INTERVAL	-> 00000000	
LASER/FLOW STATUS	-> 01	
SAMPLE_STATUS	-> 00	
DC_LIGHT	-> FF7F00	= 00FFHEX
NUMBER_CHANNELS	-> 0F	
CHANNEL1	-> 00000000	
CHANNEL2	-> 00000000	
CHANNEL3	-> 00000000	
CHANNEL4	-> 00000000	
CHANNEL5	-> 00000000	
CHANNEL6	-> 00000000	
CHANNEL7	-> 00000000	
CHANNEL8	-> 00000000	
CHANNEL9	-> 00000000	
CHANNEL10	-> 00000000	
CHANNEL11	-> 00000000	
CHANNEL12	-> 00000000	
CHANNEL13	-> 00000000	
CHANNEL14	-> 00000000	
CHANNEL15	-> 00000000	
CHECKSUM	-> 9001	= 190 HEX
ETX	-> 03	

Artisan Technology Group - Quality Instrumentation ... Guaranteed | (888) 88-SOURCE | www.artisantg.com

This page is intentionally left blank.

Artisan Technology Group - Quality Instrumentation ... Guaranteed | (888) 88-SOURCE | www.artisantg.com

Appendix C
International Precautions

WARNING

This instrument is a Class I laser product. Use of controls, or adjustment, or performance of procedures other than those specified here may result in hazardous radiation exposure.

AVERTISSEMENT

Cet instrument contient un laser de Classe 1. L'usage de moyens ou procédures, ou la pratique de certains réglages autres que ceux prévus dans ce manuel peuvent entrainer des risques d'exposition aux radiations laser.

WARNUNG

Das Gerat ist ein Laser der Klasse 1. Werden Einstellungen vorgenommen oder Verfahren eingesetzt, die nicht in dieser Bedienungsanleitung beschrieben sind, kann es zu gefahrlicher Strahlung kommen.

ATTENZIONE

Questo strumento e nella classe 1 dei prodotti laser. Fare controlli o calibrazioni e seguire procedure diverse da quelle specificate in questo manuale, pu provocare esposizione a radiazioni pericolose.

PRECAUSION

Este equipo es un producto laser de Clase I. La utilización de controles, ajustes o procesos diferentes de los especificados aquí, pueden dar lugar a exposiciones a radiaciones peligrosas.

Artisan Technology Group - Quality Instrumentation ... Guaranteed | (888) 88-SOURCE | www.artisantg.com

Hazard Symbols

The meaning of hazard symbols appearing on the equipment is as follows:

Symbol	Nature of Hazard
	Attention, consult accompanying documents.
	Dangerous High Voltage
	Static Sensitive Components

Symboles de risque

Des symboles représentant les risques sont placés sur l'appareil. Leur signification est la suivante:

Symbole	Nature du risque
	Attention, consulter les documents d’accompagnement.
	Danger Electricite
	Composants Sensibles a L'Electricite Statique

Artisan Technology Group - Quality Instrumentation ... Guaranteed | (888) 88-SOURCE | www.artisantg.com

Warnschilder

Die, an dem Gerat angebrachten Warnschilder haben folgende Bedeutungen:

Symbol	Gefahrenart
	Achtung! In den beiliegenden Unterlagen nachschlagen.
	Achtung Hochspannung
	Statisch empfindliche Bauteile

Simboli di pericolo

Il significato dei simboli di pericolo che appaiono sugli strumenti il seguente:

Simbolo	Natura del pericolo
	Attenzione. Consultare i documenti allegati.
	Tensione Pericolosa
	Componenti sensibili a campi elettrostatici

Artisan Technology Group - Quality Instrumentation ... Guaranteed | (888) 88-SOURCE | www.artisantg.com

Simbolos de peligro

Los simbolos de peligro que aparecen en el equipo significan:

Símbolo	Naturaleza del Peligro
	Atención, consultar los documentos adjuntos.
	Peligro alto voltaje.

Artisan Technology Group - Quality Instrumentation ... Guaranteed | (888) 88-SOURCE | www.artisantg.com

Appendix D
有毒或有害的物质和元素

Part Name 部件名称	有毒或有害的物质和元素					
	铅 (Pb)	汞 (Hg)	镉 (Cd)	六价铬 (Cr(VI))	多溴联苯 (PBB)	多溴联苯醚 (PBDE)
电源供应	x	o	x	o	x	x
印刷电路装配	x	o	x	o	x	x
光学元件	x	o	x	o	x	x
激光	x	o	x	o	o	o
机械部件	x	o	x	x	x	x
电缆	x	o	x	o	x	x
机电	x	o	x	x	x	x

O: 表示用于部件的所有同族物质中所含的有毒或有害物质低于SJ/T11363-2006规定的限度要求。
X: 表示用于部件的至少一种同族物质中所含的有毒或有害物质高于SJ/T11363-2006规定的限度要求。

Artisan Technology Group - Quality Instrumentation ... Guaranteed | (888) 88-SOURCE | www.artisantg.com

:

Artisan Technology Group - Quality Instrumentation ... Guaranteed | (888) 88-SOURCE | www.artisantg.com

Index

A
AC Fusing 2-4
attenzione C-1
avertissement C-1

C
calibration 1-2
calibration fluid 1-2
commands B-7
communication protocol B-1
communications 1-2
components 2-1
connections 2-1
    liquid connections 2-1

D
daisy chaining 2-5
data processing B-2
DE9 connectors 2-3
Declaration of Conformity 1-iv
dimensions 1-2

E
environment 1-2

F
fast polling B-3
fast protocol B-11
flow rate 1-2
formatting data B-13
fuses 1-2, 2-4

I
indicator lights 2-1
installation 2-1, 2-4, 2-5
instrument initialization B-1
international precautions C-1

L
laser source 1-2
LED 2-1

M
manual conventions 1-iii
maximum concentration 1-2
maximum psi 1-2
multiple sensors 2-5

P
power 1-2

Q
quality 1-ii

R
RS-232 2-5
RS-485 2-5

S
sample initiate B-1
sample temperature 1-2
size channels 1-2
size range 1-2
slow polling B-2
slow protocol B-3
slow protocol commands B-6
specifications 1-2

U
unpacking 2-1

V
volume 1-2

W
warning C-1
warnung C-1
weight 1-2
wetted surface materials 1-2

Z
zero count level 1-2

Artisan Technology Group - Quality Instrumentation ... Guaranteed | (888) 88-SOURCE | www.artisantg.com

Artisan Technology Group - Quality Instrumentation ... Guaranteed | (888) 88-SOURCE | www.artisantg.com

Artisan Technology Group is an independent supplier of quality pre-owned equipment

Gold-standard solutions

Extend the life of your critical industrial, commercial, and military systems with our superior service and support.

We buy equipment

Planning to upgrade your current equipment? Have surplus equipment taking up shelf space? We'll give it a new home.

Learn more!

Visit us at **artisantg.com** for more info on price quotes, drivers, technical specifications, manuals, and documentation.

Artisan Scientific Corporation dba Artisan Technology Group is not an affiliate, representative, or authorized distributor for any manufacturer listed herein.

We're here to make your life easier. How can we help you today?

(217) 352-9330 | sales@artisantg.com | artisantg.com

ARTISAN® TECHNOLOGY GROUP