Allen-Bradley 800M-XAK

Standard Contact Blocks

Limited Availability
Used and in Excellent Condition

Open Web Page

https://www.artisantg.com/69589-2

ARTISAN TECHNOLOGY GROUP

Your **definitive** source for quality pre-owned equipment.

Artisan Technology Group
(217) 352-9330 | sales@artisantg.com | artisantg.com

All trademarks, brandnames, and brands appearing herein are the property of their respective owners.

- Critical and expedited services
- In stock / Ready-to-ship
- We buy your excess, underutilized, and idle equipment
- Full-service, independent repair center

Artisan Scientific Corporation dba Artisan Technology Group is not an affiliate, representative, or authorized distributor for any manufacturer listed herein.

30mm Push Button Selection Guide

Allen-Bradley

Rockwell Automation

Artisan Technology Group - Quality Instrumentation ... Guaranteed | (888) 88-SOURCE | www.artisantg.com

Time-Tested, Industry Proven

Innovative Designs. Time-Tested Durability. Reliable Products. These are the qualities that have made the Rockwell Automation Allen-Bradley brand the industrial market leader in push buttons. Allen-Bradley offers and supports the largest selection of 30mm operators in the world.

A Touch Above The Rest. Bold yet functional, rugged yet attractive, we bring the world's most innovative and unique push buttons and accessories to the market.

30mm Push Buttons and Enclosures...

- ***Quality***
- ***Design***
- ***Variety***
- ***Reliability***
- ***Value***
- ***Safety***
- ***Delivery***

Artisan Technology Group - Quality Instrumentation ... Guaranteed | (888) 88-SOURCE | www.artisantg.com

Variety. *We offer more styles and sizes to meet the most demanding specifications in the world's toughest industrial environments.*

Installation. *Time is money. Our push buttons come pre-assembled and ready to install right out of the box.*

Performance. *We set the standard for performance in applications that demand rugged, full-sized push buttons.*

Artisan Technology Group - Quality Instrumentation ... Guaranteed | (888) 88-SOURCE | www.artisantg.com

Design Superiority

Allen-Bradley push buttons are in a class by themselves. They are designed and developed to perform in the most demanding industrial environments.

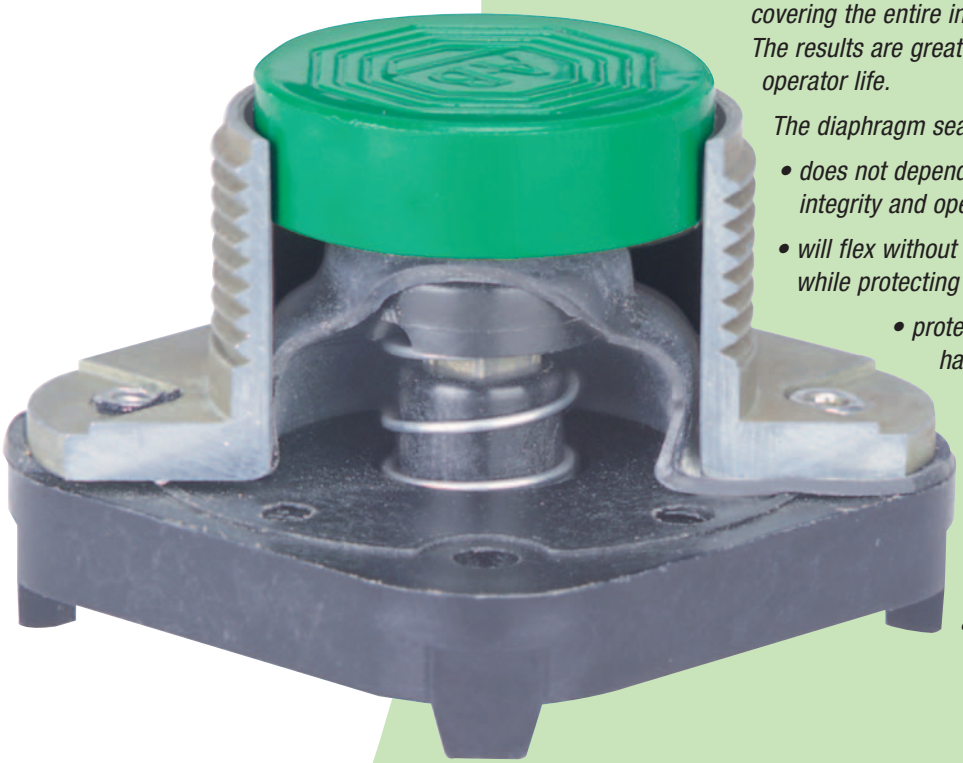

Diaphragm Seal. *Our exclusive, non-lubricated diaphragm seal provides a blanket of protection by covering the entire internal body of the push button. The results are greater reliability and extended operator life.*

The diaphragm seal:

- *does not depend on lubrication to maintain integrity and operating ease.*
- *will flex without stretching and roll without kinking while protecting the inside of the operator.*
- *protects the actuating mechanism from harmful corrosives and abrasives.*

Riveted Construction. *Our die cast operator bushing, diaphragm seal and base plate are secured together by four steel rivets. This rugged construction provides durability and prevents tampering.*

Artisan Technology Group - Quality Instrumentation ... Guaranteed | (888) 88-SOURCE | www.artisantg.com

Selector Switches. *Functionality, durability, safety and quality. Allen-Bradley selector switches put the power of logic technology into manual applications. Available in two, three and four position units with maintained and spring return combinations.*

Variety. *With our complete line of 24 different cams and 33 different contact blocks, you no longer need to "jumper" wires when creating high functionality target arrangements. That's a level of target table functionality unmatched in the industry.*

Flexibility. *Choose from a wide selection of insert colors for standard knobs and knob levers. Selector switch color inserts are field interchangeable as are standard knob, knob lever, wing lever and coin slot operator heads – all for maximum flexibility and minimum inventory.*

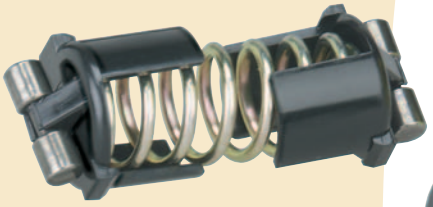

Positive Detent. *Selector switches incorporate a patented safety cam design that creates "positive detent". Positive detent prevents the switch from hanging up between two positions. This helps prevent accidents by reducing the possibility of unwanted changes in contact state.*

Emergency Stops. *Reliability where it's needed the most. Our E-Stops with normally closed late break contacts comply with EN418 and IEC947-5-5 standards. This means that the operator will "latch" when actuated before the contacts will change state.*

Available in 2 or 3 position push-pull or 2 position push-pull/twist release. Our push-pull/twist to release operator allows the use of one product to meet customer requirements worldwide.

Artisan Technology Group - Quality Instrumentation ... Guaranteed | (888) 88-SOURCE | www.artisantg.com

Contact Solutions

Allen-Bradley contact blocks offer features and functionality found no where else in the industry. All products in our 30mm line are designed to utilize the same contact blocks. There are eight different styles of contact blocks for different applications and environments.

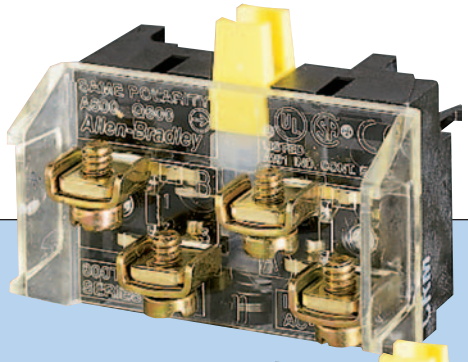

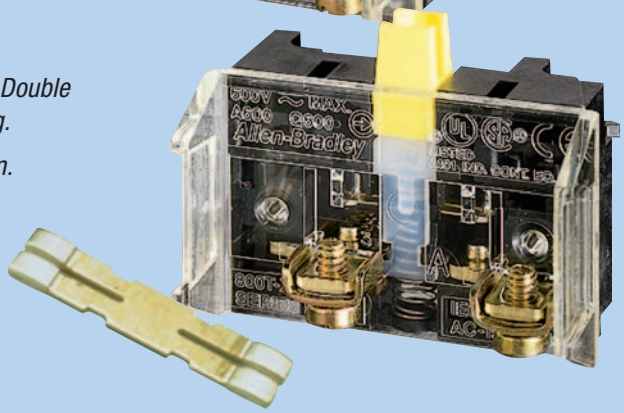

Standard Contact Blocks. *These industry workhorse contact blocks are used most often for pilot duty applications. We offer two types: single circuit shallow and double circuit shallow. The contact blocks:*

- *include self-lifting saddle clamps to make wiring simple. Double circuit contacts feature offset terminals for ease of wiring.*
- *are made with pure fine silver contacts to resist corrosion.*
- *feature a bifurcated spanner providing four different current paths to increase contact reliability.*
- *utilize a flexible spanner design for excellent contact wiping to increase contact reliability and the life of the contact block. The spanner flexes after contact is made to minimize contact bounce and consistently clean the contact surface.*
- *are enclosed by clear, chemically resistant side plates for easy contact inspection on open-terminal versions. Optional Finger Safe (IP2X) versions are color-coded by circuit type and accept terminal markers for custom terminal identification.*

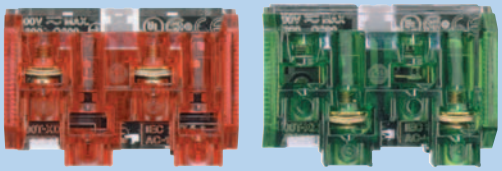

Sealed Switch Contact Blocks.
An economical solution for Division 2/Zone 2 Hazardous Location applications. Features a hermetically sealed glass enclosed contact for reliable switching in highly contaminated and corrosive environments. Contacts are constructed with tungsten, which has excellent resistance to welding. Rated for up to 5 amps continuous current for AC and DC.

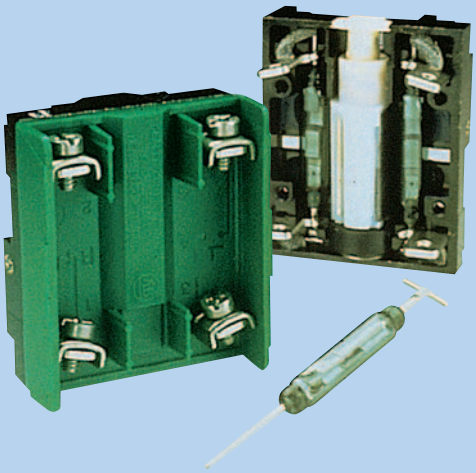

Artisan Technology Group - Quality Instrumentation ... Guaranteed | (888) 88-SOURCE | www.artisantg.com

Stackable Sealed Switch Contact Blocks. *Hermetically sealed contacts are rated for Division 2/Zone 2 Hazardous Location environments and up to 2.5 amps continuous current for AC and DC. Contact blocks have three major features:*

- *IP2X finger safe design.*
- *Provide more space for applications with limited panel depth.*
- *Provide up to 8 circuits.*

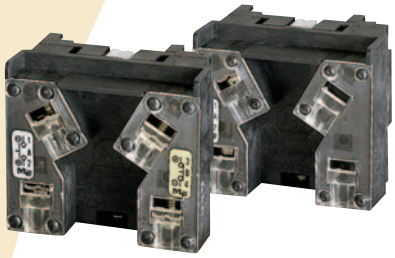

Mini Contact Blocks. *When space is an issue, mini contact blocks are the answer. Offered in a single circuit that is 1/4" shorter than our standard shallow contact blocks, mini blocks can be mounted directly on the operator or stacked on one level of shallow contact blocks for a maximum of 6 circuits.*

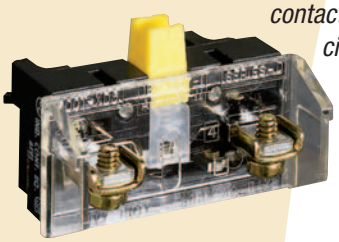

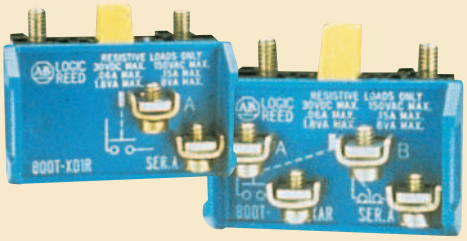

Logic Reed Contact Blocks.
The perfect solution for reliable low-energy switching requirements when interfacing with PLCs and microprocessors. Spanners are constructed from two inert precious metals to withstand corrosion. Contacts are also hermetically sealed to keep a dust free environment and increase contact life. Typical contact bounce time is about 1/2 millisecond. Rated for Division 2/Zone 2 Hazardous Location environments.

Snap Action And Time Delay Contact Blocks. *Snap action contact blocks can be used in short stroke and rapid response applications or when a high level of tactical feedback is required. Available in either 1 N.O.–1 N.C. or 2 N.O.–2 N.C. contact arrangements for momentary operators only. Time delay contacts use pneumatic pressure to provide a delay from the actuated state. Eliminates the need to press two separate buttons in a short time interval which helps increase response time and productivity. Available only as normally open or normally closed.*

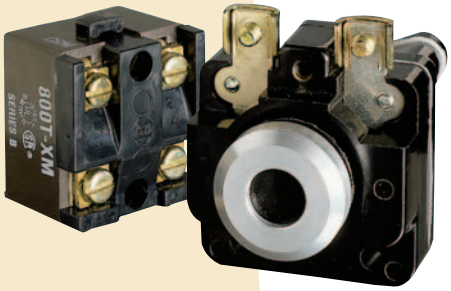

Self Monitoring™ Contact Blocks – Enhance E-Stop Reliability

Allen-Bradley's patented Self Monitoring™ Contact Blocks (SMCB) offer improved E-Stop reliability for critical process control applications. The Self Monitoring Contact Blocks monitor whether or not they are properly installed on the E-Stop operator to help ensure that the normally closed contacts will open when the E-Stop is actuated.

If the SMCB is separated from the E-Stop operator for any reason, the controlled circuit will automatically open.

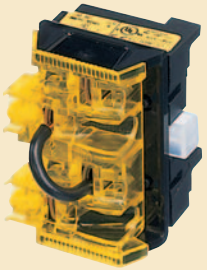

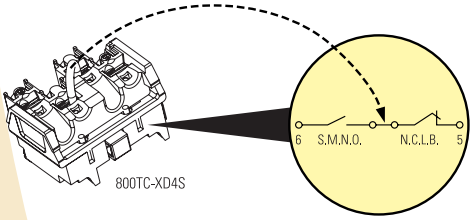

Additional Product Features

- *Same ratings as existing 800T shallow contact blocks respectively*
- *Color-coded yellow for easy identification*
- *IP2X finger safe protection*
- *Terminals identified with IEC style markings*

	Normal Operation	Actuated Button	Improperly Installed 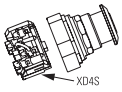
S.M.N.O.	X	X	0
N.C.L.B.	X	0	X
	X	0	0

Note: X = Closed 0 = Open

Artisan Technology Group - Quality Instrumentation ... Guaranteed | (888) 88-SOURCE | www.artisantg.com

PenTUFF™– A Low Voltage PLC Interface Exclusive

Allen-Bradley's patented, direct drive pentafurcated contacts are revolutionizing the market for low voltage switching. They feature spanners with five "fingers" on each side of the spanner for 961 different possible current paths. Each path can carry the full rated load of the contact.

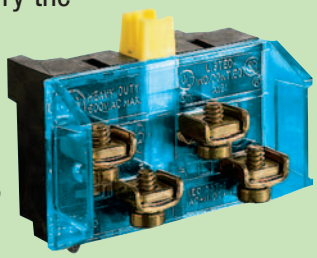

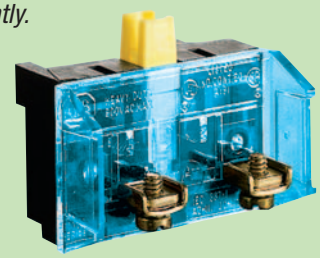

Pentafurcated contacts:

- *feature excellent contact wiping for increased contact reliability and life.*
- *minimize bounce with the rounded design of the spanner's "fingers" and the surface it makes contact with.*
- *make connections sequentially, with each finger making contact independently.*
- *feature a spanner made from inert precious metals to resist corrosion, and flex around debris up to .005 inches.*
- *are excellent for low voltage applications, with the advantage of a direct drive mechanism.*

Pentafurcated 5-finger spanner

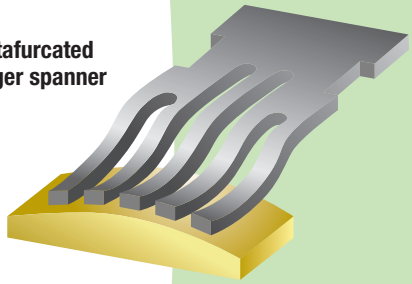

800T MaxDuty™ Contact Blocks

The 800T MaxDuty™ contact blocks are the solution to higher-current switching needs. For use with 800T and 800H 30 mm push buttons, these contacts can switch twice as much current as typical "pilot duty" contacts. In addition, they are also suitable for starting and stopping small, single-phase horsepower-rated motors.

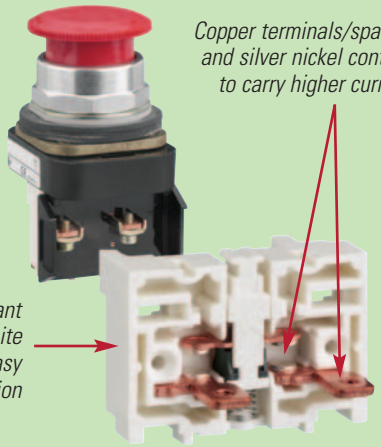

Internal view of MaxDuty™ block

MaxDuty contacts can result in:

- *Longer electrical life, which means less maintenance/downtime and lower product life-cycle cost.*
- *Increased safety, as the contacts are less likely to weld.*
- *Lower Cost, compared to similarly sized contactors, load/cam switches, manual starters, or interposing relays.*

Artisan Technology Group - Quality Instrumentation ... Guaranteed | (888) 88-SOURCE | www.artisantg.com

Special Purpose Operators

There are hundreds of special purpose operators and accessories available to complement our extensive product line. For a complete listing, consult your nearest Allen-Bradley sales office.

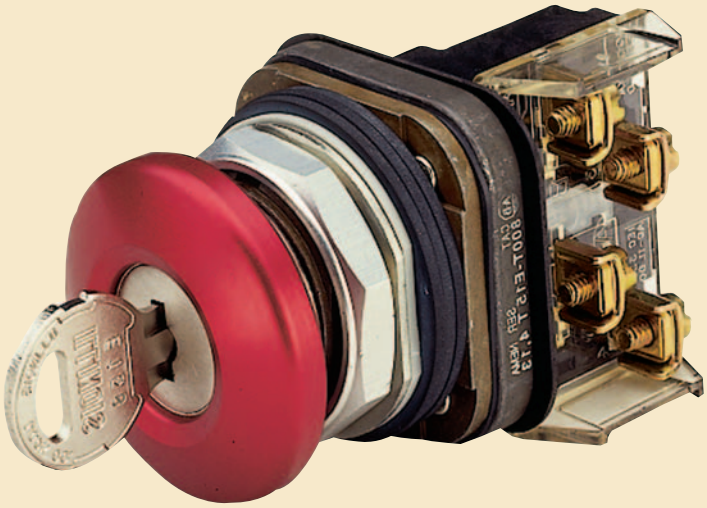

Mushroom Style Cylinder Lock. *A premium offering for applications requiring the safety of a mushroom head operator and the security of a key lock. Place in an emergency stop application to automatically lock the tripped emergency stop. Requires a key to restart. Allows for two possible locking positions and three different locking methods.*

Cluster Pilot Lights. *The ideal solution when panel space is limited. Put two, three, or four indicating lamps in a single unit. Available in full voltage and transformer power modules. Lens caps can be assembled in any combination of red, green, blue, clear, amber, and white.*

Joy Stick. *Excellent for multi-purpose control and toggling applications. Available in one, two, three and four way configurations with a variety of maintained and spring return combinations.*

Selector Jog. *Combines a momentary push button with a two position selector switch. Ideal for applications where panel space is limited.*

Potentiometer. *Available in 20 different resistive loads, from 150 ohms to 4 meg ohms. The operator and resistive element can be purchased separately.*

Wobble Stick. *For applications requiring a momentary switch with easy accessibility. It actuates the contact in any direction and spring returns to the center. A superb solution when the user is required to wear gloves or protective equipment.*

Artisan Technology Group - Quality Instrumentation ... Guaranteed | (888) 88-SOURCE | www.artisantg.com

Enclosures and Control Stations

Flexibility. Durability. Dependability. These are the characteristics of our enclosures and control stations, each designed to meet specific industrial requirements. Control stations are available in custom configurations that are factory assembled free of charge.

800T Enclosures. *The industry standard. These durable enclosures are excellent choices for tough industrial environments. Available in die cast aluminum and sheet metal, we offer surface mount, flush mount, and pendant station configurations. 800T enclosures are UL/CSA approved for the ratings listed below.*

Die Cast

- *Type 4/13 watertight/oiltight, when assembled with 800T operators*
- *Available in 1-16 hole configurations*
- *Oven-baked gray enamel finish*

Pendant Stations

- *Heavy gauge sheet steel construction*
- *Type 13 oiltight when assembled with 800T operators*
- *Includes cable anchor and bushing for ease of wiring and installation*
- *Available in 2-10 hole configurations*
- *Optional wobble stick or mushroom head E-Stop in bottom of enclosure*

Sheet Metal

- *Type 13 Oiltight, when assembled with 800T operators*
- *Available in 6-25 hole configurations*
- *Oven-baked gray enamel finish*

Artisan Technology Group - Quality Instrumentation ... Guaranteed | (888) 88-SOURCE | www.artisantg.com

800H Enclosures. *The same strength, dependability and durability as our 800T line, but with added corrosion resistance. Available in three materials: stainless steel, Rosite (a non-metallic glass polyester material) and fiberglass. 800H enclosures are UL/CSA approved as Type 4/4X/13 watertight/oiltight/corrosion resistant when assembled with 800H operators.*

Stainless Steel

- *Available in 1-8 hole configurations*
- *Provides clean attractive appearance*

Rosite

- *Available in 1-6 hole configurations*
- *Resists the effects of many corrosive fumes and liquids*
- *Low cost alternative*

Fiberglass

- *Available in 1-3 hole configurations*
- *Extra deep to accommodate Stackable Sealed Switch or for ease of wiring*
- *Outdoor Type 3R rating available*

800R Enclosures. *Similar to 800T and 800H enclosures, but enhanced for Division 2/Zone 2 Hazardous Location applications. 800R stations are assembled with 800T/800H operators and our Sealed Switch or Logic Reed contact blocks (below) for performance, reliability and fast delivery. Can be factory or field assembled for either Type 4/13 or 4/4x/13 environments.*

Artisan Technology Group - Quality Instrumentation ... Guaranteed | (888) 88-SOURCE | www.artisantg.com

Variety Of Illumination

Choose from the largest selection of nylon lens caps in the industry. Allen-Bradley caps have superior resistance to breakage and material degradation. Optical enhancements are molded into lens caps for superior illumination. Colors are available in amber, blue, clear, green, red, and white.

Power Solutions. *Power modules and lamp options are designed to meet all your application needs. We offer several power solutions: full voltage, resistor, transformer, and dual input. Lamp types are available in incandescent, neon, and LED. Full voltage, resistor and transformer modules also available in finger safe versions.*

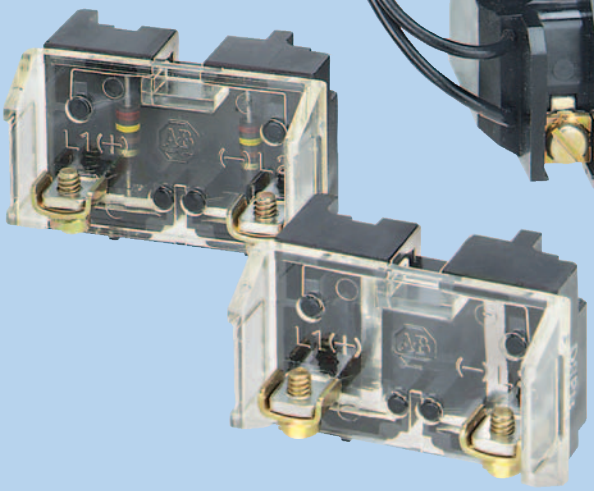

Illumination Options. *Table 1 highlights the variety of lamp types and voltages available. Incandescent lamps include full voltage, resistor, transformer, and dual input, with a voltage range from 6V to 600V. Neon lamps are available in 120V and 240V. LED lamps are available in full voltage, transformer, and dual input from 6V to 600V.*

Table 1: Pilot Light Illumination Options

	VOLTAGE									
	6	12	24	32	48	120	130	240	480	600
INCANDESCENT										
Full Voltage	●	●	●		●	●		●		
Resistor						●				
Transformer					●	●		●	●	●
Dual Input			●			●				
NEON						●		●		
LED										
Full Voltage	●	●	●	●	●	●	●			
Transformer					●	●		●	●	●
Dual Input			●			●				

Artisan Technology Group - Quality Instrumentation ... Guaranteed | (888) 88-SOURCE | www.artisantg.com

Illumination Performance. *Table 2 defines the advantages of specific lamps and power modules based on cost and working environment.*

- ***Incandescent lamps*** *have the widest selection of colors, the highest level of illumination and are the most economical.*
- ***Neon lamps*** *provide excellent resistance to shock and vibration. Cost effective with extended lamp life, neon lamps are available only with clear and amber lens caps.*
- ***LED lamps*** *offer the greatest value by providing the longest lamp life and the best resistance to shock and vibration. In addition, they have an internal shunt resistor for use with solid state outputs. They last up to 100,000 hours. That's over 11 years of usage, 24 hours a day!*

Table 2: Relative Illumination Performance

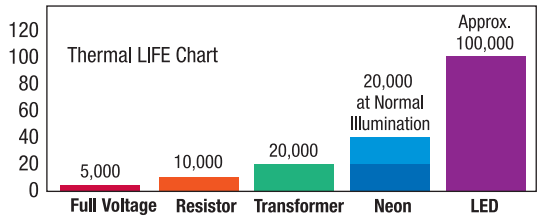

	Full Voltage	Resistor	Transformer	Neon	LED
Brightness	Best	Good	Best	Fair	Good
Shock & Vibration	Fair	Fair	Good	Better	Best
Color Selection	All	All	All	Amber, Clear	Red, Green, Amber, Blue & White

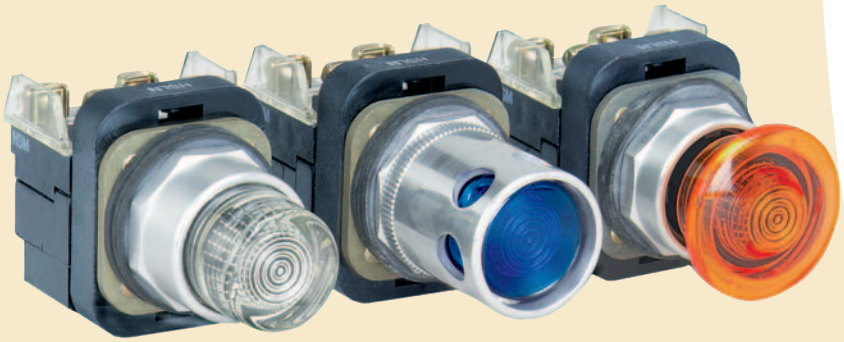

Illuminated Operators. *We offer a complete line of illuminated operators featuring superior sealing, illumination and environmental protection. Illuminated operators offer two way communication–push buttons send signals through illumination and receive signals through the operator function.*

Artisan Technology Group - Quality Instrumentation ... Guaranteed | (888) 88-SOURCE | www.artisantg.com

Accessories

Protective Boots. *Protect your operators from liquids, foreign materials and most corrosive elements. Available in four materials: hypalon, silicone, urethane, and ethylene propylene.*

Finger Safe Terminal Guards. *Add personal protection from direct voltage at contact terminals. Terminal guards comply with IEC IP2X standards, and are available in single-terminal, multi-terminal, and transformer versions. All guards can be purchased as accessories or pre-assembled on operators.*

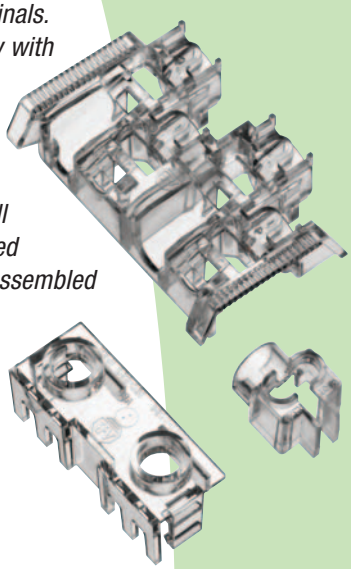

Legend Plates. *Label operators with our wide variety of legend plates. Choose from commonly used standard text, specify custom text or order blank. Available in several different sizes and colors.*

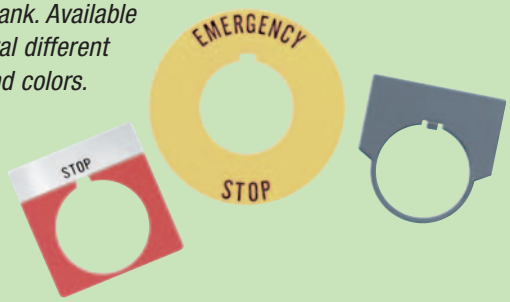

Guard Rings. *Protect operators from accidental actuation. Kit includes a mounting ring and a guard. The guards are available in plastic or metal, depending upon the type of protection required. Can be mounted on illuminated and non-illuminated push buttons.*

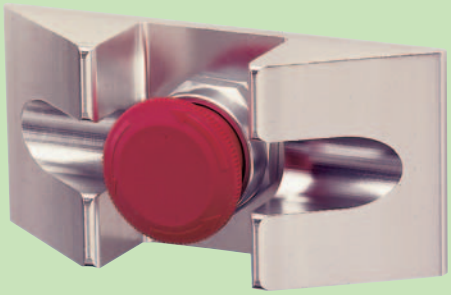

Deflection Guards. *Protect your operator from heavy impact. Fits standard size mushroom head operators. Constructed from rugged extruded aluminum and provides visible indication of illuminated devices.*

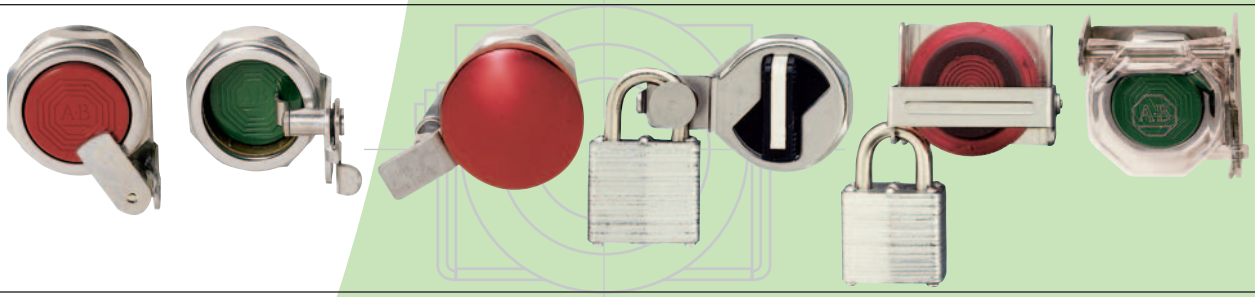

Locking Attachments. *Having the broadest accessory offering in the business means Allen-Bradley can provide the solution for our customer's specific application needs. Locking attachments are available for momentary mushroom heads, selector switches, push-pull operators, extended head and flush head operators.*

Artisan Technology Group - Quality Instrumentation ... Guaranteed | (888) 88-SOURCE | www.artisantg.com

Bulletin 800T/H Push Buttons

- 30.5 mm Mounting Hole
- Type 4/13 Watertight/Oiltight
- Heavy Industrial Stations and Operators Page 17

Bulletin 800R Push Button Stations

- 30.5 mm Mounting Hole
- Types 4/13 and 4/4X/13 Hazardous Locations
- Classes I and II, Division 2 Page 79

Bulletin 800T Small Pilot Lights

- 18 mm Mounting Hole
- Type 4/13 Watertight/Oiltight
- Small Pilot Lights Page 85

Artisan Technology Group - Quality Instrumentation ... Guaranteed | (888) 88-SOURCE | www.artisantg.com

Artisan Technology Group - Quality Instrumentation ... Guaranteed | (888) 88-SOURCE | www.artisantg.com

Bulletin 800T/800H 30.5 mm Push Buttons

- 30.5 mm Mounting Hole
- Type 4/13 Watertight/Oiltight (800T)
- Type 4/4X/13 Corrosion-Resistant/Watertight/Oiltight (800H)
- Heavy Industrial Stations and Operators

Table of Contents

Specifications 17
Product Selection 19
Modifications and Accessories 46
Approx. Dimensions 65

Certifications

- UL Listed — File: E14840, E10314, Guide: NKCR, NOIV
- CSA Certified: LR1234, LR11924
- CE Compliant IEC: 60947-5-1

Specifications ❶

Electrical Ratings		
Contact ratings		Refer to the contact ratings tables below.
Dielectric strength		2200V for one minute, 1300V for one minute (Logic Reed)
Electrical design life cycles		1,000,000 at max. rated load, 200,000 at max. rated load (Logic Reed)
Mechanical Ratings		
Vibration		10…2000 Hz 1.52 mm displacement (peak-to-peak) max./10 G max. (except Logic Reed)
Shock		1/2 cycle sine wave for 11 ms ≥ 25 G (contact fragility) and no damage at 100 G
Degree of protection		Type 1/4/12/13 (800T); Type 1/4/4X/12/13 (800H); IEC 529 IP66/65
Mechanical design life cycles		
Push buttons	(Momentary, non-illuminated)	10,000,000 min.
	(Momentary, illuminated)	250,000 min.
	(Push-pull/twist-to-release)	250,000 min.
Selector switches	(Non-illuminated)	1,000,000 min.
	(Illuminated, key-operated)	200,000 min.
Potentiometers		100,000 min.
All other devices		200,000 min.
Contact operation		Shallow, mini, and low voltage contact blocks: Slow, double make and break Logic Reed and sealed switch contact blocks: Single break magnetic
Wire guage/Terminal screw torque		#18-12 AWG/6…8 lb-in
Typical operating forces		
Operators without contact blocks		Flush, extended, standard mushroom, jumbo plastic mushroom button: 2 lbs max. Jumbo and extended aluminum mushroom head: 3.95 lbs max. Maintained selector switch: 3.6 in. lbs max.
Spring return selector switches		3.6 in.-lbs to stop, 0.2 in.-lbs to return
Illuminated push buttons and push-to-test pilot lights		5 lbs max.
2-position push-pull		7.5 lbs max. push or pull
3-position push-pull		8 lbs max. push to **in** position or pull to **center** position (15 lbs max. pull to **out** position)
Twist-to-release or push-pull		9 lbs max. push or pull 30 in. oz. max. twist, 6 in. oz. minimum return
Potentiometer		Rotational torque 3…12 in.-oz.; stopping torque 12 in.-lbs (minimum)
Contact blocks	Standard	1 lb
	Logic Reed	1 lb max.
	Sealed switch	3 lbs max. at 0.205" plunger travel
	Stackable sealed switch	1 lb max.
Environment		
Temperature range	Operating	–40…+131°F (–40…+55°C)
	Storage	–40…+185°F (–40…+85°C)
Note: Operating temperatures below freezing are based on the absence of moisture and liquids. Consult your local Allen-Bradley Sales Office for use in lower temperature applications.		
Humidity		50% at +104°F (+40°C)

❶ Performance Data — See Industrial Controls Catalog, page Important-2.

Artisan Technology Group - Quality Instrumentation ... Guaranteed | (888) 88-SOURCE | www.artisantg.com

Standard Contact Ratings

Maximum thermal continuous current I_{th} 10 A AC/2.5 A DC. Bulletin 800T units with 800T-XA contacts have ratings as follows:

Max. Opertnl. Volts Ue	Utilization Category		Rated Operational Currents		
	IEC	NEMA	Volts Ue	Make	Break
AC 600	AC-15	A600	120…600 72…120 24…72	7200 VA 60 A 60 A	720 VA 720 VA 10 A
DC 600	DC-13	Q600	28…600 24…28 ❶	69 VA 2.5 A	

❶ For applications below 24V/24 mA, Pen*TUFF* ™ or Logic Reed contacts are recommended.

Sealed Switch Contact Ratings

Maximum continuous current I_{th} 5 A. Bulletin 800T units have control circuit ratings with sealed switch contact blocks as follows:

Max. Opertnl. Volts Ue	Utilization Category		Rated Operational Currents		
	IEC	NEMA	Volts Ue	Make	Break
AC 600	AC-15	B600	120…600 0…120	3600 VA 30 A	360 VA 3 A
DC 300	DC-13	P300	24…300 0…24	138 VA 5.0 A	

Stackable Sealed Switch Contact Ratings

Maximum continuous current I_{th} 2.5 A. Bulletin 800T units have control circuit ratings with sealed switch contact blocks as follows:

Max. Oprtnl. Volts Ue	Utilization Category		Rated Operational Currents		
	IEC	NEMA	Volts Ue	Make	Break
AC 300	AC-15	C300	120…300 0…120	1800 VA 15 A	180 VA 1.5 A
DC 150	DC-13	Q150	24…150 0…24	69 VA 2.5 A	

Logic Reed Contact Ratings

Minumum — DC: 5V, 1 mA
Maximum — DC: 30V, 0.06 A, AC: 150V, 0.15 A
Should only be used with resistive loads.

Materials Used in 800H Type 4X Operators

Thermoplastic Polyester (Fiberglass Reinforced)

- Bushings
- Mounting rings
- Sockets

Thermoplastic Polyester

- Non-illuminated button caps

Transparent Amorphous Nylon

- Pilot light lens cap
- Illuminated button caps

Glass Filled Crystalline Nylon

- Thrust washer

Mineral Filled Nylon

- Trim washer

Nitrile (Synthetic Rubber)

- Gaskets and internal seals

Pen*TUFF* ™ (Low Voltage) Contact Ratings

Minimum DC: 5V, 1 mA
Maximum thermal continuous current I_{th} 2.5 A AC/1.0 A DC. Bulletin 800T units with 800T-XAV contacts have ratings as follows:

Max. Opertnl. Volts Ue	Utilization Category		Rated Operational Currents		
	IEC	NEMA	Volts Ue	Make	Break
AC 300	AC-15	C300	120…300 0…120	1800 VA 15 A	180 VA 1.5 A
DC 150	DC-13	R150	24…150 0…24	28 VA 1.0 A	

Snap Action Contact Ratings

Max. Opertnl. Volts Ue	Contact Rating Designation	Rated Operational Currents		
		Volts Ue	Make	Break
AC 300	A300	120…300 24…72	7200 VA 60 A	720 VA 10 A
DC 250	—	230…250 115…125	0.2 A 0.4 A	

MaxDuty Contact Rating

Maximum thermal continuous current I_{th} 24 A.
Pilot Duty — 120V AC, 12 A; 24V DC
Motor Ratings — 120V AC, 1.5 Hp; 240V AC, 3 Hp; 24V DC, 10A FLA/60 A LRA

Time Delay Contacts

Max. Opertnl. Volts Ue	Contact Rating Designation	Rated Operational Currents		
		Volts Ue	Make	Break
AC 120	B150	120	3600 VA	360 VA

Note: This device is not rated for DC applications.
Adjustment range: 0.5…15 s ± 25% I_{th} = 5 A

Artisan Technology Group - Quality Instrumentation ... Guaranteed | (888) 88-SOURCE | www.artisantg.com

Die Cast Aluminum
Cat. No. 800T-2TAR

Booted Operator – Stainless Steel
Cat. No. 800H-1HA4T

Booted Operator – Glass Polyester
Cat. No. 800H-1HA4R

Operator	Contact Symbol	Contact Action	Button Type	Button Color	Legend Marking	Type 4/13	Type 4/4X/13	
						Die Cast Aluminum	Booted Operator – Stainless Steel	Booted Operator – Glass Polyester
						Cat. No.	Cat. No. ❶	Cat. No. ❶
One Push Button	1 N.O. - 1 N.C.	Momentary	Extended	Red	STOP	800T-1TA	800H-1HA4T	800H-1HA4R
		Momentary	Flush	Green	START	800T-1TB	800H-1HB4T	800H-1HB4R
		Momentary	Flush	Black	No Legend	800T-1TX	800H-1HX4T	800H-1HX4R
Two Push Buttons	1 N.O. - 1 N.C. Each Button	Momentary	Flush Extended	Green Red	START STOP	800T-2TA	800H-2HA4T	800H-2HA4R
		Momentary	Flush Flush	Black Black	No Legends	800T-2TX	800H-2HX4T	800H-2HX4R
One Pilot Light Two Push Buttons	Red 1 N.O. - 1 N.C. Each Button	Momentary	120V AC Flush Extended	Red Green Red	No Legend START STOP	800T-2TAR	800H-2HAR4T	800H-2HAR4R
		Momentary	120V AC Flush Flush	Red Black Black	No Legends	800T-2TXR	800H-2HXR4T	800H-2HXR4R
3-Position Selector Switch	1 N.O. - 1 N.C.	Maintained	Knob Lever	Black with white insert	HAND OFF AUTO	800T-R3TA	—	—
		Maintained	Knob Lever	Black with white insert	No Legend	800T-R3TX	—	—
One Push Button	1 N.C.L.B.	Maintained	Push-Pull/ Twist	Red	EMERG STOP	800T-1TYM ❷	—	—
Two Push Buttons	1 N.O. - 1 N.C.	Maintained	Flush Extended	Green Red	START STOP	800T-2TAM	800H-2HAM4T	800H-2HAM4R
		Maintained	Flush Flush	Black Black	No Legends	800T-2TXM	800H-2HXM4T	800H-2HXM4R

❶ Boot material is hypalon with brass threaded-insert. For added corrosion resistance, specify Bulletin 800HS for booted push buttons with stainless steel inserts. Add suffix **L** to the cat. no. for station with bootless operators. Example: **Cat. No. 800H-1HB4TL**.
❷ Supplied with yellow legend plate to comply with IEC60947-5-5 and NFPA79 E-Stop standards that require yellow background.

Artisan Technology Group - Quality Instrumentation ... Guaranteed | (888) 88-SOURCE | www.artisantg.com

2-Position Push-Pull and Push-Pull/Twist Release, Non-Illuminated

Note: A jumbo or large legend plate is recommended, if space allows.

2-Position Push-Pull
Cat. No. 800T-FX6D4

2-Position Push-Pull/Twist
Cat. No. 800T-FXT6D4

2-Position Push-Pull/Twist
Cat. No. 800H-FRXT6D4

Contact Type	Operator Position: Maintained Out	Operator Position: Maintained In	Button Color	Type 4/13: Push-Pull Cat. No.	Type 4/13: Push-Pull/Twist Release Cat. No.	Type 4/4X/13: Push-Pull/Twist Release Cat. No.
N.C.L.B. ❶	X	O	Red	800T-FX6D4	800T-FXT6D4	800H-FRXT6D4
N.O. - N.C.L.B. ❶	O X	X O	Red	800T-FX6A1	800T-FXT6A1	800H-FRXT6A1
N.C.L.B. - N.C.L.B. ❶	X X	O O	Red	800T-FX6A5	800T-FXT6A5	800H-FRXT6A5
S.M.C.B. ❶❷	X	O	Red	800TC-FX6D4S	800TC-FXT6D4S	800HC-FRXT6D4S
N.O. - S.M.C.B. ❶❷	O X	X O	Red	800TC-FX6A1S	800TC-FXT6A1S	800HC-FRXT6A1S
S.M.C.B. - S.M.C.B. ❶❷	X X	O O	Red	800TC-FX6A5S	800TC-FXT6A5S	800HC-FRXT6A5S

Note: X = Closed/O = Open
Note: Emergency stop push buttons are compliant with EN-418 and IEC 60947-5-5 Standards when using N.C.L.B. contact blocks.

❶ Normally closed late break contact. When button is pushed from the OUT to IN position, the mechanical detent action of the operator occurs before electrical contacts change state. When the button is pulled from the IN to the OUT position, the electrical contacts change state before the mechanical detent occurs.
❷ The Self Monitoring Contact Block (S.M.C.B.) is composed of a N.C.L.B. contact wired in series with a N.O. monitoring contact. The N.O. monitoring contact automatically closes when the S.M.C.B. is properly installed onto the E-stop operator. If the S.M.C.B. is separated from the E-stop operator, the N.O. monitoring contact will automatically open.

Accessories — Page 46
Legend Plates — Page 59
Approximate Dimensions — Page 65

Artisan Technology Group - Quality Instrumentation ... Guaranteed | (888) 88-SOURCE | www.artisantg.com

2-Position Push-Pull and Push-Pull/Twist Release Units, Illuminated

Note: A jumbo or large legend plate is recommended, if space allows.

Illuminated 2-Position Push-Pull
Cat. No. 800T-FXP16RA1

Illuminated 2-Position Push-Pull/Twist
Cat. No. 800T-FXTP16RA1

Illuminated 2-Position Push-Pull/Twist
Cat. No. 800H-FRXTP16RA1

Type	Lamp	Volts	Color	Operator Position			Type 4/13		Type 4/4X/13
					Maintained	Maintained	Push-Pull Release	Push-Pull/Twist Release	Push-Pull/Twist Release
				Contacts	Out	In	Cat. No.	Cat. No.	Cat. No.
Full Voltage	Incandescent	24 AC/DC	Red	N.O. - N.C.L.B. ❶❷	O X	X O	800T-FXQ24RA1	800T-FXTQ24RA1	800H-FRXTQ24RA1
	LED	120 AC					800T-FXQH10RA1	800T-FXTQH10RA1	800H-FRXTQH10RA1
		24 AC/DC					800T-FXQH24RA1	800T-FXTQH24RA1	800H-FRXTQH24RA1
Transformer	Incandescent	120 AC	Red	N.O. - N.C.L.B. ❶❷	O X	X O	800T-FXP16RA1	800T-FXTP16RA1	800H-FRXTP16RA1
		240 AC					800T-FXP26RA1	800T-FXTP26RA1	800H-FRXTP26RA1
	LED	120 AC					800T-FXPH16RA1	800T-FXTPH16RA1	800H-FRXTPH16RA1
		240 AC					800T-FXPH26RA1	800T-FXTPH26RA1	800H-FRXTPH26RA1

Note: X = Closed/O = Open
Note: Emergency stop push buttons are compliant with EN-418 and IEC 60947-5-5 Standards when using N.C.L.B. contact blocks.

❶ Normally closed late break contact. When button is pushed from the OUT to IN position, the mechanical detent action of the operator occurs before electrical contacts change state. When the button is pulled from the IN to the OUT position, the electrical contacts change state before the mechanical detent occurs.
❷ Consult your local Allen-Bradley sales office for availability of illuminated E-stops with Self Monitoring Contact Blocks (S.M.C.B.s).

Accessories — Page 46
Legend Plates — Page 59
Approximate Dimensions — Page 65

Artisan Technology Group - Quality Instrumentation ... Guaranteed | (888) 88-SOURCE | www.artisantg.com

Momentary Contact Push Button Units, Non-Illuminated

Flush Head Unit
Cat. No. 800T-A1A

Extended Head Unit
Cat. No. 800T-B6A

Booted Unit
Cat. No. 800H-R2A

Bootless Flush Head Unit
Cat. No. 800H-AR1A

Contact Type	Button Color	Type 4/13		Type 4/4X/13	
		Flush Head	Extended Head	Booted ❶	Bootless Flush Head
		Cat. No.	Cat. No.	Cat. No.	Cat. No.
No Contact	Green Black Red	800T-A1 800T-A2 800T-A6	800T-B1 800T-B2 800T-B6	800H-R1 800H-R2 800H-R6	800H-AR1 800H-AR2 800H-AR6
1 N.O.	Green Black Red	800T-A1D1 800T-A2D1 800T-A6D1	800T-B1D1 800T-B2D1 800T-B6D1	800H-R1D1 800H-R2D1 800H-R6D1	800H-AR1D1 800H-AR2D1 800H-AR6D1
1 N.C.	Green Black Red	800T-A1D2 800T-A2D2 800T-A6D2	800T-B1D2 800T-B2D2 800T-B6D2	800H-R1D2 800H-R2D2 800H-R6D2	800H-AR1D2 800H-AR2D2 800H-AR6D2
1 N.O. - 1 N.C.	Green Black Red	800T-A1A 800T-A2A 800T-A6A	800T-B1A 800T-B2A 800T-B6A	800H-R1A 800H-R2A 800H-R6A	800H-AR1A 800H-AR2A 800H-AR6A

800 T – A 1 A

a b c d e f

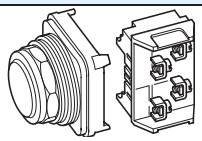

a

Protection Rating	
Code	**Description**
T	Metal, Type 4/13
H	Plastic, Type 4/4X/13

b

Finger-Safe Guards	
Code	**Description**
Blank	No Guards
C	Guards on Terminals

c

Operator Type		
800T Type 4/13 Code	**Description**	**800H Type 4/4X/13 Code**
A	Flush Head	AR
B	Extended Head	BR
D	Mushroom Head	DR
DX	Mushroom Head less Color Cap	DRX
—	Bootless Guarded Head	GR
—	Booted Head	R ❶

d

Color Cap	
Code	**Description**
Blank	Used only when ordering Operator Type DX/DRX
1	Green
2	Black
3	Orange ❷
4	Gray ❷
5	White ❷

d (cont'd)

Color Cap	
Code	**Description**
6	Red
7	Blue
9	Yellow

e

Special Mushroom Head	
Code	**Description**
Blank	No Special Head
J	Jumbo Mushroom Head—Plastic ❹
L	Jumbo Mushroom Head—Metal ❹

Note: Special Mushroom Head options only apply to Mushroom Head operator Type Code **D/DR**.

f

Contact Block(s)	
Code	**Description**
Blank	No Contacts on operator
Standard	
D1	1 N.O.
D2	1 N.C.
D3	1 N.O.E.M.
D4	1 N.C.L.B.
D5	1 N.O. (Mini)
D6	1 N.C. (Mini)
A1	1 N.C.L.B. - 1 N.O.
A2	2 N.O. ❸
A4	2 N.C.
A7	1 N.C.L.B. - 1 N.C.
A	1 N.O. - 1 N.C.
B	2 N.O. - 2 N.C.

f (cont'd)

Contact Block(s)	
Code	**Description**
Blank	No Contacts on operator
Pen*TUFF* (Low Voltage)	
D1V	1 N.O.
D2V	1 N.C.
D3V	1 N.O.E.M.
D4V	1 N.C.L.B.
AV	1 N.O. - 1 N.C.
BV	2 N.O. - 2 N.C.
Time Delay	
T	1 N.O. Depress close, delayed opening
S	1 N.C. Depress open, delayed closure
Snap Action	
M	1 N.O. - 1 N.C.
N	2 N.O. - 2 N.C.
Class 1, Div. 2/Zone 2	
Logic Reed	
D1R	1 N.O.
D2R	1 N.C.
A2R	2 N.O. ❸
A4R	2 N.C.
AR	1 N.O. - 1 N.C.
BR	2 N.O. - 2 N.C.

f (cont'd)

Contact Block(s)	
Code	**Description**
Blank	No Contacts on operator
Class 1, Div. 2/Zone 2	
Sealed Switch	
D1P	1 N.O.
D2P	1 N.C.
A2P	2 N.O.
A4P	2 N.C.
AP	1 N.O. - 1 N.C.
BP	2 N.O. - 2 N.C
Stackable Sealed Switch	
D1Y	1 N.O.
D2Y	1 N.C.
A2Y	2 N.O.
A4Y	2 N.C.
AY	1 N.O. - 1 N.C.
BY	2 N.O. - 2 N.C

Time Delay Contacts

Series C field installable kits can only be used with Series T or later operators. Adjustable range of 0.5 to 15 s + 25%. Maximum continuous current I_{th} 5 A.

Snap Action Contacts

Snap action contacts feature a quick make, quick break snap-action mechanism that is only available on factory assembled units. Maximum continuous current I_{th} 10 A.

❶ Underlying operators are "flush head" type, except red which are "extended head." Boot material is hypalon with brass threaded-insert. See page 51 for additional boot materials.
❷ Not available for booted operators.
❸ A2 and A2R contact blocks cannot be stacked upon, but can stack on other contact blocks.
❹ Jumbo Mushroom heads are not available in white.

Accessories — Page 46
Legend Plates — Page 59
Approximate Dimensions — Page 65

Artisan Technology Group - Quality Instrumentation ... Guaranteed | (888) 88-SOURCE | www.artisantg.com

Momentary Contact Push Button Units, Illuminated

Extended Head Without Guard
Cat. No. 800T-PB16R

Extended Head With Guard
Cat. No. 800T-PA16R

Extended Head without Guard
Cat. No. 800H-PRB16R

Extended Head with Guard
Cat. No. 800H-PRA16R

Type	Lamp	Volts	Color	Type 4/13		Type 4/4X/13	
				Extended Head Without Guard ❶	Extended Head With Guard ❶	Extended Head without Guard ❶	Extended Head with Guard ❶
				Cat. No.	Cat. No.	Cat. No.	Cat. No.
Operator Only (supplied without power module, lamp, lens cap, or contact blocks)				800T-SB00XX	800T-SA00XX	800H-SRB00XX	800H-SRA00XX
Full Voltage	Incandescent	24 AC/DC	Red Green Amber	800T-QB24R 800T-QB24G 800T-QB24A	800T-QA24R 800T-QA24G 800T-QA24A	800H-QRB24R 800H-QRB24G 800H-QRB24A	800H-QRA24R 800H-QRA24G 800H-QRA24A
	LED	120 AC	Red Green Amber	800T-QBH10R 800T-QBH10G 800T-QBH10A	800T-QAH10R 800T-QAH10G 800T-QAH10A	800H-QRBH10R 800H-QRBH10G 800H-QRBH10A	800H-QRAH10R 800H-QRAH10G 800H-QRAH10A
		24 AC/DC	Red Green Amber	800T-QBH24R 800T-QBH24G 800T-QBH24A	800T-QAH24R 800T-QAH24G 800T-QAH24A	800H-QRBH24R 800H-QRBH24G 800H-QRBH24A	800H-QRAH24R 800H-QRAH24G 800H-QRAH24A
	No Lamp	0…250 AC/DC	No Lens	800T-QBN25	800T-QAN25	800H-QRBN25	800H-QRAN25
Transformer	Incandescent	120 AC 50/60 Hz	Red Green Amber	800T-PB16R 800T-PB16G 800T-PB16A	800T-PA16R 800T-PA16G 800T-PA16A	800H-PRB16R 800H-PRB16G 800H-PRB16A	800H-PRA16R 800H-PRA16G 800H-PRA16A
	LED		Red Green Amber	800T-PBH16R 800T-PBH16G 800T-PBH16A	800T-PAH16R 800T-PAH16G 800T-PAH16A	800H-PRBH16R 800H-PRBH16G 800H-PRBH16A	800H-PRAH16R 800H-PRAH16G 800H-PRAH16A
	No Lamp		No Lens	800T-PBN16	800T-PAN16	800H-PRBN16	800H-PRAN16

❶ Includes one standard 800T-XA (1 N.O. - 1 N.C.) contact block.

800 T _____ – P B H 16 R _____
a b c d e f g h

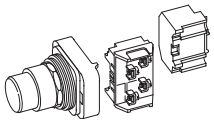

AC/DC and internal shunt resistor, order 130V AC/DC LED (Code 13).

a

Protection Rating	
Code	Description
T	Metal, Type 4/13
H	Plastic, Type 4/4X/13

b

Finger-Safe Guards	
Code	Description
Blank	No Guards
C	Guards on Terminals

c

Power Module Type		
800T Type 4/13	Description	800H Type 4/4X/13
Code		Code
P	Transformer (or Dual Input)	PR
Q	Full Voltage (or Resistor)	QR
R	Neon (only amber or clear)	RR

d

Head Type	
Code	Description
A	Extended Head with Guard
B	Extended Head without Guard
M	Mushroom
MJ	Jumbo Mushroom

e

Illumination Options	
Transformer/Full Voltage	
Code	Description
Blank	Incandescent
H	LED ❷
Resistor/Neon	
Blank	No Options
Dual Input	
D	Diode Type ❸
DH	Diode Type LED ❷❸
T	Transformer — Relay Type
TH	Transformer — Relay Type LED ❷

f

Voltage - Transformer	
Code	Description
36	48V AC 50/60 Hz
16	120V AC 50/60 Hz
26	240V AC 50/60 Hz
76	277V AC 50/60 Hz
46	480V AC 50/60 Hz
56	600V AC 50/60 Hz

❷ LEDs available in red, green, amber, blue, and white. White LEDs only available in 6V, 24V, 120V, and 130V full voltage and all transformer units. LED color matches lens color, except clear lens supplied with white LED and white lens supplied with amber LED. All LEDs except 120V have an internal shunt resistor for use with solid-state outputs.

❸ Diode type dual input provides circuit isolation via opposing diodes. Not recommended for use with solid-state outputs and neon indicators.

f (cont'd)

Voltage - Full	
Code	Description
06	6V AC/DC
12	12V AC/DC
24	24V AC/DC
32	32V AC/DC ❹
48	48V AC/DC
10	120V AC/DC ❺
13	130V AC/DC ❹
20	240V AC/DC ❹
Resistor	
11	120V AC/DCResistor
Neon	
10	120V AC/DC
20	240V AC/DC
Dual Input	
16	120V AC
24	24V AC/DC (dual input diode only)

g

Lens Color	
Code	Color
Blank	No Lens with standard contacts 1 N.O. - 1 N.C.
X	No Lens if ordering contacts other than standard 1 N.O. - 1 N.C.
A	Amber
B	Blue
C	Clear
G	Green
R	Red

❹ 32V and 130V are LED only. 240V is incandescent only.

❺ 120V LED is AC only and does not contain internal shunt resistor. For

g (cont'd)

Lens Color	
Code	Color
W	White

h

Contact Block(s)	
Code	Description
X	No Contact Blocks
Standard	
Blank	1 N.O. - 1 N.C.
D1	1 N.O.
D2	1 N.C.
Pen *TUFF* (Low Voltage)	
D1V	1 N.O.
D2V	1 N.C.
AV	1 N.O. - 1 N.C.
Class 1, Div. 2/Zone 2 Logic Reed	
D1R	1 N.O.
D2R	1 N.C.
AR	1 N.O. - 1 N.C.
Sealed Switch	
D1P	1 N.O.
D2P	1 N.C.
AP	1 N.O. - 1 N.C.
Stackable Sealed Switch	
D1Y	1 N.O.
D2Y	1 N.C.
AY	1 N.O. - 1 N.C.

Artisan Technology Group - Quality Instrumentation ... Guaranteed | (888) 88-SOURCE | www.artisantg.com

2-Position Selector Switch Units, Non-Illuminated

Standard Knob Operator
Cat. No. 800T-H2A

Knob Lever Operator
Cat. No. 800T-H17A

Standard Knob Operator
Cat. No. 800H-HR2A

Contact Type	Side	Contact	Operator Position		Operator Type M = Maintained S = Spring Return	Type 4/13 Standard Knob Cat. No.	Type 4/13 Knob Lever Cat. No.	Type 4/4X/13 Standard Knob Cat. No.
No Contacts	—	—	—	—	M M	800T-H2	800T-H17	800H-HR2
					S→M	800T-H4	800T-H18	800H-HR4
					M←S	800T-H5	800T-H19	800H-HR5
1 N.O.	White	A	O	X	M M	800T-H2D1	800T-H17D1	800H-HR2D1
					S→M ❶	800T-H4D1	800T-H18D1	800H-HR4D1
					M←S	800T-H5D1	800T-H19D1	800H-HR5D1
1 N.O. - 1 N.C.	White	A B	O X	X O	M M	800T-H2A	800T-H17A	800H-HR2A
					S→M ❶	800T-H4A	800T-H18A	800H-HR4A
					M←S	800T-H5A	800T-H19A	800H-HR5A

Note: X = Closed/O = Open
❶ Target tables are reversed from those shown.

800 T – HA 2 A
a b c d e

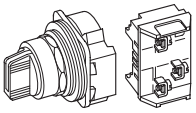

a

Protection Rating	
Code	**Description**
T	Metal, Type 4/13
H	Plastic, Type 4/4X/13

b

Finger-Safe Guards	
Code	**Description**
Blank	No Guards
C	Guards on Terminals

c

Knob Insert Colors		
800T Type 4/13 Code	**Description**	**800H Type 4/4X/13 Code**
H	White	HR
HA	Red	HRA
HB	Green	HRB
HC	Blue	HRC
HE	Yellow	HRE
HF	Orange	HRF
HX	Packet of Colored Inserts ❷	HRX
Metal Wing Lever Colors ❹		
Code	**Color**	**Code**
HA	Red	—
HG	Gray	—

❷ Packet of colored inserts, one of each color.
❸ Target tables are reversed from those shown.
❹ Only available on 800T, Type 4/13 operators.
❺ Contact target tables same as those listed for standard contact blocks.

d

Operator Type and Function	
Standard Knob	
Code	**Operator Function**
2	Maintained
4	Spring Return From Left ❸
5	Spring Return From Right
Knob Lever ❹	
Code	**Operator Function**
17	Maintained
18	Spring Return From Left ❸
19	Spring Return From Right
Metal Wing Lever ❹	
Code	**Operator Function**
11	Maintained
15	Spring Return From Left ❸
16	Spring Return From Right
Coin Slot ❹	
Code	**Operator Function**
6	Maintained
7	Spring Return From Left
8	Spring Return From Right

e

Contact Block(s)			
Code	**Description**		
	Contact Configuration	**2-Position**	
Blank	No Contacts on operator	—	—
Standard			
D1	1 N.O.	O	X
D2	1 N.C.	X	O
A	1 N.O. - 1 N.C.	O	X
		X	O
B	2 N.O. - 2 N.C.	O	X
		X	O
		O	X
		X	O
Max Duty (Horsepower Rated) ❺			
D1M	1 N.O.		
D2M	1 N.C.		
Pen*TUFF* (Low Voltage) ❺			
D1V	1 N.O.		
D2V	1 N.C.		
AV	1 N.O. - 1 N.C.		
BV	2 N.O. - 2 N.C.		
Class1, Div. 2/Zone 2			
Logic Reed ❺			
D1R	1 N.O.		
D2R	1 N.C.		
AR	1 N.O. - 1 N.C.		
BR	2 N.O. - 2 N.C.		
Sealed Switch ❺			
D1P	1 N.O.		
D2P	1 N.C.		
AP	1 N.O. - 1 N.C.		
BP	2 N.O. - 2 N.C.		
Stackable Sealed Switch ❺			
D1Y	1 N.O.		
D2Y	1 N.C.		
AY	1 N.O. - 1 N.C.		
BY	2 N.O. - 2 N.C.		

Artisan Technology Group - Quality Instrumentation ... Guaranteed | (888) 88-SOURCE | www.artisantg.com

2-Position Selector Switch Units, Non-Illuminated (800T only)

2-Position Cylinder Lock Operator
Cat. No. 800T-H33A

Contact Type	Side	Contact	Operator Position		Operator Type M = Maintained S = Spring Return	Type 4/13 Cylinder Lock ❺ Key Removal — Left ❷ Cat. No.	Key Removal — Right ❷ Cat. No.	Key Removal — Both ❷ Cat. No.
No Contacts	—	—	—	—	M M	800T-H31	800T-H32	800T-H33
					M←S	800T-H48	—	—
1 N.O.	White	A	O	X	M M	800T-H31D1	800T-H32D1	800T-H33D1
					S→M ❶	—	800T-H42D1	—
					M←S	800T-H48D1	—	—
1 N.O. - 1 N.C.	White	A B	O X	X O	M M	800T-H31A	800T-H32A	800T-H33A
					S→M ❶	—	800T-H42A	—
					M←S	800T-H48A	—	—

Note: X = Closed/O = Open
❶ Target tables are reversed from those shown.
❷ Keys removable from maintained positions only.

800 T ___ – H31 ___ A
a b c d e

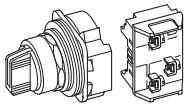

a

Protection Rating	
Code	**Description**
T	Metal, Type 4/13

b

Finger-Safe Guards	
Code	**Description**
Blank	No Guards
C	Guards on Terminals

c

Key Removal Position	
Maintained	
Code	**Operator Function**
H31	Key Removal — Left
H32	Key Removal — Right
H33	Key Removal — Both
Spring Return From Left	
Code	**Operator Function**
H42	Key Removal — Right ❸
Spring Return From Right	
Code	**Operator Function**
H48	Key Removal — Left

❸ Target tables are reversed from those shown.
❹ Contact target tables same as those listed for standard and Pen*TUFF* contact blocks.
❺ Device supplied with 2 keys. Replacement key part number for standard D018 key is x-181170. See Accessories section for additional replacement key numbers.

d

Key Options for Cylinder Locks ❺			
Code	**D Series Key No.**	**Code**	**T Series Key No.**
Blank	D018 (Std. Key)	15	T112
03	D020	16	T115
04	D025	17	T324
05	D335	18	T382
06	D429	19	T404
07	D461	20	T171
08	D111	21	T484
09	D587	22	T547
10	D682	23	T569
11	D713	24	T692
12	D900	25	T752
13	D992	26	T178
14	D118	—	—

e

Contact Block(s)			
Code	**Description**		
	Contact Configuration	**2-Position**	
Blank	No Contacts on operator	—	—
Standard			
D1	1 N.O.	O	X
D2	1 N.C.	X	O
A	1 N.O. - 1 N.C.	O	X
		X	O
B	2 N.O. - 2 N.C.	O	X
		X	O
		O	X
		X	O
Max Duty (Horsepower Rated)			
D1M	1 N.O.		
D2M	1 N.C.		
Pen*TUFF* (Low Voltage)			
D1V	1 N.O.		
D2V	1 N.C.		
AV	1 N.O. - 1 N.C.		
BV	2 N.O. - 2 N.C.		
Class1, Div. 2/Zone 2			
Logic Reed ❹			
D1R	1 N.O.		
D2R	1 N.C.		
AR	1 N.O. - 1 N.C.		
BR	2 N.O. - 2 N.C.		
Sealed Switch ❹			
D1P	1 N.O.		
D2P	1 N.C.		
AP	1 N.O. - 1 N.C.		
BP	2 N.O. - 2 N.C.		
Stackable Sealed Switch ❹			
D1Y	1 N.O.		
D2Y	1 N.C.		
AY	1 N.O. - 1 N.C.		
BY	2 N.O. - 2 N.C.		

Accessories — Page 46
Legend Plates — Page 59
Approximate Dimensions — Page 65

Artisan Technology Group - Quality Instrumentation ... Guaranteed | (888) 88-SOURCE | www.artisantg.com

3-Position Selector Switch Units, Non-Illuminated

Standard Knob Operator
Cat. No. 800T-J2A

Knob Lever Operator
Cat. No. 800T-J17A

Standard Knob Operator
Cat. No. 800H-JR2A

Contact Type	Operator Position			Operator Type M = Maintained S = Spring Return	Type 4/13 Standard Knob Cat. No.	Type 4/13 Knob Lever Cat. No.	Type 4/4X/13 Standard Knob Cat. No.
No Contacts	—	—	—	M M M	800T-J2	800T-J17	800H-JR2
				S→M M	800T-J4	800T-J18	800H-JR4
				M M←S	800T-J5	800T-J19	800H-JR5
				S→M←S	800T-J91	800T-J20	800H-JR91
1 N.O. - 1 N.C.	O X	O O	X O	M M M	800T-J2A	800T-J17A	800H-JR2A
				S→M M	800T-J4A	800T-J18A	800H-JR4A
				M M←S	800T-J5A	800T-J19A	800H-JR5A
				S→M←S	800T-J91A	800T-J20A	800H-JR91A

Note: X = Closed/O = Open

800 T _____ – J 2 _____ C
a b c d e f

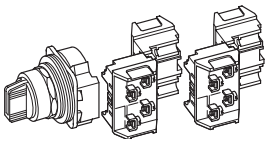

a

Protection Rating	
Code	**Description**
T	Metal, Type 4/13
H	Plastic, Type 4/4X/13

b

Finger-Safe Guards	
Code	**Description**
Blank	No Guards
C	Guards on Terminals

c

Knob Insert Colors		
800T Type 4/13 Code	**Description**	**800H Type 4/4X/13 Code**
J	White	JR
JA	Red	JRA
JB	Green	JRB
JC	Blue	JRC
JE	Yellow	JRE
JF	Orange	JRF
JX	Packet of Colored Inserts ❶	JRX
Metal Wing Lever Colors ❷		
Code	**Color**	**Code**
JA	Red	—
JG	Gray	—

d

Knob/Lever Type Operators	
Standard Knob	
Code	**Operator Function**
2	Maintained
4	Spring Return from Left
5	Spring Return from Right
91	Spring Return from Both
Knob Lever ❷	
Code	**Operator Function**
17	Maintained
18	Spring Return from Left
19	Spring Return from Right
20	Spring Return from Both
Metal Wing Lever ❷	
Code	**Operator Function**
11	Maintained
15	Spring Return from Left
16	Spring Return from Right
141	Spring Return from Both
Coin Slot ❷	
Code	**Operator Function**
10	Spring Return from Both

e

Cam Option ❸	
Code	**Description**
Blank	KB7 Cam (Std.)
KA1	KA1 Cam
KA7	KA7 Cam
Note: See Table 1 for cam selections.	

e (cont'd)

Cam Option ❸	
Code	**Description**
KC1	KC1 Cam
KC7	KC7 Cam
KD7	KD7 Cam
KE7 ❹	KE7 Cam
KQ1	KQ1 Cam
KQ7	KQ7 Cam
KR1 ❹	KR1 Cam
KR7 ❹	KR7 Cam
KT1 ❹	KT1 Cam
KT7 ❹	KT7 Cam
KU7 ❹	KU7 Cam
Note: See Table 1 for cam selections.	

f

Contact Blocks	
Code	**Description**
Blank	No Contacts on operator
Standard	
A	1 N.O. - 1 N.C. 1-**800T-XA** on white side
B	2 N.O. - 2 N.C. 2-**800T-XA**s — 1 on white side/1 on black side
Pen*TUFF* (Low Voltage)	
AV	1 N.O. - 1 N.C. 1-**800T-XAV** on white side
BV	2 N.O. - 2 N.C. 2-**800T-XAV**s — 1 on white side/1 on black side

f (cont'd)

Contact Blocks	
Code	**Description**
Class 1, Div. 2/Zone 2	
Logic Reed	
AR	1 N.O. - 1 N.C. 1-**800T-XAR** on white side
BR	2 N.O. - 2 N.C. 2-**800T-XAR**s — 1 on white side/1 on black side
Sealed Switch	
AP	1 N.O. - 1 N.C. 1-**800T-XAP** on white side
BP	2 N.O. - 2 N.C. 2-**800T-XAP**s — 1 on white side/1 on black side
Stackable Sealed Switch	
AY	1 N.O. - 1 N.C. 1-**800T-XAY** on white side
BY	2 N.O. - 2 N.C. 2-**800T-XAY**s — 1 on white side/1 on black side
Note: Associated targets shown in Table 1.	

❶ Packet of colored inserts, one of each color.
❷ Only available on 800T, Type 4/13 operators.
❸ If an overlapping cam is required, consult factory.
❹ Wing levers are not suitable with these cam codes.

Table 1. Cam and Contact Block Functionality Table (**Note:** X = Closed/O = Open)

Contact Block Suffix Code	Contact Block Side	Ckts	Cam Codes: KB7 (Std.)	KA1	KA7	KC1	KC7	KD7	KE7	KQ1	KQ7	KR1	KR7	KT1	KT7	KU7
A_	White	A	X O O	X O O	O O X	O O X	X O O	O O X	X O O	X O X	X O X	X O X	X O X	O O X	X O O	X O O
		B	O O X	O X O	O X O	O X O	O X O	O X O	O X X	O X O	O X O	O X O	O X O	X O O	O O X	O X O
	Black	A	X O O	X O O	O O X	O O X	X O O	X O O	O O X	O O X	X O O	O O X	X O O	O O X	X O O	O O X
		B	O O X	O X O	O X O	X O O	O O X	O X O	X X O	O X O	O X O	X X O	O X X	X X O	O X X	X X O
B_	White	A	X O O	X O O	O O X	O O X	X O O	O O X	X O O	X O X	X O X	X O X	X O X	O O X	X O O	X O O
		B	O O X	O X O	O X O	O X O	O X O	O X O	O X X	O X O	O X O	O X O	O X O	X O O	O O X	O X O
	Black	A	X O O	X O O	O O X	O O X	X O O	X O O	O O X	O O X	X O O	O O X	X O O	O O X	X O O	O O X
		B	O O X	O X O	O X O	X O O	O O X	O X O	X X O	O X O	O X O	X X O	O X X	X X O	O X X	X X O
C_	White	A	X O O	X O O	O O X	O O X	X O O	O O X	X O O	X O X	X O X	X O X	X O X	O O X	X O O	X O O
		B	O O X	O X O	O X O	O X O	O X O	O X O	O X X	O X O	O X O	O X O	O X O	X O O	O O X	O X O
	Black	A	X O O	X O O	O O X	O O X	X O O	X O O	O O X	O O X	X O O	O O X	X O O	O O X	X O O	O O X
		B	O O X	O X O	O X O	X O O	O O X	O X O	X X O	O X O	O X O	X X O	O X X	X X O	O X X	X X O

Artisan Technology Group - Quality Instrumentation ... Guaranteed | (888) 88-SOURCE | www.artisantg.com

3-Position Selector Switch Units, Non-Illuminated (800T only)

3-Position Cylinder Lock Operator
Cat. No. 800T-J41A

Contact Type	Operator Position			Operator Type M = Maintained S = Spring Return	Type 4/13 Cylinder Lock ❸ Key Removal — Left ❶ Cat. No.	Key Removal — Center ❶ Cat. No.	Key Removal — All ❶ Cat. No.
No Contacts	—	—	—	M M M	800T-J41	800T-J42	800T-J44
				S→M M	—	800T-J50	—
				M M←S	800T-J69	800T-J38	—
				S→M←S	—	800T-J631	—
1 N.O. - 1 N.C.	O X	O O	X O	M M M	800T-J41A	800T-J42A	800T-J44A
				S→M M	—	800T-J50A	—
				M M←S	800T-J69A	800T-J38A	—
	X-closed/O=open			S→M←S	—	800T-J631A	—

❶ Key removable in maintained positions only.

800 T – J41 KC1 A
a b c d e f

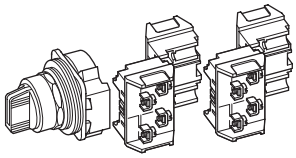

a

Protection Rating	
Code	**Description**
T	Metal, Type 4/13

b

Finger-Safe Guards	
Code	**Description**
Blank	No Guards
C	Guards on Terminals

c

Key Removal Position	
Maintained	
Code	**Operator Function**
J41	Key Removal — Left
J42	Key Removal — Center
J43	Key Removal — Right
J44	Key Removal — All
J45	Key Removal — Left and Center
J46	Key Removal — Right and Left
J47	Key Removal — Right and Center
Spring Return from Left	
J50	Key Removal — Center
J52	Key Removal — Right
J51	Key Removal — Right and Center

c (cont'd)

Key Removal Position	
Spring Return from Right	
Code	**Operator Function**
J69	Key Removal — Left
J38	Key Removal — Center
J73	Key Removal — Left and Center
Spring Return from Both	
J631	Key Removal — Center

d

Key Options for Cylinder Locks ❸	
Code	**Key No.**
Blank	D018 (Standard Key)
03	D020
04	D025
05	D335
06	D429

Note: Refer to page 25 for additional key option codes.

e

Cam Option ❷	
Code	**Description**
Blank	KB7 Cam (Std.)
KA1	KA1 Cam
KA7	KA7 Cam
KC1	KC1 Cam

Note: See Table 1 for cam selections.

e (cont'd)

Cam Option ❷	
Code	**Description**
KC7	KC7 Cam
KD7	KD7 Cam
KE7	KE7 Cam
KQ1	KQ1 Cam
KQ7	KQ7 Cam
KR1	KR1 Cam
KR7	KR7 Cam
KT1	KT1 Cam
KT7	KT7 Cam
KU7	KU7 Cam

Note: See Table 1 for cam selections.

f

Contact Blocks	
Code	**Description**
Blank	No Contacts on operator
Standard	
A	1 N.O. - 1 N.C. 1-**800T-XA** on white side
B	2 N.O. - 2 N.C. 2-**800T-XA**s — 1 on white side/1 on black side
Pen*TUFF* (Low Voltage)	
AV	1 N.O. - 1 N.C. 1-**800T-XAV** on white side
BV	2 N.O. - 2 N.C. 2-**800T-XAV**s — 1 on white side/1 on black side

f (cont'd)

Contact Blocks	
Class 1, Div. 2/Zone 2	
Logic Reed	
Code	**Description**
AR	1 N.O. - 1 N.C. 1-**800T-XAR** on white side
BR	2 N.O. - 2 N.C. 2-**800T-XAR**s — 1 on white side/1 on black side
Sealed Switch	
AP	1 N.O. - 1 N.C. 1-**800T-XAP** on white side
BP	2 N.O. - 2 N.C. 2-**800T-XAP**s — 1 on white side/1 on black side
Stackable Sealed Switch	
AY	1 N.O. - 1 N.C. 1-**800T-XAY** on white side
BY	2 N.O. - 2 N.C. 2-**800T-XAY**s — 1 on white side/1 on black side

Note: Associated targets shown in Table 1.

❷ If an overlapping cam is required, consult factory.
❸ Device suppied with 2 keys. Replacement key part number for standard d018 key is x181170. See Accessories section for additional replacement key numbers.

Table 1. Cam and Contact Block Functionality Table (**Note:** X = Closed/O = Open)

Contact Block Suffix Code	Contact Block Side	Ckts	Cam Codes KB7 (Std.)			KA1			KA7			KC1			KC7			KD7			KE7			KQ1			KQ7			KR1			KR7			KT1			KT7			KU7		
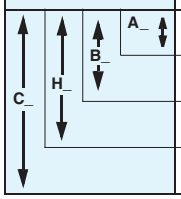	White	A	X	O	O	X	O	O	O	O	X	O	O	X	X	O	O	O	O	X	X	O	O	X	O	X	X	O	X	X	O	X	X	O	X	O	O	X	X	O	O	X	O	O
		B	O	O	X	O	X	O	O	X	O	O	X	O	O	X	O	O	X	O	O	X	X	O	X	O	O	X	O	O	X	O	O	X	O	X	O	O	O	O	X	O	X	O
	Black	A	X	O	O	X	O	O	O	O	X	O	O	X	X	O	O	X	O	O	O	O	X	O	O	X	X	O	O	O	O	X	X	O	O	O	O	X	X	O	O	O	O	X
		B	O	O	X	O	X	O	O	X	O	X	O	O	O	O	X	O	X	O	X	X	O	O	X	O	O	X	O	X	X	O	O	X	X	X	O	O	X	X	X	X	X	O
	White	A	X	O	O	X	O	O	O	O	X	O	O	X	X	O	O	O	O	X	X	O	O	X	O	X	X	O	X	X	O	X	X	O	X	O	O	X	X	O	O	X	O	O
		B	O	O	X	O	X	O	O	X	O	O	X	O	O	X	O	O	X	O	O	X	X	O	X	O	O	X	O	O	X	O	O	X	O	X	O	O	O	O	X	O	X	O
	Black	A	X	O	O	X	O	O	O	O	X	O	O	X	X	O	O	X	O	O	O	O	X	O	O	X	X	O	O	O	O	X	X	O	O	O	O	X	X	O	O	O	O	X
		B	O	O	X	O	X	O	O	X	O	X	O	O	O	O	X	O	X	O	X	X	O	O	X	O	O	X	O	X	X	O	O	X	X	X	O	O	X	X	X	X	X	O

Artisan Technology Group - Quality Instrumentation ... Guaranteed | (888) 88-SOURCE | www.artisantg.com

4-Position Selector Switch Units, Non-Illuminated

Standard Knob Operator
Cat. No. 800T-N2KN4B

Knob Lever Operator
Cat. No. 800T-N17KN4B

Standard Knob Operator
Cat. No. 800H-NR2KF4AAXX

Contact Type	Operator Position				Operator Type M = Maintained S = Spring Return	Type 4/13 Standard Knob Cat. No.	Type 4/13 Knob Lever Cat. No.	Type 4/4X/13 Standard Knob Cat. No.
No Contacts	—	—	—	—	M M M M	800T-N2KF4	800T-N17KF4	800H-NR2KF4
					S→M M M	800T-N3KF4	800T-N29KF4	800H-NR3KF4
					M M M←S	800T-N9KF4	800T-N30KF4	800H-NR9KF4
2 N.O. - 2 N.C.	X O O O	O X O O	O O X O	O O O X	M M M M	800T-N2KF4B	800T-N17KF4B	800H-NR2KF4AAXX
					S→M M M	800T-N3KF4B	800T-N29KF4B	800H-NR3KF4AAXX
					M M M←S	800T-N9KF4B	800T-N30KF4B	800H-NR9KF4AAXX

Note: X = Closed/O = Open

800 T ____ – N 2 KF4 B
a b c d e f

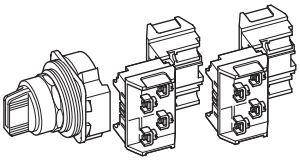

a

Protection Rating	
Code	**Description**
T	Metal, Type 4/13
H	Plastic, Type 4/4X/13

b

Finger-Safe Guards	
Code	**Description**
Blank	No Guards
C	Guards on Terminals

c

Knob Insert Colors		
800T Type 4/13 Code	**Description**	**800H Type 4/4X/13 Code**
N	White	NR
NA	Red	NRA
NB	Green	NRB
NC	Blue	NRC
NE	Yellow	NRE
NF	Orange	NRF
NX	Packet of Colored Inserts ❶	NRX
Metal Wing Lever Colors ❹		
Code	**Color**	**Code**
NA	Red	—
NG	Gray	—

d

Operator Function and Knob Type	
Standard Knob	
Code	**Operator Function**
2	Maintained
3	Spring Return from Position 1 to Position 2
9	Spring Return from Position 4 to Position 3
Knob Lever ❹	
Code	**Operator Function**
17	Maintained
29	Spring Return from Position 1 to Position 2
30	Spring Return from Position 4 to Position 3
Metal Wing Lever ❹	
Code	**Operator Function**
11	Maintained
13	Spring Return from Position 1 to Position 2
14	Spring Return from Position 4 to Position 3

e

Cam Option ❺	
Code	**Description**
KF4	F Cam
KG4	G Cam
KK4 ❻	K Cam
KM4 ❻	M Cam
KP4	P Cam
KN4	Overlapping Cam ❷

f

Contact Blocks ❺		
800T Type 4/13 Code	**Description**	**800H Type 4/4X/13 Code**
Blank	No Contacts on operator	Blank
Standard		
B	2 N.O. - 2 N.C. 2-**800T-XA**s — 1 on white side/ 1 on black side	AAXX
H	3 N.O. - 3 N.C. 3-**800T-XA**s — 2 on white side/ 1 on black side	AAAX
C	4 N.O. - 4 N.C. 4-**800T-XA**s — 2 on white side/ 2 on black side	AAAA

f (cont'd)

Contact Blocks		
800T Type 4/13 Code	**Description**	**800H Type 4/4X/13 Code**
Pen*TUFF* (Low Voltage) ❸		
BV	2 N.O. - 2 N.C.	FFXX
HV	3 N.O. - 3 N.C.	FFFX
CV	4 N.O. - 4 N.C.	FFFF
Class 1, Div. 2/Zone 2		
Logic Reed ❸		
BR	2 N.O. - 2 N.C.	TTXX
HR	3 N.O. - 3 N.C.	TTTX
CR	4 N.O. - 4 N.C.	TTTT
Sealed Switch ❸		
BP	2 N.O. - 2 N.C.	PPXX
Stackable Sealed Switch ❸		
BY	2 N.O. - 2 N.C.	TTXX
HY	3 N.O. - 3 N.C.	TTTX
CY	4 N.O. - 4 N.C.	TTTT

❶ Packet of colored inserts, one of each color except orange.
❷ Overlapping cam. See Publication 800T-2.8 for overlap specifications.
❸ Contact block mounting same as listed for standard contact blocks.
❹ Only available on 800T, Type 4/13 operators.
❺ See Table 1 for proper cam/contact selection.
❻ Not available with Wing levers.

Table 1. Cam and Contact Block Functionality Table (**Note:** X = Closed/O = Open)

Contact Block Suffix Code	Contact Block Side	Ckts	Cam Codes KF4				KG4				KK4				KM4				KP4				KN4 ❷			
C_ H_ B_	White	A	X	O	O	O	X	X	O	O	O	O	X	X	X	O	O	O	O	O	O	X	O	X	O	O
		B	O	X	O	O	O	O	X	O	X	X	O	O	O	X	X	O	O	X	O	O	O	O	O	X
	Black	A	O	O	O	X	X	O	O	O	X	O	O	X	O	O	O	X	O	O	X	X	O	O	X	O
		B	O	O	X	O	O	O	O	X	O	X	X	O	O	X	O	O	X	O	O	O	X	O	O	O
	White	A	X	O	O	O	X	X	O	O	O	O	X	X	X	O	O	O	O	O	O	X	O	X	O	O
		B	O	X	O	O	O	O	X	O	X	X	O	O	O	X	X	O	O	X	O	O	O	O	O	X
	Black	A	O	O	O	X	X	O	O	O	X	O	O	X	O	O	O	X	O	O	X	X	O	O	X	O
		B	O	O	X	O	O	O	O	X	O	X	X	O	O	X	O	O	X	O	O	O	X	O	O	O

Artisan Technology Group - Quality Instrumentation ... Guaranteed | (888) 88-SOURCE | www.artisantg.com

4-Position Selector Switch Units, Non-Illuminated (800T only)

Cylinder Lock Operator
Cat. No. 800T-N32KF4B

Contact Type	Operator Position				Operator Type M = Maintained S = Spring Return	Cylinder Lock – Type 4/13 ❹		
						Key Removal — Position 2 ❶	Key Removal — Position 3 ❶	Key Removal — All ❶
						Cat. No.	Cat. No.	Cat. No.
No Contacts	—	—	—	—	M M M M	800T-N32KF4	800T-N33KF4	800T-N61KF4
					S→M M M	800T-N132KF4	800T-N133KF4	—
					M M M←S	800T-N232KF4	800T-N233KF4	—
2 N.O. - 2 N.C.	X O O O	O X O O	O O X O	O O O X	M M M M	800T-N32KF4B	800T-N33KF4B	800T-N61KF4B
	X = Closed/O = Open				S→M M M	800T-N132KF4B	800T-N133KF4B	—
					M M M←S	800T-N232KF4B	800T-N233KF4B	—

❶ Key removable in maintained positions only.

800 T – N31 KM4 C
a b c d e f

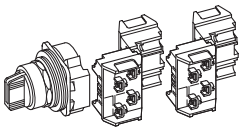

a

Protection Rating	
Code	Description
T	Metal, Type 4/13

b

Finger-Safe Guards	
Code	Description
Blank	No Guards
C	Guards on Terminals

c

Key Removal Position and Operator Function	
Maintained	
Code	Operator Function
N31	Key Removal Position 1
N32	Key Removal Position 2
N33	Key Removal Position 3
N34	Key Removal Position 4

c (cont'd)

Key Removal Position and Operator Function	
Spring Return From Position 1 to Position 2	
Code	Operator Function
N61	Key Removal All Positions
N132	Key Removal Position 2
N133	Key Removal Position 3
N134	Key Removal Position 4
N154	Key Removal Positions 2, 3, and 4
Spring Return From Position 4 to Position 3	
Code	Operator Function
N231	Key Removal Position 1
N232	Key Removal Position 2
N233	Key Removal Position 3
N251	Key Removal Positions 1, 2, and 3

d

Key Options for Cylinder Locks ❹	
D Series	
Code	Key No.
Blank	D018 (Standard Key)
03	D020
04	D025
05	D335
06	D429
Note: Refer to page 25 for additional key option codes.	

e

Cam Option	
Code	Description
KF4	F Cam
KG4	G Cam
KK4	K Cam
KM4	M Cam
KP4	P Cam
KN4	Overlapping Cam ❷
Note: See Table 1 for cam selections.	

f

Contact Blocks	
Code	Description
Blank	No Contacts on operator
Standard	
B	2 N.O. - 2 N.C. 2-**800T-XA**s — 1 on white side/ 1 on black side
H	3 N.O. - 3 N.C. 3-**800T-XA**s — 2 on white side/ 1 on black side
C	4 N.O. - 4 N.C. 4-**800T-XA**s — 2 on white side/ 2 on black side
Pen*TUFF* (Low Voltage) ❸	
BV	2 N.O. - 2 N.C.
HV	3 N.O. - 3 N.C.
CV	4 N.O. - 4 N.C.
Class 1, Div. 2/Zone 2	
Logic Reed ❸	
BR	2 N.O. - 2 N.C.
HR	3 N.O. - 3 N.C.
CR	4 N.O. - 4 N.C.
Sealed Switch ❸	
BP	2 N.O. - 2 N.C.
Stackable Sealed Switch ❸	
BY	2 N.O. - 2 N.C.
HY	3 N.O. - 3 N.C.
CY	4 N.O. - 4 N.C.
Note: Associated targets shown in Table 1.	

Table 1. Cam and Contact Block Functionality Table (**Note:** X = Closed/O = Open)

Contact Block Suffix Code	Contact Block Side	Ckts	Cam Codes (X = Closed/O = Open) KF4				KG4				KK4				KM4				KP4				KN4 ❷			
C_	White	A	X	O	O	O	X	X	O	O	O	O	X	X	X	O	O	O	O	O	O	X	O	X	O	O
		B	O	X	O	O	O	O	X	O	X	X	O	O	O	X	X	O	O	X	O	O	O	O	O	X
H_	Black	A	O	O	O	X	X	O	O	O	X	O	O	X	O	O	O	X	O	O	X	X	O	O	X	O
		B	O	O	X	O	O	O	O	X	O	X	X	O	O	X	O	O	X	O	O	O	X	O	O	O
B_	White	A	X	O	O	O	X	X	O	O	O	O	X	X	X	O	O	O	O	O	O	X	O	X	O	O
		B	O	X	O	O	O	O	X	O	X	X	O	O	O	X	X	O	O	X	O	O	O	O	O	X
	Black	A	O	O	O	X	X	O	O	O	X	O	O	X	O	O	O	X	O	O	X	X	O	O	X	O
		B	O	O	X	O	O	O	O	X	O	X	X	O	O	X	O	O	X	O	O	O	X	O	O	O

❷ Overlapping cam. See Publication 800T-2.8 for overlap specifications.
❸ Contact block mounting same as listed for standard contact blocks.
❹ Device supplied with 2 keys. Replacement key part number for standard D018 key is x-181170. See Accessories section for additional replacement key numbers.

Accessories — Page 46
Legend Plates — Page 59
Approximate Dimensions — Page 65

Artisan Technology Group - Quality Instrumentation ... Guaranteed | (888) 88-SOURCE | www.artisantg.com

2-Position Knob/Lever Type Selector Switch Units, Illuminated

Standard Knob Operator
Cat. No. 800T-16HR2KB6AX

Knob Lever Operator
Cat. No. 800H-16HRR17KB6AX

Type	Lamp	Volts	Color	Operator Position		Operator Type M = Maintained S = Spring Return	Type 4/13 Standard Knob Cat. No.	Type 4/4X/13 Standard Knob Cat. No.
Operator Only ❶				No Contacts		M M	800T-00HX2KB6	800H-00HRX2KB6
Full Voltage	Incandescent	24 AC/DC	Red	X	O	M M	800T-24HR2KB6AX	800H-24HRR2KB6AX
						S→M ❷	800T-24HR4KL8AX	800H-24HRR4KL8AX
						M←S	800T-24HR5KL8AX	800H-24HRR5KL8AX
	LED			O	X	M M	800T-24HRH2KB6AX	800H-24HRRH2KB6AX
						S→M ❷	800T-24HH4KL8AX	800H-24HRH4KL8AX
						M←S	800T-24HRH5KL8AX	800H-24HRRH5KL8AX
	No Lamp	0…250 AC/DC	No Knob			M M	800T-25HXN2KB6AX	800H-25HRXN2KB6AX
Transformer	Incandescent	120 AC 50/60 Hz	Red	X	O	M M	800T-16HR2KB6AX	800H-16HRR2KB6AX
						S→M ❷	800T-16HR4KL8AX	800H-16HRR4KL8AX
						M←S	800T-16HR5KL8AX	800H-16HRR5KL8AX
	LED			O	X	M M	800T-16HRH2KB6AX	800H-16HRRH2KB6AX
						S→M ❷	800T-16HRH4KL8AX	800H-16HRRH4KL8AX
						M←S	800T-16HRH5KL8AX	800H-16HRRH5KL8AX
	No Lamp		No Knob			M M	800T-16HXN2KB6AX	800H-16HRXN2KB6AX

Note: X = Closed/O = Open
❶ Operator only supplied without power module, lamp, lens cap, or contact blocks.
❷ Target tables are reversed from those shown.

800	T		– 16	H	R		2	KB7	A (First Level)	X (Second Level)
	a	*b*	*c*	*d*	*e*	*f*	*g*	*h*	*i*	*j*

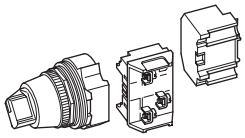

a

Protection Rating	
Code	**Description**
T	Metal, Type 4/13
H	Plastic, Type 4/4X/13

b

Finger-Safe Guards	
Code	**Description**
Blank	No Guards
C	Guards on Terminals

c

Power Module Type and Voltage	
Full Voltage	
Code	**Description**
6	6V AC/DC
12	12V AC/DC
24	24V AC/DC
32	32V AC/DC ❸
48	48V AC/DC
10	120V AC ❸
13	130V AC/DC ❸
Transformer	
36	48V AC 50/60 Hz
16	120V AC 50/60 Hz
26	240V AC 50/60 Hz
76	277V AC 50/60 Hz
46	480V AC 50/60 Hz
56	600V AC 50/60 Hz

d

No. of Positions		
800T Type 4/13	Description	800H Type 4/4X/13
Code		Code
H	2-Position	HR

e

Knob Color	
Code	**Color**
A	Amber
B	Blue
C	Clear
G	Green
R	Red
W	White
X	No Knob

f

Illumination Options	
Code	**Description**
Blank	Incandescent
H	LED ❹

g

Operator Function and Knob Type	
Standard Knob or No Knob	
Code	**Operator Function**
2	Maintained
4	Spring Return from Left
5	Spring Return from Right
Knob Lever	
17	Maintained
18	Spring Return from Left
19	Spring Return from Right

h

Cam Options	
2-Position	
Code	**Operator Function**
KB6	Maintained Cam
KL8	Spring Return Cam

i, j

Contact Blocks ❺	
Code	**Description**
Blank (both pos.)	No Contacts on operator
Standard	
D	1 N.O.
E	1 N.C.
A	1 N.O. - 1 N.C.
X	No Contacts in this position
Pen*TUFF* (Low Voltage)	
H	1 N.O.
U	1 N.C.
F	1 N.O. - 1 N.C.
X	No Contact in this position
Class 1, Div. 2/Zone 2	
Logic Reed	
V	1 N.O.
W	1 N.C.
T	1 N.O. - 1 N.C.
X	No Contacts in this position
Sealed Switch	
R	1 N.O.
S	1 N.C.
P	1 N.O. - 1 N.C.
X	No Contacts in this position
Stackable Sealed Switch	
5	1 N.O.
6	1 N.C.
7	1 N.O. - 1 N.C.
X	No Contacts in this position

Table 1. Selector Switch Cam Targets

Cam Description (2-Position)		
Target		Contact Block Code ❻
O	X	D, H, V, R, 5
X	O	E, U, W, S, 6

X = Closed/O = Open

Table 2. Contact Block Code Reduction Rules

Contact Block Substitution	
Combination	**Code**
Standard	
D + E	A
D + D	M ❼
E + E	N
D + J	B
E + J	C

❸ LED only.
❹ LEDs available in red, green, amber, blue, and white. White LEDs only available in 6V, 24V, 120V, and 130V full voltage and all transformer units. LED color matches lens color, except clear lens supplied with white LED and white lens supplied with amber LED. All LEDs except 120V have an internal shunt resistor for use with solid-state outputs.
❺ Contact blocks used on white side only.
❻ Target tables are reversed for spring return from left operators.
❼ XA2 and XA2R contact blocks cannot be stacked upon, but can stack on other contact blocks.

Artisan Technology Group - Quality Instrumentation ... Guaranteed | (888) 88-SOURCE | www.artisantg.com

3-Position Knob/Lever Type Selector Switch Units, Illuminated

Standard Knob Operator
Cat. No. 800T-16JR2KB7AX

Knob Lever Operator
Cat. No. 800H-16JRR17KB7AX

Type	Lamp	Volts	Color	Operator Position			Operator Type M = Maintained S = Spring Return	Type 4/13 Standard Knob Cat. No.	Type 4/4X/13 Standard Knob Cat. No.
Operator Only ❶				No Contacts			M M M	800T-00JX2KB7	800H-24JRR17KB7AX
Full Voltage	Incandescent	24 AC/DC	Red	X	O	O	M M M	800T-24JR2KB7AX	800H-24JRR18KB7AX
							S→M M	800T-24JR4KB7AX	800H-24JRR19KB7AX
							M M←S	800T-24JR5KB7AX	800H-24JRRH17KB7AX
	LED			O	O	X	M M M	800T-24JRH2KB7AX	800H-24JRRH18KB7AX
							S→M M	800T-24JRH4KB7AX	800H-24JRRH20KB7AX
							M M←S	800T-24JRH5KB7AX	800H-16JRR17KB7AX
	No Lamp	0…250 AC/DC	No Knob				M M M	800T-25JXN2KB7AX	800H-16JRR18KB7AX
Transformer	Incandescent	120 AC 50/60 Hz	Red	X	O	O	M M M	800T-16JR2KB7AX	800H-16JRR19KB7AX
							S→M M	800T-16JR4KB7AX	800H-16JRRH17KB7AX
							M M←S	800T-16JR5KB7AX	800H-16JRRH18KB7AX
	LED			O	O	X	M M M	800T-16JRH2KB7AX	800H-16JRRH19KB7AX
							S→M M	800T-16JRH4KB7AX	800H-24JRR17KB7AX
							M M←S	800T-16JRH5KB7AX	800H-24JRR18KB7AX
	No Lamp		No Knob				M M M	800T-16JXN2KB7AX	800H-24JRR19KB7AX

Note: X = Closed/O = Open
❶ Operator only supplied without power module, lamp, lens cap, or contact blocks.

800	T		– 16	J	R		2	KB7	A	X
	a	*b*	*c*	*d*	*e*	*f*	*g*	*h*	*i* (First Level)	*j* (Second Level)

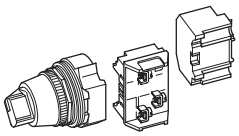

a

Protection Rating	
Code	**Description**
T	Metal, Type 4/13
H	Plastic, Type 4/4X/13

b

Finger-Safe Guards	
Code	**Description**
Blank	No Guards
C	Guards on Terminals

c

Power Module Type and Voltage	
Full Voltage	
Code	**Description**
6	6V AC/DC
12	12V AC/DC
24	24V AC/DC
32	32V AC/DC ❷
48	48V AC/DC
10	120V AC ❷
13	130V AC/DC ❷
Transformer	
Code	**Description**
16	120V AC 50/60 Hz
26	240V AC 50/60 Hz
Other voltages available	

d

No. of Positions		
800T Type 4/13 Code	Description	800H Type 4/4X/13 Code
J	3-Position	JR

e

Knob Color	
Code	**Color**
A	Amber
B	Blue
C	Clear
G	Green
R	Red
W	White
X	No Knob

f

Illumination Options	
Code	**Description**
Blank	Incandescent
H	LED ❸

g

Operator Function & Knob Type	
Standard Knob or No Knob	
Code	**Operator Function**
2	Maintained
4	Spring Return from Left
5	Spring Return from Right
91	Spring Return from Both
Knob Lever	
Code	**Operator Function**
17	Maintained
18	Spring Return from Left
19	Spring Return from Right
20	Spring Return from Both

h

Cam Options	
3-Position	
Code	**Operator Function**
KB7	B7 Cam
KC1	C1 Cam
KC7	C7 Cam
KE7	E7 Cam
KQ1	Q1 Cam
KT1	T1 Cam

i, j

Contact Blocks ❹	
Code	**Description**
Blank (both pos.)	No Contacts on operator
Standard	
D	1 N.O.
E	1 N.C.
G	1 N.O.E.M.
J	1 N.C.L.B.
A	1 N.O. - 1 N.C.
X	No Contacts in this position
Pen*TUFF* (Low Voltage)	
H	1 N.O.
U	1 N.C.
I	1 N.O.E.M.
Q	1 N.C.L.B.
F	1 N.O. - 1 N.C.
X	No Contacts in this position

i, j (cont'd)

Contact Blocks ❹	
Code	**Description**
Class 1, Div. 2/Zone 2	
Logic Reed	
V	1 N.O.
W	1 N.C.
T	1 N.O. - 1 N.C.
X	No Contacts in this position
Sealed Switch	
R	1 N.O.
S	1 N.C.
P	1 N.O. - 1 N.C.
X	No Contacts in this position
Stackable Sealed Switch	
5	1 N.O.
6	1 N.C.
7	1 N.O. - 1 N.C.
X	No Contacts in this position

Table 1. Selector Switch Cam Targets

Target			Cam Description (3-Position)					
			KB7	KC1	KC7	KE7	KQ1	KT1
X	O	O	D, H, V, R, 5	—	D, H, V, R, 5	D, H, V	—	E,U,W,S, 6
O	X	O	—	E, U, W, S, 6	E, U, W, S, 6	—	E, U, W, S, 6	—
O	O	X	E, U, W, S, 6	D, H, V, R, 5	—	—	—	D, H, V, R, 5
X	X	O	G, I	J, Q	—	—	—	J, Q
O	X	X	J,Q	—	J,Q	E,U,W,S, 6	—	—
X	O	X	—	G,I	G,I	—	D,H,V,R,5	—

❷ LED only.
❸ LEDs available in red, green, amber, blue, and white. White LEDs only available in 6V, 24V, 120V, and 130V full voltage and all transformer units. LED color matches lens color, except clear lens supplied with white LED and white lens supplied with amber LED. All LEDs except 120V have an internal shunt resistor for use with solid-state outputs.
❹ Contact blocks used on white side only.

Artisan Technology Group - Quality Instrumentation ... Guaranteed | (888) 88-SOURCE | www.artisantg.com

Pilot Light Units❸

Transformer Type Pilot Light
Cat. No. 800T-P16R

Push-to-Test Pilot Light
Cat. No. 800T-PT16R

Transformer Type Pilot Light
Cat. No. 800H-PR16R

Push-to-Test Pilot Light
Cat. No. 800H-PRT16R

Type	Lamp	Volts	Color	Type 4/13		Type 4/4X/13	
				Pilot Light	Push-to-Test ❶	Pilot Light	Push-to-Test ❶
				Cat. No.	Cat. No.	Cat. No.	Cat. No.
Operator Only ❷				800T-S00	800T-SB00XX	800H-SR00	800H-SRB00XX
Full Voltage	Incandescent	24 AC/DC	Red Green Amber	800T-Q24R 800T-Q24G 800T-Q24A	800T-QT24R 800T-QT24G 800T-QT24A	800H-QR24R 800H-QR24G 800H-QR24A	800H-QRT24R 800H-QRT24G 800H-QRT24A
	LED	120 AC	Red Green Amber	800T-QH10R 800T-QH10G 800T-QH10A	800T-QTH10R 800T-QTH10G 800T-QTH10A	800H-QRH10R 800H-QRH10G 800H-QRH10A	800H-QRTH10R 800H-QRTH10G 800H-QRTH10A
		24 AC/DC	Red Green Amber	800T-QH24R 800T-QH24G 800T-QH24A	800T-QTH24R 800T-QTH24G 800T-QTH24A	800H-QRH24R 800H-QRH24G 800H-QRH24A	800H-QRTH24R 800H-QRTH24G 800H-QRTH24A
	No Lamp	0…250 AC/DC	No Lens	800T-QN25	800T-QTN25	800H-QRN25	800H-QRTN25
Transformer	Incandescent	120 AC 50/60 Hz	Red Green Amber	800T-P16R 800T-P16G 800T-P16A	800T-PT16R 800T-PT16G 800T-PT16A	800H-PR16R 800H-PR16G 800H-PR16A	800H-PRT16R 800H-PRT16G 800H-PRT16A
	LED		Red Green Amber	800T-PH16R 800T-PH16G 800T-PH16A	800T-PTH16R 800T-PTH16G 800T-PTH16A	800H-PRH16R 800H-PRH16G 800H-PRH16A	800H-PRTH16R 800H-PRTH16G 800H-PRTH16A
	No Lamp		No Lens	800T-PN16	800T-PTN16	800H-PRN16	800H-PRTN16

❶ Includes one standard 800T-XA (1 N.O. - 1 N.C.) contact block. For typical pilot light wiring diagrams, see page 65.
❷ Operator only supplied without power module, lamp, lens cap, or contact blocks.
❸ All pilot lights, except push-to-test without sealed contacts and dual input transformer relay, are rated for Class 1, Division 2 applications.

	a	b	c	d	e	f	g	h	
800	T		– P			16	R		*(Pilot Lights)*
800	T		– Q	T		24	G	AR	*(Push-to-Test)*

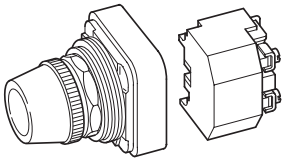

a

Protection Rating	
Code	Description
T	Metal, Type 4/13
H	Plastic, Type 4/4X/13

b

Finger-Safe Guards	
Code	Description
Blank	No Guards
C	Guards on Terminals

c

Power Module Type		
800T Type 4/13	Description	800H Type 4/4X/13
Code		Code
P	Transformer (or Dual Input)	PR
Q	Full Voltage (or Resistor)	QR
R	Neon ❹	RR

❹ Neon is only available in amber or clear.
❺ Diode type dual input provides circuit isolation via opposing diodes. Not recommended for use with solid-state outputs and neon indicators.
❻ Flashing lamps are only available in 6V full voltage units and all transformer units.

d

Lamp Test Options	
Code	Description
Blank	No Test Option
T	Push-to-Test
D	Dual Input — Diode ❺
DT	Dual Input — Transformer Relay
Note: Push-to-Test Pilot Light is supplied with a factory jumpered 800T-XA, 1 N.O.-1 N.C. Contact Block.	

e

Illumination Options	
Transformer/Full Voltage	
Code	Description
Blank	Incandescent
F	Flashing Incandescent ❻
H	LED ❼
Resistor/Neon	
Blank	No Options
Dual Input	
Blank	Incandescent
H	LED ❼

❼ LEDs available in red, green, amber, blue, and white. White LEDs only available in 6V, 24V, 120V, and 130V full voltage and all transformer units. LED color matches lens color, except clear lens supplied with white LED and white lens supplied with amber LED. All LEDs except 120V have an internal shunt resistor for use with solid-state outputs.

f

Voltage	
Transformer	
Code	Description
36	48V AC 50/60 Hz
16	120V AC 50/60 Hz
26	240V AC 50/60 Hz
76	277V AC 50/60 Hz
46	480V AC 50/60 Hz
56	600V AC 50/60 Hz
Full Voltage	
06	6V AC/DC
12	12V AC/DC
24	24V AC/DC
32	32V AC/DC ❽
48	48V AC/DC
10	120V AC/DC ❾
13	130V AC/DC ❽
20	240V AC/DC ❽
Resistor	
11	120V AC/DC Resistor
Neon	
10	120V AC/DC
20	240V AC/DC
Dual Input	
16	120V AC
24	24V AC/DC (Dual input diode only)

❽ 32V and 130V are LED only. 240V is incandescent only.
❾ 120V LED is AC only and does not contain internal shunt resistor. For AC/DC and internal shunt resistor, order 130V AC/DC LED (Code 13).

g

Lens Color		
Plastic Code	Color	Glass Code ❿
Blank	No Lens	Blank
A	Amber	D
B	Blue	E
C	Clear	F
G	Green	H
R	Red	J
W	White	K

h

Contact Blocks (Push-to-test units only)	
Code	Description
Standard	
Blank	1 N.O. - 1 N.C.
Pen*TUFF* (Low Voltage)	
AV	1 N.O. - 1 N.C.
Class 1, Div. 2/Zone 2	
Logic Reed	
AR	1 N.O. - 1 N.C.
Sealed Switch	
AP	1 N.O. - 1 N.C.
Stackable Sealed Switch	
AY	1 N.O. - 1 N.C.

❿ Glass lens available on 800T pilot lights only. Not available on 800T push-to-test units oro on 800H devices.

Artisan Technology Group - Quality Instrumentation ... Guaranteed | (888) 88-SOURCE | www.artisantg.com

2-Position Push-Pull and Push-Pull/Twist Release Units, Non-Illuminated

Note: A jumbo or large legend plate is recommended, if space allows.

2-Position Push-Pull
Cat. No. 800T-FX6D4

2-Position Push-Pull/Twist
Cat. No. 800T-FXT6D4

2-Position Push-Pull/Twist
Cat. No. 800H-FRXT6D4

Contact Type	Operator Position: Maintained Out	Operator Position: Maintained In	Button Color	Type 4/13 Push-Pull Cat. No.	Type 4/13 Push-Pull/Twist Release Cat. No.	Type 4/4X/13 Push-Pull/Twist Release Cat. No.
N.C.L.B.	X	O	Red	800T-FX6D4 ❷	800T-FXT6D4 ❷	800H-FRXT6D4 ❷
N.O. - N.C.L.B. ❶	O X	X O		800T-FX6A1 ❷	800T-FXT6A1 ❷	800H-FRXT6A1 ❷
N.C.L.B. - N.C.L.B. ❶	X X	O O		800T-FX6A5 ❷	800T-FXT6A5 ❷	800H-FRXT6A5 ❷

Note: X = Closed/O = Open

❶ Normally closed late break contact. When button is pushed from the OUT to IN position, the mechanical detent action of the operator occurs before electrical contacts change state. When the button is pulled from the IN to the OUT position, the electrical contacts change state before the mechanical detent occurs.

❷ Meets EN-418 and IEC 60947-5-5 standards for emergency stop applications.

800 T ___ – FX 1 A1
a b c d e

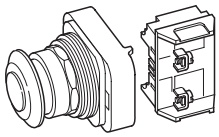

a

Protection Rating	
Code	**Description**
T	Metal, Type 4/13
H	Plastic, Type 4/4X/13

b

Finger-Safe Guards	
Code	**Description**
Blank	No Guards
C	Guards on Terminals

c

Head Type ❸		
800T Type 4/13 Code	**Description**	**800H Type 4/4X/13 Code**
FX	Mushroom Head (Push-Pull)	—
FXJ	Jumbo Mushroom Head (Push-Pull)	—
FXT	Push-Pull/Twist to Release	FRXT
FXJT	Jumbo Head Push-Pull w/ Twist to Release	FRXJT

d

Color Cap	
Code	**Color**
Blank	No Cap ❹
1	Green
2	Black
3	Orange
4	Gray
5	White
6	Red
7	Blue
9	Yellow

e

Contact Block(s)			
Code	**Operator Position: Out**	**Operator Position: In**	**Description**
Blank	—	—	No Contacts on operator
Standard			
D1	O	X	1 N.O.
D2	X	O	1 N.C.
D4	X	O	1 N.C.L.B.
A	O X	X O	1 N.O. - 1 N.C.
A1	O X	X O	1 N.O. - 1 N.C.L.B.
A5	X X	O O	2 N.C.L.B.

e (cont'd)

Contact Block(s)			
Code	**Operator Position: Out**	**Operator Position: In**	**Description**
Blank	—	—	No Contacts on operator
Pen*TUFF* (Low Voltage)			
D1V	O	X	1 N.O.
D2V	X	O	1 N.C.
D4V	X	O	1 N.C.L.B.
AV	O X	X O	1 N.O. - 1 N.C.
Class 1, Div. 2/Zone 2			
Logic Reed			
D1R	O	X	1 N.O.
D2R	X	O	1 N.C.
AR	O X	X O	1 N.O. - 1 N.C.
Sealed Switch			
D1P	O	X	1 N.O.
D2P	X	O	1 N.C.
AP	O X	X O	1 N.O. 1 N.C.
Stackable Sealed Switch			
D1Y	O	X	1 N.O.
D2Y	X	O	1 N.C.
AY	O X	X O	1 N.O. - 1 N.C.

Note: X = Closed/O = Open

❸ 2-position push-pull and push-pull/twist-to-release devices with N.C.L.B. contacts meet EN-418 and IEC 60947-5-5 standards for emergency stop applications.

❹ Not valid with head Type **J** or **JT**.

Accessories — Page 46
Legend Plates — Page 59
Approximate Dimensions — Page 65

Artisan Technology Group - Quality Instrumentation ... Guaranteed | (888) 88-SOURCE | www.artisantg.com

3-Position Push-Pull Units, Non-Illuminated

Note: A jumbo or large legend plate is recommended, if space allows.

3-Position Push-Pull
Cat. No. 800T-FXM6A7

3-Position Push-Pull
Cat. No. 800H-FRXM6A7

Contact Type	Operator Position			Operator Position		
	Momentary	Maintained	Maintained	Momentary	Maintained	Momentary
	Out	Center	In	Out	Center	In
N.C.-	X	O	O	X	O	O
N.C.L.B. ❶	X	X	O	X	X	O

Button Color	Type 4/13	Type 4/4X/13	Type 4/13	Type 4/4X/13
	Push-Pull	Push-Pull	Push-Pull	Push-Pull
	Cat. No.	Cat. No.	Cat. No.	Cat. No.
Red	800T-FXM6A7	800H-FRXM6A7	800T-FXN6A7	800H-FRXN6A7

Note: X = Closed/O = Open

❶ Normally closed late break contact. When button is pushed from the OUT to IN position, the mechanical detent action of the operator occurs before electrical contacts change state. When the button is pulled from the IN to the OUT position, the electrical contacts change state before the mechanical detent occurs.

800 T ___ – FX M 1 A7
a b c d e f

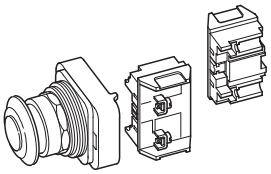

a

Protection Rating	
Code	Description
T	Metal, Type 4/13
H	Plastic, Type 4/4X/13

b

Finger-Safe Guards	
Code	Description
Blank	No Guards
C	Guards on Terminals

c

Head Type ❷		
800T Type 4/13	Description	800H Type 4/4X/13
Code		Code
FX	Mushroom Head (Push-Pull)	FRX
FXJ	Jumbo Mushroom Head (Push-Pull)	FRXJ

d

Operator Function			
Code	Operator Position		
	Out	Center	In
M	Momentary	Maintained	Maintained
N	Momentary	Maintained	Momentary

e

Color Cap	
Code	Color
Blank	No Cap ❸
1	Green
2	Black
3	Orange
4	Gray
5	White
6	Red
7	Blue
9	Yellow

f

Contact Block(s)				
Code	Operator Position			Description
	Out	Ctr.	In	
Blank	—	—	—	No Contacts on Operator
Standard				
A	O X	O O	X O	1 N.O. - 1 N.C.
A1	O X	O X	X O	1 N.O. - 1 N.C.L.B.
A7	X X	O X	O O	1 N.C. - 1 N.C.L.B.
B6	X X	O X	O O	2 N.C. - 2 N.C.L.B.
Pen*TUFF* (Low Voltage)				
AV	O X	O O	X O	1 N.O. - 1 N.C.
A7V	X X	O X	O O	1 N.C. - 1 N.C.L.B.

f (cont'd)

Contact Block(s)				
Code	Operator Position			Description
	Out	Ctr.	In	
Class 1, Div. 2/Zone 2				
Logic Reed				
AR	O X	O O	X O	1 N.O. - 1 N.C.
Sealed Switch				
AP	O X	O O	X O	1 N.O. - 1 N.C.
Stackable Sealed Switch				
AY	O X	O O	X O	1 N.O. - 1 N.C.

Note: X = Closed/O = Open

❷ 3-position push-pull and push-pull/twist-to-release devices with N.C.L.B. contacts meet EN-418 and IEC 60947-5-5 standards for emergency stop applications.
❸ Not valid with head Type **J**.

Accessories — Page 46
Legend Plates — Page 59
Approximate Dimensions — Page 65

Artisan Technology Group - Quality Instrumentation ... Guaranteed | (888) 88-SOURCE | www.artisantg.com

2-Position Push-Pull and Push-Pull/Twist Release Units, Illuminated

Illuminated 2-Position Push-Pull
Cat. No. 800T-FXP16RA1

Illuminated 2-Position Push-Pull/Twist
Cat. No. 800T-FXTP16RA1

Illuminated 2-Position Push-Pull/Twist
Cat. No. 800H-FRXTP16RA1

Type	Lamp	Volts	Color	Operator Position			Type 4/13		Type 4/4X/13
				Maintained		Maintained	Push-Pull	Push-Pull/ Twist Release	Push-Pull/ Twist Release
				Contacts	Out	In	Cat. No.	Cat. No.	Cat. No.
Operator Only ❶				No Contacts			800T-FXS00X	800T-FXTS00X	800H-FRXTS00X
Full Voltage	Incandescent	24 AC/DC	Red	N.O. - N.C.L.B. ❷	O	X	800T-FXQ24RA1 ❸	800T-FXTQ24RA1 ❸	800H-FRXTQ24RA1 ❸
	LED	120 AC			X	O	800T-FXQH10RA1 ❸	800T-FXTQH10RA1 ❸	800H-FRXTQH10RA1 ❸
		24 AC/DC					800T-FXQH24RA1 ❸	800T-FXTQH24RA1 ❸	800H-FRXTQH24RA1 ❸
	No Lamp	0…250 AC/DC	No Lens				800T-FXQN25XA1 ❸	800T-FXTQN25XA1 ❸	800H-FRXTQN25XA1 ❸
Transformer	Incandescent	120 AC	Red	N.O. - N.C.L.B. ❷	O	X	800T-FXP16RA1 ❸	800T-FXTP16RA1 ❸	800H-FRXTP16RA1 ❸
	LED	120 AC			X	O	800T-FXPH16RA1 ❸	800T-FXTPH16RA1 ❸	800H-FRXTPH16RA1 ❸
	No Lamp	0…250 AC/DC	No Lens				800T-FXPN16XA1 ❸	800T-FXTPN16XA1 ❸	800H-FRXTPN16XA1 ❸

Note: X = Closed/O = Open

❶ Operator only supplied without power module, lamp, lens cap, or contact blocks.
❷ Normally closed late break contact. When button is pushed from the OUT to IN position, the mechanical detent action of the operator occurs before electrical contacts change state. When the button is pulled from the IN to the OUT position, the electrical contacts change state before the mechanical detent occurs.
❸ Meets EN-418 and IEC 60947-5-5 standards for emergency stop applications.

800 T ___ – FX T PH 16 R A1
a b c d e f g h

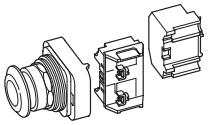

a

Protection Rating	
Code	Description
T	Metal, Type 4/13
H	Plastic, Type 4/4X/13

b

Finger-Safe Guards	
Code	Description
Blank	No Guards
C	Guards on Terminals

c

Head Type ❹		
800T Type 4/13 Code	Description	800H Type 4/4X/13 Code
FX	Mushroom Head	FRX
FXJ	Jumbo Mushroom Head	FRXJ

d

Operator Function	
2-Position	
Code	Description
Blank	Push-Pull
T	Push-Pull/Twist

e

Illumination Options	
Transformer	
Code	Description
P	Incandescent
PH	LED ❺
Full Voltage	
Q	Incandescent
QH	LED ❺

e (cont'd)

Illumination Options	
Code	Description
Resistor	
Q	Incandescent
Neon	
R	Neon ❻
Dual Input	
D	Diode Type ❼
DH	Diode Type LED ❺❼
DT	Transformer — Relay Type
DTH	Transformer — Relay Type LED ❺

f

Voltage	
Transformer	
Code	Description
36	48V AC 50/60 Hz
16	120V AC 50/60 Hz
26	240V AC 50/60 Hz
76	277V AC 50/60 Hz
46	480V AC 50/60 Hz
56	600V AC 50/60 Hz
Full Voltage	
06	6V AC/DC
12	12V AC/DC
24	24V AC/DC
32	32V AC/DC ❽
48	48V AC/DC
10	120V AC/DC ❾
13	130V AC/DC ❽
20	240V AC/DC ❽
Resistor	
11	120V AC/DC Resistor
Neon	
10	120V AC/DC
20	240V AC/DC
Dual Input	
16	120V AC
24	24V AC/DC (Dual input diode only)

g

Color Cap	
Code	Color
X	No Cap ❿
A	Amber
B	Blue
C	Clear
G	Green
R	Red
W	White

h

Contact Blocks	
Code	Description
Blank	No Contacts on operator
Standard	
D1	1 N.O.
D2	1 N.C.
D4	1 N.C.L.B.
A	1 N.O. - 1 N.C.
A1	1 N.O. - 1 N.C.L.B.
A5	2 N.C.L.B.
Pen*TUFF* (Low Voltage)	
D1V	1 N.O.
D2V	1 N.C.
D4V	1 N.C.L.B.
AV	1 N.O. - 1 N.C.
A1V	1 N.O. - 1 N.C.L.B.
Class 1, Div. 2/Zone 2	
Logic Reed	
D1R	1 N.O.
D2R	1 N.C.
AR	1 N.O. - 1 N.C.
Sealed Switch	
D1P	1 N.O.
D2P	1 N.C.
AP	1 N.O. - 1 N.C.

h (cont'd)

Contact Blocks	
Code	Description
Stackable Sealed Switch	
D1Y	1 N.O.
D2Y	1 N.C.
AY	1 N.O. - 1 N.C.

Simple 2-Position Switch		
Contact		
N.O.	O	X
N.C./N.C.L.B.	X	O

❹ 2-position push-pull and push-pull/twist-to-release devices with N.C.L.B. contacts meet EN-418 and IEC 60947-5-5 standards for emergency stop applications.
❺ LEDs available in red, green, amber, blue, and white. White LEDs only available in 6V, 24V 120V, and 130V full voltage and all transformer units. LED color matches lens color, except clear lens supplied with white LED and white lens supplied with amber LED. All LEDs except 120V have an internal shunt resistor for use with solid-state outputs.
❻ Neon is available in amber or clear.
❼ Diode type dual input provides circuit isolation via opposing diodes. Not recommended for use with solid-state outputs and neon indicators.
❽ 32V and 130V are LED only. 240V is incandescent only.
❾ 120V LED is AC only and does not contain internal shunt resistor. For AC/DC and internal shunt resistor, order 130V AC/DC LED (code 13).
❿ Not valid with head Type **J**.

Accessories — Page 46
Lamp Information — Page 58
Legend Plates — Page 59
Approximate Dimensions — Page 65

Artisan Technology Group - Quality Instrumentation ... Guaranteed | (888) 88-SOURCE | www.artisantg.com

3-Position Push-Pull Units, Illuminated

Illuminated 3-Position Push-Pull
Cat. No. 800T-FXMP16RA7

Illuminated 3-Position Push-Pull
Cat. No. 800H-FRXMP16A7

	Operator Position			Operator Position		
	Momentary	Maintained	Maintained	Momentary	Maintained	Momentary
Contacts	**Out**	**Center**	**In**	**Out**	**Center**	**In**
N.C.-	X	O	O	X	O	O
N.C.L.B. ❶	X	X	O	X	X	O

Type	Lamp	Volts	Color	Type 4/13 Push-Pull Cat. No.	Type 4/4x/13 Push-Pull Cat. No.	Type 4/13 Push-Pull Cat. No.	Type 4/4x/13 Push-Pull Cat. No.
Operator Only ❷				800T-FXMS00X	800H-FRXMS00X	800T-FXNS00X	800H-FRXNS00X
Full Voltage	Incandescent	24 AC/DC	Red	800T-FXMQ24RA7	800H-FRXMQ24RA7	800T-FXNQ24RA7	800H-FRXNQ24RA7
	LED	120 AC		800T-FXMQH10RA7	800H-FRXMQH10RA7	800T-FXNQH10RA7	800H-FRXNQH10RA7
		24 AC/DC		800T-FXMQH24RA7	800H-FRXMQH24RA7	800T-FXNQH24RA7	800H-FRXNQH24RA7
	No Lamp	0…250 AC/DC	No Lens	800T-FXMQN25XA7	800H-FRXMQN25XA7	800T-FXNQN25XA7	800H-FRXNQN25XA7
Transformer	Incandescent	120 AC	Red	800T-FXMP16RA7	800H-FRXMP16RA7	800T-FXNP16RA7	800H-FRXNP16RA7
	LED	120 AC		800T-FXMPH16RA7	800H-FRXMPH16RA7	800T-FXNPH16RA7	800H-FRXNPH16RA7
	No Lamp	120 AC	No Lens	800T-FXMPN16XA7	800H-FRXMPN16XA7	800T-FXNPN16XA7	800H-FRXNPN16XA7

Note: X = Closed/O = Open

❶ Normally closed late break contact. When button is pushed from the OUT to IN position, the mechanical detent action of the operator occurs before electrical contacts change state. When the button is pulled from the IN to the OUT position, the electrical contacts change state before the mechanical detent occurs.

❷ Operator only supplied without power module, lamp, lens cap, or contact blocks.

800 T — – FX M PH 16 R A7

a b c d e f g h

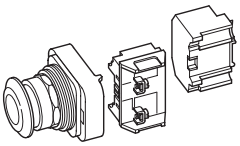

a

Protection Rating	
Code	**Description**
T	Metal, Type 4/13
H	Plastic, Type 4/4X/13

b

Finger-Safe Guards	
Code	**Description**
Blank	No Guards
C	Guards on Terminals

c

Head Type ❸		
800T Type 4/13 Code	**Description**	**800H Type 4/4X/13 Code**
FX	Mushroom Head	FRX
FXJ	Jumbo Mushroom Head	FRXJ

d

Operator Function			
3-Position			
Code	Operator Position		
	Out	Ctr.	In
M	★	‡	‡
N	★	‡	★
★ Momentary ‡ Maintained			

e

Illumination Options	
Transformer	
Code	**Description**
P	Incandescent
PH	LED ❹

e (cont'd)

Illumination Options	
Full Voltage	
Code	**Description**
Q	Incandescent
QH	LED ❹
Resistor	
Q	Incandescent
Neon	
R	Neon ❺
Dual Input	
D	Diode Type ❻
DH	Diode Type LED ❹❻
DT	Transformer — Relay Type
DTH	Transformer — Relay Type LED ❹

f

Voltage	
Transformer	
Code	**Description**
16	120V AC 50/60 Hz
26	240V AC 50/60 Hz
Other voltages available	
Full Voltage	
06	6V AC/DC
12	12V AC/DC
24	24V AC/DC
32	32V AC/DC ❼
48	48V AC/DC
10	120V AC/DC ❽
13	130V AC/DC ❼
20	240V AC/DC ❼
Resistor	
11	120V AC/DC Resistor
Neon	
10	120V AC/DC
20	240V AC/DC

f (cont'd)

Voltage	
Full Voltage	
Code	**Description**
Dual Input	
16	120V AC
24	24V AC/DC (Dual input diode only)

g

Color Cap	
Code	**Color**
X	No Cap ❾
A	Amber
B	Blue
C	Clear
G	Green
R	Red
W	White

h

Contact Blocks	
Code	**Description**
Blank	No Contacts on operator
Standard	
A	1 N.O. - 1 N.C.
A1	1 N.O. - 1 N.C.L.B.
A7	1 N.C. - 1 N.C.L.B.
Pen*TUFF* (Low Voltage)	
AV	1 N.O. - 1 N.C.
A7V	1 N.C. - 1 N.C.L.B.
Class 1, Div. 2/Zone 2	
Logic Reed	
AR	1 N.O. - 1 N.C.

h (cont'd)

Contact Blocks	
Code	**Description**
Sealed Switch	
AP	1 N.O. - 1 N.C.
Stackable Sealed Switch	
AY	1 N.O. - 1 N.C.

Simple 3-position Switch			
Contact			
N.O.	O	O	X
N.C.	X	O	O
N.C.L.B.	X	X	O

❸ 2-position push-pull & push-pull/twist-to-release devices with N.C.L.B. contacts meet EN-418 and IEC 60947-5-5 stan- dards for emergency stop applications.

❹ LEDs available in red, green, amber, blue, and white. White LEDs only available in 6V, 24V 120V, and 130V full voltage and all transformer units. LED color matches lens color, except clear lens supplied with white LED and white lens supplied with amber LED. All LEDs except 120V have an internal shunt resistor for use with solid-state outputs.

❺ Neon is available in amber or clear.

❻ Diode type dual input provides circuit isolation via opposing diodes. Not recommended for use with solid-state outputs and neon indicators.

❼ 32V and 130V are LED only. 240V is incandescent only.

❽ 120V LED is AC only and does not contain internal shunt resistor. For AC/DC and internal shunt resistor, order 130V AC/DC LED (code 13).

❾ Not valid with head Type **J**.

Artisan Technology Group - Quality Instrumentation ... Guaranteed | (888) 88-SOURCE | www.artisantg.com

Potentiometer Units ❶

Potentiometer Unit
Cat. No. 800T-U24

Potentiometer Unit
Cat. No. 800H-UR4

Resistance	Type 4/13 Potentiometer ❷ Cat. No.	Type 4/4X/13 Potentiometer ❷ Cat. No.	Resistance	Type 4/13 Potentiometer ❷ Cat. No.	Type 4/4X/13 Potentiometer ❷ Cat. No.
Operator Only (Without Resistive Element)	800T-N37 ❸	800H-N102 ❸	25 kΩ	800T-U37	800H-UR37
			50 kΩ	800T-U41	800H-UR41
150 Ω	800T-U4	800H-UR4	75 kΩ	800T-U46	800H-UR46
500 Ω	800T-U12	800H-UR12	0.1 MΩ	800T-U49	800H-UR49
1000 Ω	800T-U13	800H-UR13	0.15 MΩ	800T-U50	800H-UR50
1500 Ω	800T-U16	800H-UR16	0.4 MΩ	800T-U54	800H-UR54
2500 Ω	800T-U19	800H-UR19	0.5 MΩ	800T-U55	800H-UR55
5000 Ω	800T-U24	800H-UR24	1 MΩ	800T-U57	800H-UR57
10 kΩ	800T-U29	800H-UR29	2 MΩ	800T-U59	800H-UR59
15 kΩ	800T-U34	800H-UR34	3 MΩ	800T-U62	800H-UR62
20 kΩ	800T-U35	800H-UR35	4 MΩ	800T-U64	800H-UR64

❶ Single turn operation with 312 degree rotation.
❷ Rated for 300V AC/DC 2 W maximum. Specify Bulletin 800TC or 800HC for finger-safe potentiometers. Example: **Cat. No. 800T-U29** becomes **800TC-U29**.
❸ For use with Type J potentiometers having a shaft length of 7/8" (22.2 mm) and a shaft diameter of 1/4" (6.3 mm).

Mechanically Interlocked Maintained Push Button Units

Cat. No. 800T-FA22A

Cat. No. 800T-FB16A

Cat. No. 800T-FC16F

Cat. No. 800H-CRA22A

Contact Arrangement		Type 4/13 Button Position: Button Type/Color			Type 4/4X/13 Booted ❹	Type 4/4X/13 Bootless	
Type	Configuration/ Position	Upper: Flush/Black Lower: Flush/Black Cat. No.	Upper: Flush/Green Lower: Extended/ Red Cat. No.	Upper: Flush/Green Lower: Mushroom/ Red Cat. No.	Upper: Flush/Black Lower: Flush/Black Cat. No.	Upper: Flush/Green Lower: Extended/ Red Cat. No.	Upper: Flush/Black Lower: Flush/Black Cat. No.
1 N.O. - 1 N.C.		800T-FA22A	800T-FB16A	800T-FC16A	800H-FRA22A	800H-CRB16A	800H-CRA22A
2 N.O. - 2 N.C.	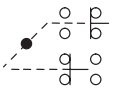	800T-FA22F	800T-FB16F	800T-FC16F	800H-FRA22F	800H-CRB16F	800H-CRA22F
No Contact	—	800T-FA22	800T-FB16	800T-FC16	800H-FRA22	800H-CRB16	800H-CRA22

❹ Boot material is hypalon with brass thredded-insert. See page 51for additional boot materials.

Artisan Technology Group - Quality Instrumentation ... Guaranteed | (888) 88-SOURCE | www.artisantg.com

Cluster Pilot Light Units (800T only) ❶

Color Cap Only With Lamps
Cat. No. 800T-N249

Complete Unit
Cat. No. 800T-PC416

Type	Lamp	Volts	Type 4/13 Color Cap With Lamps Cat. No.	Type 4/13 Complete Unit Cat. No.
2 Light (green, red)	Incandescent	24 AC/DC Full Voltage	800T-N257	800T-QC224
	LED		800T-N257L	800T-QCL224
	Incandescent	120 AC 50/60 Hz Transformer	800T-N52	800T-PC216
	LED		800T-N52L	800T-PCL216
3 Light (white, green, red)	Incandescent	24 AC/DC Full Voltage	800T-N254	800T-QC324
	LED		800T-N254L	800T-QCL324
	Incandescent	120 AC 50/60 Hz Transformer	800T-N51	800T-PC316
	LED		800T-N51L	800T-PCL316
4 Light (blue, green, red, clear)	Incandescent	24 AC/DC Full Voltage	800T-N251	800T-QC424
		120 AC 50/60 Hz Transformer	800T-N50	800T-PC416

Cluster Pilot Light Units

Position 2
Position 1
Position 3
Position 4

800T ___ – **PC** **3** **16** **W** **R** **X** **R**

a *b* *c* *d* *e* *f* *g* *h*

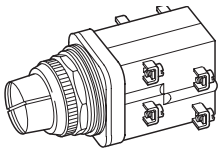

a

Finger-Safe Guards	
Code	Description
Blank	No Guards
C	Guards on Terminals

b

Power Module Type	
Code	Description
QC	Full Voltage
PC	Transformer

c

Illumination Options and No. of Units	
Full Voltage ❶	
Incandescent	
Code	Description
2	2 Unit Cluster
3	3 Unit Cluster
4	4 Unit Cluster
LED ❷❸❹❺	
L2	2 Unit Cluster
L3	3 Unit Cluster
L4	4 Unit Cluster

d

Voltage Options	
Full Voltage	
Code	Description
06	6V AC/DC
12	12V AC/DC
24	24V AC/DC
Transformer	
16	120V AC 50/60 Hz

e, f, g, h

Color Options	
Code	Color
Blank (All 4 Positions)	Standard Unit ❻
X	No Color
A	Amber
B	Blue
C	Clear
G	Green
R	Red
W	White

Custom Lens Caps for Cluster Pilot Lights

Position 2
Position 1
Position 3
Position 4

800T – N249 ___ **R** **G** **A** **W**

a *b* *c* *d* *e* *f*

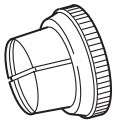

a

No. of Lamps/Voltage	
Transformer	
Code	Description
N50	4 Lamps, 120V AC 50/60 Hz
N51	3 Lamps, 120V AC 50/60 Hz
N52	2 Lamps, 120V AC 50/60 Hz
N249	4 Lamps, 6V AC/DC
N250	4 Lamps, 12V AC/DC
N251	4 Lamps, 24V AC/DC
N252	3 Lamps, 6V AC/DC
N253	3 Lamps, 12V AC/DC
N254	3 Lamps, 24V AC/DC
N255	2 Lamps, 6V AC/DC
N256	2 Lamps, 12V AC/DC
N257	2 Lamps, 24V AC/DC

b

Illumination Options	
Code	Description
Blank	Incandescent
L	LED ❷

c, d, e, f

Code	Color
Blank (All Positions)	Standard Unit ❻
A	Amber
B	Blue
C	Clear
G	Green
R	Red
W	White
X	No Color

❶ Rated type 4/13 indoor only.
❷ LEDs are available in red, green and amber; lens color matches LED color. Exception: the white lens is supplied with an amber LED.
❸ White lenses use amber LEDs.
❹ LEDs could be adversely affected when used with solid-state outputs.
❺ 6V and 12V are positive polarity. 24V LEDs are bipolar.
❻ See table above for standard unit colors.

Artisan Technology Group - Quality Instrumentation ... Guaranteed | (888) 88-SOURCE | www.artisantg.com

1-2-3-4 Way Toggle Switches (800T Only)

2 Way Toggle Switch
Cat. No. 800T-T2H1EEXX

Switch Type	Lever Movement	Handle Position: Up	Left	Center	Right	Down	Type 4/13 Spring Return Operation Cat. No.	Type 4/13 Maintained Operation Cat. No.
2 Way	↕	X	—	O	—	O	800T-T2H3EEXX	800T-T2H1EEXX
		O	—	O	—	X		
	↔	—	X	O	O	—	800T-T2F3DDXX	800T-T2F1DDXX
		—	O	O	X	—		
4 Way	✚	X	O	O	O	O	800T-T4T8AAXX	800T-T4R1AAXX
		O	X	O	O	O		
		O	O	O	X	O		
		O	O	O	O	X		

Note: X = Closed/O = Open

800T ___ – **T2** **H2** **E** **E** **X** **X**

a *b* *c* *d* *e* *f* *g*

Right Side — Left Side — Right Side — Left Side

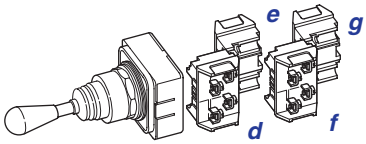

a

Finger-Safe Guards	
Code	**Description**
Blank	No Guards
C	Guards on Terminals

b

Operator Type	
Code	**Description**
T1	1 Way Toggle
T2	2 Way Toggle
T3	3 Way Toggle
T4	4 Way Toggle

c

Lever Movement and Function

Type	Function Code		Description (M = Maintained, S = Spring Return): ↑	←	→	↓
1 Way	A	1	M	—	—	—
		2	S	—	—	—
	B	1	—	M	—	—
		2	—	S	—	—
	C	1	—	—	M	—
		2	—	—	S	—
	D	1	—	—	—	M
		2	—	—	—	S
2 Way	E	1	M	M	—	—
		2	M	S	—	—
		3	S	S	—	—
		4	S	M	—	—
	F	1	—	M	M	—
		2	—	M	S	—
		3	—	S	S	—
		4	—	S	M	—
2 Way	G	1	—	—	M	M
		2	—	—	M	S
		3	—	—	S	S
		4	—	—	S	M
	H	1	M	—	—	M
		2	M	—	—	S
		3	S	—	—	S
		4	S	—	—	M
2 Way	J	1	M	—	M	—
		2	M	—	S	—
		3	S	—	S	—
		4	S	—	M	—
	K	1	—	M	—	M
		2	—	M	—	S
		3	—	S	—	S
		4	—	S	—	M

c (cont'd)

Lever Movement and Function

Type	Function Code		Description (M = Maintained, S = Spring Return): ↑	←	→	↓
3 Way	L	1	M	M	M	—
		2	M	M	S	—
		3	M	S	M	—
		4	M	S	S	—
		5	S	M	M	—
		6	S	S	M	—
		7	S	M	S	—
		8	S	S	S	—
	N	1	—	M	M	M
		2	—	M	M	S
		3	—	M	S	M
		4	—	M	S	S
		5	—	S	M	M
		6	—	S	S	M
		7	—	S	M	S
		8	—	S	S	S
3 Way	P	1	M	—	M	M
		2	M	—	M	S
		3	M	—	S	M
		4	M	—	S	S
		5	S	—	M	M
		6	S	—	S	M
		7	S	—	M	S
		8	S	—	S	S
	Q	1	M	M	—	M
		2	M	M	—	S
		3	M	S	—	M
		4	M	S	—	S
		5	S	M	—	M
		6	S	S	—	M
		7	S	M	—	S
		8	S	S	—	S
4 Way	R	1	M	M	M	M
		2	M	M	M	S
		3	M	M	S	M
		4	M	M	S	S
		5	M	S	M	M
		6	M	S	S	M
		7	M	S	M	S
		8	M	S	S	S
	T	1	S	M	M	M
		2	S	M	M	S
		3	S	M	S	M
		4	S	M	S	S
		5	S	S	M	M
		6	S	S	S	M
		7	S	S	M	S
		8	S	S	S	S

d, e, f, g

Contact Blocks	
Code	**Description**
Blank (all pos.)	No Contacts on operator
Standard	
D	1 N.O.
E	1 N.C.
G	1 N.O.E.M.
J	1 N.C.L.B.
A	1 N.O. - 1 N.C.
X	No Contacts in this position
Pen*TUFF* (Low Voltage)	
H	1 N.O.
U	1 N.C.
I	1 N.O.E.M.
Q	1 N.C.L.B.
F	1 N.O. - 1 N.C.
X	No Contacts in this position
Class 1, Div. 2/Zone 2 Logic Reed	
V	1 N.O.
W	1 N.C.
T	1 N.O. - 1 N.C.
X	No Contacts in this position

d, e, f, g (cont'd)

Contact Blocks	
Code	**Description**
Blank (all pos.)	No Contacts on operator
Sealed Switch	
R	1 N.O.
S	1 N.C.
P	1 N.O. - 1 N.C.
X	No Contacts in this position
Stackable Sealed Switch	
5	1 N.O.
6	1 N.C.
7	1 N.O. - 1 N.C.
X	No Contacts in this position

Table 1. Contact Block Code

Contact Block Substitution	
Combination	**Code**
Standard	
D + E	A
D + D	M ❶
E + E	N
J + D	B
J + E	C

❶ **XA2** and **XA2R** contact blocks cannot be stacked upon, but they can stack on other contact blocks.

Table 2. 1-2-3-4 Way Toggle Switch Cam Targets

Contact Configuration Position: Up	Left	Center	Right	Down	Suffix Code Contact/Side: Right Side	Left Side
O	X	O	O	O	D, H, V, R, 5	—
O	O	O	O	X	E, U, W, S, 6	—
X	O	X	X	X	J, Q	—
X	X	X	X	O	G, I	—
X	O	O	O	O	—	E, U, W, S, 6
O	O	O	X	O	—	D, H, V, R, 5
O	X	X	X	X	—	G, I
X	X	X	O	X	—	J, Q

Artisan Technology Group - Quality Instrumentation ... Guaranteed | (888) 88-SOURCE | www.artisantg.com

Selector Push Button Units (800T Only)

Selector Push Button
Cat. No. 800T-K2AAXX

Contact Type	Color/Type	Contact Position	Selector Sleeve Left		Selector Sleeve Right		Type 4/13 Selector Push Button
			Button Free	Button Depressed	Button Free	Button Depressed	Cat. No.
1 N.O.	Flush/Black	Right	O	X	O	O	800T-KE2DEXX
1 N.C.		Left	O	O	X	O	
2 N.O. - 2 N.C.	Flush/Black	Right	O O	X O	O X	X O	800T-K2AAXX
		Left	O O	X O	O X	X O	
2 N.O. - 2 N.C.	Flush/Black	Right	O X	X O	O X	O X	800T-KC2AAXX
		Left	O X	O X	O X	X O	

Note: X = Closed/O = Open

800T ____ – **KD** **2** **G** **J** **D** **E**

a	b	c	d	e	f	g
			Right Side	Left Side	Right Side	Left Side

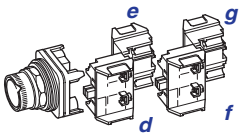

a

Finger-Safe Guards	
Code	**Description**
Blank	No Guards
C	Guards on Terminals

b

Cam and Head Type	
Code	**Description**
K	A Cam with Flush Operator
KA	A Cam with Extended Operator
KB	B Cam with Flush Operator
KC	C Cam with Flush Operator
KD	D Cam with Flush Operator
KE	E Cam with Flush Operator
Note: See Table 1 for Target description of each cam.	

c

Color Cap	
Code	**Color**
1	Green
2	Black
6	Red

d, e, f, g

Contact Blocks	
Code	**Description**
Blank (all pos.)	No Contacts on operator
Standard	
D	1 N.O.
E	1 N.C.
G	1 N.O.E.M.
J	1 N.C.L.B.
A	1 N.O. - 1 N.C.
B	1 N.C.L.B. - 1 N.O.
C	1 N.C.L.B. - 1 N.C.
X	No Contacts in this position

d, e, f, g (cont'd)

Contact Blocks	
Code	**Description**
Pen*TUFF* (Low Voltage)	
H	1 N.O.
U	1 N.C.
I	1 N.O.E.M.
Q	1 N.C.L.B.
F	1 N.O. - 1 N.C.
X	No Contacts in this position
Note: See Table 1 for Target description and Table 2 for Contact Block Reduction Rules.	
Class 1, Div. 2/Zone 2	
Logic Reed	
V	1 N.O.
W	1 N.C.
T	1 N.O. - 1 N.C.
X	No Contacts in this position
Sealed Switch	
R	1 N.O.
S	1 N.C.
P	1 N.O. - 1 N.C.
X	No Contacts in this position
Stackable Sealed Switch	
5	1 N.O.
6	1 N.C.
7	1 N.O. - 1 N.C.
X	No Contacts in this position

Table 1. Selector Push Button Cam Targets (**Note:** X = Closed/O = Open)

Sleeve Position				Cam Description									
				KA/K		KB		KC		KD		KE	
Button free	Button Pressed	Button free	Button Pressed	Contact Block Side									
				Right	Left	Right	Left	Right	Left	Right	Left	Right	Left
O	O	O	X	—	—	—	D, H, V, R, 5	—	D, H, V, R, 5	—	—	—	—
O	O	X	O	E, U, W, S, 6	E, U, W, S, 6	—	—	—	—	—	E, U, W, S, 6	—	E, U, W, S, 6
O	O	X	X	—	—	—	—	—	—	E, U, W, S, 6	—	E, U, W, S, 6	—
O	X	O	O	—	—	—	—	D, H, V, R, 5	—	D, H, V, R, 5	—	D, H, V, R, 5	—
O	X	O	X	D, H, V, R, 5	D, H, V, R, 5	D, H, V, R, 5	—	—	—	—	D, H, V, R, 5	—	D, H, V, R, 5
O	X	X	O	—	—	—	—	—	—	—	—	—	—
X	O	X	O	J or Q	J or Q	E, U, W, S, 6	—	—	—	—	J or Q	—	J or Q
X	X	O	O	—	—	—	—	—	—	G or I	—	G or I	—
X	X	O	X	G or I	G or I	—	—	—	—	—	G or I	—	G or I
X	O	X	X	—	—	—	—	E, U, W, S, 6	—	J or Q	—	J or Q	—
X	X	X	O	—	—	—	E, U, W, S, 6	—	E, U, W, S, 6	—	—	—	—

Table 2. Contact Block Reduction Rules

Contact Block Substitution	
Standard	
Combination	**Substitute Code**
D + E	A
D + D	M ❶
E + E	N
J + D	B
J + E	C
Note: Contacts must be on same side of operator to apply reduction rules.	

❶ **XA2** and **XA2R** contact blocks cannot be stacked upon, but they can stack on other contact blocks.

Artisan Technology Group - Quality Instrumentation ... Guaranteed | (888) 88-SOURCE | www.artisantg.com

Cylinder Lock Push Button Units (800T only)

Cylinder Lock Push Button
Cat. No. 800T-E15A

Mushroom Style Cylinder Lock
Cat. No. 800T-E15M6A

Type of Cylinder Lock	Locking Position	Type 4/13	
		Standard Cylinder Lock ❶	Red Mushroom Cylinder Lock ❶ ❷
		Cat. No.	Cat. No.
Spring Bolt — Lock can be set with key when button is in the OUT position. Button will lock when depressed. Key removable in any position. 1 N.O. - 1 N.C.	IN	800T-E15A	800T-E15M6A
Dead Bolt A — Button can only be operated with the key in the lock. Key removable in locked position only. 1 N.O. - 1 N.C.	IN OUT	800T-E24A 800T-E14A	800T-E24M6A 800T-E14M6A
Dead Bolt B — Button can be operated with or without the key inserted in the lock. Key removable in any position. 1 N.O. - 1 N.C.	IN OUT	800T-E12A 800T-E11A	800T-E12M6A 800T-E11M6A

❶ Each device supplied with 2 keys. Replacement key part no. for statdard E158 key is X-144218.
❷ For jumbo size mushroom cap, change "M" to "J." For example, 800T-E15M6A becomes 800T-E15J6A.

Momentary Padlocking Mushroom Head Units (800T only) ❸

Padlocking Mushroom Button
Cat. No. 800T-D6QA

Padlocking Jumbo Mushroom Button
Cat. No. 800T-D6LQA

Contact Type		Button Color	Type 4/13	
			Standard Size Metal Mushroom Head	Jumbo Size Metal Mushroom Head
			Cat. No. ❹	Cat. No. ❹
No Contact		Red	800T-D6Q	800T-D6LQ
	1 N.O.	Red	800T-D6QD1	800T-D6LQD1
	1 N.C.	Red	800T-D6QD2	800T-D6LQD2
	1 N.C. - 1 N.C.	Red	800T-D6QA	800T-D6LQA

❸ Allows locking in the depressed position. Will hold N.C. contacts open, but might not hold N.O. contacts closed.
❹ To order without the padlocking attachment, change "Q" to "F." For example, 800T-D6QA becomes 800T-D6FA.

Accessories — Page 46
Legend Plates — Page 59
Approximate Dimensions — Page 65

Artisan Technology Group - Quality Instrumentation ... Guaranteed | (888) 88-SOURCE | www.artisantg.com

Momentary Contact Flip Lever Operators — 800H Type 4/4X only

Flip Lever Operator
Cat. No. 800H-WK4B

Flip Lever Operator
Cat. No. 800H-WK61B

Contact Type	Button Color	Hot Stamped Legend Marking	Flip Lever Cat. No.
No Contacts	Gray	START	800H-WK42
		No Legend ❶	800H-WK4
	Red ❷	STOP	800H-WK61
		No Legend ❶	800H-WK6
1 N.O. - 1 N.C.	Gray	START	800H-WK42A
		No Legend ❶	800H-WK4A
	Red ❷	STOP	800H-WK61A
		No Legend ❶	800H-WK6A
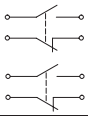 2 N.O. - 2 N.C.	Gray	START	800H-WK42B
		No Legend ❶	800H-WK4B
	Red ❷	STOP	800H-WK61B
		No Legend ❶	800H-WK6B

❶ Legend plate can be ordered separately. Refer to accessories section.
❷ Locking provision is supplied as standard on red units.

Momentary Wobble Stick Push Button Units — 800T Type 13 only

Wobble Stick Unit
Cat. No. 800T-M1B

Contact Type	Wobble Stick ❸ Cat. No.
No Contacts	800T-M1
1 N.O.	800T-M1D1
1 N.O. - 1 N.C.	800T-M1A
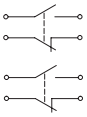 2 N.O. - 2 N.C.	800T-M1B

❸ Can be operated from any angle.

Accessories — Page 46
Legend Plates — Page 59
Approximate Dimensions — Page 65

Artisan Technology Group - Quality Instrumentation ... Guaranteed | (888) 88-SOURCE | www.artisantg.com

Break-Glass Push Button Stations (800T Only)

Complete Station

Photo	Description	Contact Symbol	Cat. No.
Break-Glass Push Button Station Cat. No. 800T-NX114	**Break-Glass Push Button Station** Red push button station in a Type 13 enclosure incorporates either one or two snap action contact blocks, which are operated when the small glass window is broken. Includes STOP legend.	1 N.O. - 1 N.C.	800T-NX114
		2 N.O. - 2 N.C.	800T-NX115

Miscellaneous Kits

	Description	Contact Symbol	Cat. No.
Break-Glass Kit Cat. No. 800T-S6M	**Unit Only Kit** The break-glass unit less the enclosure is available as a kit to install into the customer's enclosure. The kit includes the contact unit, the hammer and chain and five extra glass discs with one button tack. This kit does not include legend plate. For legend plates, see page X-REF.	1 N.O. - 1 N.C.	800T-S6M
		2 N.O. - 2 N.C.	800T-S6N
Replacement Snap Action Contact Block Kit Cat. No. 800T-NXM	**Replacement Snap Action Contact Block Kit** This kit is used to replace the snap action contact block.	1 N.O. - 1 N.C.	800T-NXM
		2 N.O. - 2 N.C.	800T-NXN
	Description		**Cat. No.**
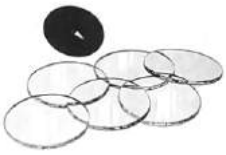 *Glass Disc Kit Cat. No. 800T-N28*	**Glass Disc Kit** Each replacement kit for break-glass push button units or stations consists of six glass discs and one button tack.		800T-N28

Approximate Dimensions

Dimensions in inches (millimeters). Dimensions are not intended to be used for manufacturing purposes.

Break-Glass Station

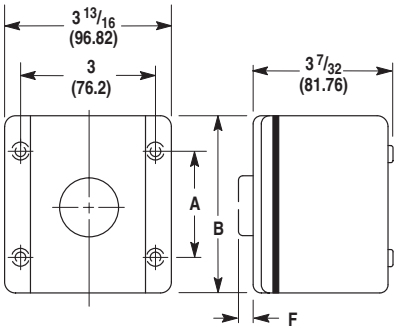

A = 2 3/4 (69.85)
B = 4 3/16 (106.38)
F = 9/16 (14.28)

Artisan Technology Group - Quality Instrumentation ... Guaranteed | (888) 88-SOURCE | www.artisantg.com

Custom Built Stations (800T only)

The following information is required when ordering custom built push button stations.

1. Cat. no. of enclosure.
2. Cat. no. of control units.
3. Legend plate cat. no. and/or marking for each unit.
4. Specify vertical/horizontal mounting.
5. Specify operator mounting sequence that you want. Including a sketch is recommended. If information not given, standard configuration will be used.

Cat. No.

The cat. no. used to identify custom built Bulletin 800T push button stations is cat. no. listed for enclosure only. The letter **W** is substituted for the letter **Z** and a station serial no. is added.

Enclosures Only

No. of Openings	Surface Mount ❺		Flush Mount	Pendant Type	
	Die Cast ❶ (Type 4/13)	Sheet Metal (Type 13)	Die Cast Face Plate (Type 13)	One Hole in Bottom (Type 13)	Openings in Cover (Type 13)
	Cat. No. 800T-2TZ	*Cat. No. 800T-6TJZ*	*Cat. No. 800T-2ZT*	*Cat. No. 800T-2PZ*	*Cat. No. 800T-2PY*
	Cat. No.	**Cat. No.**	**Cat. No.**	**Cat. No.**	**Cat. No.**
1	800T-1TZ ❷	—	800T-1ZT	—	—
2	800T-2TZ ❷	—	800T-2ZT	800T-2PZ	800T-2PY
3	800T-3TZ ❷	—	800T-3ZT	800T-3PZ	800T-3PY
4	800T-4TZ ❷	—	800T-4ZT	800T-4PZ	800T-4PY
5	—	—	—	800T-5PZ	800T-5PY
6 ❸	800T-6TZ ❷	—	800T-6ZT	800T-6PZ	800T-6PY
6 ❹	800T-6THZ	800T-6TJZ	800T-6ZTH	—	—
7	—	—	—	800T-7PZ	800T-7PY
8	—	—	—	800T-8PZ	800T-8PY
9	800T-9TZ	800T-9TJZ	800T-9ZT	800T-9PZ	800T-9PY
10	—	—	—	800T-10PZ	800T-10PY
12	800T-12TZ	800T-12TJZ	800T-12ZT	—	—
16	800T-16TZ	800T-16TJZ	800T-16ZT	—	—
20	—	800T-20TJZ	—	—	—
25	—	800T-25TJZ	—	—	—

Note: Enclosure and conduit dimensions are detailed on page 75.

❶ Enclosure depth will accommodate one shallow and one mini-contact block stacked.
❷ Add suffix **Y** to the cat. no. for yellow painted enclosure. Example: **Cat. No. 800T-1TZY**.
❸ One vertical row.
❹ Two vertical rows of three holes.
❺ Botton conduit entry. Grounding provision provided.

Artisan Technology Group - Quality Instrumentation ... Guaranteed | (888) 88-SOURCE | www.artisantg.com

Custom Built Stations

The following information is required when ordering custom built push button stations.

1. Cat. no. of enclosure.
2. Cat. no. of control units.
3. Legend plate cat. no. and/or marking for each unit.
4. Specify vertical/horizontal mounting.
5. Specify operator mounting sequence that you want. Including a sketch is recommended. If information not given, standard configuration will be used.

Cat. No.

The cat. no. used to identify custom built Bulletin 800H push button stations is cat. no. listed for enclosure only. The letter **W** is substituted for the letter **Z** and a station serial no. is added.

Enclosures Only

Stainless Steel
Cat. No. 800H-2HZ4

Rosite Glass Polyester
Cat. No. 800H-2HZ4R

Fiberglass
Cat. No. 800H-2HZ4Y

No. of Knockout Holes	Conduit Hubs		Stainless Steel (#304) Type 4/4X/13	Rosite Glass Polyester Type 4/4X/13	No. of Knockout Holes	Conduit Openings		Fiberglass ❶ Type 4/4X/13
	No.	Dia.	Cat. No.	Cat. No.		No.	Dia. ❷	Cat. No.
0 ❸	1	3/4"	800H-0HZ4	—	1	1	3/4"	800H-1HZ4Y
1	1	3/4"	800H-1HZ4	800H-1HZ4R	2	1	1"	800H-2HZ4Y
1	2	3/4"	—	800H-1HZ4RM1	3	1	1"	800H-3HZ4Y
1	1	1"	—	800H-1HZ4RM2	—	—	—	—
2	1	3/4"	800H-2HZ4	800H-2HZ4R	—	—	—	—
2	2	3/4"	800H-2HZ4M1	800H-2HZ4RM1	—	—	—	—
2	1	1"	800H-2HZ4M2	800H-2HZ4RM2	—	—	—	—
3	1	3/4"	800H-3HZ4	800H-3HZ4R	—	—	—	—
3	2	3/4"	800H-3HZ4M1	800H-3HZ4RM1	—	—	—	—
4	1	3/4"	800H-4HZ4	800H-4HZ4R	—	—	—	—
4	2	3/4"	800H-4HZ4M1	800H-4HZ4RM1	—	—	—	—
5	1	1"	800H-5HZ4	—	—	—	—	—
6	1	1"	800H-6HZ4	800H-6HZ4R	—	—	—	—
7	1	1"	800H-7HZ4	—	—	—	—	—
8	1	1"	800H-8HZ4	—	—	—	—	—

Note: Other combinations of conduit hub sizes are available upon request. Enclosure and conduit dimensions are detailed on page 77.

❶ Extra deep. Accommodates 2 levels of stackable sealed switch contact blocks.
❷ Conduit hubs must be ordered separately. For 3/4" hub order **1490-N9**. For 1" hub order **1490-N10**.
❸ Identical to **800H-1HZ4** but without mounting holes.

Artisan Technology Group - Quality Instrumentation ... Guaranteed | (888) 88-SOURCE | www.artisantg.com

Contact Blocks

Packaged in kit form for field installation. All necessary mounting hardware is provided with each contact block kit. **Contact ratings are listed on page 18.** **Note:** It is not recommended to mount more than four contact blocks on any one non-illuminated operator, (maximum two blocks deep). Contact blocks cannot be stacked onto power modules, so illuminated operators are limited to two contact blocks. Sealed switch contact blocks are not stackable, and are limited to two blocks per operator. Time delay contacts are only available as one circuit per operator.

Shallow Block

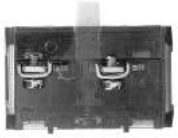
PenTUFF (Low Voltage) Contact Block

Logic Reed Block

Sealed Switch Block

Stackable Sealed Switch Block

No. of Contacts	Shallow Block ❶❷	Pen*TUFF* (Low Voltage) Block ❶❷	Logic Reed Block ❸	Sealed Switch Block ❸	Stackable Sealed Switch Block ❸
	Cat. No.	Cat. No.	Cat. No.	Cat. No.	Cat. No.
1 N.O.	800T-XD1	800T-XD1V	800T-XD1R	800T-XD1P	800T-XD1Y
1 N.C.	800T-XD2	800T-XD2V	800T-XD2R	800T-XD2P	800T-XD2Y
1 N.O. (Early Make)	800T-XD3	800T-XD3V	—	—	—
1 N.C. (Late Break)	800T-XD4	800T-XD4V	—	—	—
1 N.O. - 1 N.C.	800T-XA	800T-XAV	800T-XAR	800T-XAP	800T-XAY
2 N.O.	800T-XA2 ❹	—	800T-XA2R ❹	—	800T-XA2Y
2 N.C.	800T-XA4	—	800T-XA4R	—	800T-XA4Y
1 N.C. (Late Break) 1 N.O.	800T-XA1	—	—	—	—
1 N.C. (Late Break) 1 N.C.	800T-XA7	—	—	—	—

Self Monitoring Contact Block

Mini Block

Time Delay Block

MaxDuty Block

No. of Contacts	S.M.C.B. ❶❻
	Cat. No.
1 N.C. (Late Break) (wired in series with 1 N.O. monitoring contact)	800TC-XD4S

No. of Contacts	Mini Block ❶	Time Delay Block ❺	MaxDuty Block
	Cat. No.	Cat. No.	Cat. No.
1 N.O.	800T-XD5	800T-XT	800T-XD1M
1 N.C.	800T-XD6	800T-XS	800T-XD2M
1 N.C.L.B.	—	—	800T-XD4M

❶ Contact blocks with normally closed contacts meet direct drive positive opening standard requirements when properly fused to IEC 269-1 and 269-2. Shallow/mini contacts: 10 A gl or N type cartridge fuse. Pen*TUFF* contacts: 6 A gl or N type cartridge fuse.
❷ Specify Bulletin 800TC for finger-safe contact blocks. Example: **Cat. No. 800T-XA becomes Cat. No. 800TC-XA**.
❸ 800T operator using sealed switch and logic reed contact blocks and installed in a suitable enclosure are UL Listed as suitable for use in Class I, Division 2/Zone 2 hazardous locations.
❹ Additional contacts cannot be stacked on XA2 and XA2R contact blocks.
❺ For contact ratings, see page 18.
❻ For use with 2-position push-pull or push-pull/twist operators only. Must be mounted on the first level of the operator. The N.O. monitoring contact automatically closes when the S.M.C.B. is properly installed onto the operator. If the S.M.C.B. is separated from the operator, the N.O. monitoring contact automatically opens.

Shallow Contact Block Hardware

Description	Cat. No.
❼ Contact Block Mounting Screw	800T-N335
❽ Screw Retainer	800T-N336
❾ Actuator Extender	800T-N337

Artisan Technology Group - Quality Instrumentation ... Guaranteed | (888) 88-SOURCE | www.artisantg.com

Power Modules

Packaged in kit form for field installation. Lamps are listed on page 58.

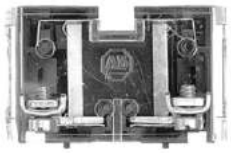

Full Voltage Power Module
Cat. No. 800T-N330

Transformer Power Module
Cat. No. 800T-N326

Dual Input Power Modules
Cat. No. 800T-N296 (Transformer)
Cat. No. 800T-N290N (Diode)

Full Voltage ❹		Transformer ❹		Dual Input Kits		
Voltage	**Cat. No.**	**Voltage**	**Cat. No.**	**Type**	**Voltage**	**Cat. No.**
6 AC/DC	800T-N330	48 AC, 50/60 Hz	800T-N325	Transformer ❶	120 AC	800T-N296
12 AC/DC	800T-N330	120 AC, 50/60 Hz	800T-N326	Diode Type ❷	24/120V AC/DC	800T-N290N
24 AC/DC	800T-N330	240 AC, 50/60 Hz	800T-N327	—	—	—
120 AC/DC	800T-N330	277V AC, 50/60 Hz	800T-N327Y	—	—	—
240 AC/DC ❸	800T-N331	480 AC, 50/60 Hz	800T-N328	—	—	—
—	—	600 AC, 50/60 Hz	800T-N329	—	—	—

❶ Transformer type dual input provides circuit isolation via a miniature type relay. This module is used in conjunction with a 120V transformer.
❷ Diode type dual input provides circuit isolation via opposing diodes. Not recommended for use with solid-state outputs and neon indicators.
❸ 240V full voltage module contains 50% dropping resistors for use with a 120V incandescent lamp.
❹ Specify Bulletin 800TC for finger-safe power modules. Example: **Cat. No. 800T-N330** becomes **800TC-N330**.

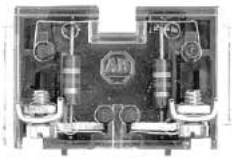

Resistor Power Module
Cat. No. 800T-N332

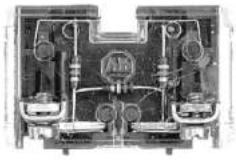

Neon Power Module
Cat. No. 800T-N333

Resistor (10% Drop) ❻		Neon ❺❻	
Voltage	**Cat. No.**	**Voltage**	**Cat. No.**
120 AC/DC	800T-N332	120 AC/DC 240 AC/DC	800T-N333 800T-N334

❺ Neon modules contain resistors.
❻ Specify Bulletin 800TC for finger-safe power modules. Example: **Cat. No. 800T-N332** becomes **800TC-N332**.

Replacement Keys for Cylinder Lock (2, 3, and 4 position) Selector Switches (800T only)

AB Cylinder Lock Key Option Code	Series Key Number	Cat. No.	AB Cylinder Lock Key Option Code	Series Key Number	Cat. No.
Blank (standard key)	D018 (standard key)	X-181170	15	T112 ❽	40269-087-01
03	D020 ❼	X-307922	16	T115 ❽	40269-087-02
04	D025 ❼	X-307924	17	T324 ❽	40269-087-03
05	D335 ❼	X-307925	18	T382 ❽	40269-087-04
06	D429 ❼	X-307926	19	T404 ❽	40269-087-05
07	D461 ❼	X-307927	20	T171 ❽	40269-087-06
08	D111 ❼	X-307928	21	T484 ❽	40269-087-07
09	D587 ❼	X-307929	22	T547 ❽	40269-087-08
10	D682 ❼	X-307930	23	T569 ❽	40269-087-09
11	D713 ❼	X-307931	24	T692 ❽	40269-087-10
12	D900 ❼	X-307932	25	T752 ❽	40269-087-11
13	D992 ❼	X-307933	26	T178 ❽	40269-087-12
14	D118 ❼	X-307934	—	—	

❼ Uses master key DM81, AB Part Number X-433358.
❽ Uses master key 15T, AB Part Number X-433359.

Artisan Technology Group - Quality Instrumentation ... Guaranteed | (888) 88-SOURCE | www.artisantg.com

Replacement Keys for Push Button Switches with Cylinder Locks (800T only)

Lock Key Option Code			Series Key Number	Cat. No.
Spring Bolt	Dead Bolt A	Dead Bolt B		
Blank (standard key)	Blank (standard key)	Blank (standard key)	E158 (standard key)	X-144218
44	32	20	E109	X-386233
45	33	21	E131	X-386234
46	34	22	E100	X-386235
47	35	23	E115	X-386236
48	36	24	E120	X-386237
49	37	25	E104	X-386238
50	38	26	E108	X-386239
51	39	27	E132	X-386240
52	40	28	E144	X-386241
53	41	29	E157	X-386242
54	42	30	E101	X-386243
55	43	31	E102	40274-250-01
66	61	56	E106	40274-250-07
67	62	57	E111	40274-250-02
68	63	58	E117	40274-250-14
69	64	59	E125	40274-250-21
70	65	60	E130	40274-250-26

Artisan Technology Group - Quality Instrumentation ... Guaranteed | (888) 88-SOURCE | www.artisantg.com

Replacement Color Caps

Color caps listed below are for field replacement on installed devices or for completion of devices ordered with color caps omitted.

Push-Pull

Push-Pull

Push-Pull/Twist

Push-Pull Jumbo

Push-Pull/Twist Jumbo

Push-Pull Color Caps, Illuminated

Color	800T Push-Pull	800H Push-Pull	800T/H Push-Pull/Twist	800T/H Push-Pull Jumbo	800T/H Push-Pull/ Twist Jumbo
	Cat. No.	Cat. No.	Cat. No.	Cat. No.	Cat. No.
Amber	800T-N159A	800H-N112A	800T-N301A	800T-N209A	800T-N306A
Blue	800T-N159B	800H-N112B	800T-N301B	800T-N209B	800T-N306B
Clear	800T-N159C	800H-N112C	800T-N301C	800T-N209C	800T-N306C
Green	800T-N159G	800H-N112G	800T-N301G	800T-N209G	800T-N306G
Red	800T-N159R	800H-N112R	800T-N301R	800T-N209R	800T-N306R
White	800T-N159W	800H-N112W	800T-N301W	800T-N209W	800T-N306W

Illuminated Mushroom

Illuminated Jumbo Mushroom

Standard

Push-to-Test

Glass Caps for Pilot Lights

Color	800T/H Push Button Color Caps, Illuminated		800T/H Pilot Light Color Caps		Glass Caps for 800T Pilot Lights
	Mushroom	Jumbo Mushroom	Standard ❶	Push-to-Test and Illuminated ❶	
	Cat. No.	Cat. No.	Cat. No.	Cat. No.	Cat. No.
Amber	800T-N304A	800T-N305A	800T-N26A	800T-N42	800T-N22
Blue	800T-N304B	800T-N305B	800T-N26B	800T-N43	800T-N23
Clear	800T-N304C	800T-N305C	800T-N26C	800T-N45	800T-N25
Green	800T-N304G	800T-N305G	800T-N26G	800T-N41	800T-N21
Red	800T-N304R	800T-N305R	800T-N26R	800T-N40	800T-N20
White	800T-N304W	800T-N305W	800T-N26W	800T-N44	800T-N24

❶ Available in bulk quantities of 20. Add suffix (**-BP**) to the cat. no. and order in multiples of 20.

Plastic Mushroom

Plastic Jumbo Mushroom

Padlocking Metal Mushroom

Metal Jumbo Mushroom

800T Push Button Color Caps, Non-Illuminated

Color	800T Plastic Mushroom	800H Plastic Mushroom	800T Plastic Jumbo Mushroom	800H Plastic Jumbo Mushroom	800T Padlocking Metal Mushroom	800T Metal Jumbo Mushroom ❷
	Cat. No.	Cat. No.	Cat. No.	Cat. No.	Cat. No.	Cat. No.
Red	800T-N246R	800H-N114A	800T-N247R	800H-N115A	800T-N311R	800T-N248R
Green	800T-N246G	800H-N114B	800T-N247G	800H-N115B	800T-N311G	800T-N248G
Black	800T-N246B	800H-N114H	800T-N247B	800H-N115H	800T-N311B	800T-N248B
Orange	800T-N246O	800H-N114F	800T-N247O	800H-N115F	800T-N311O	800T-N248O
Gray	800T-N246GR	800H-N114G	800T-N247GR	800H-N115G	800T-N311GR	800T-N248GR
Blue	800T-N246BL	800H-N114C	800T-N247BL	800H-N115C	800T-N311BL	800T-N248BL
Yellow	800T-N246Y	800H-N114E	800T-N247Y	800H-N115E	800T-N311Y	800T-N248Y
Natural	—	—	—	—	—	800T-N248
White	800T-N246W	800H-N114L	—	800H-N115L	—	—

❷ For padlocking jumbo mushroom style, change listed cat. no. from **248** to **313**.

Artisan Technology Group - Quality Instrumentation ... Guaranteed | (888) 88-SOURCE | www.artisantg.com

Replacement Color Caps - cont'd

Push-Pull

Push-Pull/Twist

Push-Pull Jumbo

Push-Pull/Twist Jumbo

Color caps listed below are for field replacement on installed devices or for completion of devices ordered with color caps omitted.

Color	Push-Pull Color Caps, Non-Illuminated			
	800T/H Push-Pull	800T/H Push-Pull/Twist	800T/H Push-Pull Jumbo	800T/H Push-Pull/Twist Jumbo
	Cat. No.	Cat. No.	Cat. No.	Cat. No.
Red	800T-N160A	800T-N302A	800T-N208A	800T-N307A
Green	800T-N160B	800T-N302B	800T-N208B	800T-N307B
Blue	800T-N160C	800T-N302C	800T-N208C	800T-N307C
Yellow	800T-N160E	800T-N302E	800T-N208E	800T-N307E
Orange	800T-N160F	800T-N302F	800T-N208F	800T-N307F
Gray	800T-N160G	800T-N302G	800T-N208G	800T-N307G
Black	800T-N160H	800T-N302H	800T-N208H	800T-N307H
White	800T-N160L	800T-N302L	800T-N208L	800T-N307L

Selector Switch Knobs, Illuminated

Standard Knob

Knob Lever

Standard Knob

Knob Lever

Color	800T Knob Type		800H Knob Type	
	Standard Knob	Knob Lever	Standard Knob	Knob Lever
	Cat. No.	Cat. No.	Cat. No.	Cat. No.
Amber	800T-N297A	800T-N298A	800H-N154A	800H-N155A
Blue	800T-N297B	800T-N298B	800H-N154B	800H-N155B
Clear	800T-N297C	800T-N298C	800H-N154C	800H-N155C
Green	800T-N297G	800T-N298G	800H-N154G	800H-N155G
Red	800T-N297R	800T-N298R	800H-N154R	800H-N155R
White	800T-N297W	800T-N298W	800H-N154W	800H-N155W

Selector Switches

Photo	Description	Item	Color	Cat. No.
Selector Switch, Knobs and Actuators	**800T** **Knobs and Actuators for Selector Switches** Selector switch knobs can be changed in the field. Standard knob and knob levers can be ordered with white inserts or with a packet of colored inserts which includes one insert of each color.	Standard Knob	White	800T-N230F
			Kit	800T-N230
		Knob Lever	White	800T-N231F
			Kit	800T-N231
		Wing Lever	Gray	800T-N238
			Red	800T-N238A
		Coin Slot	Black Only	800T-N239
	800H Knob	Standard Knob	White	800H-N145F

Photo	Description	Color	Cat. No.
Color Insert Kits Cat. No. 800T-N123	**800T/H** **Color Insert Kits** Available on Selector switches with removable color inserts. Standard knob and knob levers use the same insert. If color **All** is selected, a packet of color inserts will be furnished which includes one of each color. Color Insert kits can also be ordered with operators at no additional charge.	Red	800T-N124
		Green	800T-N125
		Blue	800T-N126
		Yellow	800T-N127
		White	800T-N128
		Orange	800T-N286
		All	800T-N123

Artisan Technology Group - Quality Instrumentation ... Guaranteed | (888) 88-SOURCE | www.artisantg.com

Selector Switch Knobs, Booted Non-Illuminated (800H only)

Booted Selector Switch Knob
Cat. No. 800H-NR5

Insert Material	Material			
	Hypalon	Silicone ● ❷	Urethane ●● ❷	Ethylene ● Propylene ●● ❷
	Cat. No.	Cat. No.	Cat. No.	Cat. No.
Brass	800H-NR5 ❶	800H-NR101 ❶	800H-NR100 ❶	800H-NR103 ❶
Stainless Steel	800HS-NR5	800HS-NR101	800HS-NR100	800HS-NR103

❶ Color insert packet (Cat. No. 800T-N123) is included in each kit.
❷ Dots printed on the inside of the boot identify the boot material.

Protective Boots

Protective Boot Application Information

- **Hypalon (synthetic rubber)**
  Very resistant to attack by oxidizing chemicals such as concentrated sulfuric acid and hypochlorite solutions. Also resistant to attack by oils and performs well in a wide range of other chemicals and solvents. Good flex and high impact resistance. This is the standard boot material supplied with 800H NEMA Type 4/4X push buttons unless otherwise specified.
- **Silicone**
  Superior high temperature resistance. Particularly suited for use where organic acids or vegetable oils may be present. Also superior resistance to the effects of outdoor use, such as oxygen, ozone, and weather.
- **Urethane**
  Excellent resistance to mechanical failure. Most durable boot material. Particularly suited for use where lubricating oils and automotive fuels may be present. Also well-suited for outdoor use.
- **Ethylene-propylene**
  Particularly suited for high temperature applications. Resistant to attack by many acids and alkalies, detergents, phosphate esters, ketones, alcohols, and glycols. Outstanding service in areas with hot water and steam wash-downs.

Cat. No. 800H-N11

Cat. No. 800H-N12

Protective Boot for Illuminated Push Buttons (Type 4/13)		
Description	Type	Cat. No.
May be added to guarded units, units without guard or Push-to-Test devices. This protective boot guards against the entrance of foreign materials reaching the opening between the button and locking ring.	Boot Without Guard	800H-N11
	Boot With Guard	800H-N12

Artisan Technology Group - Quality Instrumentation ... Guaranteed | (888) 88-SOURCE | www.artisantg.com

Protective Boots, Continued

Boots supplied with control stations and components are made of a hypalon material with brass insert ring. To order boots with silicone, urethane or ethylene-propylene material, see table below. Material application information shown on page 51.

Protective Boot for Push Button
Cat. No. 800H-N5A

Protective Boots for Non-Illuminated Push Buttons ❶

Insert Material	Color	Material			
		Hypalon	Silicone ● ❷	Urethane ●● ❷	Ethylene ● Propylene ●● ❷
		Cat. No.	Cat. No.	Cat. No.	Cat. No.
Brass	Red	800H-N5A	800H-N101R	800H-N100R	800H-N103R
	Green	800H-N5B	800H-N101G	800H-N100G	800H-N103G
	Black	800H-N5H	800H-N101B	800H-N100B	800H-N103B
	Yellow	800H-N5E	800H-N101Y	800H-N100Y	—
	Blue	800H-N5C	800H-N101BL	800H-N100BL	—
Stainless Steel	Red	800HS-N5A	800HS-N101R	800HS-N100R	800HS-N103R
	Green	800HS-N5B	800HS-N101G	800HS-N100G	800HS-N103G
	Black	800HS-N5H	800HS-N101B	800HS-N100B	800HS-N103B
	Yellow	800HS-N5E	800HS-N101Y	800HS-N100Y	—
	Blue	800HS-N5C	800HS-N101BL	800HS-N100BL	—

❶ May be added to flush or extended head push button units to protect against foreign materials reaching the opening between the button and the locking ring.
❷ Dots printed on the inside of the boot identify the boot material.

Push Buttons

Photo	Description	Cat. No.
Mechanical Interlock *Cat. No. 800T-N179* *(Operators not included)*	**800T/H - Mechanical Interlock** Used on momentary contact push button units. Guards against closing the N.O. contacts of one button while the other button's N.O. contacts are closed. Buttons remain momentary.	800T-N179
Rocker Arm Operating Lever *Cat. No. 800T-N12*	**800T** **Rocker Arm Operating Lever** The rocker arm lever operates two flush head or one flush with one extended head momentary contact push button units spaced 1-27/32" center to center. Legend plates must be ordered separately and should be inverted 180° prior to engraving and installation.	800T-N12

Artisan Technology Group - Quality Instrumentation ... Guaranteed | (888) 88-SOURCE | www.artisantg.com

Miscellaneous

Photo	Description	Cat. No.
Mounting Ring Wrench Cat. No. 800T-N245	**800T/H** **Mounting Ring Wrench** This wrench will simplify tightening or loosening the octagonal mounting ring used on Bulletin 800T units. This wrench is double ended and can be used for 18 mm and 30 mm pilot light mounting rings.	800T-N245
E-Stop Jumbo Push-Pull Cap Cat. No. 800T-N209RE1	**800T/H** **Jumbo Push-Pull Cap** For use on Bulletin 800T or 800H push-pull operators. Fits on illuminated and non-illuminated devices.	800T-N209RE1
Bonding Bracket Kit Cat. No. 800T-N300	**800T** **Bonding Bracket** The bonding bracket establishes an electrical circuit between the mounting surface and metal operator bushing for grounding purposes; recommended for installations which require CSA approval. Necessary mounting hardware is included. Order 800T-N300 for back-of-panel bracket. Order 800T-N300F for front-of-panel bracket.	800T-N300 800T-N300F
Lamp Removal Tool Cat. No. 800E-ALR1	**800T/H** **Lamp Removal Tool** This tool is used for installing or replacing bayonet base type lamps, including LEDs.	800E-ALR1

Artisan Technology Group - Quality Instrumentation ... Guaranteed | (888) 88-SOURCE | www.artisantg.com

Miscellaneous, Continued

Photo	Description	Cat. No.
IEC Finger-Safe Accessories	**800T/H IEC Finger-Safe Terminal Guards** Snap-on accessories which provide IEC, IP2X and VGB finger-safe protection. Single terminal guards for single circuit contact blocks, full voltage modules, LED modules, etc. **Note:** Must be ordered in multiples of 100 pieces.	800T-N322
	Transformer covers for transformer only. **Note:** Must be ordered in multiples of 25 pieces.	800T-N324
	Multi-terminal side cover for use on single or double circuit contact blocks. **Note:** Must be ordered in multiples of 25 pieces.	800T-N323
Trim Washer *Cat. No. 800T-N292*	**Gray 800T** **Trim Washer** Used to mount the operator properly when a legend plate is not being used. **Note:** Must be ordered in multiples of 10 pieces.	800T-N292
	Plastic 800H **Trim Washer** Used to mount the operator properly when a legend plate is not being used. **Note:** Must be ordered in multiples of 10 pieces.	800H-N148
Thrust Washer *Cat. No. 800T-N293*	**Metal 800T** **Thrust Washer** Used to prevent rotation of operators in a keyed or notched hole. **Note:** Must be ordered in multiples of 10 pieces.	800T-N293
	Plastic 800T **Thrust Washer** Used to prevent rotation of operators in a keyed or notched hole. **Note:** Must be ordered in multiples of 10 pieces.	800H-N146
Etching Fluid *Cat. No. 800T-N188*	**800T** **Etching Fluid** Used to blacken freshly engraved aluminum legend plates.	800T-N188

Photo	Description	Color	Cat. No.
Closing Button *Cat. No. 800T-N1*	**800T/H** **Closing Button** Where an enclosure or flush plate with more than the required number of openings is used, this neat appearing button can be supplied to close the unused openings.	Gray	800T-N1
		Black	800T-N1B

Artisan Technology Group - Quality Instrumentation ... Guaranteed | (888) 88-SOURCE | www.artisantg.com

Locking Attachments

Photo	Description	Cat. No.
Push Button Unit with Padlocking Attachment Cat. No. 800T-N2 (Padlock not included)	**800T** **Extended Head Push Button Padlocking Attachments** Permits locking in the depressed position. Locks the Normally Closed contact in the open position. For extended head non-illuminated momentary push buttons.	800T-N2
Push Button Unit with Padlocking Attachment Cat. No. 800T-N10 (Padlock not included)	**800T** **Flush Head Push Button Padlocking Attachments** Permits locking in the depressed position. Locks the Normally Closed contact in the open position. For flush head push button.	800T-N10
Momentary Mushroom Padlocking Attachment Cat. No. 800T-N315 (Padlock not included)	**800T** **Momentary Mushroom Padlocking Attachments** For Buuletin 800T non-illuminated momentary mushroom push button. Requires use of this device is used to lock the mushroom button in a depressed position. **800T-N311 mushroom cap.**	800T-N315
Push-Pull Padlocking Attachment Cat. No. 800T-N314 (Padlock not included)	**800T/H** **Push-Pull Padlocking Attachment** For 2-position push-pull and push-pull/twist release illuminated and non-illuminated operators. Use on **standard head** only (40 mm dia.). Locks the Normally Closed contacts open only. Conversion of Normally Closed Late Break contacts to standard Normally Closed contacts are recommended when using this accessory. **Stainless steel material.**	800T-N314
Padlocking Cover Cat. No. 800T-N163 (Padlock not included)	**800T/H** **Padlocking Cover** Guards against unauthorized operation for non-illuminated, standard knob selector switches and potentiometers. **Stainless steel and clear plastic construction.**	800T-N163

Artisan Technology Group - Quality Instrumentation ... Guaranteed | (888) 88-SOURCE | www.artisantg.com

Locking Attachments, Continued

Photo	Description		Cat. No.
Padlocking Cover Cat. No. 800H-N140 (Padlock not included)	**800T/H** **Padlocking Cover** Guards against unauthorized operation. For push buttons, 2-position push-pull or twist-release units. When applying Cat. No. 800H-N140 on 2-position maintained push-pull units, cover will lock only when the button is in depressed position. Padlocking cover includes blank legend plate for customer marking. **Note:** A pre-marked legend plate is available.The words OPEN COVER TO OPERATE are on the front and PULL-TO-START-PUSH-TO-STOP are on the rear. To order legend plate only, specify Cat. No. 800H-W174L.		800H-N140
Selector Switch Unit with Padlocking Attachment Cat. No. 800T-NX446 (Padlock not included)	**800T** **2- and 3-Position Non-illuminated Selector Switch Padlocking Attachment — Standard Knob** Padlocking guard for 2- and 3-position selector switches with standard knob operators only. Locks selector switch in any maintained position.		800T-NX446
Selector Switch Padlocking Guard Cat. No. 800H-N141R (Padlock not included)	**800H** **2- and 3-Position Selector Switch with Padlocking Guards** Padlocking guards for 2- and 3-position selector switches with standard knob operators only.	**Position**	
		Left	800H-N141L
		Center	800H-N141C
		Right	800H-N141R
		All	800H-N141A
Cat. No. 800T-NX446A (Padlock not included)	**800T** **4-Position Selector Switch Attachment — Standard Knob** Kit includes selector switch and guard (padlock not included). Padlocking Guard for 4-position selector switches with standard knob operators only. Locks selector switch in any maintained position.		800T-NX446A

Photo	Description	Position	Cat. No.
Non-Illuminated Selector Switch Padlocking Attachment Cat. No. 800H-N316J (Padlock not included)	**800T/H** **Non-Illuminated Selector Switch Padlocking Attachment** 2-, 3-, and 4-position selector switch padlocking attachments. Can be used to lock operators in a desired position. For 3-position selector switches, this device can also be used to lock out a left or right position as shown in the photo to the left. Stainless steel material	For 2- and 3-Position Selector Switches	
		Left	800T-N316L
		Center	800T-N316C
		Right	800T-N316R
		Window Center through Right — Prevent Left Operation	800T-N316J
		Window Center through Left — Prevent Right Operation	800T-N316K
		For 4-Position Selector Switches	
		Left (Pos.1)	800T-N317L
		Center Left (Pos. 2)	800T-N317CL
		Center Right (Pos. 3)	800T-N317CR
		Right (Pos.4)	800T-N317R
Illuminated Selector Switch Padlocking Attachment Cat. No. 800H-N4162L (Padlock not included)	**800T/H** **Illuminated Selector Switch Padlocking Attachment** 2- and 3-position selector switch padlocking attachments for illuminated selector switches. Stainless steel material	For 2-Position Selector Switches	
		Left	800T-N4162L
		Right	800T-N4162R
		For 3-Position Selector Switches	
		Left	800T-N4163L
		Center	800T-N4163C
		Right	800T-N4163R
		Window Center through Right — Prevent Left Operation	800T-N4163J
		Window Center through Left — Prevent Right Operation	800T-N4163K

Artisan Technology Group - Quality Instrumentation ... Guaranteed | (888) 88-SOURCE | www.artisantg.com

Guards

Photo	Description	Type	Cat. No.
Push Button Unit with Cat. No. 800T-N13 1" (25.4 mm) Extra Long Guard	**800T** **Push Button Guards** Momentary push button guards to reduce the risk of accidental operation.	1" Guard for Non-Illuminated	800T-N13
		1/2" Guard for Non-Illuminated	800T-N143
		1-1/2" Guard for Illuminated	800T-N93
		1-1/2" Guard for Non-Illuminated with Locking Attachment	800T-N39
Illuminated Push Button Unit with Cat. No. 800H-N152 Guard	**800H** **Illuminated Push Button Guard** The guard provides additional protection against accidental operation of the push button unit. 1-1/2" (38.1 mm) guard for illumination units.		800H-N152
Stainless Steel Guard Cat. No. 800H-N153	**800H** **Stainless Steel Guard** Used on non-illuminated push buttons that have protective boots as shown on page 52.		800H-N153
Standard Mushroom Push Button Unit with Cat. No. 800T-N129 Guard	**800T** **Mushroom Push Button Guards** Momentary mushroom guards for standard and jumbo mushroom push buttons. Reduces the risk of accidental operation.	Standard Guard	800T-N129
		Standard Guard with Set Screw	800T-N165
		Jumbo Size Guard	800T-N151
		Jumbo Size Guard with Set Screw	800T-N154

Photo	Description	Type of Finish	Cat. No.
Protective Ring for 2-Position Push-Pull Cat. No. 800T-N310 and 800T-NX1320	**800T/H** **Protective Guard** Protective ring for 2-position push-pull operators. Illuminated or non-illuminated. Often used to avoid unintentional tripping of E-stop operators. This guard is used with standard size button (40 mm dia.).	Stainless Steel	800T-N310
		Black	800T-NX1320

Photo	Description	Cat. No.
Protective Ring for 2-Position Push-Pull Cat. No. 800T-N310J	**800T/H** **Jumbo Protective Guard** Protective ring for 2-position push-pull operators. Illuminated or non-illuminated. Often used to avoid unintentional tripping of E-stop operators. This guard is used with jumbo size button (60 mm dia.).	800T-N310J
Ramp Guard Cat. No. 800T-N339	**800T/H** **Ramp Guard** For Bulletin 800T/800H 2- and 3-position illuminated and non-illuminated push-pull units. Standard size button only (40 mm dia.).	800T-N339

Artisan Technology Group - Quality Instrumentation ... Guaranteed | (888) 88-SOURCE | www.artisantg.com

Replacement Lamps

Pilot Lights, Illuminated Push Buttons, Illuminated Push-Pull, Illuminated Push-Pull/Twist to Release

Lamp	Type	Typical Current	Lamp Voltage	ANSI No.	Cat. No.
Incandescent	Full Voltage	150 mA	6 AC/DC	755	800T-N65 ❶
		80 mA	12 AC/DC	756	800T-N141 ❶
		70 mA	24 AC/DC	757	800T-N157 ❶
		50 mA	48 AC/DC	1835	800T-N365 ❶
		22 mA	130 AC/DC	949	800T-N169 ❶
	Transformer	150 mA	6 AC	755	800T-N65 ❶
	Flashing	150 mA	6 AC	267	800T-N212 ❶
	Resistor	22 mA	130 AC/DC	949	800T-N169 ❶
	Dual-Input Diode	57 mA	24 AC/DC	24MB	800T-N180 ❶
		21 mA	120 AC	90MB	800T-N261 ❶
	Dual-Input Transformer	150 mA	6 AC	755	800T-N65 ❶
Neon	—	2 mA	120 AC/DC	B2A	609-N9
Lamp	**Type**	**Typical Current ❷**	**Lamp Voltage**	**Leakage Current**	**Cat. No.**
LED ❸	Full Voltage	14 mA/48 mA	6 AC/DC	14 mA	800T-N318x ❹
		13 mA/22 mA	12 AC/DC	3.5 mA	800T-N362x ❹
		13 mA/21 mA	24 AC/DC	3.5 mA	800T-N319x ❹
		12 mA/17 mA	32 AC/DC	3 mA	800T-N363x ❹
		9 mA/14 mA	48 AC/DC	3 mA	800T-N364x ❹
		3.3 mA/6 mA	120 AC	—	800T-N320x ❹
		4.5 mA/6.2 mA	130 AC/DC	2.2 mA	800T-N321x ❹
	Transformer	14 mA/48 mA	6 AC	14 mA	800T-N318x ❹
	Flashing	18 mA	24 AC/DC	—	800T-N319Fx ❹❺

Illuminated Selector Switches

Lamp	Type	Typical Current	Lamp Voltage	ANSI No.	Cat. No.
Incandescent	Full Voltage	150 mA	6 AC/DC	755	800T-N65 ❶
		80 mA	12 AC/DC	756	800T-N141 ❶
		70 mA	24 AC/DC	757	800T-N157 ❶
	Transformer	150 mA	6 AC	755	800T-N65 ❶
Lamp	**Type**	**Typical Current ❷**	**Lamp Voltage**	**Leakage Current**	**Cat. No.**
LED ❸	Full Voltage	14 mA/48 mA	6 AC/DC	14 mA	800T-N318x ❹
		13 mA/22 mA	12 AC/DC	3.5 mA	800T-N362x ❹
		13 mA/21 mA	24 AC/DC	3.5 mA	800T-N319x ❹
		12 mA/17 mA	32 AC/DC	3 mA	800T-N363x ❹
		9 mA/14 mA	48 AC/DC	3 mA	800T-N364x ❹
		3.3 mA/6 mA	120 AC	—	800T-N320x ❹
		4.5 mA/6.2 mA	130 AC/DC	2.2 mA	800T-N321x ❹
	Transformer	14 mA/48 mA	6 AC	14 mA	800T-N318x ❹
	Flashing	18 mA	24 AC/DC	—	800T-N319Fx ❹❺

Cluster Pilot Lights

Lamp	Type	Typical Current	Lamp Voltage	ANSI No.	Cat. No.
Incandescent	Full Voltage	195 mA	6 AC/DC	381	800T-N258 ❶
		73 mA	12 AC/DC	382	800T-N259 ❶
		37 mA	24 AC/DC	387	800T-N260 ❶
	Transformer	195 mA	6 AC	381	800T-N258 ❶
Lamp	**Type**	**Typical Current**	**Lamp Voltage**	**Polarity**	**Cat. No.**
LED	Full Voltage	45 mA	6 AC/DC	Positive	800T-N340x ❻
		36 mA	12 AC/DC	Positive	800T-N341x ❻
		14 mA	28 AC/DC	Bi-Polar	800T-N80x ❻
	Transformer	45 mA	6 AC	Positive	800T-N340x ❻

❶ Item is sold in multiples of 5. Order quantity of 5 to receive package of 5 pieces.
❷ Typical current draw varies with LED color. The first mA value is for a green or blue LED and the second mA value is for a red or amber LED.
❸ All LEDs except 120V have an internal shunt resistor for use with solid-state outputs. LEDs will not illuminate below listed leakage current.
❹ To complete the cat. no. replace the **x** with the first letter of the desired color: **A**mber, **G**reen, **R**ed, **B**lue, or **W**hite. White LEDs only available in 6V, 24V, 120V, and 130V.
❺ Flashing rate is 2 Hz.
❻ To complete the Cat. No., replace the "x" with the first letter of the desired color: **A**mber, **G**reen, or **R**ed only.

Artisan Technology Group - Quality Instrumentation ... Guaranteed | (888) 88-SOURCE | www.artisantg.com

Blank and Custom Legend Plates Aluminum, Type 4/13 (800T)

Blank/Custom Legend Plates

Standard Legend Plate

Jumbo Legend Plate

Color	Standard	Jumbo
	Cat. No.	Cat. No.
Gray (Blank)	800T-X559	800T-X559J
Red (Blank)	800T-X621	800T-X621J
Yellow (Blank)	800T-X679	800T-X679J
Gray (with Custom Text)	800T-X559E	800T-X559JE
Red (with Custom Text)	800T-X621E	800T-X621JE
Yellow (with Custom Text)	800T-X679E	800T-X679JE

Specialty Legend Plates

Automotive Legend Plate

Half Round Legend Plate

Color	Automotive	Half Round ❶
	Cat. No.	Cat. No.
Gray (Blank)	800T-X700	800T-X59
Red (Blank)	800T-X701	800T-X121
Gray (with Custom Text)	800T-X700E	800T-X59E
Red (with Custom Text)	800T-X701E	800T-X121E

Note: Include text with custom legends.

❶ All half round legend plates must be ordered in quantities of 25.

Custom Text Guidelines

Legend Size	No. of Lines	Max. No. of Characters per Line
Standard	1 Line of 2 Lines of	14 14
Jumbo	5 Lines	14
Automotive	4 Lines	20

Custom Legend Plates for 4 Way Toggle and Cluster Pilot Lights

Legend Size	Cat. No.	Color	Text Options ❷
Standard	800T-X619E ❸	Aluminum with Custom text	2 lines of up to 14 characters on top 1 line of up to 14 characters on bottom 1 vertical line of up to 7 characters on left side 1 vertical line of up to 7 characters on right side
			1 vertical line of up to 9 characters on left side 1 vertical line of up to 9 characters on right side

❷ Rule sets listed below are mutually exclusive; either one can be chosen.
❸ For blank toggle or cluster pilot legend, order 800T-X619.

Artisan Technology Group - Quality Instrumentation ... Guaranteed | (888) 88-SOURCE | www.artisantg.com

Blank and Custom Legend Plates Aluminum, Type 4/13 (800T), Continued

Speciality Legend Plates

Cat. No. 800T-X618

Cat. No. 800T-X647Y

Cat. No. 800T-X646

Type	Start/Stop Legend Plates	Emergency Stop Legend Plates		
	Gray	Yellow	Yellow (Large Size)	Yellow IEC Ring
	Cat. No.	Cat. No.	Cat. No.	Cat. No.
Push-to-Stop Pull-to-Start / Push-to-Stop Twist or Pull Release	800T-X618	800T-X618Y	800T-X647Y	—
Blank	—	—	800T-X645Y	800T-X646
Custom	—	—	800T-X645YE	—
Emergency Stop	—	—	—	800T-X646EM

Potentiometer Legend Plates

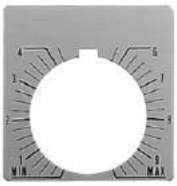

Cat. No. 800T-X609

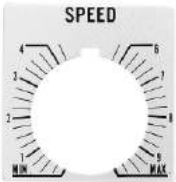

Cat. No. 800T-X608

Type	Cat. No.
Potentiometer with Graduated Markings	800T-X609 ❶
Speed with Graduated Markings	800T-X608

❶ For graduated markings with a custom text, order 800T-X609E and specify up to two lines of text, 14 characters per line.

Artisan Technology Group - Quality Instrumentation ... Guaranteed | (888) 88-SOURCE | www.artisantg.com

Standard Legends – Aluminum, Type 4/13 (800T)

Standard Legend Plate

Jumbo Legend Plate

Marking	Standard Cat. No.	Jumbo Cat. No.	Marking	Standard Cat. No.	Jumbo Cat. No.
AUTO-OFF-HAND	800T-X501	800T-X501J	ON-OFF	800T-X622	800T-X622J
AUTO-MAN-OFF	800T-X625	800T-X625J	OPEN	800T-X531	800T-X531J
CLOSE	800T-X502	800T-X502J	OPEN-CLOSE	800T-X532	800T-X532J
CYCLE START	800T-X562	800T-X562J	OPEN-OFF-CLOSE	800T-X533	800T-X533J
DOWN	800T-X503	800T-X503J	OUT	800T-X534	800T-X534J
EMERG. STOP (Yellow)	800T-X504Y	—	POWER ON	800T-X639	800T-X639J
EMERG. STOP (Red) ❶	800T-X504	800T-X504J	RAISE	800T-X535	800T-X535J
EMERGENCY STOP (Red) ❶	800T-X648	800T-X648J	RAISE-LOWER	800T-X536	800T-X536J
FAST	800T-X505	800T-X505J	RAISE-OFF-LOWER	800T-X537	800T-X537J
FEED START	800T-X566	800T-X566J	RESET	800T-X538	800T-X538J
FEED STOP	800T-X567	800T-X567J	REVERSE	800T-X539	800T-X539J
FOR.-REV.	800T-X506	800T-X506J	RUN	800T-X540	800T-X540J
FOR.-OFF-REV.	800T-X507	800T-X507J	RUN-INCH	800T-X634	800T-X634J
FORWARD	800T-X508	800T-X508J	RUN-JOG	800T-X541	800T-X541J
FOURTH SPEED	800T-X624	800T-X624J	SAFE-RUN	800T-X542	800T-X542J
FULL SPEED	800T-X509	800T-X509J	SECOND SPEED	800T-X543	800T-X543J
HAND-AUTO	800T-X510	800T-X510J	SPEED ❷	800T-X608	—
HAND-OFF-AUTO	800T-X511	800T-X511J	SLOW	800T-X544	800T-X544J
HIGH	800T-X512	800T-X512J	SLOW-FAST	800T-X545	800T-X545J
HIGH-LOW	800T-X513	800T-X513J	SLOW-OFF-FAST	800T-X546	800T-X546J
HIGH-OFF-LOW	800T-X514	800T-X514J	START	800T-X547	800T-X547J
IN	800T-X515	800T-X515J	START-JOG	800T-X548	800T-X548J
INCH	800T-X516	800T-X516J	START-STOP	800T-X549	800T-X549J
JOG	800T-X517	800T-X517J	STOP (Red)	800T-X550	800T-X550J
JOG FORWARD	800T-X518	800T-X518J	STOP-START	800T-X551	800T-X551J
JOG REVERSE	800T-X519	800T-X519J	SUMMER-OFF-WINTER	800T-X553	800T-X553J
JOG RUN	800T-X520	800T-X520J	SUMMER-WINTER	800T-X552	800T-X552J
JOG-SAFE-RUN	800T-X522	800T-X522J	TEST	800T-X554	800T-X554J
JOG-STOP-RUN	800T-X521	800T-X521J	THIRD SPEED	800T-X555	800T-X555J
LEFT-RIGHT	800T-X523	800T-X523J	UP	800T-X556	800T-X556J
LOCAL-REMOTE	800T-X638	800T-X638J	UP-DOWN	800T-X557	800T-X557J
LOW	800T-X524	800T-X524J	UP-OFF-DOWN	800T-X558	800T-X558J
LOW SPEED	800T-X525	800T-X525J	O (Red)	800T-X640	800T-X640J
LOWER	800T-X526	800T-X526J	I	800T-X641	800T-X641J
OFF	800T-X527	800T-X527J	O I	800T-X642	800T-X642J
OFF-COOLANT-ON	800T-X528	800T-X528J	I O II	800T-X643	800T-X643J
OFF-ON	800T-X529	800T-X529J	—	—	—
ON	800T-X530	800T-X530J	—	—	—

❶ These legend plates do not comply with E-Stop standards that specify a yellow background, such as IEC 60947-5-5 and NFPA 79.
❷ Potentiometer type with graduated markings.

Artisan Technology Group - Quality Instrumentation ... Guaranteed | (888) 88-SOURCE | www.artisantg.com

Legend Plates – Plastic, Type 4/4X/13 (800H)

Standard Legend Plate
Cat. No. 800H-W100

Jumbo Legend Plate
Cat. No. 800H-W100J

Automotive Legend Plate
Cat. No. 800H-W100A

Blank/Custom Legend Plates Type 4/4X			
Color	Standard	Jumbo	Automotive
	Cat. No.	Cat. No.	Cat. No.
Gray (Blank)	800H-W100	800H-W100J	800H-W100A
Red (Blank)	800H-W300	800H-W300J	800H-W300A
White (Blank)	800H-W500	800H-W500J	800H-W500A
Yellow (Blank)	800H-W700	800H-W700J	800H-W700A
Gray (with Custom Text)	800H-W100E	800H-W100JE	800H-W100AE
Red (with Custom Text)	800H-W300E	800H-W300JE	800H-W300AE
White (with Custom Text)	800H-W500E	800H-W500JE	800H-W500AE
Yellow (with Custom Text)	800H-W700E	800H-W700JE	800H-W700AE

Note: Include text with custom legends.

Custom Text Guidelines

Legend Size	Number of Lines	Maximum Number of Characters per Line
Standard	1 Line of 2 Lines of	13 13
Jumbo	5 Lines	13
Automotive	4 Lines	16

Blank Legend Plate
Cat. No. 800H-W1

Potentiometer Legend Plate
Cat. No. 800H-W080

Legend Plates — Type 4 Flip Lever ❶		Potentiometer Legends	
Color	Cat. No.	Marking	Cat. No.
White (Blank)	800H-W1	Graduated Markings Only	800H-W080
Red (Blank)	800H-W40	Speed/Graduated Markings	800H-W081
White (with Custom Text)	800H-W1E	Custom Legend with Graduated Marking	800H-W080E
Red (with Custom Text)	800H-W40E		

❶ 1 line, 11 characters, maximum.

Cat. No. 800H-W196

Cat. No. 800H-W797A

Cat. No. 800H-W690

Type	Start/Stop Legend Plates	Emergency Stop Legend Plates	
	Gray	Yellow (Large Size)	Yellow IEC Ring
	Cat. No.	Cat. No.	Cat. No.
Push-to-Stop Pull-to-Start	800H-W196	800H-W797A	—
Blank	—	800H-W700A	800H-W690
Custom	800H-W100E	800H-W700AE	—

Artisan Technology Group - Quality Instrumentation ... Guaranteed | (888) 88-SOURCE | www.artisantg.com

Standard Legend Plates – Plastic, Type 4/4X/13 (800H)

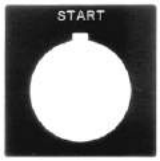

Gray Legend Plate
Type 4/4X

White Legend Plate
Type 4/4X

Marking	Gray Type 4/4X	White Type 4/4X	Marking	Gray Type 4/4X	White Type 4/4X
	Cat. No.	Cat. No.		Cat. No.	Cat. No.
AUTO-OFF-HAND	800H-W154	800H-W554	LOWER	800H-W115	800H-W515
AUTO-MAN-HAND	800H-W059	800H-W459	MAN-AUTO	800H-W031	800H-W431
CLOSE	800H-W101	800H-W501	MAN-OFF-AUTO	800H-W062	800H-W462
CYCLE START	800H-W006	800H-W406	MOTOR RUN	800H-W008	800H-W408
CYCLE STOP (Red)	800H-W376	—	MOTOR STOP (Red)	800H-W375	—
DECREASE	800H-W002	800H-W402	OFF	800H-W116	800H-W516
DOWN	800H-W102	800H-W502	OFF-COOLANT-ON	800H-W052	800H-W452
EMERG. STOP (Red) ❶	800H-W372	—	OFF-LOC-REMOTE	800H-W061	—
EMERGENCY STOP (Red) ❶	800H-W373	—	OFF-MAN-AUTO	800H-W060	800H-W460
FAST	800H-W104	800H-W504	OFF-ON	800H-W133	800H-W533
FEED START	800H-W007	—	ON	800H-W117	800H-W517
FEED STOP (Red)	800H-W377	—	OPEN	800H-W118	800H-W518
FOR.-REV	800H-W132	800H-W532	OPEN-CLOSE	800H-W134	800H-W534
FOR.-OFF-REV.	800H-W152	800H-W552	OPEN-OFF-CLOSE	800H-W153	800H-W553
FORWARD	800H-W105	800H-W505	OUT	800H-W119	800H-W519
FOURTH SPEED	800H-W010	—	POWER ON	800H-W001	800H-W401
FULL SPEED	800H-W106	800H-W506	PULL-TO-START	800H-W198	—
HAND-AUTO	800H-W131	800H-W531	PUSH-TO-STOP (Red)	800H-W378	—
HAND-OFF-AUTO	800H-W151	800H-W551	RAISE	800H-W120	800H-W520
HIGH	800H-W107	800H-W507	RAISE-LOWER	800H-W034	—
HIGH-LOW	800H-W030	—	RAISE-OFF-LOWER	800H-W156	800H-W556
HIGH-LOW-OFF	800H-W058	—	RESET	800H-W121	800H-W521
HIGH-OFF-LOW	800H-W155	800H-W555	REVERSE	800H-W122	800H-W522
IN	800H-W108	800H-W508	RIGHT	800H-W005	800H-W405
INCH	800H-W109	800H-W509	RUN	800H-W123	800H-W523
INCREASE	800H-W003	—	RUN-INCH	800H-W037	—
JOG	800H-W110	800H-W510	RUN-JOG	800H-W032	—
JOG FOR.	800H-W111	800H-W511	SAFE-RUN	800H-W033	—
JOG REV.	800H-W112	800H-W512	SECOND SPEED	800H-W124	800H-W524
JOG RUN	800H-W135	800H-W535	SLOW	800H-W125	800H-W525
JOG-SAFE-RUN	800H-W051	—	SLOW-FAST	800H-W136	800H-W536
JOG-STOP-RUN	800H-W057	—	SLOW-OFF-FAST	800H-W157	800H-W557
LEFT	800H-W004	800H-W404	SPEED ❷	800H-W081	800H-W481
LEFT-RIGHT	800H-W036	—	SPEED ❷	800H-W182	—
LOC-OFF-REMOTE	800H-W055	800H-W455	START	800H-W126	800H-W526
LOW	800H-W113	800H-W513	START-JOG	800H-W138	800H-W538
LOW-HIGH	800H-W035	—	START-JOG-STOP	800H-W158	800H-W558
LOW-OFF-HIGH	800H-W056	—	START-RUN-STOP	800H-W054	—
LOW SPEED	800H-W114	800H-W514	START-STOP	800H-W137	800H-W537

❶ These legend plates do not comply with E-Stop standards that specify a yellow background, such as IEC 60947-5-5 and NFPA 79.
❷ Potentiometer type with graduated markings.

Artisan Technology Group - Quality Instrumentation ... Guaranteed | (888) 88-SOURCE | www.artisantg.com

Standard Legend Plates – Plastic, Type 4/4X/13 (800H)

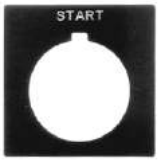

Gray Legend Plate
Type 4/4X

White Legend Plate
Type 4/4X

Marking	Gray Type 4/4X	White Type 4/4X	Marking	Gray Type 4/4X	White Type 4/4X
	Cat. No.	Cat. No.		Cat. No.	Cat. No.
UP	800H-W009	800H-W409	STOP (Red)	800H-W371	—
UP-DOWN	800H-W039	—	STOP-RUN-START	800H-W053	—
UP-OFF-DOWN	800H-W160	800H-W560	STOP-START	800H-W038	800H-W438
O	800H-W184	—	SUMMER-OFF-WINTER	800H-W159	800H-W559
O-I	800H-W185	800H-W582	SUMMER-WINTER	800H-W139	800H-W539
I	800H-W181	800H-W581	TEST	800H-W128	800H-W528
I-O-II	800H-W183	800H-W583	THIRD SPEED	800H-W129	800H-W529

Flip Lever Legend Plates

Flip Lever Legend Plate
Type 4

Marking	Flip Lever — Type 4	Marking	Flip Lever — Type 4
	Cat. No.		Cat. No.
CLOSE	800H-W3	OPEN	800H-W18
DOWN	800H-W5	OUT	800H-W19
EMERG. STOP (Red)	800H-W42	RAISE	800H-W20
FAST	800H-W6	RESET	800H-W21
FORWARD	800H-W7	REVERSE	800H-W22
FULL SPEED	800H-W35	RIGHT	800H-W23
HIGH	800H-W9	RUN	800H-W24
IN	800H-W10	SECOND SPEED	800H-W33
INCH	800H-W11	SLOW	800H-W26
JOG	800H-W12	START	800H-W27
LEFT	800H-W13	STOP (Red)	800H-W41
LOW	800H-W14	TEST	800H-W29
LOW SPEED	800H-W32	THIRD SPEED	800H-W34
LOWER	800H-W15	UP	800H-W30
OFF	800H-W16	**O**	800H-W36
ON	800H-W17	**I**	800H-W37

Artisan Technology Group - Quality Instrumentation ... Guaranteed | (888) 88-SOURCE | www.artisantg.com

Dimensions in inches (millimeters). Dimensions are not intended to be used for manufacturing purposes.

Mounting Instructions for Push Buttons with Shallow Blocks, Mini Blocks, Logic Reed Blocks, Sealed Switch Blocks, and Time Delay Blocks (see footnotes for exceptions)

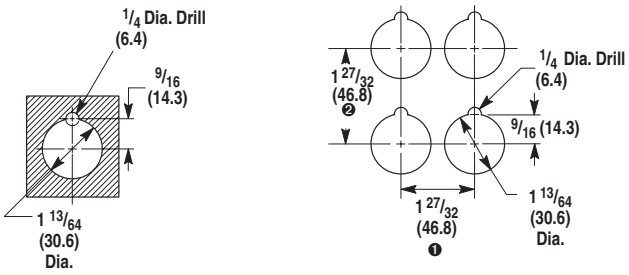

Sketch illustrates the minimum distance between centerlines when mounting Bulletin 800T/H controls either side by side, facing each other or one above the other. When control units are mounted so that the contact block terminals face each other, the 2-1/4 (57.2) dimension must be used in order to get proper electrical clearance. When control units are mounted so that the contact block terminals do not face each other, the 1-27/32 (46.8) dimension can be used.

❶ Change to 2-1/4 (57.2) for transformer type pilot light, push-to-test pilot lights, illuminated selector switches and all push-pull buttons.
Note: Large legend plate requires minimum horizontal spacing of 2-15/32 (62.7).

❷ Vertical minimum spacing dimension changes for the following legend plates: Jumbo 2-15/32 (62.7); large 2-7/16 (61.9); cluster pilot light and 2-3-4 way switches 2-1/16 (52.4).

Typical Panel Cut-Out

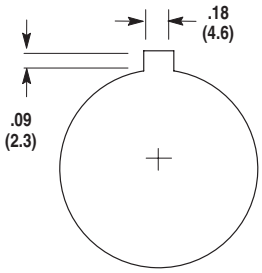

Panel Thickness — Kits are shipped with several 1/16 (1.58) gaskets. Refer to table below for number of washers required for various panel thicknesses.

	1/16 (1.6) (16 Gauge)	7/64 (2.8) (12 Gauge) 9/64 (3.6) (10 Gauge)	3/16 (4.8) Panel	Thicker Than 3/16 (4.8) Panel	Thicker Than 1/4 (6.4) Panel
800T	3 Washers	2 Washers	1 Washer	Counterbore to 3/16 (4.8)	Counterbore to 3/16 (4.8)
800H	4 Washers	3 Washers	2 Washer	1 Washer	Counterbore to 1/4 (6.4)

Typical Pilot Light Wiring Diagrams

See applicable Codes and Laws

Push-to-Test Pilot Light Device Schematic

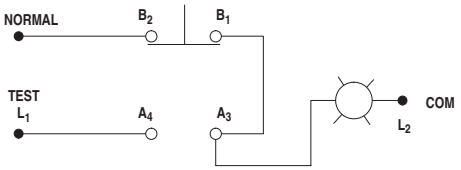

Dual Input Diode Pilot Light Device Schematic

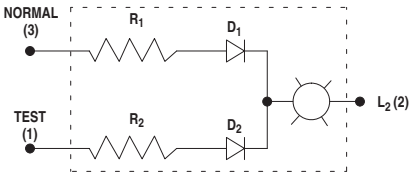

Dual Input Pilot Light Typical Application Wiring Diagram

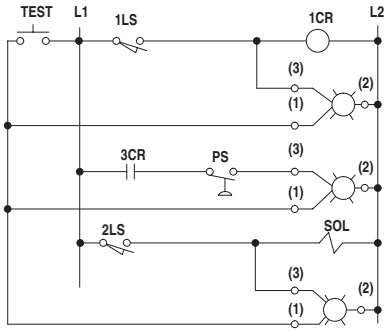

Dual Input Pilot Light Transformer Type Device Schematic

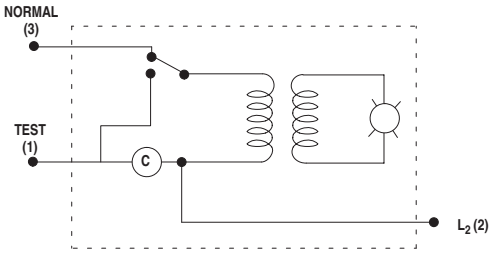

Artisan Technology Group - Quality Instrumentation ... Guaranteed | (888) 88-SOURCE | www.artisantg.com

30.5 mm Push Buttons

Approximate Dimensions and Shipping Weights, Continued

Dimensions in inches (millimeters). Dimensions are not intended to be used for manufacturing purposes.

Legend Plate Dimensions (800T only)

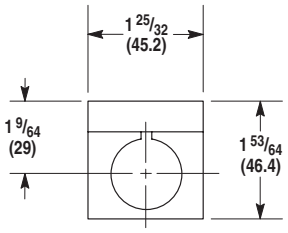

Standard Legend Plate

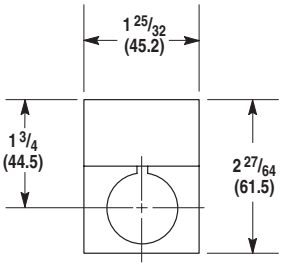

Jumbo Legend Plate

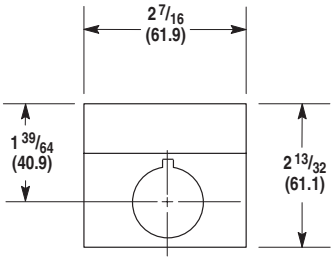

Large Legend Plate
(Automotive Industry Type)

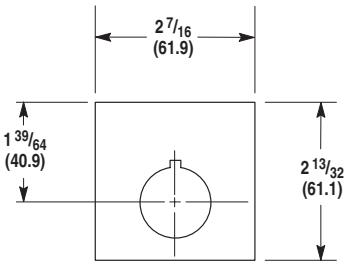

Large Size
Push-Pull/Twist Legend Plate
Cat. No. 800T-X647 ❶

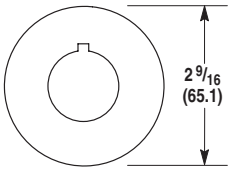

Round
Cat. No. 800T-X646 ❶

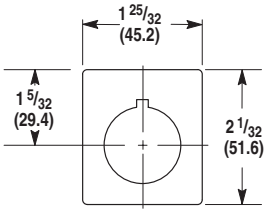

Cluster Pilot Light and
2-3-4 Way Switch
Silver Legend Plate
Cat. No. 800T-X619

❶ For panel mounting only. Not for use with Allen-Bradley enclosures.

Legend Plate Dimensions (800H only)

Type 4/4X
Standard Legend Plate

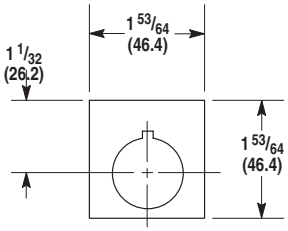

Type 4/4X
Jumbo Legend Plate

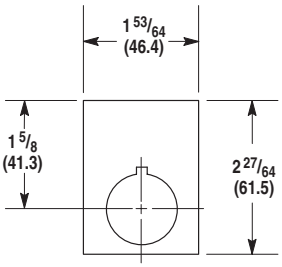

Type 4/4X
Large Legend Plate
(Automotive Industry Type)

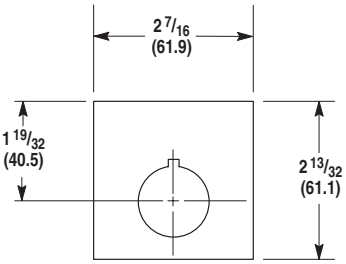

Type 4/4X
Round

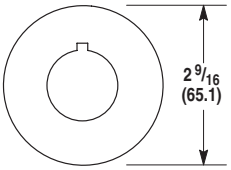

Cat. No. 800H-W690

Type 4/4X
Standard Legend Plate
(Flip Lever Operators)

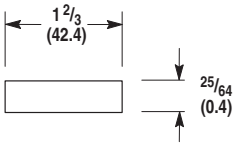

Artisan Technology Group - Quality Instrumentation ... Guaranteed | (888) 88-SOURCE | www.artisantg.com

Dimensions in inches (millimeters). Dimensions are not intended to be used for manufacturing purposes.

Blocks (800T only)

Mini Contact Block 7/8 (22.2) Deep

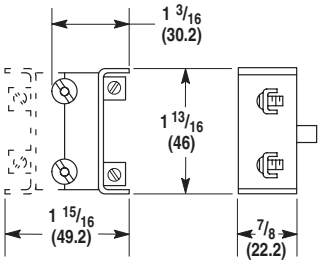

Shallow, Pen*TUFF*, and Logic Reed Contact Blocks 1-1/8 (28.6) Deep

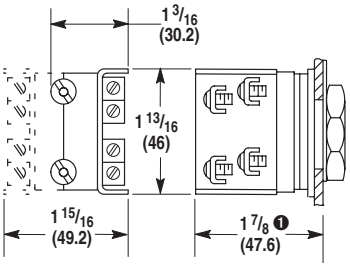

Sealed Switch Block 2 (50.8) Deep

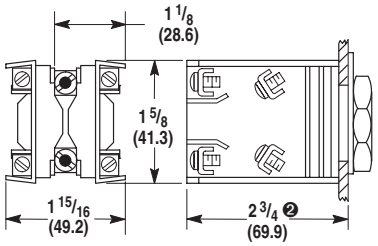

Tandem Mounting (2 shallow contact blocks stacked)

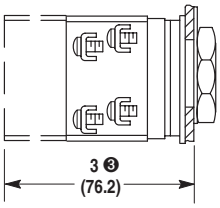

Time Delay Contact Block (For Push Buttons Only)

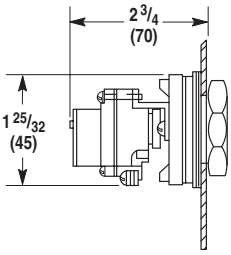

Snap Action Contact Block (For Push Button Only)

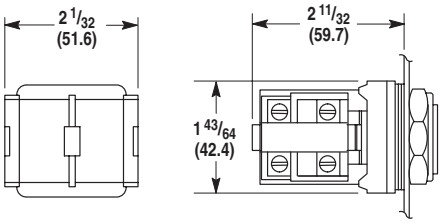

Stackable Sealed Switch Block 1.58 (40.1) Deep

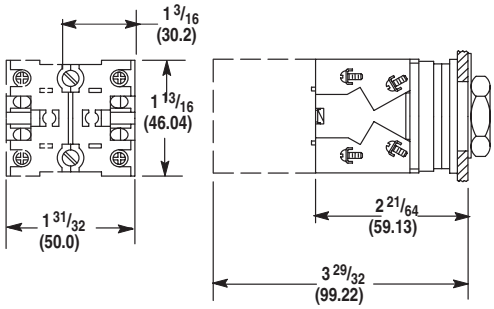

❶ Dimension shown is for push buttons. Selector switch dimension is 2-1/32 (51.6).
❷ Dimension shown is for push buttons. Selector switch dimension is 2-27/32 (72.2).
❸ Dimension shown is for push buttons. Selector switch dimension is 3-5/32 (80.2).

Blocks (800H only)

Mini Contact Block

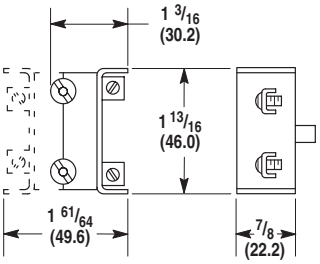

Sealed Switch Block 2 (50.8) Deep

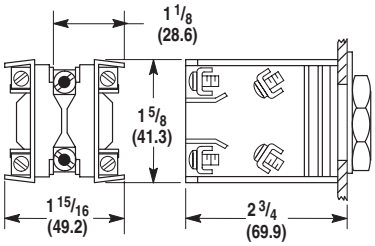

Shallow, Pen*TUFF* and Logic Reed Contact Blocks

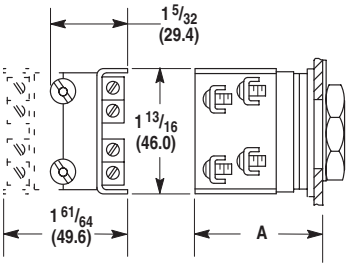

Stackable Sealed Switch Block 1.58 (40.1) Deep

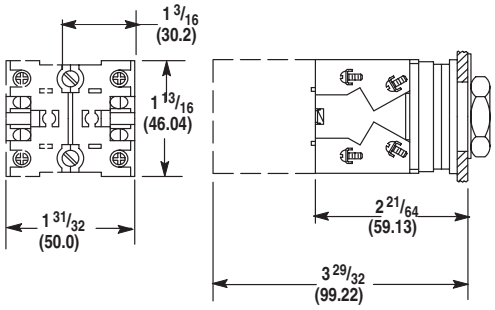

Dim.	Momentary Push Button	Maintained Push Button	Selector Switch
A	2 (50.8)	2 (50.8)	1-29/32 (48.4)

Operator Extension Behind Panel — When mounted with thrust washer, trim washer or notched legend plate and correct number of rubber washers.

Artisan Technology Group - Quality Instrumentation ... Guaranteed | (888) 88-SOURCE | www.artisantg.com

Dimensions in inches (millimeters). Dimensions are not intended to be used for manufacturing purposes.

Push Buttons and Switches (800T only)

2-3-4 Way Switch

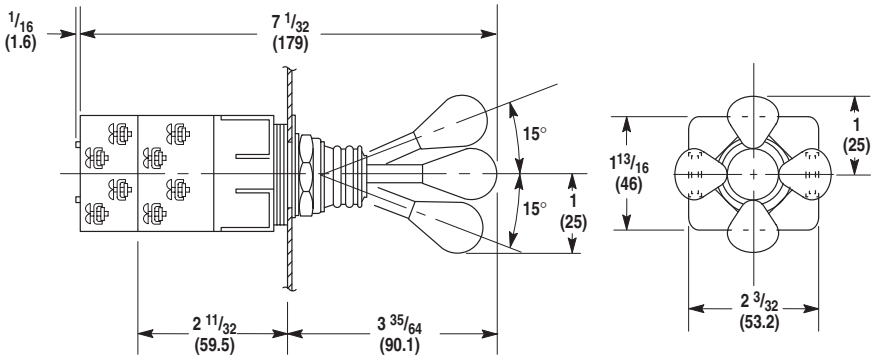

Shipping Wt. with 2 Contact Blocks 6 oz. (0.17 kg)
Shipping Wt. with 4 Contact Blocks 8-1/2 oz. (0.24 kg)

Mechanically Interlocked Maintained Contact Push Button

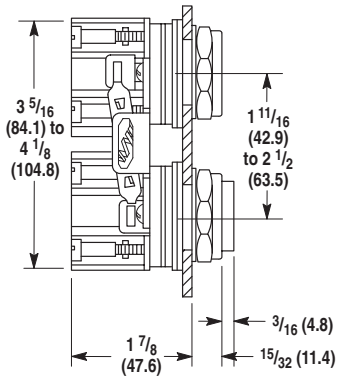

Shipping Wt. 1 lb (0.45 kg)

Push Buttons and Switches (800T only)

Flush and Extended Head Push Button

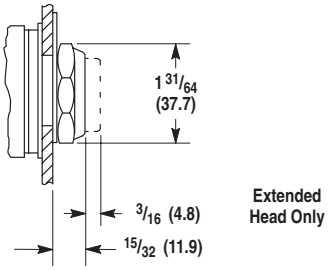

Shipping Wt. 5-1/2 oz. (0.15 kg)

Mushroom Head Push Button

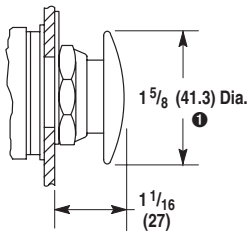

Shipping Wt. 7-1/2 oz. (0.21 kg)

Non-Illuminated Knob Lever and Standard Knob Selector Switch

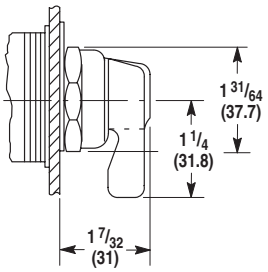

Shipping Wt. 6 oz. (0.17 kg)

Illuminated Knob Lever and Standard Knob Selector Switch

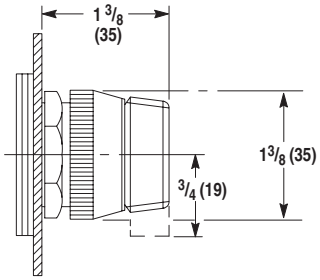

Wing Lever Selector Switch

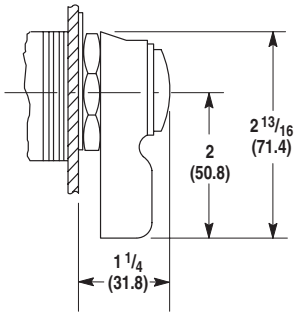

Shipping Wt. 8 oz. (0.22 kg)

Coin Slot Selector Switch

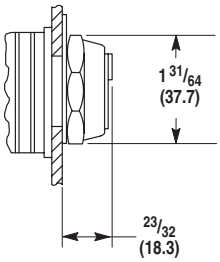

Shipping Wt. 6 oz. (0.17 kg)

❶ Except jumbo which is 2-1/4 (57.2).

Artisan Technology Group - Quality Instrumentation ... Guaranteed | (888) 88-SOURCE | www.artisantg.com

Dimensions in inches (millimeters). Dimensions are not intended to be used for manufacturing purposes.

Operator Extension in Front of Panel (800T only)

Key Operated Selector Switch

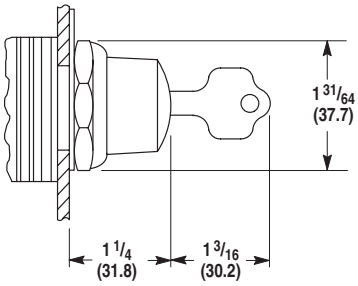

Shipping Wt. 12 oz. (0.34 kg)

Push Button with Cylinder Lock

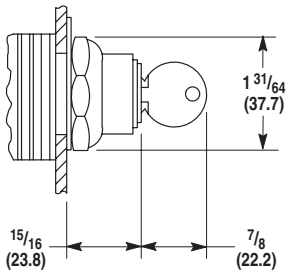

Shipping Wt. 12 oz. (0.34 kg)

Wobble Stick

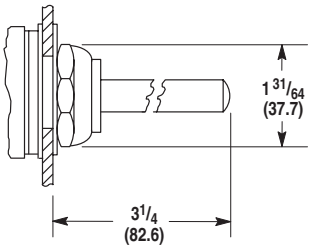

Shipping Wt. 9 oz. (0.25 kg)

Selector Push Button

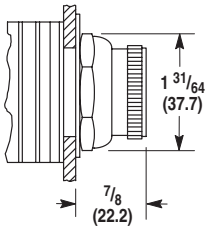

Shipping Wt. 6 oz. (0.17 kg)

Type J Potentiometer Unit

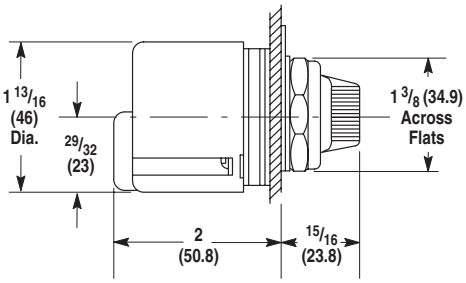

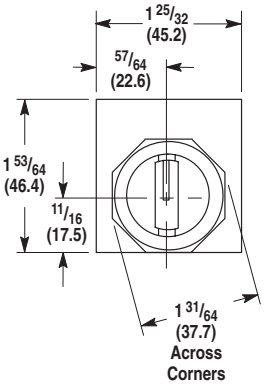

Shipping Wt. 4 oz. (0.11 kg)

Artisan Technology Group - Quality Instrumentation ... Guaranteed | (888) 88-SOURCE | www.artisantg.com

Dimensions in inches (millimeters). Dimensions are not intended to be used for manufacturing purposes.

Non-Illuminated Devices (800H only)

Bootless Flush and Extended Head Momentary Contact Push Button

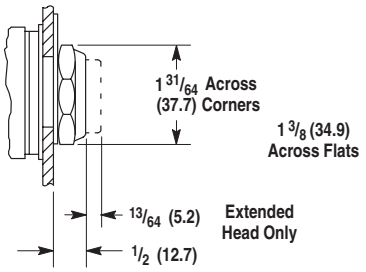

Shipping Weight. 5-1/2 oz. (0.16 kg)

Booted Flush and Extended Head Momentary Contact Push Button

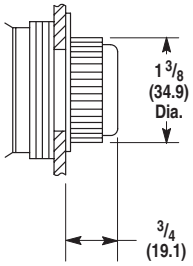

Shipping Weight. 5-1/2 oz. (0.16 kg)

Standard Knob Selector Switch Non-Illuminated

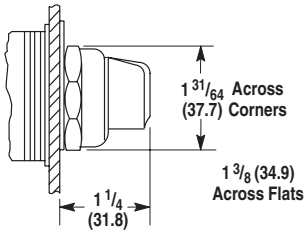

Shipping Weight. 6 oz. (0.17 kg)

Bootless Maintained Contact Push Buttons

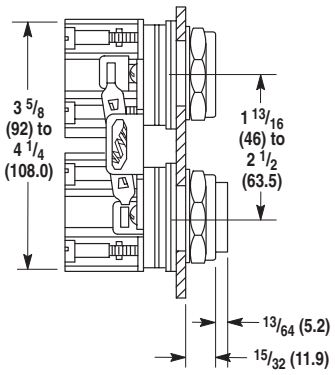

Booted Maintained Contact Push Buttons

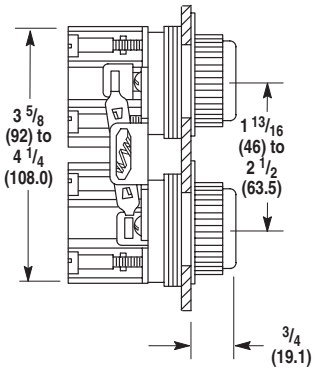

Shipping Weight. 1 lb (0.45 kg)

Type J Potentiometer Unit

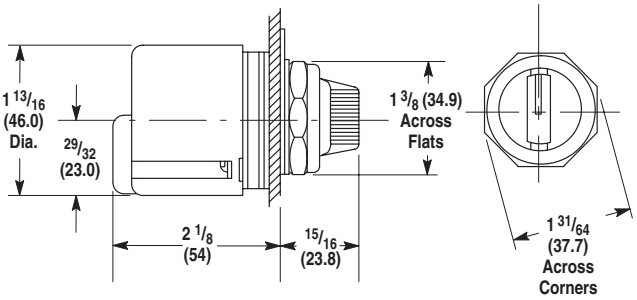

Shipping Weight. 7 oz. (0.20 kg)

Type 4 Flip Lever

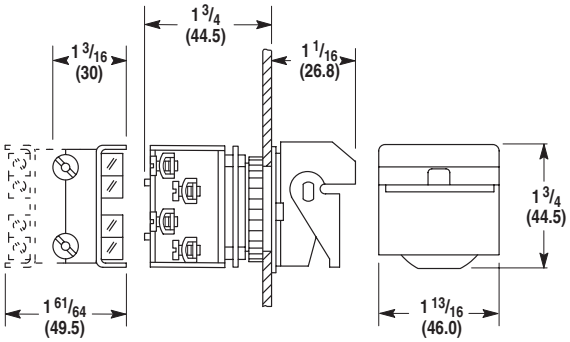

Shipping Weight. 8 oz. (0.14 kg)

Mushroom Head — Maintained and Momentary

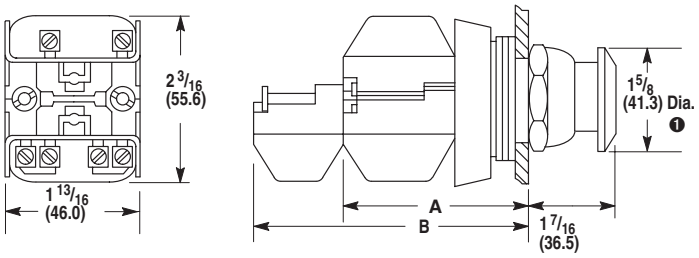

Non-Illuminated Mushroom and Push-Pull Push Buttons				
Cat. No. Suffix	Description	Dimensions		Shipping Weights
D4	One Shallow Block	A	2-1/32 (51.6)	5 oz. (0.14 kg)
A1, A5 and A7	Two Shallow blocks	A	2-1/32 (51.6)	6 oz. (0.17 kg)
B6	Two Shallow Blocks and Two Mini Blocks	B	2-7/8 (73.0)	8 oz. (0.22 kg)

❶ Jumbo versions are 2-1/4 (57.2).

Artisan Technology Group - Quality Instrumentation ... Guaranteed | (888) 88-SOURCE | www.artisantg.com

Dimensions in inches (millimeters). Dimensions are not intended to be used for manufacturing purposes.

Pilot Light and Illuminated Devices (800T only)

Full Voltage, Neon and Dual Input Pilot Light

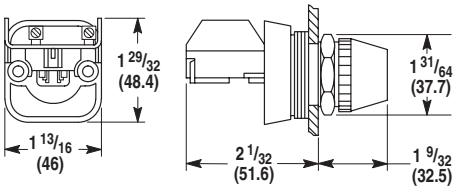

Shipping Wt. 5 oz. (0.14 kg)

Transformer Type Pilot Light

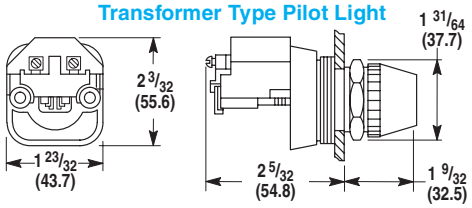

Shipping Wt. 8 oz. (0.22 kg)

Cluster Pilot Light

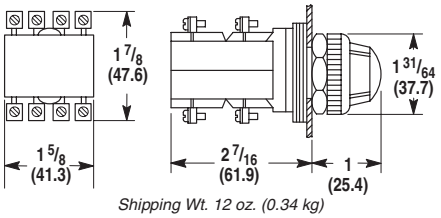

Shipping Wt. 12 oz. (0.34 kg)

Dual Input Transformer Type Pilot Light

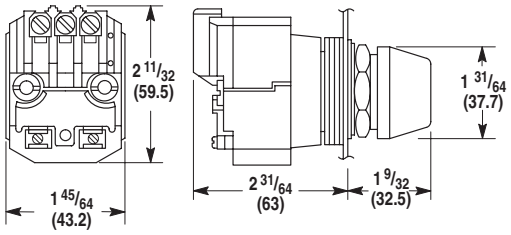

Transformer Type (Push-to-Test Pilot Light and Illuminated Push Button)

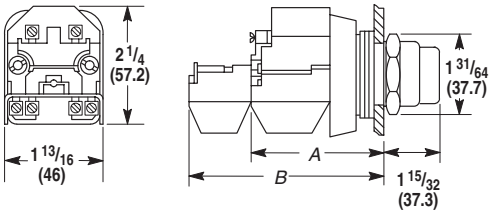

Full Voltage, Neon and Dual Input Type (Push-to-Test Pilot Light and Illuminated Push Button)

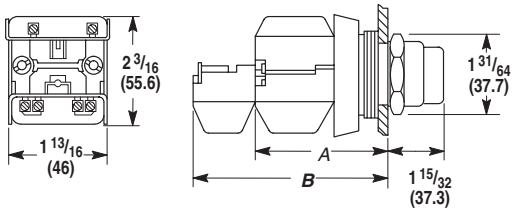

Push-Pull and Twist or Pull Release Units (Transformer Type Illuminated)

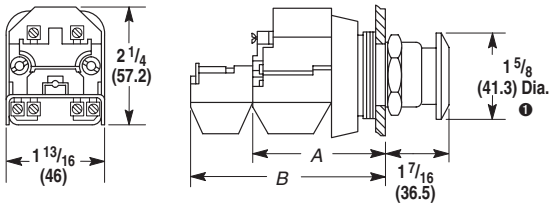

Push-Pull and Twist or Pull Release Units (Full Voltage, Neon and Dual Input Illuminated and All Non-Illuminated)

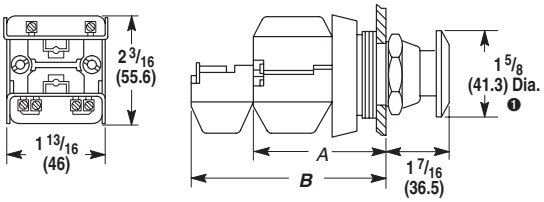

❶ Jumbo mushroom versions are 2-1/4 (57.2) diameter.

Push-to-Test Pilot Lights Illuminated Push Buttons and Illuminated Push-Pull Buttons								Non-Illuminated Push-Pull Buttons				
Cat. No. Suffix ❷	Description	Transformer Type			Full Voltage or Neon Type			Cat. No. Suffix	Description	Transformer Type		
			Dim.	Ship. Wt.		Dim.	Ship. Wt.				Dim.	Ship. Wt.
D4	Transformer or Terminal Module and One Shallow Contact Block	A	2-5/32 (54.8) ❸	9 oz. (0.25 kg)	A	2-1/32 (51.6)	7 oz. (0.25 kg)	D4	One Shallow Contact Block	A	2-1/32 (51.6)	5 oz. (0.14 kg)
A1 and A7	Transformer or Terminal Module and One Shallow Block and One Mini Contact Block	B	2-7/8 (73)	10 oz. (0.28 kg)	B	2-7/8 (73)	8 oz. (0.22 kg)	A4 A5 A7	Two Shallow Contact Blocks	A	2-1/32 (51.6)	6 oz. (0.17 kg)
AP D1P D2P	Transformer or Terminal Module and One Sealed Switch Contact Block	A	3-1/32 (77)	10 oz. (0.28 kg)	A	2-29/32 (73.8)	8 oz. (0.22 kg)	B6	Two Shallow Blocks and Two Mini Contact Blocks	B	2-7/8 (73)	8 oz. (0.22 kg)

❷ Applies to illuminated push-pull push buttons only.
❸ Dual input type pilot light dimension is 2-13/32 (61.1).

Artisan Technology Group - Quality Instrumentation ... Guaranteed | (888) 88-SOURCE | www.artisantg.com

Dimensions in inches (millimeters). Dimensions are not intended to be used for manufacturing purposes.

Pilot Light and Illuminated Devices, Continued (800T only)

Push Button Padlocking Cover (not for use with Jumbo Mushroom Head devices)

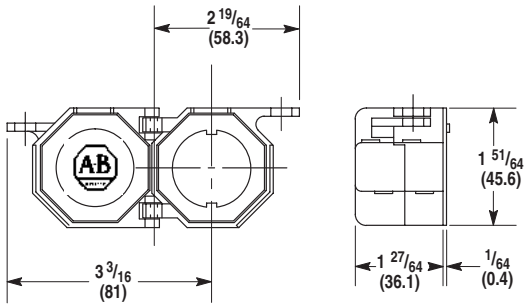

800H-N140
Shipping Wt. 1 oz. (0.03 kg)

Selector Switch and Potentiometer Unit Padlocking Cover

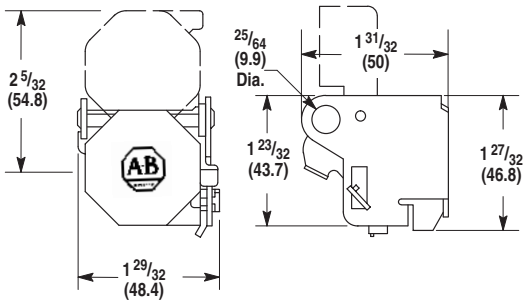

800T-N163
Shipping Wt. 2 oz. (0.06 kg)

Protective Ring and Push-Pull Illuminated or Non-Illuminated Operators

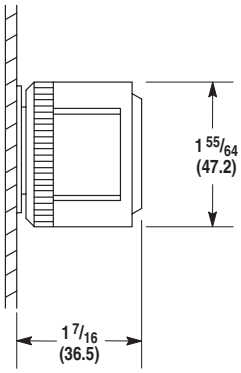

800T-N310
800T-NX1320
Shipping Wt. 4 oz. (0.12 kg)

Selector Switch Padlocking Attachment

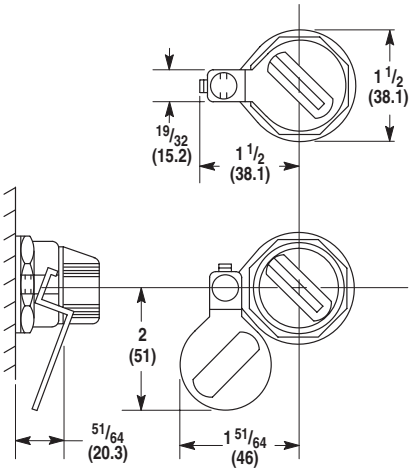

800T-N316
Shipping Wt. 1 oz (0.03 kg)

Ramp Guard for Push-Pull Illuminated or Non-Illuminated Operators

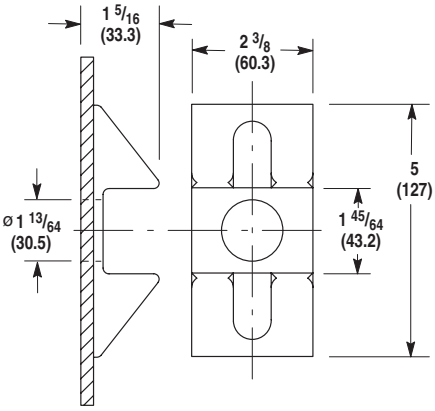

800T-N339
Shipping Wt. 11oz. (0.31 kg)

Push-Pull Padlocking Attachment and Metal Mushroom Push Button Padlocking Attachment

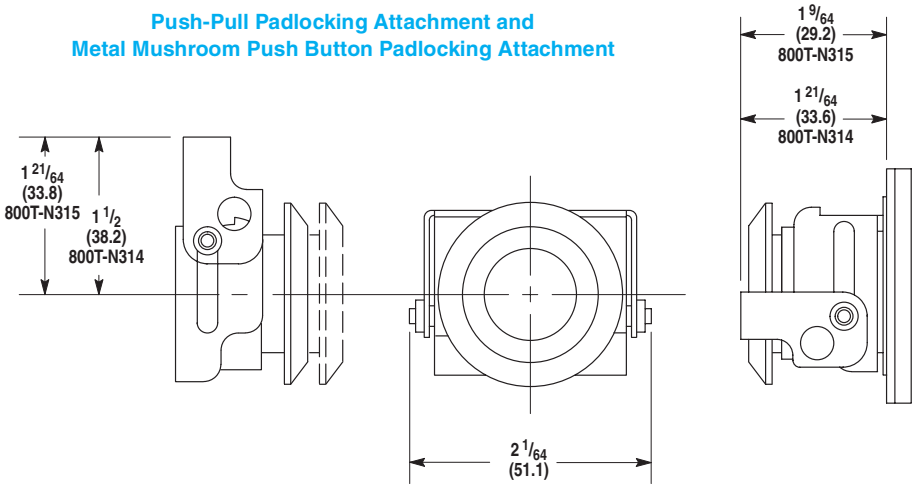

Shipping Wt. 1.4 oz (0.04 kg)

Artisan Technology Group - Quality Instrumentation ... Guaranteed | (888) 88-SOURCE | www.artisantg.com

Dimensions in inches (millimeters). Dimensions are not intended to be used for manufacturing purposes.

Pilot Lights (800H only)

Transformer Type Pilot Light (Incandescent and LED)

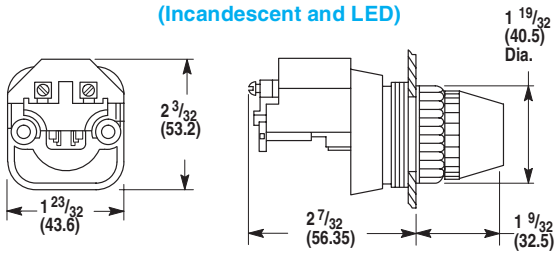

Shipping Weight. 12 oz. (0.34 kg)

Full Voltage and Dual Input Diode Type Pilot Light (Incandescent, Neon, LED)

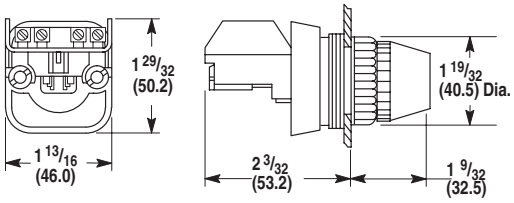

Full Voltage Pilot Light
Shipping Weight. 5 oz. (0.14 kg)

Dual Input Transformer Type Pilot Light

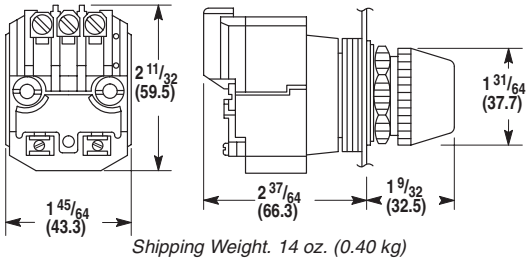

Shipping Weight. 14 oz. (0.40 kg)

Push-to-Test Pilot Light and Illuminated Devices (800H only)

(Transformer Type: Incandescent, LED) Push-to-Test Pilot Light and Illuminated Push Button

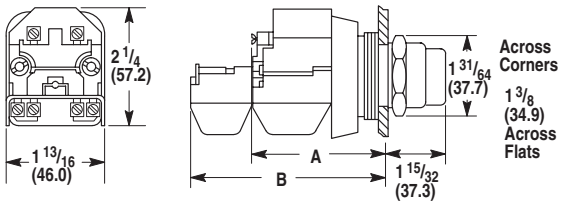

(Full Voltage: Incandescent, LED, Neon; and Dual Input Type) Push-to-Test Pilot Light and Illuminated Push Button

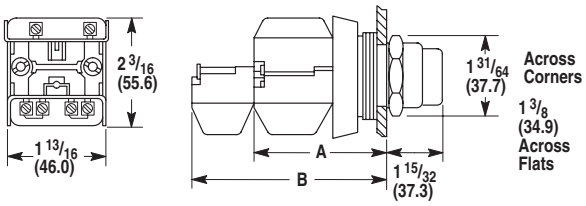

Momentary Mushroom, Push-Pull and Twist or Pull Release Units (Transformer Type: Incandescent, LED; Illuminated)

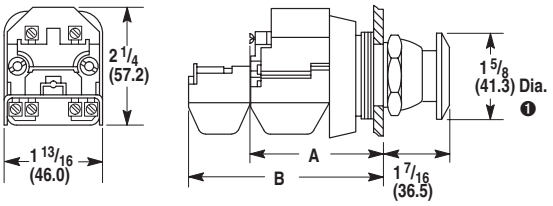

Momentary Mushroom, Push-Pull and Twist or Pull Release Units (Full Voltage: Incandescent, LED, Neon; and Dual Input Illuminated)

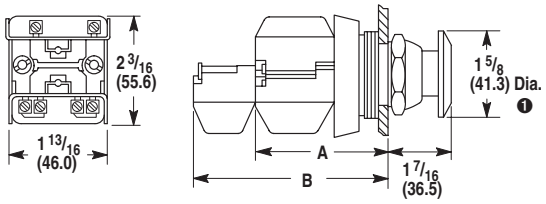

Push-to-Test Pilot Lights: Illuminated Push Buttons, Illuminated Push-Pull and Twist or Pull Release Push Buttons

Cat. No. Suffix ❷	Description	Transformer Type			Full Voltage or Neon Type		
			Dimension	Shipping Weight		Dimension	Shipping Weight
D4	Transformer or Terminal Module and One Shallow Contact Block	A	2-5/32 (54.8) ❸	9 oz. (0.25 kg)	A	2-1/32 (51.6) ❹	7 oz. (0.20kg)
A1 and A7	Transformer or Terminal Module, One Shallow Block and One Mini Contact Block	B	2-7/8 (73)	10 oz. (0.28 kg)	B	2-7/8 (73)	8 oz. (0.22 kg)
AP	Transformer or Terminal Module and One Sealed Switch Contact Block	B	2-29/32 (73.8)	10 oz. (0.28 kg)	B	2-29/32 (73.8)	8 oz. (0.22 kg)

❶ Jumbo mushroom versions are 2-1/4 (57.2).
❷ Applies to illuminated push-pull push buttons only.
❸ Dual input type pilot light dimension is 2-13/32 (61.1).
❹ Dual input type pilot light dimension is 2-9/32 (57.9).

Artisan Technology Group - Quality Instrumentation ... Guaranteed | (888) 88-SOURCE | www.artisantg.com

Dimensions in inches (millimeters). Dimensions are not intended to be used for manufacturing purposes.

Accessories

Locking Attachment for Extended, Non-Illuminated Push Buttons

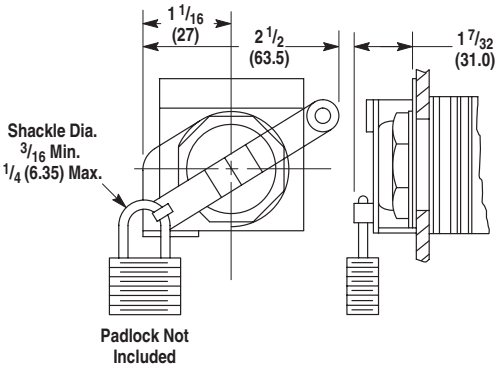

800H-N140 Locking Cover for 2-Position Non-Illuminated Maintained Twist or Pull Release and Standard Knob Selector Switch [1-5/8 (41.3) Mushroom Head only]

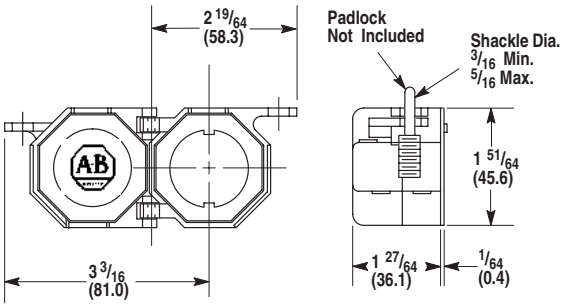

Protective Ring for 2-Position Push-Pull/Twist Illuminated or Non-Illuminated Operators

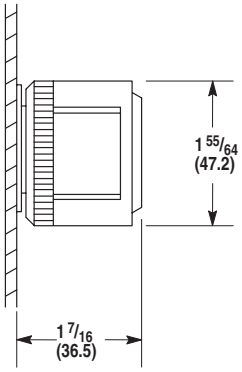

Non-Illuminated Selector Switch Padlocking Adjustment

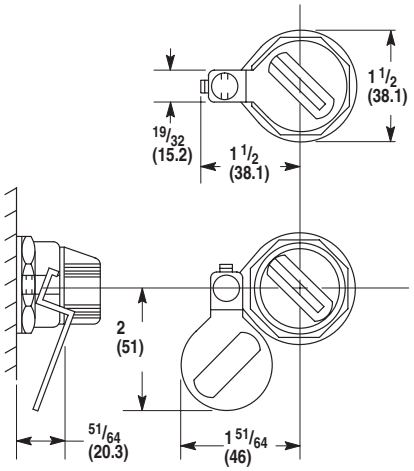

Push-Pull/Twist Padlocking Attachment

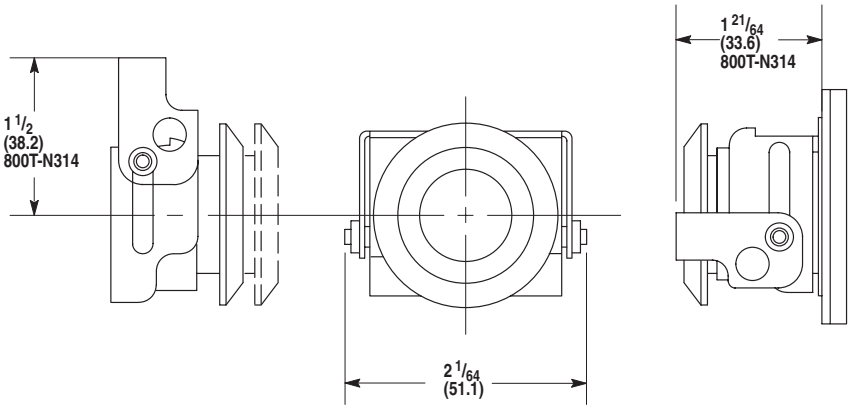

Artisan Technology Group - Quality Instrumentation ... Guaranteed | (888) 88-SOURCE | www.artisantg.com

Dimensions in inches (millimeters). Dimensions are not intended to be used for manufacturing purposes.

Die Cast Enclosures (800T only)

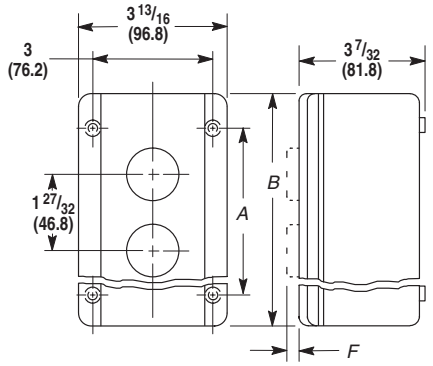

Enclosure Dimensions					
Dim.	No. of Units				
	1	2	3	4	6
A	2-3/4 (69.9)	4-1/2 (114.3)	6-1/4 (158.8)	8 (203.2)	12-1/8 (308)
B	4-3/16 (106.4)	5-7/8 (144.2)	7-9/16 (192.1)	9-1/2 (241.3)	13-1/2 (342.4)

Note: Mounting holes (4) — Screw shaft 13/64 (5.16) max. diameter.

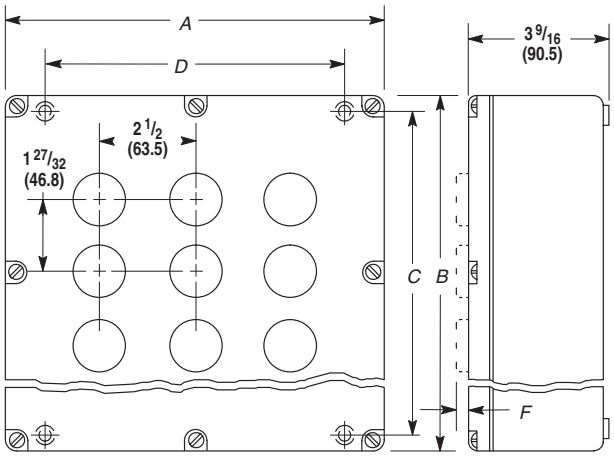

Enclosure Dimensions				
Dim.	No. of Units			
	6	9	12	16
A	7-1/4 (184.2)	9-3/4 (247.7)	9-3/4 (247.7)	12-1/2 (317.5)
B	9 (228.6)	9 (228.6)	11 (279.4)	11 (279.4)
C	8-1/4 (209.6)	8-1/4 (209.6)	10-1/8 (257.2)	10-1/8 (257.2)
D	5-3/8 (136.5)	7-7/8 (200)	7-7/8 (200)	10-5/8 (269.9)

Note: Mounting holes (4) — Screw shaft 7/32 (5.56) max. diameter.

F Dimension

Type of Unit		Dimension F
Push Buttons	Flush Extended Extended Mushroom Selector Cylinder Lock	15/32 (11.9) 21/32 (16.7) 1 (25.4) 7/8 (22.2) 1-13/16 (46)
Selector Switches	Standard Cylinder Lock Coin Slot	1-7/32 (30.9) 2-7/16 (61.9) 3/4 (19.1)
Pilot Light		1-1/8 (28.6)
Potentiometers		1-1/16 (27)

Conduit Openings

General Class	Description	No. of Units ❶						
		1...4	6	9	12	16	20	25
Surface Mounted Enclosure	Die Cast	3/4" 14 N.P.T.	1" 11-1/2 N.P.T.	1" 11-1/2 N.P.T.	1" 11-1/2 N.P.T.	1-1/2" 11-1/2 N.P.T.	—	—

❶ Number of units that can be mounted in the enclosure.

Artisan Technology Group - Quality Instrumentation ... Guaranteed | (888) 88-SOURCE | www.artisantg.com

Dimensions in inches (millimeters). Dimensions are not intended to be used for manufacturing purposes.

Enclosures, Continued (800T only)

Pendant Stations

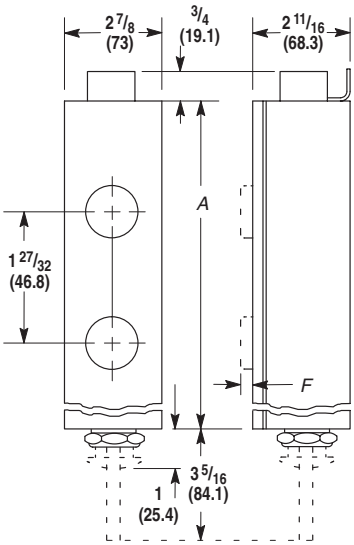

No. of Units	Dimension A
2	5-13/16 (147.6)
3	7-21/32 (194.5)
4	9-1/2 (241.3)
5	11-11/32 (288.1)
6	13-3/16 (335)
7	15-1/32 (381.7)
8	16-7/8 (428.6)
9	18-23/32 (475.4)
10	20-9/16 (522.3)

Sheet Metal Enclosures

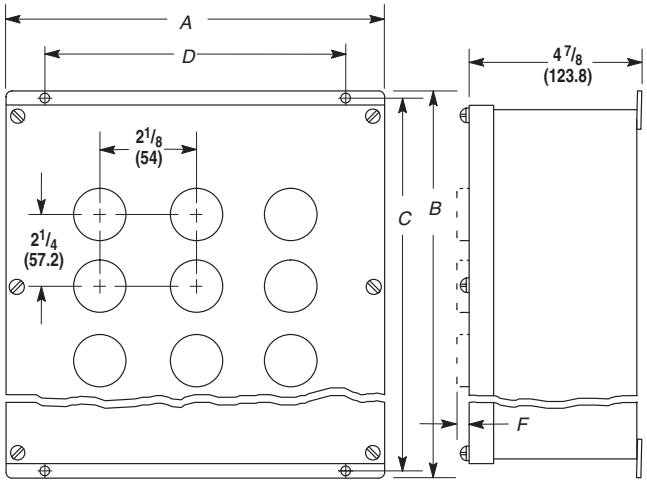

Enclosure Dimensions						
Dim.	No. of Units					
	6	9	12	16	20	25
A	6-15/16 (176.2)	8-11/16 (220.7)	8-11/16 (220.7)	10-7/16 (265.1)	10-7/16 (265.1)	12-1/2 (317.5)
B	11-1/8 (282.6)	11-1/8 (282.6)	13-1/2 (342.9)	13-1/2 (342.9)	15-7/8 (403.2)	15-7/8 (403.2)
C	10-1/2 (266.7)	10-1/2 (266.7)	12-7/8 (370)	12-7/8 (370)	15-1/4 (387.4)	15-1/4 (387.4)
D	5 (127)	6-3/4 (171.5)	6-3/4 (171.5)	8-1/2 (215.9)	8-1/2 (215.9)	10-1/4 (260.4)

Note: Mounting holes (4) — Screw shaft 7/32 (5.56) max. diameter.

F Dimension

Type of Unit		Dimension F
Push Buttons	Flush Extended Extended Mushroom Selector Cylinder Lock	15/32 (11.9) 21/32 (16.7) 1 (25.4) 7/8 (22.2) 1-13/16 (46)
Selector Switches	Standard Cylinder Lock Coin Slot	1-7/32 (30.9) 2-7/16 (61.9) 3/4 (19.1)
Pilot Light		1-1/8 (28.6)
Potentiometers		1-1/16 (27)

Conduit Openings

General Class	Description	No. of Units ❶						
		1...4	6	9	12	16	20	25
Surface Mounted Enclosure	Sheet Metal	None — Drilled to suit by customer.						
Pendant Type Enclosure	with Opening in Bottom	No. of Units ❶						
		2...5			6...10			
		1 (25.4) Conduit Hub			1-1/4 (31.8) Conduit Hub			
	with Opening in Cover	1 (25.4) Conduit Hub			1-1/4 (31.8) Conduit Hub			

❶ Number of units that can be mounted in the enclosure.

Artisan Technology Group - Quality Instrumentation ... Guaranteed | (888) 88-SOURCE | www.artisantg.com

Dimensions in inches (millimeters). Dimensions are not intended to be used for manufacturing purposes.

Enclosures (800H only)

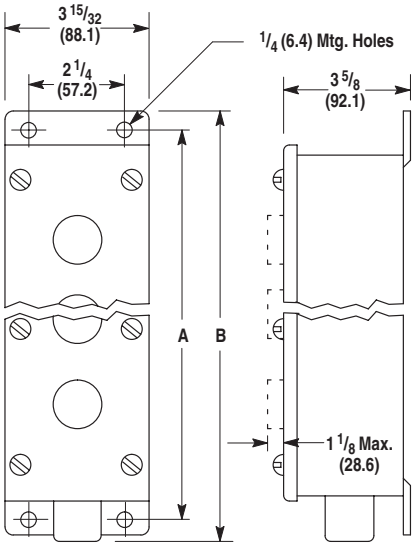

Type 4/4X/13 Stainless Steel
Watertight, Oiltight, Corrosion Resistant Enclosure

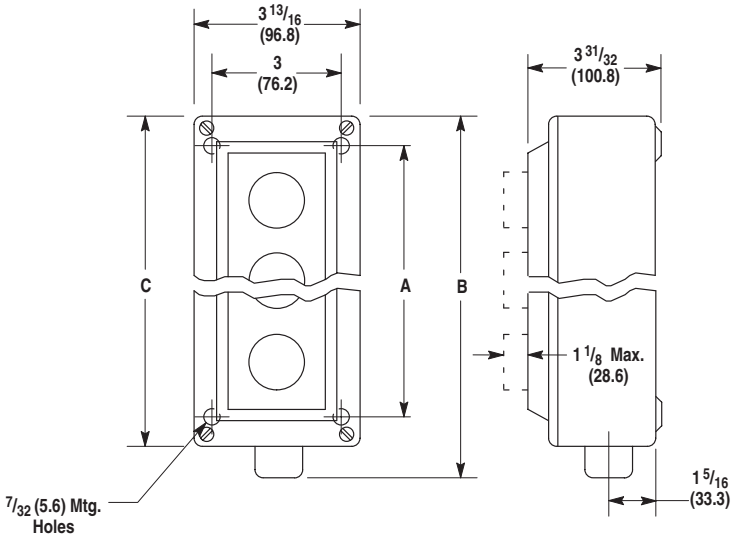

Type 4/4X/13 Rosite Glass Polyester
Watertight, Oiltight, Corrosion Resistant Enclosure

Dimension	Type 4/4X/13 Stainless Steel							
	Number of Units							
	1	2	3	4	5	6	7	8
A	5-5/32 (131)	7 (177.8)	8-27/32 (224.6)	10-11/16 (271.5)	12-17/32 (318.3)	14-3/8 (365.1)	16-7/32 (412)	18-1/16 (458.8)
B	6-13/32 (162.7)	8-1/4 (209.6)	10-1/8 (257.2)	11-31/32 (304)	14-1/32 (356.4)	15-7/8 (403.2)	17-3/4 (450.8)	19-19/32 (497.7)
C	—				—			
Conduit Knockout Size	—				—			
Pipe Tap Size	3/4 (19.1)				1 (25.4)			
Approximate Shipping Wt. lbs (kg)	2-3/4 (1.3)	3-3/4 (1.7)	4-3/4 (2.2)	5-3/4 (2.6)	6-3/4 (3.1)	7-3/4 (3.5)	8-3/4 (4)	9-3/4 (4.4)

Dimension	Type 4/4X/13 Rosite					
	Number of Units					
	1	2	3	4	5	6
A	4-1/2 (114.3)	4-1/2 (114.3)	6-1/4 (158.8)	8 (203.2)	12-1/8 (308)	12-1/8 (308)
B	7-1/32 (178.6)	7-1/32 (178.6)	8-23/32 (221.5)	10-21/32 (270.7)	14-7/8 (377.8)	14-7/8 (377.8)
C	5-7/8 (149.2)	5-7/8 (149.2)	7-9/16 (192)	9-1/2 (241.8)	13-1/2 (342.9)	13-1/2 (342.9)
Conduit Knockout Size	—				—	
Pipe Tap Size	3/4 (19.1)				1 (25.4)	
Approximate Shipping Wt. lbs (kg)	2 (.9)	2 (.9)	2-1/2 (1.1)	3 (1.4)	4 (1.8)	4 (1.8)

Artisan Technology Group - Quality Instrumentation ... Guaranteed | (888) 88-SOURCE | www.artisantg.com

Dimensions in inches (millimeters). Dimensions are not intended to be used for manufacturing purposes.

Enclosures, Continued (800H only)

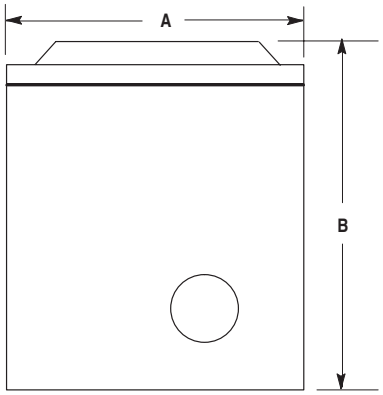

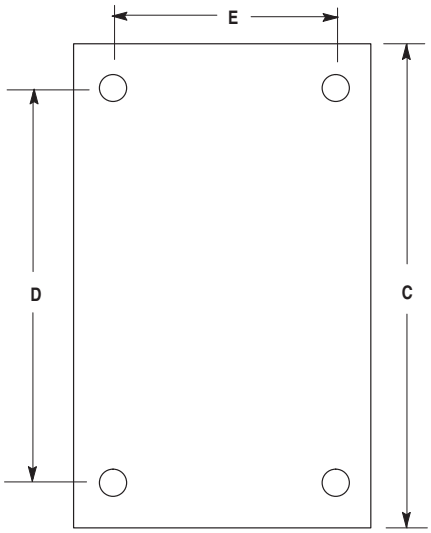

Dimension	Fiberglass Type 4/4X/12/13		
	Number of Units		
	1	2	3
A x B x C	4-1/2 x 5-3/16 x 6 (114.3 x 131.8 x 152.4)	4-1/2 x 5-3/16 x 8 (114.3 x 131.8 x 203.2)	6-1/2 x 5-7/16 x 8 (165.1 x 138.1 x 203.2)
D x E	4-3/4 x 2 (120.7 x 50.8)	6-3/4 x 2 (171.5 x 50.8)	6-3/4 x 4 (171.5 x 101.6)
Conduit Knockout Size	3/4 (19.1)	1 (25.4)	1 (25.4)
Approximate Shipping Wt. lbs (kg)	2 (0.9)	1/4 (1.0)	3 (1.4)

Artisan Technology Group - Quality Instrumentation ... Guaranteed | (888) 88-SOURCE | www.artisantg.com

Bulletin 800R/30.5 mm Push Button Stations Hermetically Sealed for Division 2/Zone 2

- Hazardous Location Push Button Stations
- Classes I and II Division 2/Zone 2
- 30.5 mm Mounting Hole
- Types 4/13 and 4/4X/13

Table of Contents

Specifications 79
800T/H Push Button Operators 17
Stations
Complete Assembled, Metallic Enclosures 81
Complete Assembled, Non-Metallic Enclosures 82
Custom Built Stations 83
Enclosures Only 83
Approximate Dimensions and Shipping Weights 84

Specifications ❶

Electrical Ratings		
Contact Ratings		Refer to the Contact Ratings tables below.
Dielectric Strength		2200V for one minute, 1300V for one minute (Logic Reed)
Electrical Design Life Cycles		1,000,000 at maximum rated load, 200,000 at maximum rated load (Logic Reed)
Mechanical Ratings		
Vibration		10…2000 Hz 1.52mm displacement (peak-to-peak) Max./10 G Max. (except Logic Reed)
Shock		1/2 cycle sine wave for 11 milliseconds ≥ 25 G (contact fragility) and no damage at 100 G
Degree of Protection		Type 4/4X/13, 4/13; Watertight/Corrosion-Resistant IEC 529 IP66/65
Mechanical Design Life Cycles		
Push Buttons	(Momentary, Non-Illuminated) (Momentary, Illuminated) (Push-Pull/Twist-to-Release)	10,000,000 min. 250,000 min. 250,000 min.
Selector Switches	(Non-Illuminated) (Illuminated)	1,000,000 min. 200,000 min.
All other devices		200,000 min.
Contact Operation		Logic Reed and Sealed Switch Contact Blocks:Single break magnetic
Typical Operating Forces		
Operators without contact blocks		Flush, Extended, Standard Mushroom, Jumbo Plastic Mushroom: 2 lbs max. Maintained Selector Switch: 3.6 in.-lbs maximum
Spring Return Selector Switches		3.6 in.-lbs to stop 0.2 in.-lbs to return
Illuminated Push Buttons and Push-to-Test Pilot Lights		5 lbs maximum
3-Position Push-Pull		8 lbs maximum push to in position or pull to center position (15 lbs maximum pull to out position)
Push-Pull and Push-Pull/Twist		9 lbs maximum push or pull 30 in.-oz. maximum twist, 6 in.-oz. minimum return
Contact Blocks	Logic Reed Sealed Switch Stackable Sealed Switch	1 lb maximum 3 lbs maximum at 0.205" plunger travel 1 lb maximum
Environment		
Temperature Range	Operating Storage	–40...+131°F (–40...+55°C) –40...+185°F (–40...+85°C)
Note: Operating temperatures below freezing are based on the absence of moisture and liquids. Contact your local Allen-Bradley distributor for use in lower temperature applications.		
Humidity		50% at +104°F (+40°C)

❶ Performance Data — See Industrial Controls Catalog, page Important-2.

Artisan Technology Group - Quality Instrumentation ... Guaranteed | (888) 88-SOURCE | www.artisantg.com

Control Stations

Bulletin 800R control stations are designed for Division 2/Zone 2 hazardous locations. They consist of Bulletin 800H (Type 4/4X/13) or Bulletin 800T (Type 4/13) operators with sealed contact blocks. Bulletin 800R units are available as factory assembled stations or as components for field assembly.

Hazardous Locations

Since the contacts are enclosed in a hermetically sealed chamber, the contact block is suitable for use in Class I and II, Division 2/Zone 2 Groups A, B, C, D, F and G hazardous locations and is listed by Underwriters Laboratories for this class of service. Complete stations as shown on page 81 can be used for Class I and II Division 2/Zone 2 applications. The individual components shown in the 800T and 800H sections are also suitable for Class I and II Division 2/Zone 2 locations providing they are suitably mounted by the customer in an enclosure as required for the application and by applicable codes and laws.
Class I Zone 2 protection method Ex nW IIc Temp. Code T3/T6, Demko 97.Y.122018 U applies to operators and contacts.
Per National Electrical Code: Zone 2. In Class I, Zone 2 locations, all wiring methods permitted for Class I, Division 2, Class I, Division 1 or Division 2, and Class I, Zone 0 or Zone 1 locations, including requirements for sealing, shall be permitted.
Note: Allen-Bradley Logic Reed contact blocks are also listed by Underwriters Laboratories for the Division 2/Zone 2 hazardous locations listed above.

CAUTION:
The complete stations and individual components listed herein **are not suitable for use in Class I and II Division 1 hazardous locations**. For Class I and II Division 1 hazardous locations, order Bulletin 800H Type 7 & 9 stations and units.

Sealed Switch Contact Ratings

Maximum continuous current I_{th} 5 A. Bulletin 800T and 800H units have control circuit ratings with sealed switch contact blocks as follows:

Max. Opertnl. Volts Ue	Utilization Category		Rated Operational Currents		
	IEC	NEMA	Volts Ue	Make	Break
AC 600	AC-15	B600	120…600 0…120	3600 VA 30 A	360 VA 3 A
DC 300	DC-13	P300	24…300 0…24	138 VA 5.0 A	

Stackable Sealed Switch Contact Ratings

Maximum continuous current I_{th} 2.5 A. Bulletin 800T and 800H units have control circuit ratings with sealed switch contact blocks as follows:

Max. Opertnl. Volts Ue	Utilization Category		Rated Operational Currents		
	IEC	NEMA	Volts Ue	Make	Break
AC 300	AC-15	C300	120…300 0…120	1800 VA 15 A	180 VA 1.5 A
DC 150	DC-13	Q150	24…150 0…24	69 VA 2.5 A	

Logic Reed Contact Ratings

Maximum DC: 30V, 0.06 A Maximum AC: 150V, 0.15 A
Should only be used with resistive loads.

Approvals

UL Listed — File: E10314
Guide: NOIV
CSA Certified: LR11924
IEC Compliance Demko 97.Y.122018 U

Artisan Technology Group - Quality Instrumentation ... Guaranteed | (888) 88-SOURCE | www.artisantg.com

30.5 mm Push Button Stations Hermetically Sealed for Division 2/Zone 2

Type 4/13 and 4/4X/13 for Hazardous Locations

Complete Assembled Stations, Metallic Enclosures

Class I, Division 2/Zone 2

Push button operators for Class I, Division 2/Zone 2 are offered in Bulletin 800T/H, on page 17.

Surface Mount
Cat. No. 800R-1TA

Booted Operator Station
Cat. No. 800R-1HA4T

Bootless Operator Station
Cat. No. 800R-1HA4TL

Operator	Contact Symbol	Contact Action	Button Type	Button Color	Legend Marking	Cast Aluminum Enclosures ❶	Stainless Steel Enclosures ❷	
						Surface Mount	Booted Operator Station	Bootless Operator Station
						Cat. No.	Cat. No.	Cat. No.
One Push Button	1 N.O. - 1 N.C.	Momentary	Flush	Green	START	800R-1TB	800R-1HB4T	800R-1HB4TL
		Momentary	Extended	Red	STOP	800R-1TA	800R-1HA4T	800R-1HA4TL
		Momentary	Flush	Black	No Legend	800R-1TX	800R-1HX4T	800R-1HX4TL
Two Push Buttons	1 N.O. - 1 N.C. Each Button	Momentary	Flush Extended	Green Red	START STOP	800R-2TA	800R-2HA4T	800R-2HA4TL
		Momentary	Flush Flush	Black Black	No Legends	800R-2TX	800R-2HX4T	800R-2HX4TL
One Pilot Light Two Push Buttons	1 N.O. - 1 N.C. Each Button	Momentary	120V AC Flush Extended	Red Green Red	No Legend START STOP	800R-2TAR	800R-2HAR4T	800R-2HAR4TL
		Momentary	120V AC Flush Flush	Red Black Black	No Legends	800R-2TXR	800R-2HXR4T	800R-2HXR4TL
3-Position Selector Switch	1 N.O. - 1 N.C.	Maintained	Knob Lever	Black with white insert	HAND OFF AUTO	800R-R3TA	—	800R-R3HA4TL
		Maintained	Knob Lever	Black with white insert	No Legend	800R-R3TX	—	800R-R3HX4TL
One Push Button	1 N.O. - 1 N.C.	Maintained	Push-Pull/ Twist	Red	EMRG. STOP	800R-1TAM	—	800R-1HAM4TL
Two Push Buttons	1 N.O. - 1 N.C.	Maintained	Flush Extended	Green Red	START STOP	800R-2TAM	800R-2HAM4T	800R-2HAM4TL
			Flush Flush	Black Black	No Legends	800R-2TXM	800R-2HXM4T	800R-2HXM4TL

❶ Type 4/13
❷ Type 4/4X/13

Approximate Dimensions — Page 84

Artisan Technology Group - Quality Instrumentation ... Guaranteed | (888) 88-SOURCE | www.artisantg.com

30.5 mm Push Button Stations Hermetically Sealed for Division 2/Zone 2

Type 4/13 and 4/4X/13 for Hazardous Locations

Complete Assembled Stations, Non-Metallic Enclosures Type 4/4X/13

Class I, Division 2/Zone 2

Push button Operators for Class I, Division 2/Zone 2 are offered in Bulletin 800T/H, on page 17.

Booted Operator Station
Cat. No. 800R-1HA4R

Bootless Operator Station
Cat. No. 800R-1HA4RL

Operator	Contact Symbol	Contact Action	Button Type	Button Color	Legend Marking	Rosite Glass Polyester Enclosures	
						Booted Operator Station	Bootless Operator Station
						Cat. No.	Cat. No.
One Push Button	1 N.O. - 1 N.C.	Momentary	Flush	Green	START	800R-1HB4R	800R-1HB4RL
		Momentary	Extended	Red	STOP	800R-1HA4R	800R-1HA4RL
		Momentary	Flush	Black	No Legend	800R-1HX4R	800R-1HX4RL
Two Push Buttons	1 N.O. - 1 N.C. Each Button	Momentary	Flush Extended	Green Red	START STOP	800R-2HA4R	800R-2HA4RL
		Momentary	Flush Flush	Black Black	No Legends	800R-2HX4R	800R-2HX4RL
One Pilot Light Two Push Buttons	1 N.O. - 1 N.C. Each Button	Momentary	120V AC Flush Extended	Red Green Red	No Legend START STOP	800R-2HAR4R	800R-2HAR4RL
		Momentary	120V AC Flush Flush	Red Black Black	No Legends	800R-2HXR4R	800R-2HXR4RL
3-Position Selector Switch	1 N.O. - 1 N.C.	Maintained	Knob Lever	Black with white insert	HAND OFF AUTO	—	800R-R3HA4RL
		Maintained	Knob Lever	Black with white insert	No Legend	—	800R-R3HX4RL
One Push Button	1 N.O. - 1 N.C.	Maintained	Push-Pull/ Twist	Red	EMERG. STOP	—	800R-1HAM4RL
Two Push Buttons	1 N.O. - 1 N.C.	Maintained	Flush Extended	Green Red	START STOP	800R-2HAM4R	800R-2HAM4RL
			Flush Flush	Black Black	No Legends	800R-2HXM4R	800R-2HXM4RL

Approximate Dimensions — Page 84

Artisan Technology Group - Quality Instrumentation ... Guaranteed | (888) 88-SOURCE | www.artisantg.com

Custom Built Stations

Description

The tables on pages 81 and 82 list the most commonly used push button stations. Stations not listed in the tables may be ordered as custom built stations.

Cat. No.

The cat. no. used to identify custom built Bulletin 800R push button stations, which are built at the factory, will be cat. nos. listed for the enclosure only, except letter **W** will be substituted for the letter **Z** and with a station serial number.

Ordering Information

The following information is required when ordering custom built push button stations.

1. Cat. no. of enclosure.
2. Cat. no. of control units.
3. Legend plate cat. no. and/or marking for each unit.
4. Specify vertical or horizontal mounting.
5. Specify desired operator mounting sequence. Inclusion of a sketch is recommended. If no information is given, standard configuration will be used.

Enclosures Only

Die Cast
Cat. No. 800R-2TZ

Stainless Steel
Cat. No. 800R-2HZ4

Rosite Glass Polyester
Cat. No. 800R-2HZ4R

Fiberglass
Cat. No. 800H-2HZ4Y

Units ❶	Die Cast (Type 4/13)	Stainless Steel (Type 4/4X/13)	Rosite Glass Polyester (Type 4/4X/13)	Fiberglass ❷ (Type 4/4X/12/13)
	Cat. No.	Cat. No.	Cat. No.	Cat. No.
1	800R-1TZ	800R-1HZ4	800R-1HZ4R	800H-1HZ4Y
2	800R-2TZ	800R-2HZ4	800R-2HZ4R	800H-2HZ4Y
3	800R-3TZ	800R-3HZ4	800R-3HZ4R	800H-3HZ4Y
4	800R-4TZ	800R-4HZ4	800R-4HZ4R	—
5	—	800R-5HZ4	800R-5HZ4R	—
6	800R-6TZ	800R-6HZ4	800R-6HZ4R	—

❶ Number of units that can be mounted in enclosure.
❷ Extra deep. Accomodates two levels of stackable sealed switch contact blocks.

Note: Enclosure and conduit dimensions are detailed on page 84, except for the fiberglass enclosures which are found on page 78.

Artisan Technology Group - Quality Instrumentation ... Guaranteed | (888) 88-SOURCE | www.artisantg.com

30.5 mm Push Button Stations Hermetically Sealed for Division 2/Zone 2

Approximate Dimensions and Shipping Weights

Type 4/13 and 4/4X/13 for Hazardous Locations

Dimensions in inches (millimeters). Dimensions are not intended to be used for manufacturing purposes.

Type 4/4X/13 Stainless Steel Watertight/Oiltight/ Corrosion-Resistant Enclosure

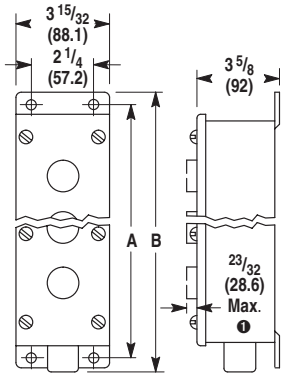

Type 4/4X/13 Rosite Glass Polyester Watertight/Oiltight/ Corrosion-Resistant Enclosure

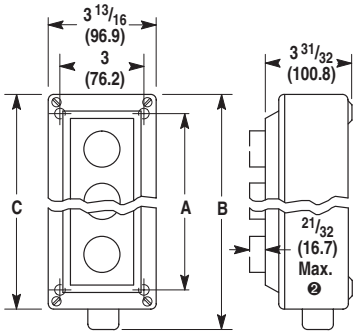

Type 4/13 Watertight/Oiltight Cast Aluminum Enclosure

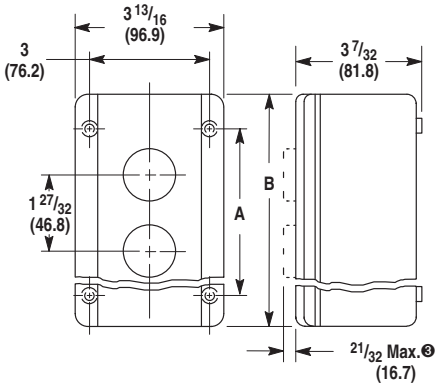

Dimension	Number of Units					
	1	2	3	4	5	6
Stainless Steel Type 4/4X/13						
A	5-5/32 (135)	7 (178)	8-27/32 (225)	10-11/16 (271)	12-17/32 (318)	14-3/8 (360)
B	6-13/32 (163)	8-1/4 (210)	10-1/8 (257)	11-31/32 (304)	14-1/32 (359)	15-7/8 (403)
Pipe Tap Size	3/4				1	
Glass Polyester Type 4/4X/13						
A	4-1/2 (114)	4-1/2 (114)	6-1/4 (159)	8 (203)	12-1/8 (308)	12-1/8 (308)
B	7-1/32 (181)	7-1/32 (181)	8-23/32 (221)	10-21/32 (271)	14-7/8 (378)	14-7/8 (378)
C	5-7/8 (149)	5-7/8 (149)	7-9/16 (192)	9-1/2 (241)	13-1/2 (343)	13-1/2 (343)
Pipe Tap Size	3/4				1	
Cast Aluminum Type 4/13						
A	2-3/4 (69.8)	4-1/2 (114)	6-1/4 (159)	8 (203)	—	12-1/8 (308)
B	4-3/16 (106)	5-7/8 (149)	7-9/16 (192)	9-1/2 (241)	—	13-1/2 (343)
Conduit Opening	3/4" 14 N.P.T.				—	1" 11-1/2 N.P.T.

Mounting Instructions (for Panel Mounting)

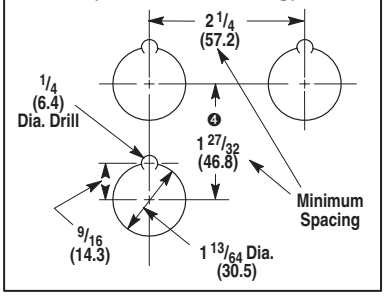

❶ Selector switch is 1-5/32 (29.4) maximum; pilot light is 1-7/32 (31).
❷ Selector switch is 1-3/32 (27.8) maximum; pilot light is 1-5/32 (29.4) maximum.
❸ Selector switch is 1-7/32 (30.9) maximum; pilot light is 1-9/32 (32.5).
❹ Minimum vertical spacing dimension for jumbo legend plate is 2-15/32 (62.7).

Operator Extension in Front of Panel ❺

Type 4/4X/13 Booted Flush and Extended Head Push Button

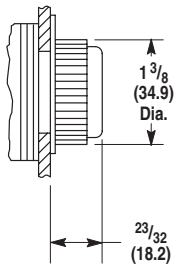

Type 4/4X/13 Pilot Light

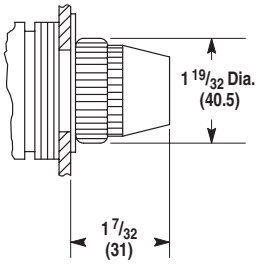

Type 4/13 and Type 4/4X/13 Bootless Flush and Extended Head Push Button

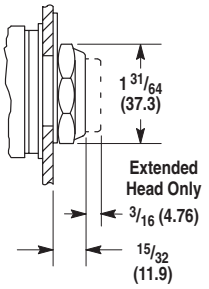

Type 4/13 Pilot Light

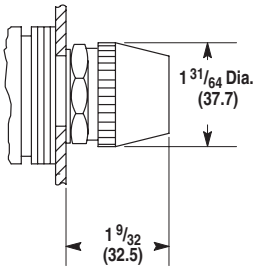

Type 4/13 and 4/4X/13 Standard Knob Selector Switches

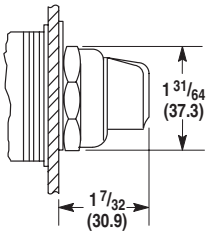

❺ See pages 65…76 for additional Type 4/13 and Type 4/4X/13 outlines.

Artisan Technology Group - Quality Instrumentation ... Guaranteed | (888) 88-SOURCE | www.artisantg.com

Bulletin 800T — 18mm Pilot Lights

- 18 mm Mounting Hole
- Type 4/13 Watertight/Oiltight
- Small Pilot Lights

Table of Contents

Specifications 17
Pilot Lights
Standard. 86
Push-to-Test 86
Dual Input. 86
Accessories
Legend Plates 87
Color Caps 87
Guard 87
Replacement Lamps 87
Dimensions 88

Small Pilot Lights Type 4/13, Class I, Division 2

18 mm Pilot Light
Cat. No. 800T-PS16R

18 mm Push-to-Test Pilot Light
Cat. No. 800T-PST16R

Type	Lamp	Voltage	Color	Pilot Light	Push-To-Test ❶❷❸
				Cat. No.	Cat. No.
Transformer	Incandescent	120 AC 50/60 Hz	Red	800T-PS16R	800T-PST16R
Full Voltage		24 AC/DC		800T-QS24R	800T-QST24R
Dual Input Diode ❶		120 AC		800T-PSD16R	—
		24 AC/DC		800T-PSD24R	—
Dual Input Transformer ❶ ❸		120 AC 50/60 Hz		800T-PSDT16R	—
Transformer	LED	120 AC 50/60 Hz	Red	800T-PSH16R	800T-PSTH16R
Full Voltage		24 AC/DC		800T-QSH24R	800T-QSTH24R
		120 AC		800T-QSH10R	800T-QSTH10R
Full Voltage	Neon	120 AC/DC	Amber	800T-RS10A	800T-RST10A

❶ See page 65 for Typical Wiring Diagram.
❷ Type 13 only.
❸ UL/CSA Class I, Division 2 rating not available.

Artisan Technology Group - Quality Instrumentation ... Guaranteed | (888) 88-SOURCE | www.artisantg.com

Small Pilot Light Type 4/13, Class I, Division 2

800T –	PS	D		16	R
	a	*b*	*c*	*d*	*e*

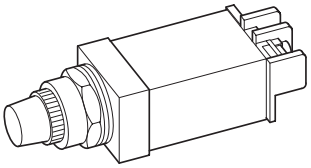

a

Power Module Type	
Code	**Description**
PS	Transformer (or Dual Input)
QS	Full Voltage
RS	Neon ❶

b

Lamp Test Options	
Code	**Description**
Blank	No Test Option
D	Dual Input Diode
DT	Dual Input Transformer Relay ❻
T	Push-to-Test ❻

c

Illumination Options	
Transformer	
Code	**Description**
Blank	Incandescent
F	Flashing Incandescent ❷
H	LED ❸
Full Voltage	
Code	**Description**
Blank	Incandescent
F	Flashing Incandescent ❷
H	LED ❸
Neon	
Code	**Description**
Blank	No Options
Dual Input	
Code	**Description**
Blank	Incandescent
H	LED ❸

d

Voltage	
Transformer	
Code	**Description**
16	120V AC 50/60 Hz
26	240V AC 50/60 Hz
Full Voltage	
Code	**Description**
06	6V AC/DC
12	12V AC/DC
24	24V AC/DC
32	32V AC/DC ❹
48	48V AC/DC ❹
10	120V AC/DC ❹
13	130V AC/DC ❹

d (cont'd)

Voltage	
Neon	
Code	**Description**
10	120V AC/DC
20	240V AC/DC
Dual Input	
Code	**Description**
16	120V AC 50/60 Hz
24	24V AC/DC ❺

e

Lens Color	
Plastic	
Code	**Description**
Blank	No Lens
A	Amber
B	Blue
C	Clear
G	Green
R	Red
W	White

❶ Neon is only available in amber or clear.
❷ Flashing lamps are only available in 6V full voltage units and all transformer units.
❸ LEDs available in red, green, amber, blue, and white. White LEDs only available in 6V and 24V full voltage and all transformer units. LED color must match lens color, except clear lens supplied with white LED and white lens supplied with amber LED. All LEDs except 120V have an internal shunt resistor for use with solid-state outputs.
❹ LED only.
❺ Dual input diode only.
❻ UI/CSA Class I, Division 2 rating not available.

Accessories – Page 87
Legend Plates – Page 87
Approximate Dimensions – Page 88

Artisan Technology Group - Quality Instrumentation ... Guaranteed | (888) 88-SOURCE | www.artisantg.com

Type 4/13, Watertight/Oiltight

Legend Plates

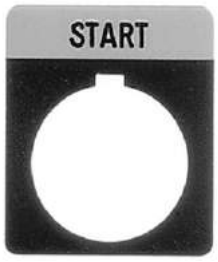

Type A Legend Plate
Cat. No. 800T-N515

Description	Cat.No.
Blank	
Type A	800T-N515
Type B	800T-N516
With Custom Marking ❶	
Type A with Text	800T-N515E
Type B with Text	800T-N516E

Color Caps

Red Color Cap
Cat. No. 800T-N122R

Color	Cat. No.
Red	800T-N122R
Green	800T-N122G
Amber	800T-N122A
Blue	800T-N122B
White	800T-N122W
Clear	800T-N122C

Guard

Guard for Illuminated Push Buttons
Cat. No. 800T-N226

Description	Cat. No.
Guard for Illuminated Push Buttons	800T-N226

❶ Text must be supplied.

Custom Text Guidelines

Legend Type	Number of Lines	Maximum Number of Characters
A	1	9
B	2	13

Replacement Lamps

Lamp	Type	Typical Current	Lamp Voltage	ANSI Number	Cat. No.
Incandescent	Full Voltage/All Transformer	150/250 mA	6 AC/DC	755/1866	800T-N65
	Full Voltage	80 mA	14 AC/DC	756	800T-N141
	Full Voltage	70 mA	28 AC/DC	757	800T-N157
	Dual Input Diode	57 mA	24 AC/DC	24MB	800T-N180
	Flashing	150 mA	6 AC/DC	267	800T-N212
	Dual Input Diode	22 mA	130 AC/DC	949	800T-N169
	Dual Input Transformer	150/250 mA	6 AC/DC	755/1866	800T-N65
Neon	—	2 mA	120 AC/DC	B2A	609-N9
Lamp	**Type**	**Typical Current ❷**	**Lamp Voltage**	**Leakage Current**	**Cat. No.**
LED ❸	Full Voltage/All Transformer	14 mA/48 mA	6 AC/DC	3 mA	800T-N318x ❹
	Full Voltage	13 mA/22 mA	12 AC/DC	3 mA	800T-N362x ❹
		13 mA/21 mA	24 AC/DC	3 mA	800T-N319x ❹
		12 mA/17 mA	32 AC/DC	3 mA	800T-N363x ❹
		9 mA/14 mA	48 AC/DC	3 mA	800T-N364x ❹
		3.3 mA/6 mA	120 AC	—	800T-N320x ❹
		4.5 mA/6.2 mA	130 AC/DC	3 mA	800T-N321x ❹

❷ Typical current draw varies with LED color. The first mA value is for a green or blue LED and the second mA value is for a red or amber LED.
❸ All LEDs except 120V have an internal shunt resistor for use with solid-state outputs. LEDs will not Illuminate below listed leakage current.
❹ To complete the cat. no. replace the **x** with the first letter of the desired color: **A**mber, **G**reen, **R**ed, **B**lue, or **W**hite. White LEDs only available in 6V and 24V.

Artisan Technology Group - Quality Instrumentation ... Guaranteed | (888) 88-SOURCE | www.artisantg.com

Dimensions in inches (millimeters). Dimensions are not intended to be used for manufacturing purposes.

Mounting Instructions for 18 mm Small Pilot Lights

Type A Legend Plate

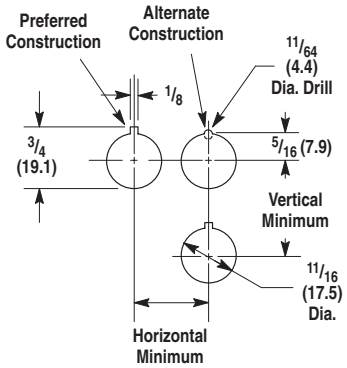

Cat. No. 800T-N515

Device	Dimension	
	Horizontal	Vertical
800T-PS, PSD, PST, QS, QST and RST	31/32 (24.6)	1-5/32 (29.4)
800T-PSDT	1-3/64 (26.6)	1-13/64 (30.6)

Type B Legend Plate

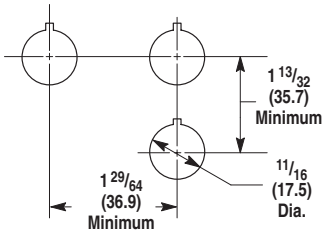

Cat. No. 800T-N516

Small Pilot Light Including Push-To-Test

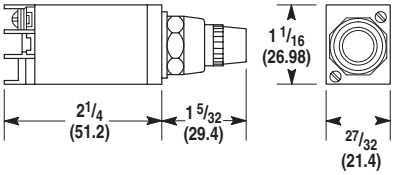

Approximate Shipping Weight
3 oz. (0.08 kg)

Small Pilot Light Dual Input (Diode)

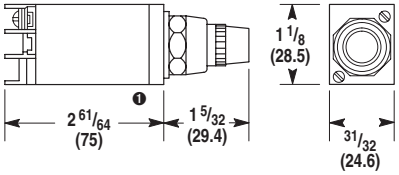

Approximate Shipping Weight
3 oz. (0.08 kg)

Legend Plate for Small Pilot Light Type A Legend

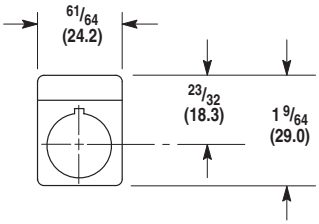

Cat. No. 800T-N515

Legend Plate for Small Pilot Light Type B Legend

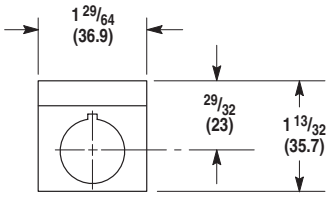

Cat. No. 800T-N516
(Automotive Industry Type)

❶ Transfer dual input pilot light dimension is 2-31/32 (75.4).

Artisan Technology Group - Quality Instrumentation ... Guaranteed | (888) 88-SOURCE | www.artisantg.com

Artisan Technology Group - Quality Instrumentation ... Guaranteed | (888) 88-SOURCE | www.artisantg.com

Artisan Technology Group - Quality Instrumentation ... Guaranteed | (888) 88-SOURCE | www.artisantg.com

Artisan Technology Group - Quality Instrumentation ... Guaranteed | (888) 88-SOURCE | www.artisantg.com

Artisan Technology Group - Quality Instrumentation ... Guaranteed | (888) 88-SOURCE | www.artisantg.com

Artisan Technology Group - Quality Instrumentation ... Guaranteed | (888) 88-SOURCE | www.artisantg.com

Artisan Technology Group - Quality Instrumentation ... Guaranteed | (888) 88-SOURCE | www.artisantg.com

Artisan Technology Group - Quality Instrumentation ... Guaranteed | (888) 88-SOURCE | www.artisantg.com

Rockwell Automation

EC Declaration of Conformity

The undersigned, representing the following supplier

Allen-Bradley Company, Inc.
1201 South 2nd Street
Milwaukee, WI 53204
USA

and the authorised representative established within the Community

Rockwell Automation, Subsidiary of
Rockwell International GmbH
Düsselberger Str. 15
D-42781 Haan, Germany

herewith declare that the Products ***30 mm Push Buttons***

Product identification (brand and catalogue number/part number): ***Allen-Bradley 800H and 800T, followed by suffixes.***
(reference the attached list of catalogue numbers)

are in conformity with the provisions of the following EC Directive(s) when installed in accordance with the installation instructions contained in the product documentation:

73/23/EEC — *Low Voltage Directive as amended by 93/68/EEC*

and that the standards and/or technical specifications referenced below have been applied:

EN 60947-5-1:1997 including Amendment A1:1999 and Amendment A12:1997 — *Low-voltage switchgear and controlgear – Part 5: Control circuit devices and switching elements; Section 1: Electromechanical control circuit devices*

Year of CE Marking — *1995*

Supplier:

Signature
Name: Daniel L. Nachtigall
Position: Supervisor, Standards
Date: 05-Jun-2001

Authorised Representative in the Community:

i.V.
Signature
Name: Viktor Schiffer
Position: Engineering Manager
Date: 08-Jun-2001

Rockwell Automation

Catalogue number	*Series* [1]	*Description*
800H -AR		*Contact block operators*
800H -BR		*Contact block operators*
800H -CR		*Contact block operators*
800H -DR		*Contact block operators*
800H -FR		*Contact block operators*
800H -GR		*Contact block operators*
800H -HR		*Contact block operators*
800H - HR		*Contact block operators*
800H -JR		*Contact block operators*
800H - JR		*Contact block operators*
800H -NR		*Contact block operators*
800H -PR		*Contact block operators*
800H -QR		*Contact block operators*
800H -RR		*Contact block operators*
800H -UR		*Contact block operators*
800H -WK		*Contact block operators*
800H -R		*Contact block operators*
800T -A		*Contact block operators*
800T -B		*Contact block operators*
800T -D		*Contact block operators*
800T -E		*Contact block operators*
800T -F		*Contact block operators*
800T -G		*Contact block operators*
800T -H		*Contact block operators*
800T - H		*Contact block operators*
800T -J		*Contact block operators*
800T - J		*Contact block operators*
800T -K		*Contact block operators*
800T -M		*Contact block operators*
800T -N		*Contact block operators*
800T -P		*Contact block operators*
800T -Q		*Contact block operators*
800T -R		*Contact block operators*
800T -T		*Contact block operators*
800T -U		*Contact block operators*
800T -X		*Contact blocks*
800T - A		*Assembled stations*
800T - B		*Assembled stations*
800T - K		*Assembled stations*
800T - X		*Assembled stations*
800T - T		*Assembled stations*

1) *If no series number is given, then all series are covered*

Allen-Bradley push button products serve the world's industries with a proud tradition of quality and rugged design. We continue to set the standards in product value and quality by keeping the needs of our customers foremost in mind.

www.rockwellautomation.com

Corporate Headquarters
Rockwell Automation, 777 East Wisconsin Avenue, Suite 1400, Milwaukee, WI, 53202-5302 USA, Tel: (1) 414.212.5200, Fax: (1) 414.212.5201

Headquarters for Allen-Bradley Products, Rockwell Software Products and Global Manufacturing Solutions
Americas: Rockwell Automation, 1201 South Second Street, Milwaukee, WI 53204-2496 USA, Tel: (1) 414.382.2000, Fax: (1) 414.382.4444
Europe/Middle East/Africa: Rockwell Automation SA/NV, Vorstlaan/Boulevard du Souverain 36, 1170 Brussels, Belgium, Tel: (32) 2 663 0600, Fax: (32) 2 663 0640
Asia Pacific: Rockwell Automation, 27/F Citicorp Centre, 18 Whitfield Road, Causeway Bay, Hong Kong, Tel: (852) 2887 4788, Fax: (852) 2508 1846

Headquarters for Dodge and Reliance Electric Products
Americas: Rockwell Automation, 6040 Ponders Court, Greenville, SC 29615-4617 USA, Tel: (1) 864.297.4800, Fax: (1) 864.281.2433
Europe/Middle East/Africa: Rockwell Automation, Brühlstraße 22, D-74834 Elztal-Dallau, Germany, Tel: (49) 6261 9410, Fax: (49) 6261 17741
Asia Pacific: Rockwell Automation, 55 Newton Road, #11-01/02 Revenue House, Singapore 307987, Tel: (65) 6356-9077, Fax: (65) 6356-9011

Publication 800-SG001C-EN-P – November 2003
Supersedes 800-SG001B-EN-P – June 2001

Copyright © 2003 Rockwell Automation, Inc. All rights reserved. Printed in USA.

Artisan Technology Group - Quality Instrumentation ... Guaranteed | (888) 88-SOURCE | www.artisantg.com

Artisan Technology Group is an independent supplier of quality pre-owned equipment

Gold-standard solutions

Extend the life of your critical industrial, commercial, and military systems with our superior service and support.

We buy equipment

Planning to upgrade your current equipment? Have surplus equipment taking up shelf space? We'll give it a new home.

Learn more!

Visit us at **artisantg.com** for more info on price quotes, drivers, technical specifications, manuals, and documentation.

Artisan Scientific Corporation dba Artisan Technology Group is not an affiliate, representative, or authorized distributor for any manufacturer listed herein.

We're here to make your life easier. How can we help you today?

(217) 352-9330 | sales@artisantg.com | artisantg.com

ARTISAN® TECHNOLOGY GROUP