Terra Universal Series 300

Glove Box

Limited Availability
Parts Grade / As-Is

Open Web Page

https://www.artisantg.com/71357-1

All trademarks, brandnames, and brands appearing herein are the property of their respective owners.

ARTISAN TECHNOLOGY GROUP

Your **definitive** source for quality pre-owned equipment.

Artisan Technology Group
(217) 352-9330 | sales@artisantg.com | artisantg.com

- Critical and expedited services
- In stock / Ready-to-ship
- We buy your excess, underutilized, and idle equipment
- Full-service, independent repair center

Artisan Scientific Corporation dba Artisan Technology Group is not an affiliate, representative, or authorized distributor for any manufacturer listed herein.

TERRA UNIVERSAL.COM
Critical Environment Solutions

Quick-Start Operating Guide *Document No. 1800-13*

Stainless Steel Glove Boxes

(Series 300 – 600)

© Copyright 2010 Terra Universal Inc. All rights reserved. • Revised Sept. 2010

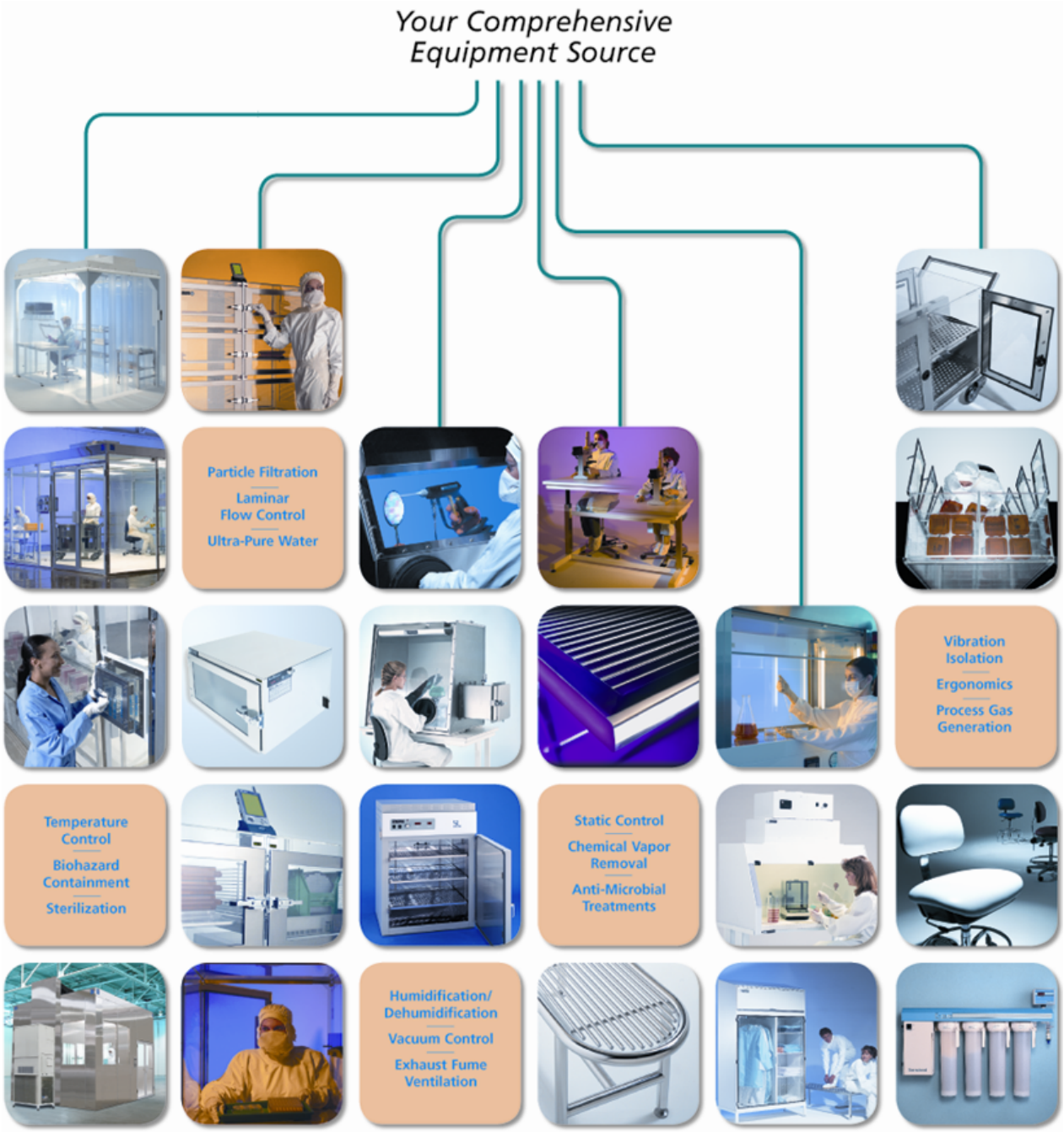

Terra Universal, Inc. • TerraUniversal.com • 800 S. Raymond Ave. • Fullerton, CA 92831 • TEL: (714) 578-6000 • FAX: (714) 578-6020

Artisan Technology Group - Quality Instrumentation ... Guaranteed | (888) 88-SOURCE | www.artisantg.com

© Copyright 2010 Terra Universal Inc. All rights reserved. • Revised Sept. 2010 • Document No. 1800-13 v2.0tm

Proprietary Notice

This manual pertains to proprietary devices manufactured by Terra Universal, Inc. Neither this document nor any portion of it may be reproduced in any way without prior written permission from Terra Universal.

Terra Universal makes no warranties applying to information contained in this manual or its suitability for any implied or inferred purpose. Terra Universal shall not be held liable for any errors this manual contains or for any damages that result from its use.

Safety Notice

A thorough familiarity with all operating guidelines is essential to safe operation of the product. Failure to observe safety precautions could result in poor performance, damage to the system or other property, or serious bodily injury or death.

The following symbols are intended to call your attention to two levels of hazard involved in operation:

CAUTION — **Cautions are used when failure to observe instructions could result in significant damage to equipment.**

WARNING — **Warnings are used when failure to observe instructions or precautions could result in injury or death.**

The information presented here is subject to change without notice.

1.0 Introduction

This manual provides information on installing and operating your Terra Stainless Steel Glove Box.

By studying this document carefully, you can be assured of a long, efficient service life from your system.

Related Manuals – Available for download from www.TerraUniversal.com:

- High-Performance Pass-Through Oven (Doc. No. 1800-11)
- Vacuum Antechamber (Doc. No. 1800-02)
- Glove and Sleeve Installation (Doc. No. 1800-43)
- Modular Pass-Through Oven (Doc. Np. 1800-14
- Vacuum Control Module (Doc. No. 1800-58)
- Filtration/Recirculation Modules (Doc. No. 1800-06)

2.0 Description

This manual provides information on installing and operating your Terra Universal Stainless Steel Glove Box (Series 300 - 600) with either the Glove Box Dual Purge System or with both the Glove Box Dual Purge System and NitroWatch. By studying it carefully, you can be assured of a long, efficient service life from your system.

There are three standard types of Stainless Steel Atmospheric Chambers with applications in a broad range of environmental control. The Series 300 Atmospheric Chamber is ideal for general uses that require a positive-pressure environment. The Series 400 Atmosphere Chamber is a larger chamber that will accommodate bulkier process equipment and also allows for connection to Terra's Vacuum Antechamber, which supports a vacuum down to 29.9" Hg. The Series 500 Full-View Atmospheric Chamber has transparent front and rear panels and combines the full visibility of a plastic glove box with the strength and versatility of a stainless steel chamber. Optional sliding access doors for the series 500 allow large items to be placed in and taken out easily. The Series 600 chamber features a transparent front panel. An optional remote blower can also be used with any of the chambers to draw out exhaust fumes that may be generated during some processes allowing for safe venting or for exhaust purification and safe indoor release.

Artisan Technology Group - Quality Instrumentation ... Guaranteed | (888) 88-SOURCE | www.artisantg.com

© Copyright 2010 Terra Universal Inc. All rights reserved. • Revised Sept. 2010 • Document No. 1800-13 v2.0tm

CAUTION: A stainless steel Automatic RB (Relief/Bleed) Valve is required on any chamber or air lock that incorporates the Dual Purge System. Be sure that your system is equipped with these valves before you connect it to the gas line.

Dual Purge System

Effective nitrogen control is provided by either the Glove Box Dual Purge System alone (for variable purge control), or the Glove Box Dual Purge System and Nitro Watch (for auto humidity control). These control systems greatly enhance the efficiency of the glove box by automatically regulating the nitrogen fed into the system.

The Dual Purge System provides a continuous low-level purge to maintain a constant internal positive pressure that helps to block out contaminants and economize on nitrogen. The minute it senses a drop in this positive pressure (such as hen an air lock is opened) it automatically initiates a temporary high level flow that quickly flushes out any moisture or contaminants that might enter the chamber. When the selectable threshold pressure is reestablished, the system then reactivates the economical low-level purge.

The Dual Purge System incorporates a flow-meter and pressure regulator (to control the incoming flow of nitrogen) and an internal positive pressure gauge (to monitor the pressure inside the glove box), and a ½ Amp fuse (inside the housing). It also includes a built-in pressure alarm and an open chamber alarm, which provide audible and visible alarms when line pressure falls below a preset point or the chamber is open at some point, such as an air lock left open. An alarm silencer is included to mute the audible alarm if desired.

A Typical application Featuring the Series 300 Atmospheric Chamber with 4 Glove Ports and various opions

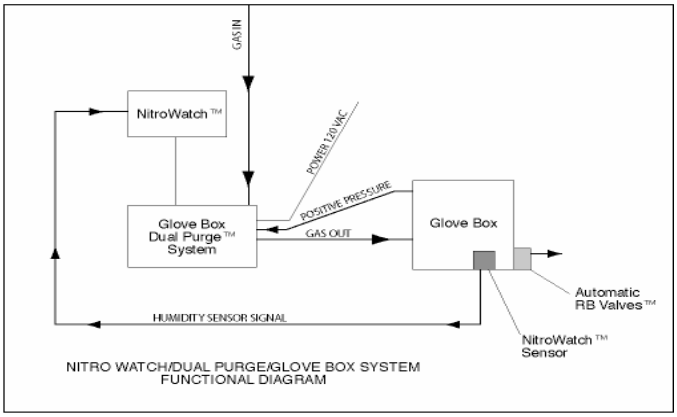

NITRO WATCH/DUAL PURGE/GLOVE BOX SYSTEM FUNCTIONAL DIAGRAM

Nitrowatch

Add the NitroWatch to the system for completely automated humidity control. It provides a continuous readout of the internal humidity level and operates together with the Dual Purge System to automatically maintain any sub-ambient internal humidity level (down to 0% RH) you may require.

The Humidity Sensor, which senses the humidity level, is mounted inside the controlled environment. It employs a fast-response capacitive probe whose capacitance is proportional to the humidity level. The sensor is capable of measuring humidity over the entire humidity range, from 0 to 100% RH, with an accuracy of ± 3 % RH at a temperature of 68 degrees F. The voltage output of the sensor is directly proportional to the humidity.

Artisan Technology Group - Quality Instrumentation ... Guaranteed | (888) 88-SOURCE | www.artisantg.com

© Copyright 2010 Terra Universal Inc. All rights reserved. • Revised Sept. 2010 • Document No. 1800-13 v2.0tm

A 3-prong connector allows easy connection of the sensor to the Control Unit. The Control Unit provides the indicators and controls necessary to set the desired humidity level and to measure the actual humidity level inside the chamber.

The rear panel of the NitroWatch features a 3-prong outlet for connection to the R/H sensor, and a telephone-jack outlet for connection to the Dual purge System (the desiccator sensor switch port is not used in glove box applications). It draws power from the Dual Purge System and requires no separate power connection.

The Humidity Sensor senses the relative humidity level inside the chamber; the output The front panel of these glove boxes features 8" flanged arm ports that allow easy connection of Terra's Changeable Sleeve and Glove Combination, which feature flexible accordion sleeves and gloves made of natural latex for easy manipulation of objects inside the chamber. The convoluted sleeve sections promote air circulation around an operator's arm, resist collapsing due to pressure inside the chamber, and prevent blowback when a hand is removed.

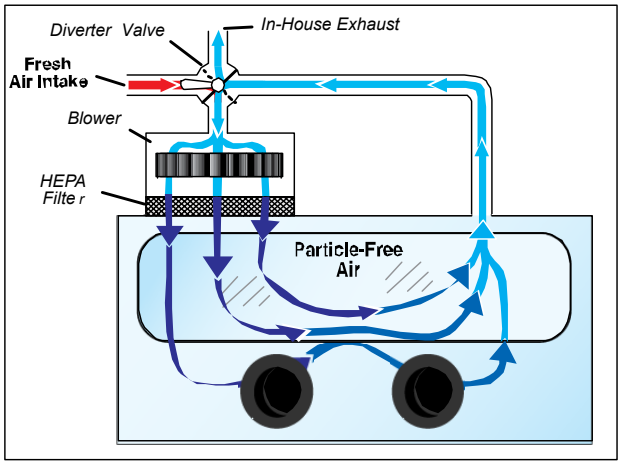

Close – Loop Filtration Module for continuous recirculation

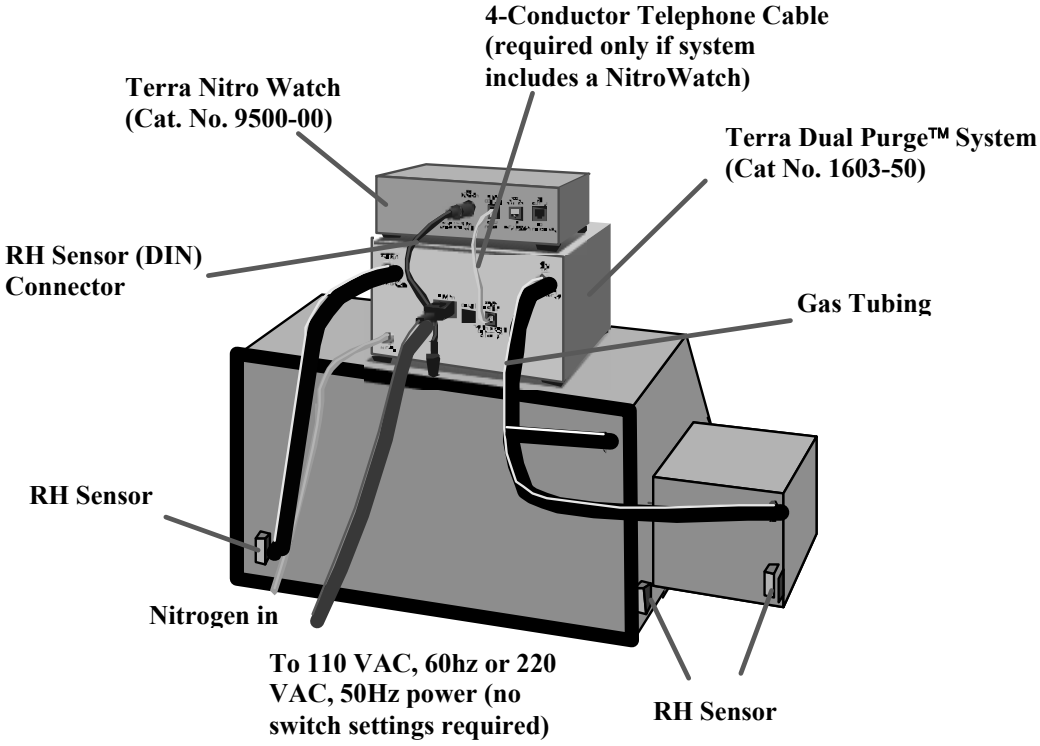

Artisan Technology Group - Quality Instrumentation ... Guaranteed | (888) 88-SOURCE | www.artisantg.com

© Copyright 2010 Terra Universal Inc. All rights reserved. • Revised Sept. 2010 • Document No. 1800-13 v2.0tm

Changeable Sleeve and Glove Combination

These accordion sleeves fit into the ports of Terra's glove boxes and atmospheric chambers for safe, easy handling of materials. They can be used with a variety of gloves, allowing you to change glove size or type without changing the sleeve itself. Supplied with one pair of tempered latex industrial gloves (select desired size). Clamps included.

Hinged Removable Glove Port Covers

This optional feature allows you to seal the system and then remove gloves for cleaning or change-out—while maintaining the integrity of the internal glove box environment. The hinged port covers lie flat on the glove box floor when not in use. To order this option, simply add "-30" to the catalog number of the affected glove box.

Air Locks
Terra's new, improved air lock design ensures a leak-proof environment that minimizes nitrogen loss and contamination inflow while parts are transferred into and out of the atmospheric chamber."Knife" edges along the doors seat against air-tight polyurethane gaskets. Double-wall stainless steel construction, with heavy-duty door latches and hinges, ensures a long service life.

All air locks are pre-mounted to a side flange that is easy to install on the Stainless Steel Atmospheric Chambers. This design also allows older model chambers to be easily retrofitted signal is then compared to the set point level.

Whenever the internal humidity exceeds the value of this set point by more than 0.5% RH, the controller signals the Dual Purge System to initiate a high-flow nitrogen purge, which forces moisture-laden air out of the Automatic RB (Relief/Bleed) Valve.

When the relative humidity falls to the proper level (within 0.5% of the set point), the high-flow purge is automatically shut down.

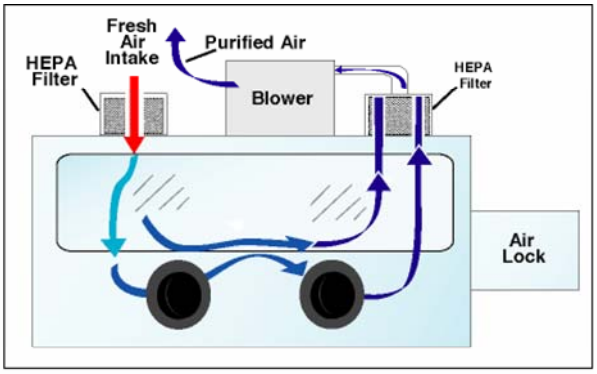

Open - Loop filtration Module for Safe Indoor Exhausting

The NitroWatch thus ensures the optimal environment for stored materials and at the same time eliminates nitrogen waste. Keep in mind, however, that the lower your humidity level set point, the more nitrogen the system will consume (and the greater the internal positive pressure will be).

Filtration/Recirculation Module
By selecting one of the filtration modules describe below, you can convert the Stainless Steel Glove Box into a recirculation/filtration chamber. These chambers include a versatile ventilation/exhaust system that provides continuous recirculation and filtration of the process gas. A diverter valve allows you to establish whatever ratio you wish of filtered gas to fresh gas, thereby meeting requirements for Type II biological enclosures. A variety of filters meet specific particle and biological requirements.

Closed-Loop Filtration Module

The Closed-Loop Filtration Module provides continuous recirculation to remove particulates, aerosols, spores, and other contaminants to ensure a clean process environment. This configuration includes a 460-CFM impeller blower, mounted in an acrylic housing, that draws air into the glove box through an inlet HEPA filter (rated 99.99% efficient at 0.3 micron particles).A 4-position PVC diverter valve lets you determine the percentage of fresh make-up air entering the chamber, either 100% (no recirculation); 0% (complete recirculation); or 50% (half fresh, half re-circulated).

Artisan Technology Group - Quality Instrumentation ... Guaranteed | (888) 88-SOURCE | www.artisantg.com

© Copyright 2010 Terra Universal Inc. All rights reserved. • Revised Sept. 2010 • Document No. 1800-13 v2.0tm

Open-Loop Filtration Module

The Open-Loop Filtration Module provides safe indoor exhausting, removing particulates, aerosols, spores, and other contaminants to ensure a clean process environment. This configuration includes a 460-CFM impeller blower, mounted in an acrylic housing, that forces air into the glove box through an inlet HEPA filter (rated 99.99% efficient at 0.3 micron particles). A HEPA exhaust filter removes contaminants from the out-flowing air to ensure that air exiting the system is safe for indoor release. Both filters are enclosed in a disposable acrylic housing to ensure safe handling and disposal at replacement time.

Ionizing Equipment

An optional ionizing bar and power supply can be used with the Series 100 Glove Box to neutralize the static charges in the work area.

3.0 Installation (see Appendix for instructions on attaching gloves)

Before installation and operation, carefully unpack the glove box and accessories and check for signs of damage or missing parts (report any damage immediately to the shipping company). Wipe down with a particle-free cloth. Although your glove box may differ somewhat from the system shown in the illustration below, all standard Terra glove boxes are shipped with ports for connection to gas control equipment and the Automatic Relief/Bleed (RB) Valve. Generally, components are connected and tested before shipping.

CAUTION: Many Terra Glove Boxes feature static-dissipative PVC viewing windows

- **Never use alcohol or other cleaning agent on acrylic surfaces.**
- **Do not expose glove boxes made of static-dissipative PVC to extreme heat or direct sunlight.**

Bench-Top Installation

Whether you select a Terra Universal stand or use one of your own, the atmospheric chamber requires 1/2 inch of clearance at either end to allow for the side flanges. Terra stands are designed slightly narrower than the chamber to allow this clearance; other stands or bench-tops may require an additional support to raise the chamber to the appropriate height.
Make sure that your glove box is placed on a level, stable surface, away from heat or chemicals that could damage it.

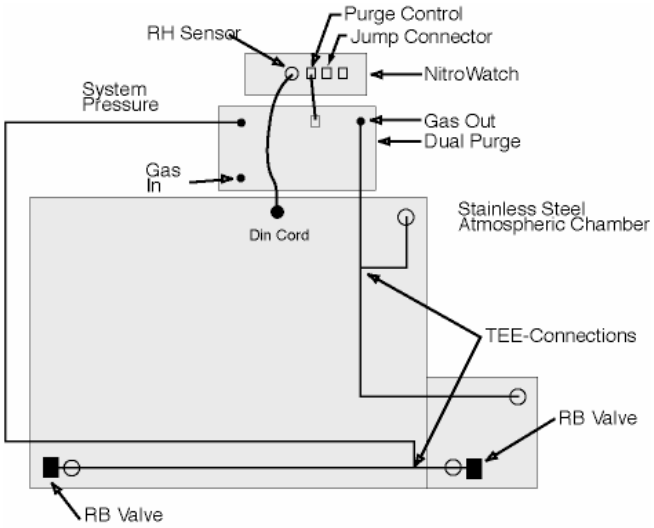

GLOVE BOX DUAL PURGE SYSTEM/NITRO WATCH CONNECTIONS

Removing/Installing the Side Panel
You may have to remove the side panel of the atmospheric chamber if you need to introduce a large piece of equipment into the work area or if you decide to retrofit an air lock or oven. You can also join several atmospheric chambers in series simply by removing the appropriate side pieces and joining the chambers.

Both side panels are held in place by a clamp that joins the flange of the chamber to that of the side piece (which, in turn, may be mounted to an oven or air lock, depending on your application).

Artisan Technology Group - Quality Instrumentation ... Guaranteed | (888) 88-SOURCE | www.artisantg.com

© Copyright 2010 Terra Universal Inc. All rights reserved. • Revised Sept. 2010 • Document No. 1800-13 v2.0tm

To remove a side panel, loosen the two bolts that hold the U-channel clamp in place; then remove the two halves of the clamp and slide the side panel off. If the panel is mounted to an oven or air lock, make sure that help is at hand to support this unit while it is removed.

Installing the Side Panels

You will need one person to support the oven or air lock (if your application features one of these units) and two people to align the clamp onto the flange. It is preferable to use new gaskets to ensure a tight seal.

Place the panel against the flange of the chamber and align the clamp over the flange. Tighten the two bolts to create a seal.

NOTE: If you are using TUI's High-Performance Pass-Through Vacuum/Nitrogen Oven, it will require its own support. Select a stand that has oven support.

The atmospheric chamber is equipped with a gas inlet (located in the upper right corner of the back panel) and a gas outlet (located in the lower left corner of the back panel). Both of these 3/4" NPT pipe-tapped openings feature a reducing insert that permits easy connections of standard gas fittings. You can remove this insert to allow installation of larger fittings.

Gas Inlet

Depending on your application, you can select either a Multi-Channel Gas Distributor or a Glove Box Dual Purge System™ to control the inflow of purge gas.

If your system incorporates an oven and/or air lock unit, you will need to control gas flow and pressure to several enclosures. In this case, you have two options:

1. A Multi-Channel Gas Distributor, which incorporates a pressure regulator and flowmeters.
2. A Glove Box Dual Purge System™.

You can connect either the Glove Box Dual Purge System™ or the Multi- Channel Gas Distributor directly to the NPT opening in back of the atmospheric chamber. If your application calls for a Glove Box Dual Purge System™, you will need to use a "T" fitting to create an additional port for the cabinet pressure sensor.

Gas Release

The Automatic RB (Relief/Bleed) Valve is required in any application that includes a Glove Box Dual Purge System™. Unlike standard oil-based bleed valves, this valve allows the system to maintain a safe, contamination-free environment at a very low internal positive pressure (often as low as 0.05" WC).Low pressure operation saves on gas consumption, greatly extends the life of seals, and eliminates dangerous overpressures that could lead to an explosion.

DO NOT OPERATE THE SYSTEM AT AN INTERNAL PRESSURE GREATER THAN 0.3" WC (water column), or damage to the seals and viewing window could result.

1. Using 1/4-inch plastic tubing, connect the Dual Purge "GAS OUT" to a Tee connector by loosening the Poly-Tite collar, inserting the tubing, and tightening the collar. Connect one end of the Tee to the air lock gas input (upper right of air lock unit, facing the rear) and the other end of the Tee to the Glove Box "GAS IN" at the upper right of the chamber, facing the rear. If you are not using an air lock unit this Tee will not be necessary—just connect the Dual Purge "GAS OUT" to the chamber "GAS IN."

Artisan Technology Group - Quality Instrumentation ... Guaranteed | (888) 88-SOURCE | www.artisantg.com

© Copyright 2010 Terra Universal Inc. All rights reserved. • Revised Sept. 2010 • Document No. 1800-13 v2.0tm

2. Using 1/4-inch plastic tubing, connect the "INTERNAL PRESSURE" output from the Dual Purge unit to a Tee connector. Connect one end of the Tee connector to the RB Valve on the rear of the chamber. Connect the other end of the Tee to the RB Valve on the air lock.
3. Connect your in-house gas supply to the fitting marked "To GAS SUPPLY" on the Dual Purge unit.
4. Connect the "Purge Control" ports of Dual Purge and NitroWatch systems with a 4- conductor sensor wire (terminated with easy-snap telephone jacks). If your application has no NitroWatch, leave this port open.
5. Plug the power cord to a grounded receptacle. The Dual Purge operates on 110VAC, 60Hz or 220VAC, 50/60Hz. No power switch settings are required.

CAUTION: **Whichever gas control accessories your application includes, make sure that the glove box and air lock(s) are equipped with Automatic RB Valves to ensure safe pressure release.**

For a Glove Box with a Flowmeter only:

Make sure that the flowmeter is securely installed near the top of the cabinet. Flowmeters are generally mounted before shipping. To install a flowmeter yourself, use Terra's fitting kit no. 1600-56, which includes a brass male connector (positioned at the flowmeter inlet for connection to the incoming gas line) and a hex nipple (which secures the flowmeter to the glove box wall).

Set the flowmeter between 5 - 20 SCFH (depending on glove box size and purge requirements).

For a Glove Box with Dual Purge System:

1. Make the electrical and gas connections indicated in the illustration.

2. Zero Calibration: Press and hold SET and UP buttons while power is turned ON.
   This activates a pressure sensor zero calibration routine before the setup mode is started. The display will indicate "CAL" before this calibration is performed. The zero value is set automatically and is not changeable via the pushbuttons.

   Remember to disconnect all air pressure from both pressure transducers before performing a zero calibration. Any pressure on the transducers while this routine is run will be subtracted from the readings during normal operation, resulting in likely continuous low-pressure alarms.

3. Initial Programming: Turn ON the Dual Purge System while depressing SET (the left button on the front control panel). Each time you release and then press and hold the SET button, you will advance through the following control functions. Use UP/DOWN to change default settings (shown in parentheses):

Prg1 Purge Delay (minutes): No. of minutes that the high purge remains active after the internal pressure level is restored (default: 0).

Prg2 Purge Delay (seconds): No. of seconds that the high purge remains active after the internal pressure level is restored (default: 60).

Door No. of seconds a door must remain open to activate OPEN DOOR alarm (defaults: 60). Inactive in Glove Box applications.

Beep State of the BEEPER enable (default: ON)

Glo Activates GLOVE BOX control mode – press UP to turn ON and proceed to glove box pressure setting; DOWN to turn OFF (default: ON).

Artisan Technology Group - Quality Instrumentation ... Guaranteed | (888) 88-SOURCE | www.artisantg.com

© Copyright 2010 Terra Universal Inc. All rights reserved. • Revised Sept. 2010 • Document No. 1800-13 v2.0tm

Press In GLOVE BOX mode, this setting lets you adjust the pressure (milli-inches WG) at which the high purge is activated (default: 20 which corresponds to 0.2 milli-inches WG). Note: complete the "Zero Calibration" procedure above (Step 6) before completing this adjustment.

Done Settings are complete; press SET once more to begin operation.

Make a mistake? No Problem!

To reset the system, turn the system OFF while in setup mode and restart while holding the SET button.

4. Once programming is complete, turn the pressure regulator (he round knob on the right side of the Dual Purge control panel) until the pressure gauge reads between 30 and 40 psi (use more pressure for larger glove boxes with 4 arm ports).

WARNING: For safe operation the incoming gas line pressure must be regulated below 70psi.

5. The Dual Purge System includes a flowmeter, which provides a continuous low-level purge to maintain a constant positive pressure inside the cabinet. The flowmeter also ensures an uninterrupted nitrogen flow if power or system electronics ever fail.

If continuous purging is desired, set the flowmeter so that the pressure gauge reads at least 0.1" WG when the system is in low purge state. This setting is recommended if you require a very low humidity set point (less than 10%RH) or if the air lock doors will be opened frequently. Continuous purging will tend to drive the humidity level very low.

If continuous purging is not required, close the flowmeter. The Dual Purge System will initiate a purge only when an air lock door is opened, or when humidity level climbs above the set point (if your system includes a NitroWatch).

6. **Operation Display Functions:**

After completing initial programming, press the specified button to view these operating conditions:

High Purge Bypass - Press and hold SET

In some applications (especially using fine powders in a glove box), you may wish to deactivate the high purge function, which could create turbulence. Press DOWN while holding SET. To activate high purge, hold UP while holding SET.

Incoming Line Pressure - Press & hold UP (displays in PSI)

Internal Pressure - Press and hold DOWN (displays in milli-inches of WG)

Purge Timer - Press and hold UP and DOWN simultaneously to review the number of seconds the high-flow purge is active after a door is closed. To change this value, see "Programming," above**.**

System Set-Up Dual Purge System and NitroWatch®

Includes: Dual Purge System as described above, NitroWatch control unit, humidity sensor, and two 5' connecting lines (for connecting the control unit to the humidity sensor and to the Dual Purge System). Refer to illustration.

Artisan Technology Group - Quality Instrumentation ... Guaranteed | (888) 88-SOURCE | www.artisantg.com

© Copyright 2010 Terra Universal Inc. All rights reserved. • Revised Sept. 2010 • Document No. 1800-13 v2.0tm

1. Carefully unpack the unit and check for any visible damage or missing parts.

2. Complete the Dual Purge System connections as described above. Note: The PURGE CONTROL connection allows the NitroWatch to draw power from and to control the Dual Purge System.

3. Connect the humidity sensor to the controller by plugging in the round DIN connector to the R/H SENSOR port on the rear panel.

4. Leave the DOOR SWITCH port on the NitroWatch open. This connection is used only in desiccator applications.

5. Turn the Dual Purge System ON by placing the power switch in the "up" position. The NitroWatch LED display should indicate some humidity level.

NOTE: Allow about 5 minutes for the system to warm up after turning power "ON."

6. Initial NitroWatch Programming: After connecting the NitroWatch to the Dual Purge System, turn ON the Dual Purge System while holding down the NitroWatch SET button (the left button on the front control panel).

Each time you release and then press and hold the SET button, you will advance through the following control functions. Use the UP/DOWN buttons to change default settings (shown in parentheses):

Door Open Door Delay Alarm: No. of seconds a door must remain open to activate OPEN DOOR alarm (default: 60). This setting is inactive in Glove Box applications.

RH Relative Humidity High Purge Delay Alarm: No. of seconds the RH level must remain above the set point to activate the alarm (default: 60).

Beep Enables/Disables Beeper Alarm (default: ON)

HU HUMEX operation selector – when in the OFF mode, the system operates as a NitroWatch (maintaining below-ambient humidity). In the ON mode, the system functions as a Humex2 (maintaining above-ambient humidity). Default: OFF.

Add ADJUST parameter: Use this function to compensate for measured discrepancies between the NitroWatch %RH readout and that of an independent %RH calibrator. Press the UP/DOWN keys to adjust the scale up or down.
Note: this adjustable offset value will wrap around if the maximum or minimum is exceeded. For example, if you try to set the adjust value above the maximum scale offset of 49.5, the value will wrap around to –50. Also, a side effect of using an offset value other than zero is that the R/H range will be reduced. For example, if the offset value is –10, then the maxi um R/H value that can occur is 90 because the input value (100) will be added to the adjust value before the system uses it.

Air ALARM time selector, which allows you to specify the alarm scale determined above ("Door") in either minutes – LONG –or seconds – Shrt.

Make a mistake? No Problem! To reset the system, cut power to the NitroWatch by turning the Dual Purge System OFF while in setup mode and restart while holding the SET button.

7. Adjust Humidity Set Point: After completing initial programming, press the SET button to view the current % RH set point. Use the UP/DOWN keys to change this set point.

8. Beeper Silencing: Press any front panel button to silence the beeper during an alarm condition.

Artisan Technology Group - Quality Instrumentation ... Guaranteed | (888) 88-SOURCE | www.artisantg.com

© Copyright 2010 Terra Universal Inc. All rights reserved. • Revised Sept. 2010 • Document No. 1800-13 v2.0tm

The NitroWatch will now activate high-flow purging whenever the %RH level inside the glove box exceeds the specified set point. Your system is ready for operation.

The NitroWatch may be placed on any surface near the sealed enclosure. A suggested location is on top of the chamber.

System Set-Up with Filtration Module
Terra glove boxes with filtration modules are shipped ready for installation. Simply connect the equipment to an appropriate power source.

4.0 Operation

Operating the Dual Purge System
Operation Display Functions**:** After completing initial programming outlined above, press the specified button to view these operating conditions:

High Purge Bypass - Press and hold SET
In some applications (especially using fine powders in a glove box), you may wish to deactivate the high purge function, which could create turbulence. To do so, press DOWN while holding SET. To activate high purge, hold UP while holding SET.

Incoming Line Pressure - Press and hold UP — displays line pressure in PSI.
Turn the pressure regulator (the round knob on the right side of the Dual Purge control panel) until the pressure gauge reads 30 psi (for small enclosures) or 40 psi (for larger enclosures).

Internal Pressure - Press and hold DOWN — displays internal cabinet pressure in milli-inches of Water Gauge (WG).

The Dual Purge System includes a flowmeter, which provides a continuous low-level purge to maintain a constant positive pressure inside the cabinet. The flowmeter also ensures an uninterrupted nitrogen flow if power or system electronics ever fail.

If continuous purging is desired, set the flowmeter so that the pressure gauge reads at least 0.1" WG when the system is in low purge state. This setting is recommended if you require a very low humidity set point (less than 10%RH) or if access doors will be opened frequently. Continuous purging will tend to drive the humidity level very low.

If continuous purging is not required, close the flowmeter. The Dual Purge System will initiate a purge only when an access door is opened, or when humidity level climbs above the set point (if your system includes a NitroWatch).

CAUTION:

- **Remember that the system is not designed for internal pressure greater than .3" WC.**
- **Terra Atmospheric chambers are not designed to operate with a negative internal pressure. Never attempt to operate these systems under a vacuum, or damage to the chamber could result**

Purge Timer
Press and hold UP and DOWN simultaneously to review the number of seconds the high-flow purge is active after internal pressure is restored. To change this value, see “Initial Programming” above.

Artisan Technology Group - Quality Instrumentation ... Guaranteed | (888) 88-SOURCE | www.artisantg.com

© Copyright 2010 Terra Universal Inc. All rights reserved. • Revised Sept. 2010 • Document No. 1800-13 v2.0tm

CAUTION: Because the high-level purge fed into the system can lead to excessive internal pressure, you must equip a glove box with at least two Automatic RB Valves when you install a Dual Purge System.

Operating a Glove Box with the Dual Purge System and NitroWatch®

1. Adjust Humidity Set Point: After completing initial programming outlined above, press the SET button to view the current % RH set point. Use the UP/DOWN keys to change this set point

2. Beeper Silencing: Press any front panel button to silence the beeper during an alarm condition.

The NitroWatch will now activate high-flow purging whenever the %RH level inside the glove box exceeds the specified set point. Your system is ready for operation.

CAUTION: Because the high-level purge fed into the system can lead to excessive internal pressure, you must equip a glove box with a stainless steel Automatic RB Valve when you install a Dual Purge System.

NOTE: If the Dual Purge System remains at high-level purge, or if it frequently fluctuates between high and low-level purge, you need to increase your flowmeter setting. Increase the flowmeter setting until the humidity level falls a few percent below your set point. At this flowmeter setting, the system will be able to maintain the desired humidity while on the low-level purge—and save nitrogen

As you increase the flow, the internal positive pressure will also increase. You may safely increase this pressure as high as .3" WC as long as the chamber incorporates Automatic RB Valves, which automatically protect against the possibility of warping or rupturing.

Because the humidity sensor is exposed to moisture during shipping, the system must generally operate for a couple of days in a dry nitrogen environment before the sensor dries out and delivers completely accurate readings.

Applications with Large Materials

Generally, materials can be passed into the work area by means of the access doors, which are opened from inside the chamber. In some applications, however, you may need to remove the side panels in order to get large objects inside the chamber.

In this case, remove the two bolts that attach the panel to the chamber. Then remove the U-channel clamp and the side panel can be detached. When reinstalling, it's preferable to use new gasketing material to be certain of a good seal. Refer to the Maintenance Section for details on how to remove the gaskets thoroughly.

Applications with the Glove Box Filtration Module

The Glove Box Filtration Module System is shipped ready for installation. Simply connect the equipment to an appropriate power source.

Artisan Technology Group - Quality Instrumentation ... Guaranteed | (888) 88-SOURCE | www.artisantg.com

© Copyright 2010 Terra Universal Inc. All rights reserved. • Revised Sept. 2010 • Document No. 1800-13 v2.0tm

5.0 Maintenance

Terra's Glove Boxes require minimal maintenance. All materials are easy to clean with water or mild detergent and a dry, clean wipe. You should take care, however, not to damage heat-sensitive static-dissipative PVC, or to clean with harsh agents that could damage the dissipative surface

CAUTION:

1. **Do not clean acrylic products with alcohol or other strong cleaning agents.**

2. **Do not expose static-dissipative PVC to extreme heat or direct sunlight.**

Replacing Filters

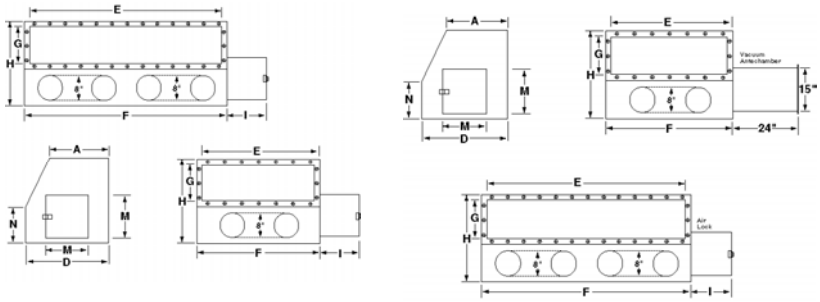

Filters need to be replaced when they become clogged. A significant reduction in airflow velocity or a noisy motor may indicate a filter change is required. The velocity of the outflow may be measured using an air velocity meter. If the air speed falls below acceptable limits required for your application, a filter change is required.

Glove parts	A	D	E	F	G	H	I	M	N
2	27	33	28/14	33	1213/16	33	16	12	11
4	27	33	561/2	60	1213/16	33	16	12	11

To replace the filter for Closed-Loop Filtration Module:

1. Remove screws that secure filter housing in place.

2. Remove the housing and the used filter.

3. Insert replacement HEPA filter (Catalog No. 2100-30) and replace housing. Secure housing with screws.

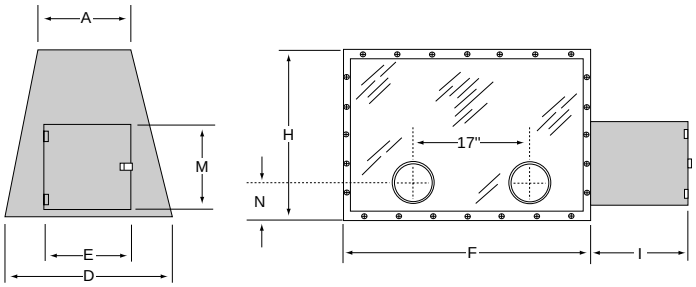

To replace filters for Open-Loop Filtration Module:

1. Remove screws that secure the plexiglass filter housing.

2. Discard the disposable housing (with enclosed filter).

Glove	A	D	E	F	G	H	I	M	N
2	26	36	12	48	17	30	16	141/12	10
4	26	36	12	96	17	30	16	141/2	10

3. Replace with Replacement Filter Module (HEPA filter in acrylic housing, Catalog No. 1684-84), and secure housing with screws.

Artisan Technology Group - Quality Instrumentation ... Guaranteed | (888) 88-SOURCE | www.artisantg.com

© Copyright 2010 Terra Universal Inc. All rights reserved. • Revised Sept. 2010 • Document No. 1800-13 v2.0tm

Series 300 Atmospheric Chamber with no Air Lock Unit

Model	Glove Parts	A	D	E	F	G	H	I	M	N
Single	2	161/2	2313/16	2711/16	341/8	123/8	2313/16	16	141/2	10
Twin	4	161/2	2313/16	541/4	581/2	123/8	2313/16	16	141/2	10

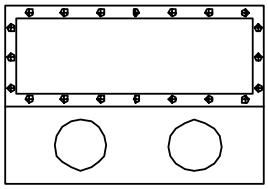

Series 300 Atmospheric Chamber with right hand Air Lock Unit

Model	Glove Parts	A	D	E	F	G	H	I	M	N
Single	2	161/2	2313/16	2711/16	341/8	123/8	2313/16	16	141/2	10
Twin	4	161/2	2313/16	541/4	581/2	123/8	2313/16	16	141/2	10

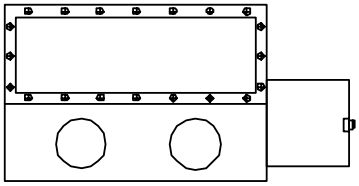

Series 300 Atmospheric Chamber with left hand Air Lock Unit

Model	Glove Parts	A	D	E	F	G	H	I	M	N
Single	2	161/2	2313/16	2711/16	341/8	123/8	2313/16	16	141/2	10
Twin	4	161/2	2313/16	541/4	581/2	123/8	2313/16	16	141/2	10

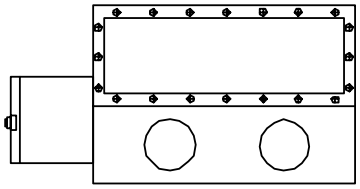

Series 300 Atmospheric Chamber with two Air Lock Units

Model	Glove Parts	A	D	E	F	G	H	I	M	N
Single	2	161/2	2313/16	2711/16	341/8	123/8	2313/16	16	141/2	10
Twin	4	161/2	2313/16	541/4	581/2	123/8	2313/16	16	141/2	10

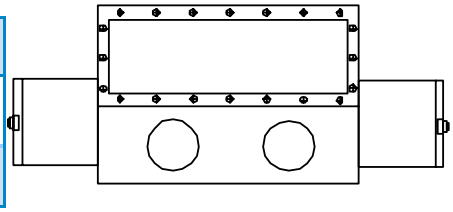

Testing and Replacing Humidity Sensor

The NitroWatch humidity sensor requires no calibration. If a discrepancy is observed between the displayed %RH and that of an independent humidity calibrator, the humidity scale can be shifted accordingly (see NitroWatch Set-Up guidelines above). The sensor should be tested periodically and replaced as necessary (about every 5 years under normal use).

6.0 Troubleshooting

Terra Universal's Glove Boxes and Nitrogen Controls are designed to provide years of reliable, efficient service. If you should experience any problems that arise during operation of your system, refer o the appropriate troubleshooting procedure below. If the problem persists, or if you encounter any problems not described below, call Terra Universal for additional assistance.

Artisan Technology Group - Quality Instrumentation ... Guaranteed | (888) 88-SOURCE | www.artisantg.com

© Copyright 2010 Terra Universal Inc. All rights reserved. • Revised Sept. 2010 • Document No. 1800-13 v2.0tm

PROBLEM: System won't turn on.

POSSIBLE SOLUTIONS:

1. Make sure that the power cord of the Dual Purge System is plugged into an appropriate outlet and that the telephone cable to the NitroWatch is properly connected.

2. Make sure that the power switch of the Dual Purge System is in the ON position.

3. Check the fuse of the Dual Purge System. The ½ amp fuse, mounted on the circuit board controller, is accessible once the stainless steel housing cover is removed.

PROBLEM: The system stays in high purge at all times.

POSSIBLE SOLUTIONS:

1. Make sure that you have programmed the Dual Purge for Glove Box Service, and tat the internal pressure setting is between 0.1 and 0.7 inches water gauge.

2. If your system incorporates a NitroWatch and you require a very low humidity level, you may need to increase the flowmeter setting on the Dual Purge System to provide more than 0.1" WC internal pressure.

3. Check door seals of the air lock to make sure that there are no leaks.

4. If you are operating a large glove box and require a low humidity level, your system may need to operate on high purge much of the time to compensate for the hygroscopic characteristics of the plexiglass (or static-disspative PVC) chamber walls. These materials absorb moisture from outside of the wall and pass it inside. The higher the difference between the external and internal humidity levels, the more nitrogen you will need in order to remove this moisture. Turn up the flowmeter setting until the Dual Purge maintains the desired humidity level on the low purge.

PROBLEM: The system constantly switches between high and low purge.

PROBLEM SOLUTIONS:

1. Make sure that all access doors are closed. Check door seals for leaks.

2. The flowmeter is set too low. Increase the flow and make sure you maintain at least 0.1" WC or more internal pressure. This is especially important if your system incorporates a NitroWatch and you have established a low humidity set point. You should increase the flowmeter setting until the Dual Purge System maintains a humidity level a few percent below the set point without switching to the high-level purge.

PROBLEM: The glove box is leaking.

PROBLEM SOLUTONS:

1. Make sure that all access doors are closed. Check door seals for leaks.

2. The flowmeter is set too low. Increase the flow and make sure you maintain at least 0.1" WC or more internal pressure. This is especially important if your system incorporates a NitroWatch and you have established a low

Artisan Technology Group - Quality Instrumentation ... Guaranteed | (888) 88-SOURCE | www.artisantg.com

© Copyright 2010 Terra Universal Inc. All rights reserved. • Revised Sept. 2010 • Document No. 1800-13 v2.0tm

humidity set point. You should increase the flowmeter setting until the Dual Purge System maintains a humidity level a few percent below the set point without switching to the high-level purge.

PROBLEM: Line pressure gauge does not display any pressure.

PROBLEM SOLUTIONS:

1. Supply gas is down, or for some reason is not reading the Dual Purge System. Check our supply line for kinks or blockage.

2. If your gas system utilizes a filter, it may be clogged and need to be replaced.

3. Check the line pressure regulator to make sure it is not closed.

PROBLEM: The internal positive pressure gauge does not indicate a positive pressure.

POSSIBLE SOLUTIONS:

1. System may not be properly set up. Follow the operating procedures outlined on the previous page.

2. Check the doors for a possible leak.

PROBLEM: The NitroWatch delivers an obviously incorrect humidity reading.

POSSIBLE SOLUTIONS:

Check the NitroWatch sensor connection on the rear panel of the control module. If the connection to the sensor is good, and the unit still fails to deliver an accurate reading

Appendix: Glove and Sleeve Combination Installation

The Universal's Glove and Sleeve Combination allows versatile access to equipment inside a stainless steel or plastic glove box. This assembly is designed for use with standard 8" – diameter TUI glove ports, which include a flange to allow glove connection.

Mounting the Glove and Sleeve Assembly to the Glove Box

Normally, the glove and sleeve combination is installed in the glove box prior to shipping. If for any reason you need to reinstall the assembly, follow these instructions:

1. Insert the glove and sleeve assembly into the glove box, allowing 2" of sleeve to extend beyond the front edge of the mounting flange.

2. Fold the outside edge of the sleeve over the flange, so that roughly 2" of the sleeve cuff is stretched along the outside perimeter of the flange.

3. The Sleeve is held in place by a stainless steel clamp (TUI Cat. No. 1689-40). Position this clamp along the mounting flange so that about 1" of excess sleeve cuff protrudes on the inside edge of the flange (the edge closet to the front wall of the glove box). Carefully tighten the clamp just enough to hold the sleeve in place.

Artisan Technology Group - Quality Instrumentation ... Guaranteed | (888) 88-SOURCE | www.artisantg.com

© Copyright 2010 Terra Universal Inc. All rights reserved. • Revised Sept. 2010 • Document No. 1800-13 v2.0tm

CAUTION: **Overtightening the clamp could crack or warp the flange and damage the glove box.**

4. Fold back the excess sleeve cuff toward the front edge of the flange to cover the clamp. Repeat procedure for the other glove and sleeve combination.

Mounting the Glove to the Sleeve

The two-piece design of this assembly permits you to replace the glove without removing the sleeve from the glove box. To replace the glove,

1. With the glove and sleeve combination installed inside the glove box, insert our hand fully into the assembly and then pull it from the glove box to turn the glove and sleeve inside out.

2. A steel retaining spring holds the glove and sleeve together in position on a retaining ring. Remove this spring.

3. Peel the cuff of the sleeves from the retaining ring to remove it (still attached to the glove).

4. To remove the glove, peel its cuff from retaining ring.

5. To install a new glove, first turn it inside-out and then stretch the cuff from inside the ring over and around the outside edge.

7.0 Specifications

Series 300 Stainless Steel Glove Boxes

Door Openings:	12.5" x 12.5" with gasketed doors that open inward.
Arm Ports:	8" round with flange for connecting glove assembly
Gas Ports:	Tapped 3/4" NPT inlet (for connecting flowmeter or Dual Purge™ System) and 3/4" NPT system Pressure port; 3/4" NPT outlet (for connecting Terra Automatic RB Valve). Appropriate adapter inserts are supplied for any Terra gas systems ordered.

Series 400 Stainless Steel Controlled Atmosphere Chamber

Door Openings:	12" x 12" gasketed doors that open inward.
Arm Ports:	8" round with flange for connecting glove assembly
Gas Ports:	Tapped 3/4" NPT inlet (for connecting flowmeter or Dual Purge™ System) and 3/4" NPT system pressure port; 3/4" NPT outlet (for connecting Terra Automatic RB™ Valve). Appropriate adapter inserts are supplied for any Terra gas systems ordered.

Series 500 Full-View Chamber

Door Openings:	12" x 12" gasketed doors that open inward.
Arm Ports:	8" round with flange for connecting glove assembly
Gas Ports:	Must be custom-specified for use with the Glove Box Dual Purge System.

Dual Purge System

Overall Dimensions:	12"W x 11.25"D x 7"H
Weight:	16 lbs

Artisan Technology Group - Quality Instrumentation ... Guaranteed | (888) 88-SOURCE | www.artisantg.com

© Copyright 2010 Terra Universal Inc. All rights reserved. • Revised Sept. 2010 • Document No. 1800-13 v2.0tm

Power Requirement:	120/220 VAC, 50/60 Hz, +10%/-15% 1/2 Amp. Universal power supply requires no power witch settings.
Flowmeter:	0–20 SCFH
Line Pressure Gauge:	0–60 psi
Open Door Alarm:	Factory set at 60 seconds (adjustable)
Inlet/outlet:	1/4" OD polyethylene tubing
Case Material:	Stainless steel
Timer Adjustment:	Factory set at 60 seconds (adjustable)
Internal Positive Pressure:	0-0.5 inches of water
Fuse:	1/2 Amp
NitroWatch	
Dimensions:	11"W x 6.5"D x 3"H
Power:	12 V/DC (from Dual Purge)
Sensor Dimensions:	1.5" x 0.75" x 4"
Case Material:	Stainless steel
Display:	3.5 digit LED display
Electrical Connections:	Screw terminals
Output:	0-5 V
Measuring Range:	0-100% RH
Accuracy (at 20° C):	± 3% RH
Resolution:	± .1% RH
Temp. Dependence:	± .04% RH/°C
Sensor Calibration:	None required
Closed-Loop Filtration Module	
Blower:	740-CFM impeller
Filter:	HEPA filter (rated 99.99% efficient @ 0.3 micron particles)
	Open-Loop Filtration Module
Blower:	460-CFM squirrel-cage blower
Filters (inlet and exhaust):	HEPA filter (rated 99.99% efficient @ 0.3 µm particles)

Artisan Technology Group - Quality Instrumentation ... Guaranteed | (888) 88-SOURCE | www.artisantg.com

© Copyright 2010 Terra Universal Inc. All rights reserved. • Revised Sept. 2010 • Document No. 1800-13 v2.0tm

8.0 Warranty

Products Manufactured by Terra: Terra Universal, Inc., warrants products that it manufactures to be free from defects for a period of 12 months for parts and 90 days for labor, commencing from the date of shipment. Terra's sole responsibility is to repair or replace, at its option, any part of the product that proves defective or malfunctioning during this time limit. In some cases, components incorporated in Terra Universal products are covered by additional warranties from component manufacturers; obtain specific information from Terra sales representatives. This warranty is void if the equipment is abused or modified by the customer, is operated outside Terra's operating instructions or specifications, or is used in any application other than that for which it is specified. This warranty does not include routine maintenance or service procedures, breakage of quartz baths after 60 days, shipping damage, nor damage from misuse, intentional or unintentional abuse, neglect, natural disasters, or acts of God.

Products Manufactured by Others: Terra Universal, Inc., warrants that, to the best of its ability, Terra's representations of products that are manufactured by others reflect the manufacturer's representations, subject to change without notice. Sole warranty for these products is the original manufacturer's warranty that is passed forward to the purchaser and constitutes the customer's sole remedy for these products. Detailed warranties for distributed products are available through Terra sales representatives.

Freight Shortage or Damage: Upon receipt of any equipment from Terra Universal, Inc., customer shall immediately unpack and inspect for damage or shortage. The customer shall not accept a damaged package or a short shipment until the carrier makes a "damage or shortage" notation on both the carrier's and customer's copy of the freight bill or delivery receipt. Service title passes when the shipment is loaded, so customer is responsible for filing and collecting a freight claim. Any replacement products must be ordered and paid for separately. For Terra's "Policy and Procedures for Returning Goods," see Terra's Internet site: www.TerraUniversal.com.

Generally, customers can improve the chance of collecting on a freight claim by following these procedures: 1) formally requesting that the carrier inspect the shipment immediately upon suspecting damage or shortage to verify condition; 2) notifying the carrier upon discovery of concealed damage and requesting an inspection within 15 days of receipt, both in person or phone and following up via mail; 3) keeping the shipment as intact as possible, including retaining original packaging materials and keeping the product as close to the original receiving location as possible; 4) holding salvage for disposition by the carrier.

All Claims: Terra Universal expressly disclaims all other warranties, expressed or implied or implied by statute, including the warranties of merchantability or fitness for intended use. Terra Universal is not responsible for consequential or incidental damages arising out of the purchase or use of the products supplied by Terra Universal. Terra Universal is not liable for damage to facilities, other equipment, products, property or personnel of others, or of their agents, suppliers, or affiliated parties, which is caused or alleged to have been caused by products supplied by Terra Universal. In any event or series of events, Terra Universal's total liability for any and all damages whatsoever is limited to the lesser of the actual damages or the original invoice cost of the items alleged to have caused the damage. The customer's sole and exclusive remedy for any cause of action whatsoever is repair or replacement of the non-conforming products or refund of the actual purchase price, at the sole option of Terra Universal. All claims must be made in writing within 90 days of the date the product was shipped. Any claims not made within this time limit shall be deemed waived by the customer. Terra Universal is not responsible for any additional costs of repair caused by poor packaging or in-shipment damage during return.

Warranty Returns: All warranty returns must be authorized in advance by Terra Universal and approved under an RMA. Unless approved in advance for good reason, all returns must be in original condition, including all manuals, and must be packaged in original packaging materials. All returned goods are to be shipped to Terra Universal, freight prepaid at customer's expense. See Terra's "Policy and Procedure for Returned Goods.

Thank you for ordering from
Terra Universal!

Artisan Technology Group - Quality Instrumentation ... Guaranteed | (888) 88-SOURCE | www.artisantg.com

Artisan Technology Group is an independent supplier of quality pre-owned equipment

Gold-standard solutions

Extend the life of your critical industrial, commercial, and military systems with our superior service and support.

We buy equipment

Planning to upgrade your current equipment? Have surplus equipment taking up shelf space? We'll give it a new home.

Learn more!

Visit us at **artisantg.com** for more info on price quotes, drivers, technical specifications, manuals, and documentation.

Artisan Scientific Corporation dba Artisan Technology Group is not an affiliate, representative, or authorized distributor for any manufacturer listed herein.

We're here to make your life easier. How can we help you today?

(217) 352-9330 | sales@artisantg.com | artisantg.com

ARTISAN® TECHNOLOGY GROUP