Artisan Scientific
QUALITY INSTRUMENTATION ... GUARANTEED

Looking for more information?

Visit us on the web at **http://www.artisan-scientific.com** for more information:

- Price Quotations • Drivers • Technical Specifications, Manuals and Documentation

Artisan Scientific is Your Source for Quality New and Certified-Used/Pre-owned Equipment

- Tens of Thousands of In-Stock Items
- Hundreds of Manufacturers Supported
- Fast Shipping and Delivery
- Leasing / Monthly Rentals
- Equipment Demos
- Consignment

Service Center Repairs

Experienced Engineers and Technicians on staff in our State-of-the-art Full-Service In-House Service Center Facility

InstraView™ Remote Inspection

Remotely inspect equipment before purchasing with our Innovative InstraView™ website at **http://www.instraview.com**

We buy used equipment! We also offer credit for Buy-Backs and Trade-Ins

Sell your excess, underutilized, and idle used equipment. Contact one of our Customer Service Representatives today!

Talk to a live person: 888-88-SOURCE (888-887-6872) | Contact us by email: sales@artisan-scientific.com | Visit our website: http://www.artisan-scientific.com

Allen-Bradley

Bulletin 1203 Remote I/O Communications Module

User Manual

Cat. Nos. 1203-GD1, 1203-GK1, or 1336-GM1
Firmware 1.xx – 4.xx

Artisan Scientific - Quality Instrumentation ... Guaranteed | (888) 88-SOURCE | www.artisan-scientific.com

Important User Information

Because of the variety of uses for the products described in this publication, those responsible for the application and use of this control equipment must satisfy themselves that all necessary steps have been taken to assure that each application and use meets all performance and safety requirements, including any applicable laws, regulations, codes and standards.

The illustrations, charts, sample programs and layout examples shown in this guide are intended solely for purposes of example. Since there are many variables and requirements associated with any particular installation, Rockwell Automation does not assume responsibility or liability (to include intellectual property liability) for actual use based upon the examples shown in this publication.

Rockwell Automation publication SGI-1.1, *Safety Guidelines for the Application, Installation, and Maintenance of Solid-State Control* (available from your local Rockwell Automation office or online at www.ab.com/manuals/gi), describes some important differences between solid-state equipment and electromechanical devices that should be taken into consideration when applying products such as those described in this publication.

Reproduction of the contents of this copyrighted publication, in whole or in part, without written permission of Rockwell Automation, is prohibited.

Throughout this manual we use notes to make you aware of safety considerations:

ATTENTION: Identifies information about practices or circumstances that can lead to personal injury or death, property damage or economic loss.

Attention statements help you to:

- Identify a hazard.
- Avoid the hazard.
- Recognize the consequences.

Important: Identifies information that is critical for successful application and understanding of the product.

Artisan Scientific - Quality Instrumentation ... Guaranteed | (888) 88-SOURCE | www.artisan-scientific.com

The information below summarizes the changes made to this manual since the last release.

Updated Information

This manual incorporates the information found in the following two manuals:

- *Bulletin 1203 Remote I/O Communication Module Getting Started Manual*, Publication 1203-5.1.
- *Bulletin 1203 Remote I/O Communications Module Reference Manual*, Publication 1203-5.0.

It also contains new information.

Updates and Additions

The information below summarizes the changes to this manual since its last release:

Page	Description
2-5	Important statement added: Injury or equipment damage can result from loss of PLC or Controller Logic Commands (Stop, Start, etc.) when all these conditions are true: - module firmware 3.04 or lower. - 230.4k baud rate. - block transfer is enabled (DIP switch SW3-1 is ON). - block transfers to the module are used (in the ladder program or by DriveTools/ DriveTools32 using a Remote I/O pass thru connection). Do not use the 230.4k baud rate if you are using a module with 3.04 or earlier firmware and your program uses block transfers. Use the 57.6k or 115.2k baud rate instead.
2-6	Attention statement added: Due to an anomaly in firmware release 4.01, Remote I/O modules that are used only for block transfer messages require the following configuration: switches for block transfer and reference/feedback should both be enabled (SW 3.1 and SW 3.3 are ON. SW 3.2 and SW 3.4 through 3.8 are OFF). This configuration prevents a fault on power up. It does not affect rack I/O allocation or the ladder logic program because it still fits within 1/4 rack I/O space. The drive will, however, generate a serial fault if the communications module is disconnected or loses power.

Artisan Scientific - Quality Instrumentation ... Guaranteed | (888) 88-SOURCE | www.artisan-scientific.com

End of Summary of Changes

Table of Contents

Using This Manual

Preface

Preface Objectives P-1
Audience for This Manual P-1
Purpose of This Manual P-1
Firmware Support P-1
Terms and Abbreviations. P-2
Safety Precautions P-3
Rockwell Automation Support. P-4

Overview

Chapter 1

Chapter Objectives 1-1
Description of the Remote I/O Communications Modules 1-1
Features of the Communications Module 1-2
Compatibility 1-3
Hardware Description 1-4
Required Tools and Equipment. 1-6
Overview of Setting Up the Module 1-6

Configuring the Module

Chapter 2

Chapter Objectives 2-1
Safety Precautions and Important Information 2-1
Locating the DIP Switches 2-2
Factory-Default Settings 2-3
Quick Configuration 2-3
Configuring the module. 2-4
Setting Switches on SW3 2-5
Setting Switches on SW2 2-8
Setting Switches on SW1 2-12

Installing the Module

Chapter 3

Chapter Objectives 3-1
Selecting Cables. 3-1
Selecting a Termination Resistor 3-2
Installing a 1203-GD1 or 1203-GK1 Module. 3-3
Installing a 1336-GM1 Board 3-6

Creating Ladder Logic Programs

Chapter 4

Chapter Objectives 4-1
Understanding the I/O Image Table 4-1
Control Features 4-2
Datalinks 4-2
Settings for the Ladder Logic Program Examples. 4-5
Example PLC Ladder Logic Program 4-8
Example SLC Ladder Logic Program 4-10
Example Logix5550 Ladder Logic Program 4-12

Artisan Scientific - Quality Instrumentation ... Guaranteed | (888) 88-SOURCE | www.artisan-scientific.com

Using Block Transfer Messages

Chapter 5

Chapter Objectives 5-1
Understanding Block Transfer 5-1
Understanding the Block Transfer Status Word 5-2
Understanding Data Storage 5-3
Example PLC Block Transfers 5-3
Example SLC Block Transfers 5-5
Example Logix5550 Block Transfers 5-7
Notes Regarding Block Transfer Programming 5-8

Troubleshooting

Chapter 6

Chapter Objectives 6-1
LEDs on the Remote I/O Communications Module 6-1
FAULT LED 6-2
SCANport STS LED 6-2
Health LED 6-2
Rem I/O ACT LED 6-2
Rem I/O STS LED 6-2

Specifications

Appendix A

Appendix Objectives A-1
1336-GM1 Board Specifications A-1
1203-GD1 Module Specifications A-2
1203-GK1 Module Specifications A-2

Supported Block Transfer Messages

Appendix B

Appendix Objectives B-1
Supported Block Transfer Messages B-1
Block Transfer Data Structure B-2
Parameter Value Read B-3
Parameter Value Write B-4
Parameter Read Full B-5
Product ID Number Read B-8
Scattered Parameter Value Read B-10
Scattered Parameter Value Write B-12
Continuous Parameter Value Read B-14
Save/Recall/Initialize B-16
Fault Command Write B-17
Fault Queue Entry Read Full B-18
Fault Queue Size Read B-20
Trip Fault Queue Number Read B-21
Block Transfer Quick Reference B-22

Artisan Scientific - Quality Instrumentation ... Guaranteed | (888) 88-SOURCE | www.artisan-scientific.com

Using This Manual

Preface Objectives

Read this preface to familiarize yourself with the rest of the manual. In this preface, you will read about the following:

- Intended audience for this manual.
- Purpose of this manual.
- Firmware supported by this manual.
- Terms and abbreviations.
- Safety precautions.
- Rockwell Automation support.

Audience for This Manual

Use this manual if you are responsible for setting up and using a Remote I/O communications module (Bulletin numbers 1203-GD1, 1203-GK1, or 1336-GM1). You must have previous experience with and a basic understanding of communications terminology, configuration procedures, required equipment, and safety precautions.

To use this Remote I/O communications module efficiently, you must be able to program and operate programmable controllers as well as have a basic understanding of the parameter settings and functions of the SCANport™ product with which you are communicating.

Purpose of This Manual

This manual is an installation and user guide for the Remote I/O communications module. The 1203 Remote I/O communications modules are available for products that include SCANport.

This manual provides the following information:

- An overview of the Remote I/O communications module.
- Procedures that you need to install, configure, and troubleshoot the Remote I/O communications module.
- Example ladder logic programs for controlling a product and using block transfer messages.

Important: You should read this manual in its entirety before configuring, installing, operating, or troubleshooting the Remote I/O communications module.

Firmware Support

This manual supports firmware versions 1.xx to 4.xx (the “xx” designator may vary). Features that work with specific firmware versions will be identified.

Artisan Scientific - Quality Instrumentation ... Guaranteed | (888) 88-SOURCE | www.artisan-scientific.com

Contents of this Manual

Chapter	Title	Contents
Preface	Using This Manual	Descriptions of the audience, purpose, background, and scope of this manual.
1	Overview	Features of the Remote I/O communications module.
2	Configuring the Module	Procedures for setting DIP switches.
3	Installing the Module	Procedures for mounting, connecting cables, and connecting power.
4	Creating Ladder Logic Programs	Information about addressing, information transfer, and sample programs.
5	Using Block Transfer Messages	Information about messaging and sample programs.
6	Troubleshooting	Information about troubleshooting the module.
A	Specifications	Environmental, electrical, and communication specifications.
B	Supported Block Transfer Messages	Information about block transfer messages.

Related Documentation

You can obtain documentation about Allen-Bradley products, including PLC controllers, SLC controllers, Logix5550 controllers, and drives, from your local Rockwell Automation office or distributor. You can also access documents online at http://www.ab.com/manuals

Application notes are available at http://www.ab.com/drives/stddrives/faxback/faxback.htm

Terms and Abbreviations

The following terms are specific to this product. For a complete listing of automation terminology, refer to the *Rockwell Automation Industrial Automation Glossary*, Publication Number AG-7.1.

Terms	Definition
Controller	A solid-state control system that has a user-programmable memory for storage of instructions to implement specific functions such as I/O control, logic, timing, counting, report generation, communication, arithmetic, and data file manipulation. A controller is also called a “programmable logic controller” or “processor.”
Remote I/O	I/O connected to a processor across a serial link. With a serial link, remote I/O can be located long distances from the processor.
Remote I/O Communications Module	This module connects a SCANport product to a Remote I/O link. There are three types of Remote I/O communications modules: 1203-GD1 module, 1203-GK1 module, and 1336-GM1 board. The Remote I/O module is also referred to as “adapter,” “module,” and communications module.”
SCANport	A standard peripheral communications interface for various Allen-Bradley drives and power products.
SCANport Peripheral	A device that provides an interface between SCANport and a communications system such as Remote I/O. It is often referred to as an adapter or communications module. For example, the Remote I/O module is a SCANport peripheral.
SCANport Product	A device that uses the SCANport communications interface to communicate with one or more peripheral devices. For example, a motor drive such as a 1336 PLUS is a SCANport product.

Artisan Scientific - Quality Instrumentation ... Guaranteed | (888) 88-SOURCE | www.artisan-scientific.com

Safety Precautions

ATTENTION: Only personnel familiar with SCANport devices and associated machinery should plan or implement the installation, start-up, configuration, and subsequent maintenance of the Remote I/O communications module. Failure to comply may result in personal injury and/or equipment damage.

ATTENTION: The 1336-GM1 board contains Electrostatic Discharge (ESD) sensitive parts and assemblies. Static control precautions are required when handling this assembly. Component damage may result if ESD control procedures are not followed. If you are not familiar with static control procedures, refer to Allen-Bradley Publication 8000-4.5.2, *Guarding Against Electrostatic Damage* or any other applicable ESD protection handbook.

ATTENTION: Injury or equipment damage can result from loss of PLC or Controller Logic Commands (Stop, Start, etc.) when all these conditions are true:

- module firmware 3.04 or lower.
- 230.4k baud rate.
- block transfer is enabled (DIP switch SW3-1 is ON).
- block transfers to the module are used (in the ladder program or by DriveTools/DriveTools32 using a Remote I/O pass thru connection).

Do not use the 230.4k baud rate if you are using a module with 3.04 or earlier firmware and your program uses block transfers. Use the 57.6k or 115.2k baud rate instead.

ATTENTION: Hazard of equipment damage exists. If block transfer messages are programmed to frequently write parameter data, the EEPROM (Non-Volatile Storage) will quickly exceed its life cycle and cause the product to malfunction. Do not create a program that frequently uses block transfer messages to write parameter data to a product. Datalinks do not write to the EEPROM and should be used for frequently changed parameters.

ATTENTION: Hazard of equipment damage exits. Firmware version 3.04 has the following anomaly: If DIP Switch 2-5 is OFF (No Fault), the product remains in its last state after a communications loss occurs no matter how DIP Switch 2-4 is set. If you must use zero data, contact Rockwell Automation Technical Support.

Artisan Scientific - Quality Instrumentation ... Guaranteed | (888) 88-SOURCE | www.artisan-scientific.com

Rockwell Automation Support

Rockwell Automation offers support services worldwide, with more than 75 sales/support offices, more than 500 authorized distributors, and more than 250 authorized systems integrators located throughout the United States alone. In addition, Rockwell Automation representatives are in every major country in the world.

Local Product Support

Contact your local Rockwell Automation representative for:

- Sales and order support.
- Product technical training.
- Warranty support.
- Support service agreements.

Technical Product Support

If you need to contact Rockwell Automation for technical assistance, please call your local Rockwell Automation representative.

Artisan Scientific - Quality Instrumentation ... Guaranteed | (888) 88-SOURCE | www.artisan-scientific.com

Overview

Chapter Objectives

Chapter 1 provides an overview of the Remote I/O communications module (1203-GD1 module, 1203-GK1 module, and 1336-GM1 board). In this chapter, you will read about the following:

- Function of the module.
- Features of the module.
- Compatible SCANport products and programmable controllers.
- Parts and hardware of the module.
- Steps for setting up the module.
- Required tools and equipment.

Description of the Remote I/O Communications Modules

The Remote I/O communications module is an optional interface designed to provide a direct, digital link between an Allen-Bradley programmable controller and any one Allen-Bradley SCANport product. A module is required for each product that you want to connect to Remote I/O. There are three types of Remote I/O communications modules:

Catalog Number	Enclosure	Required Power Supply
1203-GD1	NEMA Type 1	85 – 264V AC
1203-GK1	NEMA Type 1	24V DC +/- 10%
1336-GM1	Open	Drive Supplied

Figure 1.1 Module and Board

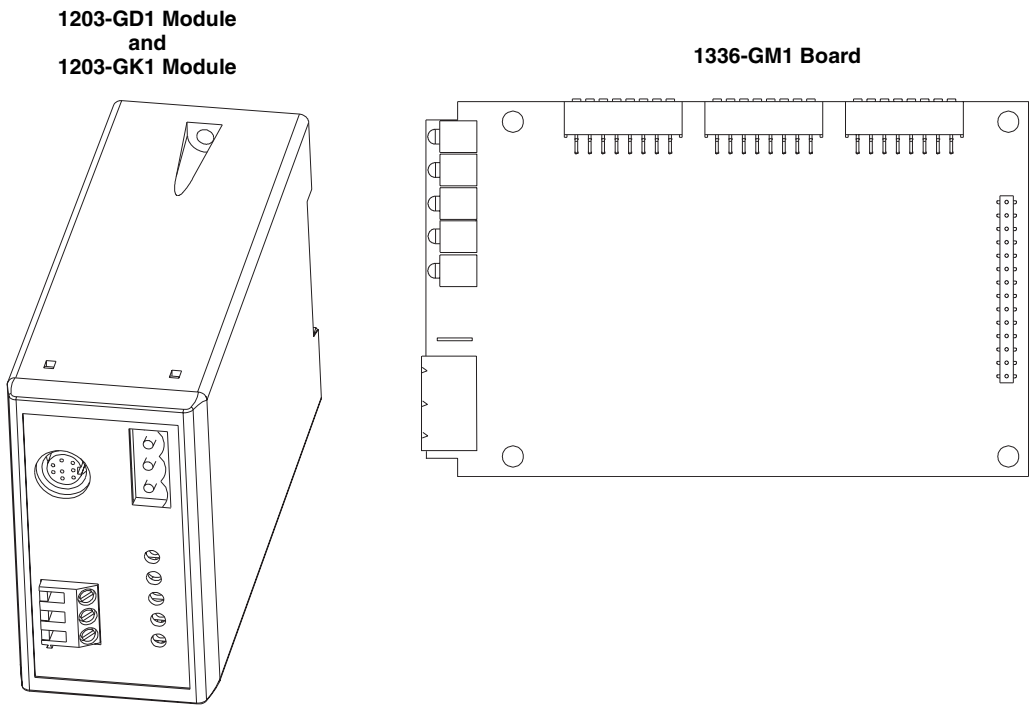

Artisan Scientific - Quality Instrumentation ... Guaranteed | (888) 88-SOURCE | www.artisan-scientific.com

The 1203-GD1 and 1203-GK1 modules mount on a DIN rail. They connect to a SCANport product using a SCANport cable and to the Remote I/O link using a Remote I/O cable. The 1336-GM1 board mounts directly onto selected SCANport products. It connects to a SCANport product using an internal SCANport connector and to the Remote I/O link using a Remote I/O cable.

Figure 1.2 shows how the modules connect SCANport products to the Remote I/O link.

Figure 1.2 Remote I/O Link with Remote I/O Communications Modules

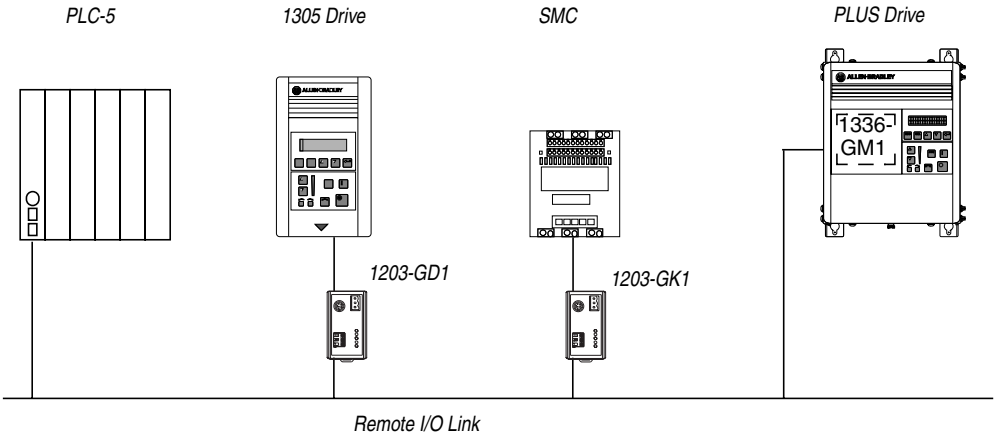

Features of the Communications Module

The 1203-GD1 module, 1203-GK1 module, and 1336-GM1 board let you connect SCANport products to Remote I/O links and devices. These modules feature the following:

- DIP switches let you configure how the Remote I/O module operates before connecting it to the link.
- User-configurable fault action DIP switches let you customize the module actions when communication errors occur.
- LEDs report link, module, and SCANport product health.
- Datalinks are supported in the module. Datalinks are a SCANport mechanism for transferring information between a controller and SCANport device. Each enabled datalink uses two words in the I/O image table unless it is truncated.

Artisan Scientific - Quality Instrumentation ... Guaranteed | (888) 88-SOURCE | www.artisan-scientific.com

Compatibility

SCANport Products

Remote I/O modules are compatible with many SCANport products, including the following:

Product	Number of Peripherals Supported	I/O Words		Module Use	
		Minimum	Maximum③	1203-GD1 or 1203-GK1	1336-GM1
1305 AC MICRO Drive①	5	0	8	Yes	No
1336 IMPACT™ Drive	6②	0	8	Yes	Yes④
1336 PLUS AC Drive	6②	0	8	Yes	Yes④
1336 PLUS II Drive	6②	0	8	Yes	Yes
1336 FORCE™ Drive	6②	0	8	Yes	Yes④
1336 REGEN Line Regeneration Package	2	0	2⑤	Yes	No
1336 SPIDER Drive	6②	0	8	Yes	Yes
1394 AC Mult-Axis Motion Control System	5	0	8	Yes	No
SMC Dialog Plus™	1	0	2⑤	Yes	No
SMP-3 Smart Motor Protector	2	0	2⑤	Yes	No
1397 Digital DC Drive	5	0	8	Yes	No
1557 Medium Voltage Drive	5	0	8	Yes	No
2364F Regenerative DC Bus Supply Unit	6	0	8	Yes	No

① The Remote I/O modules are compatible with 1305 drives using firmware release 2.xx or greater.

② Lower horsepower products may not support a sixth peripheral. To connect multiple peripherals to a SCANport product, a port expander may be required. Refer to the product user manual to verify that it supports a sixth peripheral.

③ Many SCANport products support 10 words of I/O (Command/Logic, Speed Reference, and four datalinks). Remote I/O, however, supports only 8 words of I/O.

④ Drive must be B-frame or larger. If it is a 1336 FORCE drive, it must use a standard adapter board.

⑤ Datalinks are not supported by this product.

If you intend to use datalinks to communicate with and control your SCANport product, verify that your SCANport product supports datalinks before enabling them in the module.

Controllers

This Remote I/O communications module is compatible with many programmable controllers, including the following:

- Logix5550
- PLC-2/30® with SD2 (module version 1.02 or later)
- PLC-3®
- PLC Classic Family, including the PLC-5/10 (only with 1771-SN in Discrete Mode), PLC-5/15™, PLC-5/25™ family
- PLC Enhanced family, including the PLC-5/20™, PLC-5/30, PLC-5/40™, PLC-5/40L™, PLC-5/60™, PLC-5/60L™family, PLC-5/80™
- PLC-5/250™
- PLC scanner modules and subscanners
- SLC 500™ with 1747-SN scanner

Artisan Scientific - Quality Instrumentation ... Guaranteed | (888) 88-SOURCE | www.artisan-scientific.com

Hardware Description

The hardware included with the module depends on the module that you have.

1203-GD1 and 1203-GK1 Modules

The 1203-GD1 module and 1203-GK1 module share the same parts. Figure 1.3 illustrates these parts.

Figure 1.3 Parts of the 1203-GD1 and 1203-GK1 Module

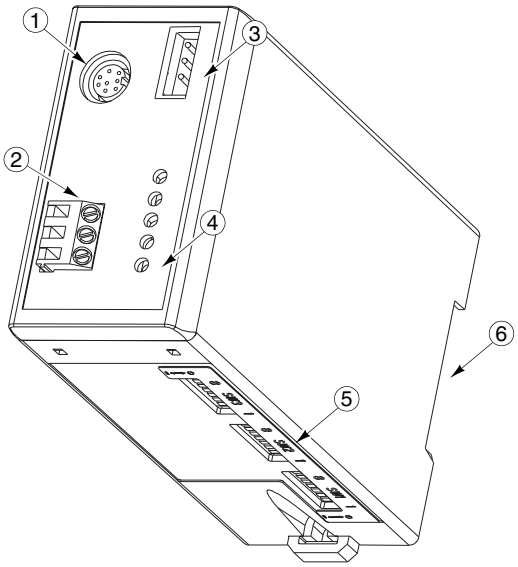

#	Part	Description
1	SCANport Connection	Standard SCANport 8-pin mini-DIN connector for the SCANport cable.
2	Power Supply Connections	Connections for the power supply. Multiple connections allow daisy-chaining. The 1203-GD1 module uses 85 – 264V AC. The 1203-GK1 module uses 24V DC.
3	Remote I/O Connection	Standard 3-pin Remote I/O connector.
4	LEDs	Status indicators for the module, SCANport connection, and Remote I/O connection. Refer to Chapter 6.
5	DIP Switches	Switches used to configure the module. Refer to Chapter 2.
6	DIN Rail Mount	Mount for securely attaching and electrically grounding the module to a DIN rail.
Not Shown	Remote I/O connector	One 3-pin connector for connecting the Remote I/O cable to the module.
Not Shown	Termination Resistors	Two termination resistors for terminating the I/O link at its physical ends. Refer to Chapter 3.

Artisan Scientific - Quality Instrumentation ... Guaranteed | (888) 88-SOURCE | www.artisan-scientific.com

1336-GM1 Board Hardware

Figure 1.4 illustrates the main parts of a 1336-GM1 board.

Figure 1.4 Parts of the 1336-GM1 Board

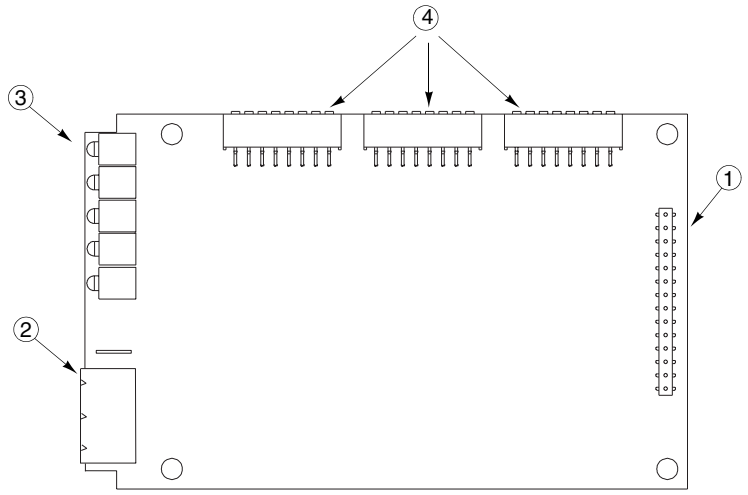

#	Part	Description
1	SCANport Connection	Internal 14-pin female SCANport connector.
2	Remote I/O Connection	Standard 3-pin Remote I/O connector.
3	LEDs	Status indicators for the module, SCANport connection, and Remote I/O connection. Refer to Chapter 6.
4	DIP Switches	Switches used to configure the module. Refer to Chapter 2.
Not Shown	Kit	Materials for mounting the board to the SCANport product. These material include one grounding wrist strap, four Phillips mounting screws, four stand-off nylon headers, one 3-pin Remote I/O connector, one snap-in comm housing with mounting instructions, and termination resistors.

Artisan Scientific - Quality Instrumentation ... Guaranteed | (888) 88-SOURCE | www.artisan-scientific.com

Required Tools and Equipment

The tools and equipment required, depend on if you are using a 1203-GD1 module, 1203-GK1 module, or 1336-GM1 board.

1203-GD1 or 1203-GK1 Module

To install and configure a 1203-GD1 module or 1203-GK1 module, you need the following:

- Remote I/O communications module (1203-GD1 or 1203-GK1).
- 35 x 7.5 mm DIN rail.
- Termination resistor(s).
- Power source.
- 1/8" flathead screwdriver.
- Appropriate cables for SCANport and Remote I/O connections. Refer to Chapter 3.
- Software such as RSLogix5, RSLogix500, or RSLogix5000 for programming the controller.

1336-GM1 Board

To install and configure a 1336-GM1 board, you need the following:

- Remote I/O communications board (1336-GM1).
- A kit that includes one grounding wrist strap, four Phillips mounting screws, four stand-off nylon headers, one 3-pin connector, and one snap-in comm housing with mounting instructions (supplied with board).
- #1 Phillips screwdriver.
- Appropriate cable for the Remote I/O connection. Refer to Chapter 3.
- Software such as RSLogix5, RSLogix500, or RSLogix5000 for programming the controller.

Overview of Setting Up the Module

To set up the Remote I/O communications module, you must perform the following tasks:

1. Read the safety precautions in this manual.
2. Configure the module using the DIP switches. Refer to Chapter 2.
3. Install the module or mount the board. Refer to Chapter 3.
4. Create a ladder logic program to control the SCANport product (Chapter 4) or send messages to it (Chapter 5).

Artisan Scientific - Quality Instrumentation ... Guaranteed | (888) 88-SOURCE | www.artisan-scientific.com

Configuring the Module

Chapter Objectives

Chapter 2 provides instructions and information for configuring the Remote I/O communications module (1203-GD1, 1203-GK1, or 1336-GM1). In this chapter, you will read about the following:

- Factory-default settings.
- Recording the I/O image table.
- Configuring the module.

Important: The communications module is not compatible with complementary I/O configurations because it uses both output and input image words for proper product control.

Safety Precautions and Important Information

Please observe the following safety precautions:

ATTENTION: Hazard of equipment damage exists. When you make changes to the switch settings, use a blunt, pointed instrument. Do not use a pencil or pen.

ATTENTION: Hazard of injury or equipment damage exists. Failure to check connections and switch settings for compatibility with your application could result in unintended or undesirable operation. Verify the configuration is correct for your application.

ATTENTION: Hazard of injury or equipment damage exists. Unintended or incorrect machine motion can result from the initial configuration. When a system is configured for the first time, the motor must be disconnected from the machine or process during initial system testing.

Important: Due to an anomaly in firmware release 4.01, Remote I/O modules that are used only for block transfer messages require the following configuration: switches for block transfer and reference/feedback should both be enabled (SW 3.1 and SW 3.3 are ON. SW 3.2 and SW 3.4 through 3.8 are OFF).
This configuration prevents a fault on power up. It does not affect rack I/O allocation or the ladder logic program because it still fits within 1/4 rack I/O space. The drive will, however, generate a serial fault if the communications module is disconnected or loses power.

Artisan Scientific - Quality Instrumentation ... Guaranteed | (888) 88-SOURCE | www.artisan-scientific.com

Locating the DIP Switches

Figure 2.1 Switches on the 1203-GD1 and 1203-GK1 Modules

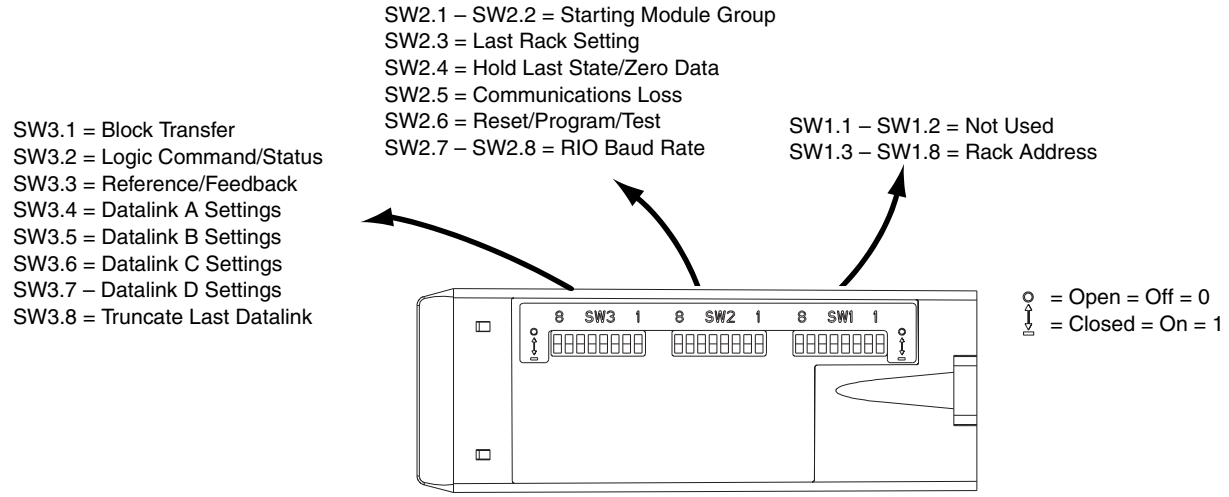

Bottom View

Figure 2.2 Switches on the 1336-GM1 Board

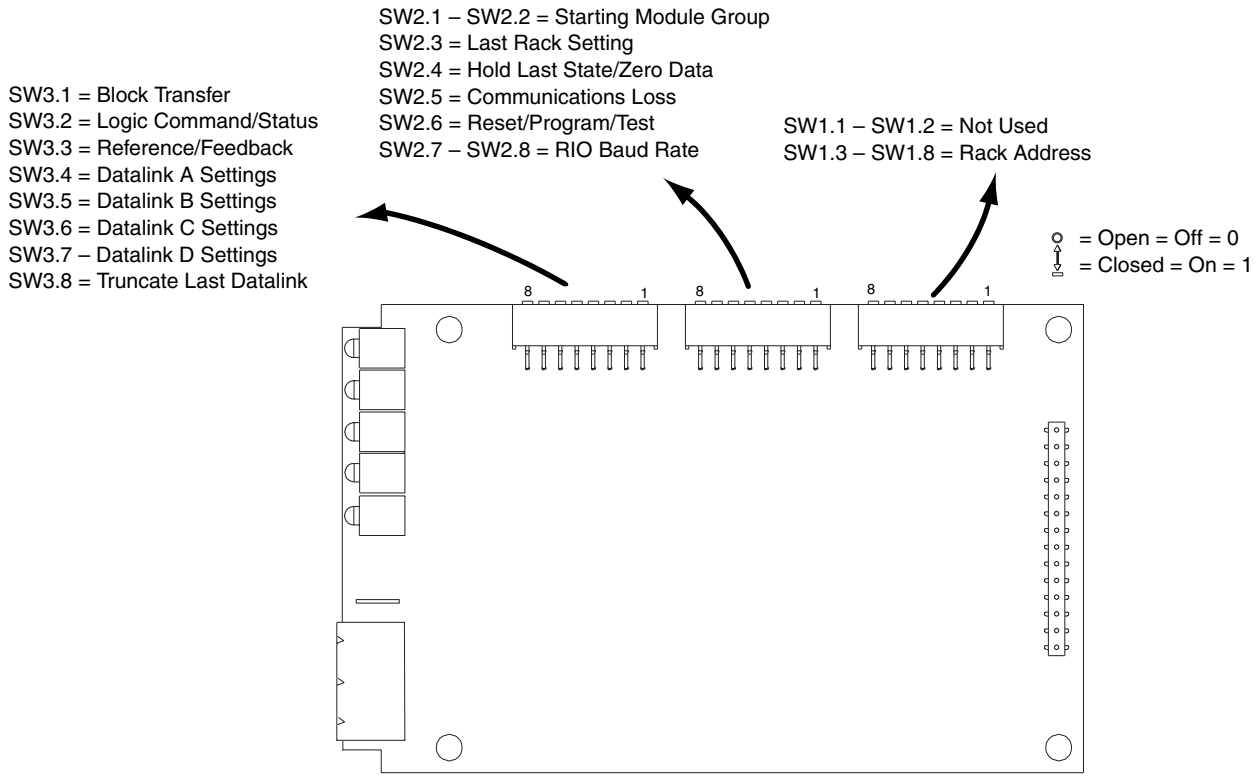

Front View

Artisan Scientific - Quality Instrumentation ... Guaranteed | (888) 88-SOURCE | www.artisan-scientific.com

Factory-Default Settings

The module is shipped with the following settings:

Feature	Switch(es)	Default Setting
Block Transfer	3.1	Enabled
Logic Command/Status	3.2	Enabled
Reference/Feedback	3.3	Enabled
Datalinks	3.4 – 3.7	Datalinks A and B are Enabled Datalinks C and D are Disabled
Truncate Last Datalink	3.8	Disabled
Starting Group	2.1 – 2.2	0
Last Rack	2.3	Not Last Rack
Fault Action	2.4 – 2.6	Fault on communications loss Hold last state on reset/program/test
Baud Rate	2.7 – 2.8	57.6K
Not Used	1.1 – 1.2	Not Used
Rack Address	1.3 – 1.8	2

Quick Configuration

For detailed switch information, refer to pages 2–4 through 2–13.

	Switch	Setting		Description
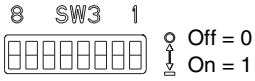	3.1	0 1		Disable block transfer Enable block transfer
	3.2	0 1		Disable Logic Command/Status Enable Logic Command/Status
	3.3	0 1		Disable Reference/Feedback Enable Reference/Feedback
	3.4	0 1		Disable Datalink A (A1 and A2) Enable Datalink A (A1 and A2)
	3.5	0 1		Disable Datalink B (B1 and B2) Enable Datalink B (B1 and B2)
	3.6	0 1		Disable Datalink C (C1 and C2) Enable Datalink C (C1 and C2)
	3.7	0 1		Disable Datalink D (D1 and D2) Enable Datalink D (D1 and D2)
	3.8	0 1		Disable truncate last datalink Enable truncate last datalink
	2.1 – 2.2	2.2 1 0 1 0	2.1 1 1 0 0	 Starting group 0 Starting group 2 Starting group 4 Starting group 6
	2.3	0 1		Not last rack Last rack with this address
	2.4	0 1		Hold last state Zero data
	2.5	0 1		No fault. Use action of switch 2.4 Fault drive on communications loss
	2.6	0 1		No fault. Use action of switch 2.4 Fault drive on Reset/Program/Test
	2.7 – 2.8	2.8 0 0 1	2.7 0 1 0	 57.6 kbps 115.2 kbps 230.4 kbps
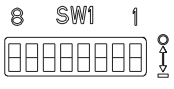	1.1 – 1.2			Not Used
	1.3 – 1.8	Varies		See “Setting the Rack Address” on page 2-13

Artisan Scientific - Quality Instrumentation ... Guaranteed | (888) 88-SOURCE | www.artisan-scientific.com

Configuring the module

As you configure your module, you should complete the I/O image table. First, size the I/O using switch SW3. Next, set the rack address using switch SW1. Finally, select the starting group, last rack setting, fault action, and baud rate using switch SW2. For more information on the I/O image table, refer to the example below and Chapter 4.

I/O Image Table

Remote I/O Address	Reserved For:		Minimum Required Rack Size	Starting Group
	Output Image	Input Image		
			1/4 Rack	0, 2, 4, or 6
			1/2 Rack	0, 2, or 4
			3/4 Rack	0 or 2
			Full Rack	0 only

Example I/O Image Table

In this example, we use the factory-default settings. We use rack 2, and record it as our address. Because we are using a full rack, we use starting group 0, so block transfer starts at word 0.

Remote I/O Address	Reserved For:		Minimum Required Rack Size	Starting Group
	Output Image	Input Image		
020	Block Transfer	Block Transfer	1/4 Rack	0, 2, 4, or 6
021	Logic Command	Logic Status		
022	Reference	Feedback	1/2 Rack	0, 2, or 4
023	Datalink A	Datalink A		
024	Datalink A	Datalink A	3/4 Rack	0 or 2
025	Datalink B	Datalink B		
026	Datalink B	Datalink B	**Full Rack**	0 only
027				

Switch	Settings 8 ---> 1	Description
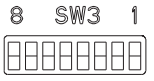	00011111	Block transfer is enabled. Logic command/status is enabled. Reference/feedback is enabled. Datalink A is enabled. Datalink B is enabled. Truncate last datalink is disabled.
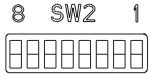	00011011	Starting group is 0. This is not the last rack. Drive will fault when communications are disrupted, and it will hold last state when the controller is placed in program/reset/test. Remote I/O baud rate is 57.6K.
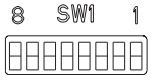	10111100	Rack address is 2.

Artisan Scientific - Quality Instrumentation ... Guaranteed | (888) 88-SOURCE | www.artisan-scientific.com

Setting Switches on SW3

ATTENTION: Injury or equipment damage can result from loss of PLC or Controller Logic Commands (Stop, Start, etc.) when all these conditions are true:

- module firmware 3.04 or lower.
- 230.4k baud rate.
- block transfer is enabled (DIP switch SW3-1 is ON).
- block transfers to the module are used (in the ladder program or by DriveTools/DriveTools32 using a Remote I/O pass thru connection).

Do not use the 230.4k baud rate if you are using a module with 3.04 or earlier firmware and your program uses block transfers. Use the 57.6k or 115.2k baud rate instead.

Setting Block Transfer

SW 3.1 enables or disables block transfer. Enable block transfer if you are using messages (refer to Chapter 5) in your ladder logic program or if you are using DriveTools32 software.

Important: You cannot use both messages and DriveTools32 software at the same time.

Block transfer uses the first module group (word) in the rack and group.

Figure 2.3 Block Transfer Switch

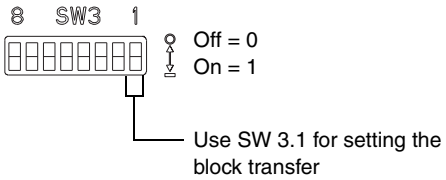

To edit the block transfer setting, you need to:

1. Refer to the following table to determine the setting for SW 3.1:

Block Transfer	SW 3.1
Disabled	0
Enabled	1

2. Slide the switch to its appropriate position.
3. If Block Transfer is enabled, record “Block Transfer” in the first module group (word) of your I/O image table on page 2–4.

Settings take effect when a module or board first receives power. When you change a setting, you must remove and then reapply power for the new setting to take effect.

Artisan Scientific - Quality Instrumentation ... Guaranteed | (888) 88-SOURCE | www.artisan-scientific.com

Important: Due to an anomaly in firmware release 4.01, Remote I/O modules that are used only for block transfer messages require the following configuration: switches for block transfer and reference/feedback should both be enabled (SW 3.1 and SW 3.3 are ON. SW 3.2 and SW 3.4 through 3.8 are OFF).
This configuration prevents a fault on power up. It does not affect rack I/O allocation or the ladder logic program because it still fits within 1/4 rack I/O space. The drive will, however, generate a serial fault if the communications module is disconnected or loses power.

Setting Logic Command and Status

SW 3.2 enables or disables the word used for logic command and status (e.g., start, stop, direction). Logic command/status uses one word in the rack and group.

Figure 2.4 Logic Command/Status Switches

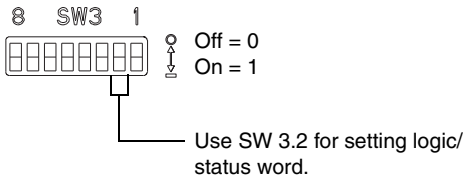

To edit the command/status setting, you need to:

1. Refer to the following table to determine the setting for SW 3.2:

Command I/O	SW 3.2
Disabled	0
Enabled	1

2. Slide the switch to its appropriate position.
3. If Logic Command/Status is enabled, record “Logic Cmd” in the first available module group (word) of the output column and “Logic Sts” in the first available module group (word) of the input column of your I/O image table on page 2–4.

Settings take effect when a module or board first receives power. When you change a setting, you must remove and then reapply power for the new setting to take effect.

Setting the Reference and Feedback

SW 3.3 enables or disables the word used for reference and feedback (e.g., speed reference, torque reference). Reference/feedback uses one word in the rack and group.

Artisan Scientific - Quality Instrumentation ... Guaranteed | (888) 88-SOURCE | www.artisan-scientific.com

Figure 2.5 Reference/Feedback Switch

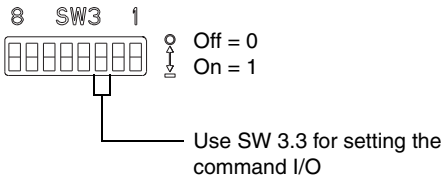

To edit the reference/feedback setting, you need to:

1. Refer to the following table to determine the setting for SW 3.3:

Reference/Feedback	SW 3.3
Disabled	0
Enabled	1

2. Slide the switch to its appropriate position.
3. If Reference/Feedback is enabled, record “Reference” in the first available module group (word) of the output column and “Feedback” in the first available module group (word) of the input column of your I/O image table on page 2–4.

Settings take effect when a module or board first receives power. When you change a setting, you must remove and then reapply power for the new setting to take effect.

Artisan Scientific - Quality Instrumentation ... Guaranteed | (888) 88-SOURCE | www.artisan-scientific.com

Setting Datalinks

SW 3.7 through SW 3.4 enable or disable datalinks. A datalink is a type of pointer used by some SCANport products to transfer data to and from a controller. You can use datalinks to change or monitor the value of parameters without using block transfer messages. Each datalink consists of two 16-bit words of input and two 16-bit words of output. You can enable up to four datalinks (eight words in and out).

Refer to Chapter 4 for detailed datalink information and examples.

Figure 2.6 Datalink Switches

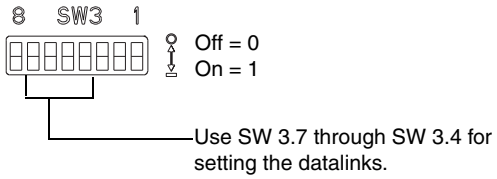

Important: Ensure that datalinks are supported and enabled in the SCANport product before you enable them in the Remote I/O module. You do not have to use datalinks. If you do use them, remember that a datalink in a drive can be used by only one communications module. Datalinks do not write to the EEPROM.

To edit the datalinks, you need to:

1. Refer to the following table to determine the settings for SW 3.7 through SW 3.4:

Function	Datalink D SW 3.7	Datalink C SW 3.6	Datalink B SW 3.5	Datalink A SW 3.4
Disable	0	0	0	0
Enable	1	1	1	1

2. Slide the switches to their appropriate positions.
3. For each enabled datalink, record “Datalink [A, B, C, or D]” in the first two available module groups (words) of the output and input columns of your I/O image table on page 2–4.

Settings take effect when a module or board first receives power. When you change a setting, you must remove and then reapply power for the new setting to take effect.

Setting the Truncate Last Datalink Feature

SW 3.8 enables or disables the truncate last datalink feature. All datalinks are two words. If this feature is enabled, the second word of the last datalink is deleted. For example, if datalinks A and B are enabled and this feature is enabled, Data In B2 and Data Out B2 are truncated. This feature can save rack space by maintaining an even number of words in your rack.

Important: This feature is available only on modules with firmware 1.02 or later.

Artisan Scientific - Quality Instrumentation ... Guaranteed | (888) 88-SOURCE | www.artisan-scientific.com

Figure 2.7 Truncate Last Datalink Switch

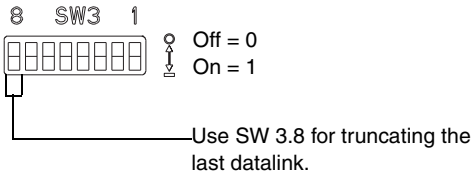

To set the truncate last datalink feature, you need to:

1. Refer to the following table to determine the setting for SW 3.8:

Duplicate Message Detection	SW 3.8
Disable	0
Enable	1

2. Slide the switch to its appropriate position.
3. If the switch is enabled, cross out the second module group (word) of the last datalink in your I/O image table on page 2–4.

Settings take effect when a module or board first receives power. When you change a setting, you must remove and then reapply power for the new setting to take effect.

Setting Switches on SW2

Setting the Starting Group

SW 2.2 and SW 2.1 set the starting group. A starting group is the word in a rack at which the group starts. The starting group depends on the rack size. To determine the starting group, you must set the switches on SW3 and calculate the rack size. A full rack is 8 words. For example, if we enabled the switches for Logic Command/Status, Reference/Feedback, and datalink A, we use 4 words in the rack, so we need a 1/2 rack. Using the table below as a guide, we could set the starting group for word 0, 2, or 4 for our example.

Figure 2.8 Starting Group Switches

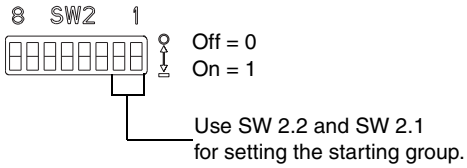

To edit the starting group, you need to:

1. Refer to the following table to determine starting groups that you can use:

Rack Size	Starting Group
1/4	0, 2, 4, or 6
1/2	0, 2, or 4
3/4	0 or 2
Full	0

Artisan Scientific - Quality Instrumentation ... Guaranteed | (888) 88-SOURCE | www.artisan-scientific.com

2. Refer to the following table to set SW 2.2 and SW 2.1:

Starting Group	SW 2.2	SW 2.1
0	1	1
2	0	1
4	1	0
6	0	0

3. Slide the switches to their appropriate positions.

Settings take effect when a module or board first receives power. When you change a setting, you must remove and then reapply power for the new setting to take effect.

Setting the Last Rack Switch

SW 2.3 lets you notify a controller that the connected product is the last device with this rack address. You must set this switch if a product is the last device with this rack address and you are using a PLC-2 controller. It is recommended that you set this switch when you are using other controllers.

Figure 2.9 Last Rack Switch

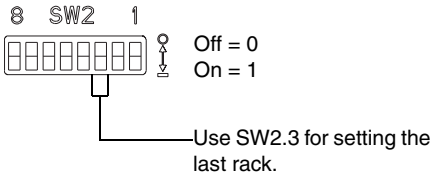

To edit the last rack settings, you need to:

1. Refer to the following table to determine the switch setting for SW 2.3:

Setting	SW2.3
Not Last Rack	0
Last Rack	1

2. Slide the switch to its appropriate position.

Settings take effect when a module or board first receives power. When you change a setting, you must remove and then reapply power for the new setting to take effect.

Artisan Scientific - Quality Instrumentation ... Guaranteed | (888) 88-SOURCE | www.artisan-scientific.com

Setting the Fault Action

SW 2.6 through SW 2.4 let you configure how a Remote I/O module and connected product act when Remote I/O communications fail (e.g., disconnected cable) or the controller is switched to program or test mode. You can use fault, hold last state, or zero data. If you select hold last state, a product continues in its present state after a communications disruption. If you select zero data, the data output to the product is zeroed. Zero data does not command a stop.

ATTENTION: Risk of bodily injury or equipment damage exists. These switches allow the user to change the default configuration that would fault the drive if communication is lost. Precautions should be taken to ensure that settings for these switches do not create a hazard of bodily injury or equipment damage.

ATTENTION: Hazard of equipment damage exits. Firmware version 3.04 has the following anomaly: If DIP Switch 2.5 is OFF (No Fault), the product remains in its last state after a communications loss occurs no matter how DIP Switch 2.4 is set. If you must use zero data, contact Rockwell Automation Technical Support.

Figure 2.10 Fault Action Configuration Switches

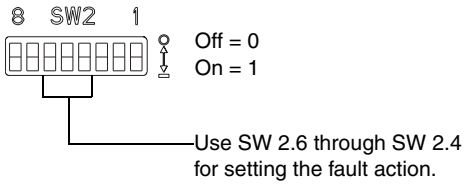

To change the fault action, you need to:

1. Refer to the following table to determine the setting for SW 2.6:

Fault on Reset/Program/Test	SW 2.6
No Fault	0
Fault Product	1

Important: Switch SW 2.6 is active only on modules with firmware 2.xx and later

2. Refer to the following table to determine the setting for SW 2.5:

Fault on Communications Loss	SW 2.5
No Fault	0
Fault Product	1

3. If you set SW 2.6 or SW 2.5 to 0 (No Fault), set SW 2.4 to select an action when a condition that normally causes a drive fault occurs:

Function	SW 2.4
Hold last state	0
Zero data	1

Artisan Scientific - Quality Instrumentation ... Guaranteed | (888) 88-SOURCE | www.artisan-scientific.com

4. Slide the switches to their appropriate positions.

Settings take effect when a module or board first receives power. When you change a setting, you must remove and then reapply power for the new setting to take effect.

Setting the Remote I/O Baud Rate

SW 2.8 and SW 2.7 set the baud rate at which the Remote I/O module communicates.

ATTENTION: Injury or equipment damage can result from loss of PLC or Controller Logic Commands (Stop, Start, etc.) when all these conditions are true:

- module firmware 3.04 or lower.
- 230.4k baud rate.
- block transfer is enabled (DIP switch SW3.1 ON).
- block transfers to the module are used (in the ladder program or by DriveTools/DriveTools32 using a Remote I/O pass thru connection).

Do not use the 230.4k baud rate if your module firmware is 3.04 or earlier and if your program uses block transfers. Use the 57.6k or 115.2k baud rate instead.

Figure 2.11 Remote I/O Baud Rate Switches

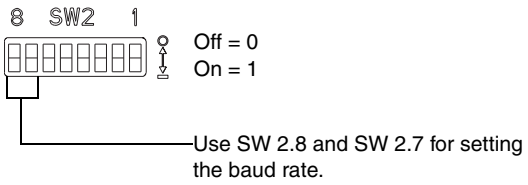

To change the baud rate, you need to:

1. Refer to the following table to determine settings for SW2.8 and SW2.7:

Baud Rate	Switch 2.8	SW2.7
57.6 K	0	0
115.2 K	0	1
230.4 K	1	0

2. Slide the switches to their appropriate positions.

Settings take effect when a module or board first receives power. When you change a setting, you must remove and then reapply power for the new setting to take effect.

Artisan Scientific - Quality Instrumentation ... Guaranteed | (888) 88-SOURCE | www.artisan-scientific.com

Setting Switches on SW1

Setting the Rack Address

DIP switches 8 through 3 on SW 1 set the rack address for the Remote I/O module. Each Remote I/O device must have a rack address that the controller can recognize. Each rack contains 8 words.

Important: When using a PLC-2 family processor, add 1 to the rack number set on the Remote I/O module DIP switches to your PLC code. The PLC-2 cannot have a Remote I/O rack numbered zero, so add a value of one to the rack number value when writing your PLC code.

Figure 2.12 Rack Address Switches

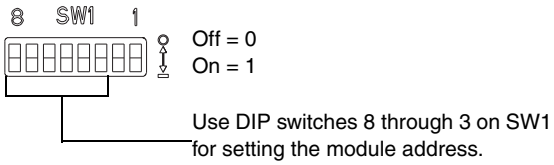

To edit the rack address, you need to:

1. Refer to the following table to determine the settings for SW1.8 through SW1.3:

Address		Switch Setting	Address		Switch Setting	Address		Switch Setting	Address		Switch Setting
Decimal	Octal	8 <---- 3	Decimal	Octal	8 <---- 3	Decimal	Octal	8 <---- 3	Decimal	Octal	8 <---- 3
0	0	111111	16	20	111101	32	40	111110	48	60	111100
1	1	011111	17	21	011101	33	41	011110	49	61	011100
2	2	101111	18	22	101101	34	42	101110	50	62	101100
3	3	001111	19	23	001101	35	43	001110	51	63	001100
4	4	110111	20	24	110101	36	44	110110	52	64	110100
5	5	010111	21	25	010101	37	45	010110	53	65	010100
6	6	100111	22	26	100101	38	46	100110	54	66	100100
7	7	000111	23	27	000101	39	47	000110	55	67	000100
8	10	111011	24	30	111001	40	50	111010	56	70	111000
9	11	011011	25	31	011001	41	51	011010	57	71	011000
10	12	101011	26	32	101001	42	52	101010	58	72	101000
11	13	001011	27	33	001001	43	53	001010	59	73	001000
12	14	110011	28	34	110001	44	54	110010	60	74	110000
13	15	010011	29	35	010001	45	55	010010	61	75	010000
14	16	100011	30	36	100001	46	56	100010	62	76	100000
15	17	000011	31	37	000001	47	57	000010	63	77	000000

Important: Not all controllers support all of these node addresses. Refer to the documentation for your controller. The maximum number of devices on a Remote I/O link is 32.

2. Slide the switches to their appropriate positions.

Settings take effect when a module or board first receives power. When you change a setting, you must remove and then reapply power for the new setting to take effect.

Artisan Scientific - Quality Instrumentation ... Guaranteed | (888) 88-SOURCE | www.artisan-scientific.com

Artisan Scientific - Quality Instrumentation ... Guaranteed | (888) 88-SOURCE | www.artisan-scientific.com

Installing the Module

Chapter Objectives

Chapter 3 provides the information that you need to install the module (1203-GD1 module, 1203-GK1 module, or 1336-GM1 board). In this chapter, you will read about the following:

- Selecting cables.
- Selecting a termination resistor.
- Installing a 1203-GD1 or 1203-GK1 module.
- Installing a 1336-GM1 board.

Selecting Cables

Refer to the following table to determine the required cables:

If Installing:	Required Cables
1203-GD1, 1203-GK1	SCANport and Remote I/O
1336-GM1	Remote I/O

SCANport Cables

When selecting the SCANport cable to connect a module to the SCANport product, you need to:

- Use an Allen-Bradley SCANport cable. Refer to the table below:

Male to Male Connection		Male to Female Connection①	
Length	Catalog Number	Length	Catalog Number
1/3 m	1202-C03	1/3 m	1202-H03
1 m	1202-C10	1 m	1202-H10
3 m	1202-C30	3 m	1202-H30
9 m	1202-C90	9 m	1202-H90

① Cables with male to female connections are generally used as extension cables.

- Use 10 meters (33 feet) or less of cable between the SCANport product and all peripherals.
- Keep SCANport cables away from high power cables to guard against introducing noise into your system.

Important: SCANport cables lock into a connection. To remove a SCANport cable, you must push it in and then pull it out.

Artisan Scientific - Quality Instrumentation ... Guaranteed | (888) 88-SOURCE | www.artisan-scientific.com

Remote I/O Cables

Remote I/O communications modules are connected to Remote I/O links with twinaxial cable used for Remote I/O and Data Highway Plus (DH+) communications. When selecting a cable, remember the following:

- Only 1770-CD Belden #9463 is tested and approved for RIO and DH+ installations. Using other cables is at your own risk.
- The total cable length depends on the baud rate that you are using. Refer to the following table:

Baud Rate	Maximum Length
57.6 K	3,048 m (10,000 ft)
115.2 K	1524 m (5,000 ft)
230.4 K	762 m (2,500 ft)

- All three of the following conductors must be connected at each node.

Color	Description
Blue	1
Shield	SH
Clear	2

- Do not use a star topology. Only two cables may be connected at any wiring point. You can use a series topology and daisy-chain two wires at a point.

Selecting a Termination Resistor

You must terminate both ends of a Remote I/O link to ensure proper operation. This termination is required only at the ends of the physical cable. Each Remote I/O link should have exactly two termination resistors.

If the device that you connect is an end device on the Remote I/O link, it must be terminated. Refer to the following table to select a resistor.

Important: You must use an 82 ohm external termination resistor if the link is operating at 230.4 kbps.

Device	Description
Programmable Controller	Refer to its manual.
1336-GM1 (Using Jumpers)	Set J2 in position 1-2 for termination and 2-3 for no termination. Refer to Figure 3.8. The jumper enables a 150 ohm resistor①.
1203-GD1, 1203-GK1, or 1336-GM1 (Using an external termination resistor)	Connect a resistor between terminals 1 and 2 on the Remote I/O connector. Refer to Figure 3.4. Use an 82 ohm termination resistor unless a device requires a 150 ohm termination resistor①.

① The following scanners require 150 ohm termination resistors on the RIO link: 1771-SN, 1772-SD, 1772-SD2, 1775-SR, 1775-S4A, 1775-S4B, 6008-SQH1, and 6008-SQH.

The following adapters require a 150 ohm termination resistors on the RIO link: 1771-AS, 1772-ASB (Series A), 1771-DCM.

The following devices require a 150 ohm termination resistors on the RIO link: 1771-AF.

Artisan Scientific - Quality Instrumentation ... Guaranteed | (888) 88-SOURCE | www.artisan-scientific.com

Installing a 1203-GD1 or 1203-GK1 Module

Required Tools and Equipment

To install your module, you need the following tools and equipment:

- Remote I/O communications module (1203-GD1 or 1203-GK1).
- 35 x 7.5 mm DIN rail.
- Appropriate cables for SCANport and Remote I/O connections. Refer to the “Selecting Cables” section in this chapter.
- Termination resistor (if necessary). Refer to the “Selecting a Termination Resistor” section in this chapter.
- 115 V/230 V AC or 24 V DC power supply.

Installing the 1203-GD1 or 1203-GK1 Module

1. Remove power from the Remote I/O link.
2. Hook the top lip of the module DIN rail mount onto the top of the DIN rail and then rotate the module onto the DIN rail. It snaps into a locked position.

Figure 3.1 Mounting a Module onto the DIN Rail

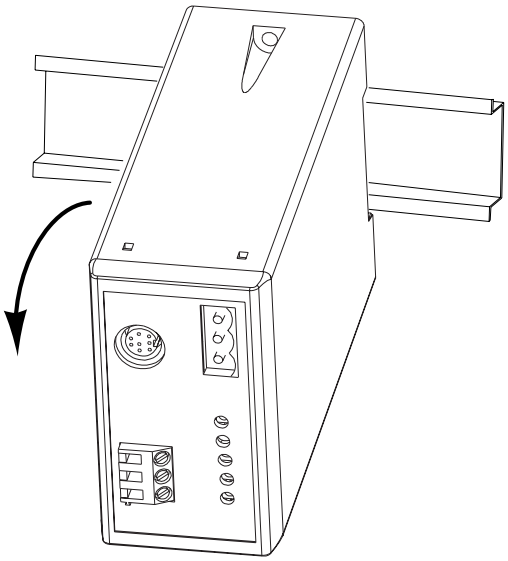

Artisan Scientific - Quality Instrumentation ... Guaranteed | (888) 88-SOURCE | www.artisan-scientific.com

3. Connect a SCANport cable (1202-Cxx) to a module and product.

Important: For the location of the SCANport connector on your product, refer to its user manual. If you are using a port expander, refer to its documentation.

Figure 3.2 Connecting the SCANport Cable

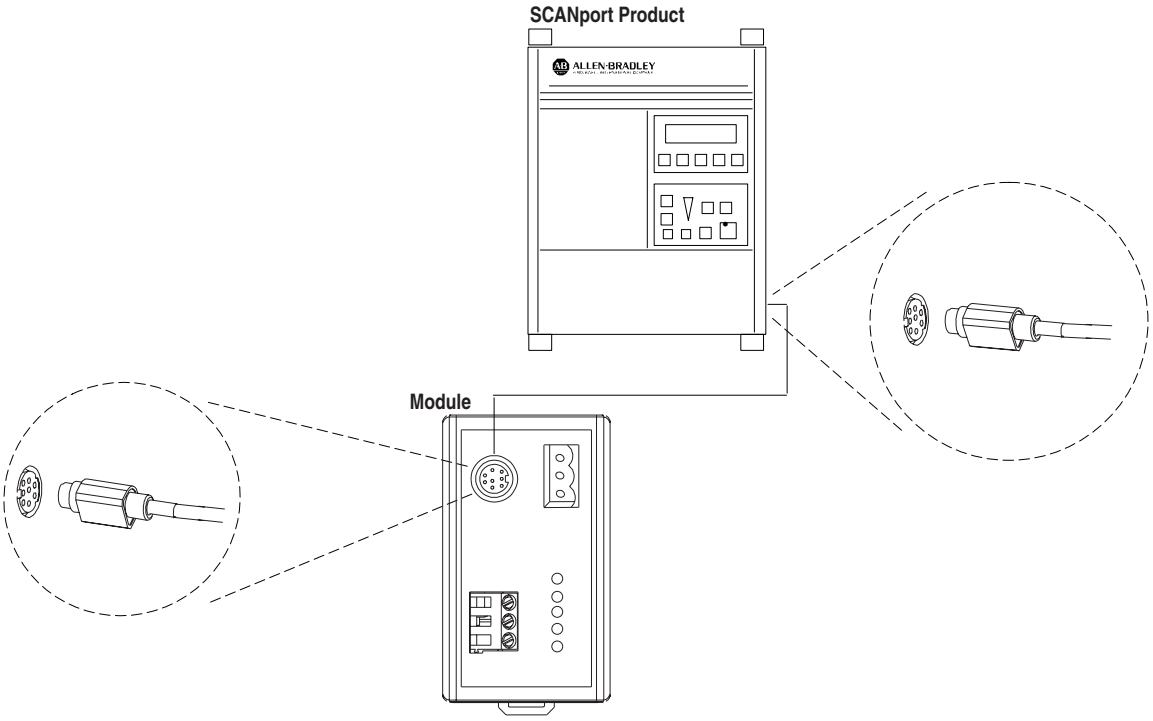

4. Connect a Remote I/O cable to the module and link or controller.

Figure 3.3 Connecting the Remote I/O Cable

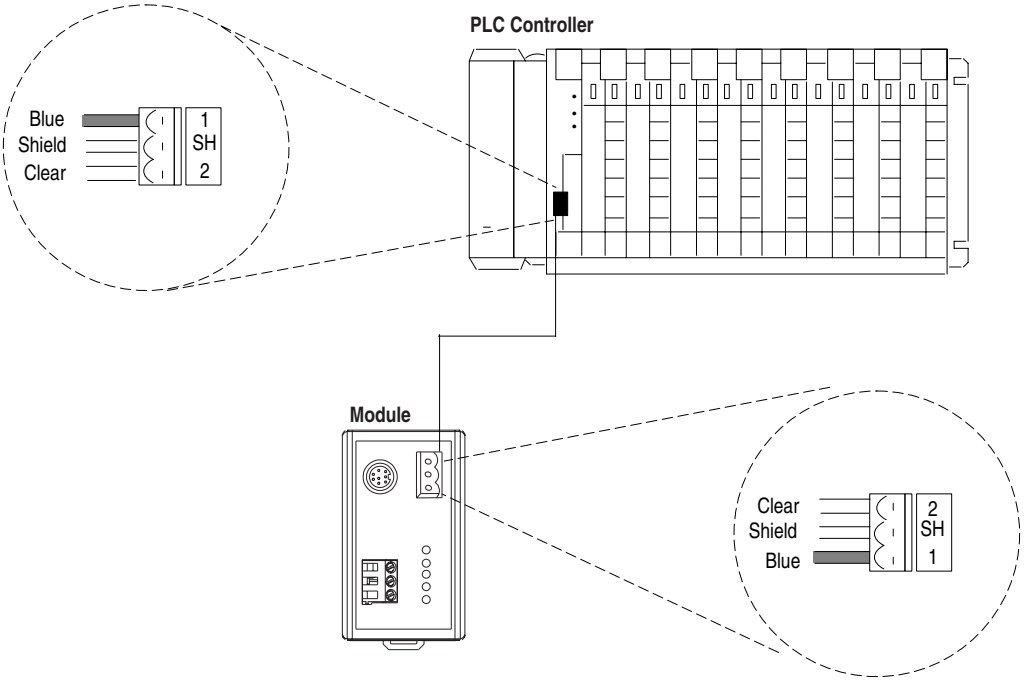

Artisan Scientific - Quality Instrumentation ... Guaranteed | (888) 88-SOURCE | www.artisan-scientific.com

5. If the module is the last device on the Remote I/O link, connect the termination resistor. If the Remote I/O link uses 230Kbps, you must use an 82 ohm termination resistor.

Figure 3.4 Connecting the Termination Resistor

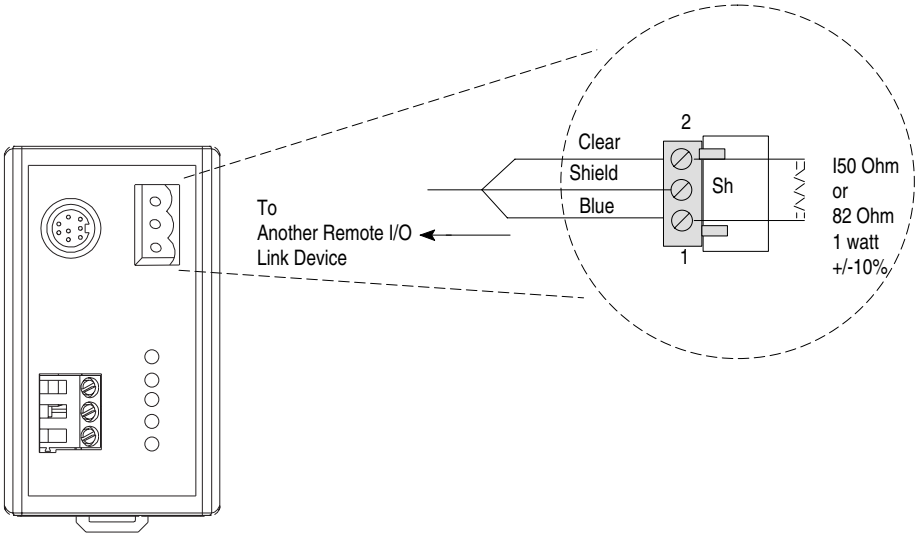

6. Connect the power supply to the module.

Figure 3.5 Connecting the Power Supply

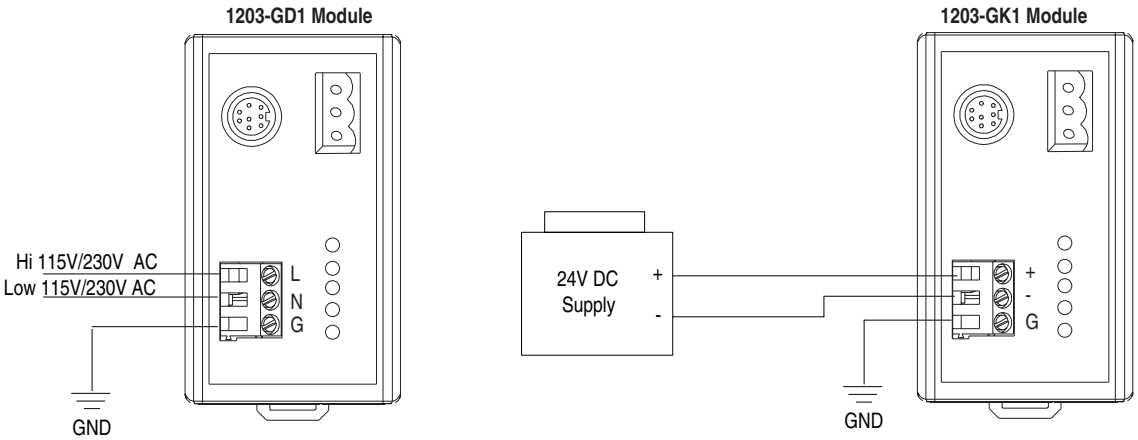

7. Apply power to the Remote I/O link. The module is now installed. Its LEDs are as follows:

LED	Status
Fault	Red (Blinking)
SCANport STS	Green or amber① ②
Health	Green or amber②
Rem I/O ACT	Off
Rem I/O STS	Off

① This LED is off if the module use firmware 2.xx or lower.

② Early versions of the module use amber LEDs.

You are now ready to create a ladder logic program.

Important: If your LEDs are different, refer to Chapter 6.

Artisan Scientific - Quality Instrumentation ... Guaranteed | (888) 88-SOURCE | www.artisan-scientific.com

Installing a 1336-GM1 Board

Required Tools and Equipment

To install your 1336-GM1 board, you need the following tools and equipment:

- Remote I/O communications board (1336-GM1).
- A kit that includes one grounding wrist strap, four Phillips mounting screws, four stand-off nylon headers, and one snap-in comm housing with mounting instructions (supplied with board).
- #1 Phillips screwdriver.
- Appropriate cable for the Remote I/O connection. Refer to the "Selecting Cables" section in this chapter.

Installing the 1336-GM1 Communications Board

The following instructions explain how to physically install a Remote I/O communications board.

ATTENTION: The 1336-GM1 communications board contains ESD (Electrostatic Discharge) sensitive parts. Static control precautions are required when installing, testing, or servicing this board. Device malfunction may occur if you do not follow ESD control procedures. If you are not familiar with static control procedures, refer to Rockwell Automation Publication 8000-4.5.2, *Guarding Against Electrostatic Damage*, or other applicable ESD protection handbook.

ATTENTION: Remove all power from the SCANport product before installing the 1336-GM1 board. Failure to disconnect power may result in death or serious injury. Verify all power is removed before installing the 1336-GM1 board.

Important: If you are attaching the communications board to a 1336 PLUS II, refer to the one-page insert included with the kit for mounting instructions.

1. Remove power from the SCANport product, and verify that it is not holding power.
2. Remove power from the Remote I/O link.
3. Put on the grounding wrist strap.

Artisan Scientific - Quality Instrumentation ... Guaranteed | (888) 88-SOURCE | www.artisan-scientific.com

4. Screw the four stand-off nylon headers into the appropriate spaces on the drive main control board.

Figure 3.6 Mounting the Open Style Communications Board

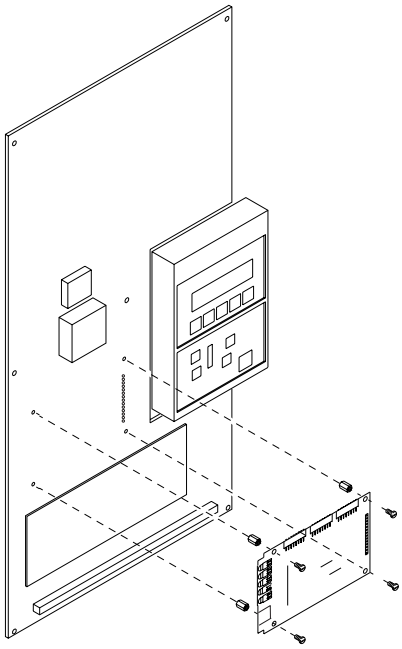

5. Insert the SCANport connector into the 14-pin SCANport header on the control board. The DIP switches should be facing you.
6. Screw the board securely into place, being careful not to overtighten the four screws.
7. Connect the Remote I/O cable.

Figure 3.7 Connecting the Remote I/O Cable

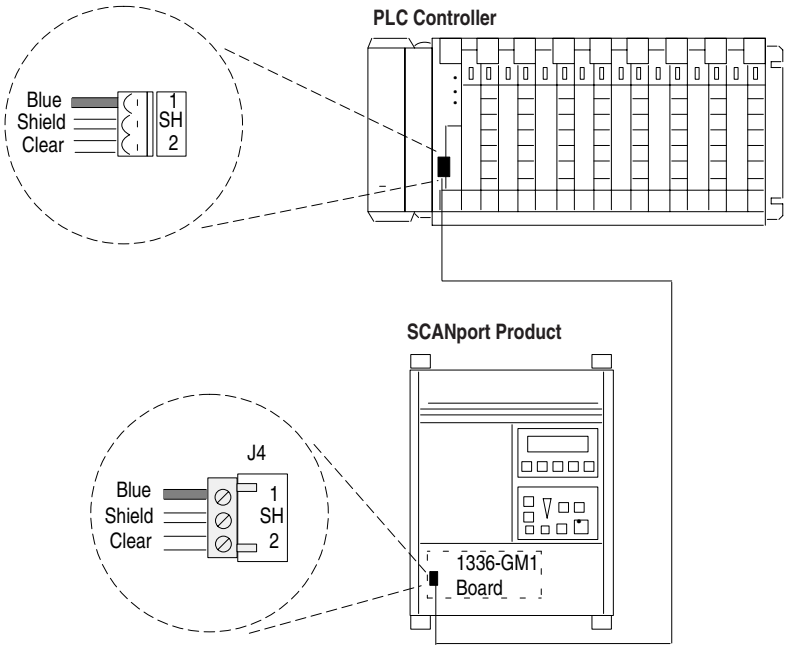

Artisan Scientific - Quality Instrumentation ... Guaranteed | (888) 88-SOURCE | www.artisan-scientific.com

8. If the module is the last device on the Remote I/O link, either user the internal termination resistor (J2) or an external termination resistor. If the Remote I/O link uses 230Kbps, you must use an external 82 ohm termination resistor.

Important: Use only one type of termination (internal or external),

Figure 3.8 Using a Termination Resistor

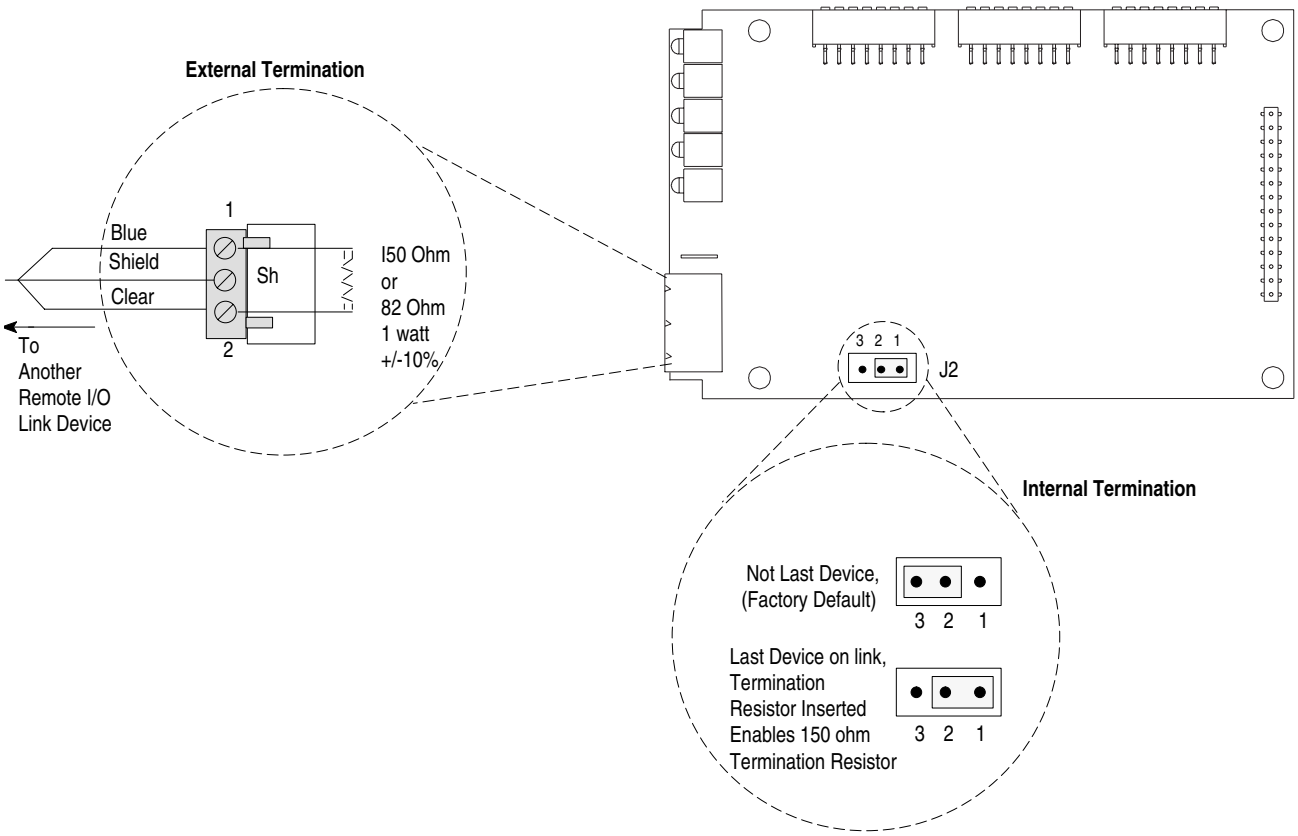

9. Reapply power to the SCANport product.

10. Apply power to the Remote I/O link. The module is now installed. Its LEDs are as follows:

LED	Status
Fault	Red (Blinking)
SCANport STS	Green or amber① ②
Health	Green or amber②
Rem I/O ACT	Off
Rem I/O STS	Off

① This LED is off if the module use firmware 2.xx or lower.

② Early versions of the module use amber LEDs.

You are now ready to create a ladder logic program.

Important: If your LEDs are different, refer to Chapter 6.

Artisan Scientific - Quality Instrumentation ... Guaranteed | (888) 88-SOURCE | www.artisan-scientific.com

Creating Ladder Logic Programs

Chapter Objectives

Chapter 4 provides information about ladder logic programs for products connected to a Remote I/O communications module. In this chapter, you will read about the following:

- I/O image table.
- Control Features.
- Datalinks.
- Example ladder logic programs for PLC, SLC, and Logix5550 controllers.

ATTENTION: When you configure a system for the first time, you should disconnect the motor from the machine or the process during the initial testing.

ATTENTION: The configurations and program examples shown in this manual are intended solely for purposes of example. Since there are many variables and requirements associated with any particular installation, Rockwell Automation does not assume responsibility or liability (to include intellectual property liability) for actual use based upon the examples shown in this publication.

Understanding the I/O Image Table

The Remote I/O communications module allows a SCANport product to look and act like a Remote I/O chassis when connected to a programmable controller. Data contained in the input/output image table is transferred between the programmable controller by the Remote I/O scanner, the same as with any Remote I/O chassis. You control the location of data transferred by setting the rack address and starting group. You control the amount of data by setting the DIP switches on SW3.

Important: The communications module does not scale the data that is transferred. Consequently, all scaling of the data must be done in the controller. Refer to the user manual for your SCANport product for details on device units.

Important: The Remote I/O to SCANport conversion is asynchronous. Data sent to the adapter for transfer to the drive must be maintained until the drive has received data.

Artisan Scientific - Quality Instrumentation ... Guaranteed | (888) 88-SOURCE | www.artisan-scientific.com

DIP switches on SW3 determine how the data contained in the programmable controller I/O image table is used in the drive. Figure 4.1 shows an I/O image table.

Figure 4.1 I/O Image Table

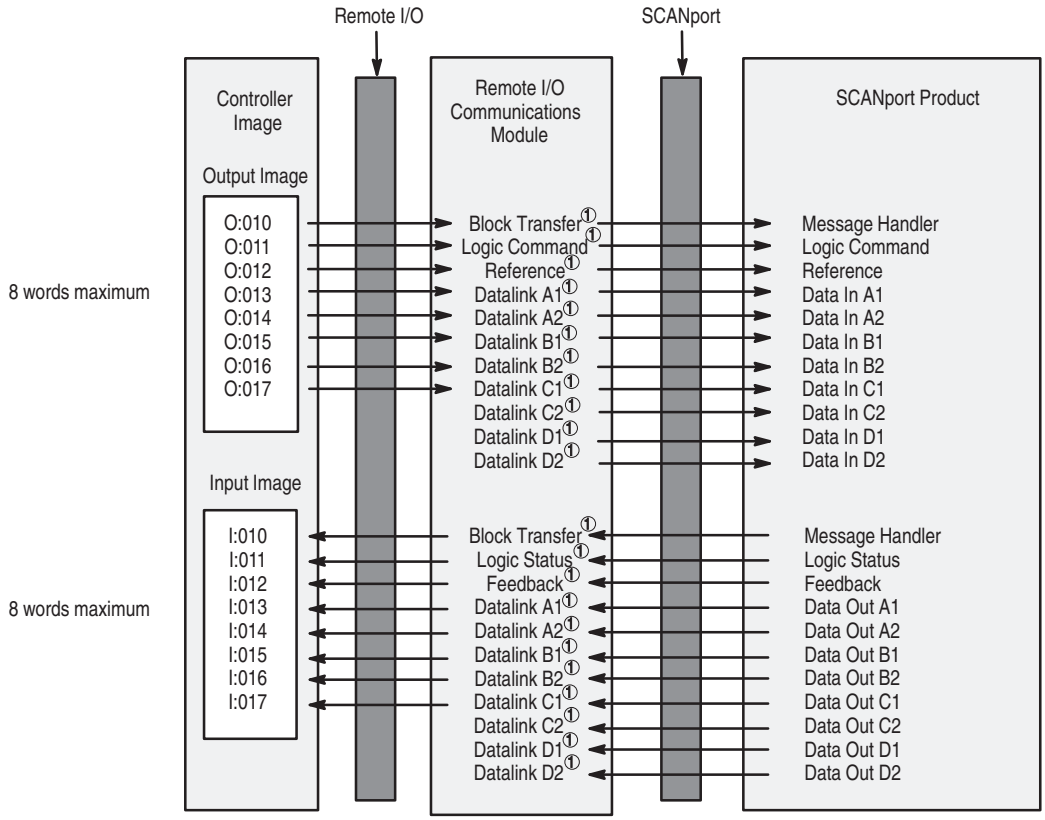

① Optionally enabled using DIP switches on the module. Refer to Chapter 2.

Control Features

SW 3.1 through SW 3.3 select the basic control features: Block Transfer, Logic Command/Status, and Reference/Feedback. When enabled, each of these features adds one word to the input I/O image table and one word to the output I/O image table.

Datalinks

SW 3.4 through SW 3.8 enable or disable the datalinks.

Description

A datalink is a type of pointer used by some SCANport products to transfer data to and from the controller. Datalinks allow a parameter value to be changed without using a block transfer message. When enabled, each datalink consumes two 16-bit words in both the input and output image table of the controller. When SW3.8 is ON, the last datalink is truncated so that it uses only one word in the input and output image table.

Artisan Scientific - Quality Instrumentation ... Guaranteed | (888) 88-SOURCE | www.artisan-scientific.com

Products That Support Datalinks

To use datalinks, your SCANport product must support them. Refer to your product user manual.

Using Datalinks

The following are the rules for using datalinks:

- Normally, each enabled datalink reserves two words in both the input and output image tables of the controller. This increases your I/O image size. The starting module group on the module must be set to support the size of the I/O image table. Truncation can be used to minimize the required rack size used by the Remote I/O module. Refer to Chapter 2.
- Each set of datalink parameters in a SCANport product can be used by only one communications module. If more than one module is connected to a single SCANport product, they must not attempt to use the same datalink.
- Parameter settings in the SCANport product determine the data passed through the datalink mechanism. Refer to the user manual for your SCANport product for more information.
- When you use a datalink to change a value, the value is not written to the EEPROM. The value is stored in volatile memory and lost when the drive loses power.
- The 1336 FORCE and 1336 IMPACT drives use datalinks in a special way. Refer to their user manuals for information.

Example Application 1

The simplest application of datalinks is to set a parameter number into a Data In parameter. The controller output image table word connected to this datalink will then control the value of the parameter set into the Data In parameter.

For example, to change the value of parameter 27 in a 1336 PLUS drive, you need to:

1. In the 1336 PLUS drive, set parameter 111 (Data In A1) to 27.
2. On the communications module, slide SW 3.4 to ON. See Figure 2.6.
3. If your communications module is configured like Figure 4.1, word 3 (fourth word) in the output image will be the value that parameter 27 uses. This value is stored in volatile memory and lost when the drive loses power.

Artisan Scientific - Quality Instrumentation ... Guaranteed | (888) 88-SOURCE | www.artisan-scientific.com

Example Application 2

Another application for datalinks is to set a parameter into a Data Out parameter. The controller input image table word connected to this datalink will then receive the value of the parameter programmed into the Data Out parameter.

For example, to monitor the value of parameter 27 in a 1336 PLUS drive, you need to:

1. In the 1336 PLUS drive, set parameter 119 (Data Out A1) to 27.
2. On the module, slide SW 3.4 to ON. See Figure 2.6.
3. If your communications module is configured like Figure 4.1, word 3 (fourth word) in the input image would receive the value of parameter 27.

Example Application 3

A third application for datalinks is to change multiple parameters with only two datalinks enabled. During each scan, this application changes a parameter and then verifies that it has been changed.

For example, to change parameters 27, 28, and 29 in a 1336 PLUS drive, you need to:

1. In the 1336 PLUS drive, set the following parameters:

Parameter:	Setting
111 (Data In A1)	112
119 (Data Out A1)	112
113 (Data In B1)	120

2. On the module, slide SW 3.4 and SW 3.5 to ON to enable datalinks A and B (See Figure 2.6). Slide the other DIP switches on SW3 to OFF.

   A parameter number must be moved or copied into word 0 (first word) and word 2 (third word) of the output image for each scan. The new parameter value must be moved or copied into word 1 (second word) of the output image. In our example, we move the following data into the input image table:

Scan	Word 0 and 2	Word 1	Description
1	27	123	Parameter 27 will be set to 123.
2	28	456	Parameter 28 will be set to 456.
3	29	789	Parameter 29 will be set to 789.

   A successful scan yields the following results in word 0 and 1 in the input image table:

Scan	Word 0	Word 1	Description
1	27	123	Parameter 27 has been set to 123.
2	28	456	Parameter 28 has been set to 456.
3	29	789	Parameter 29 has been set to 789.

   Logic can be developed for the controller that uses the values in word 0 (first word) and word 1 (second word) of the input image to verify that the change was completed successfully.

Artisan Scientific - Quality Instrumentation ... Guaranteed | (888) 88-SOURCE | www.artisan-scientific.com

Figure 4.2 illustrates the first scan in Example Application 3.

Figure 4.2 Example Scan using Datalinks

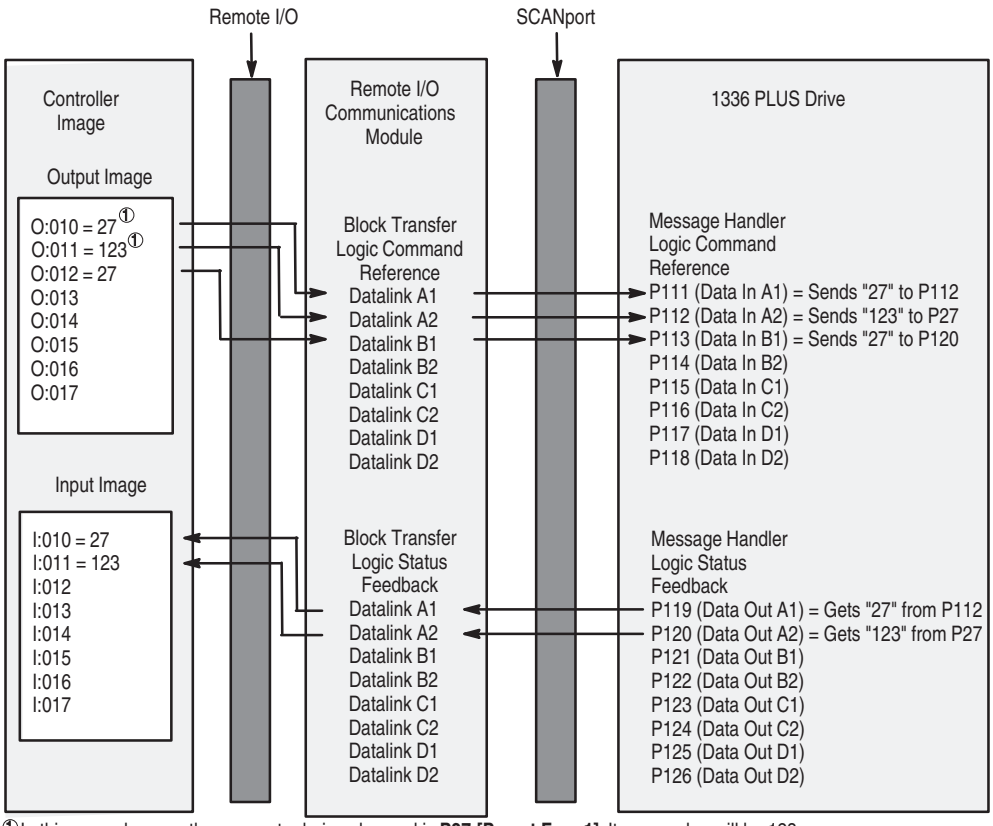

① In this example scan, the parameter being changed is **P27-[Preset Freq 1]**. Its new value will be 123.

Settings for the Ladder Logic Program Examples

The example ladder logic programs in this manual use the following settings.

Remote I/O Communications Module Settings

The Remote I/O module used for examples in this manual is connected to a 1336 PLUS drive. It is configured for the following:

- Rack Address = 2
- Rack Size = 1/2 Rack
- Starting Group = 0

DIP switches on SW3 are set as follows:

Switch	Settings 8 ---> 1	Description
8 SW3 1 Off = 0 On = 1	00001110	Logic command/status, reference/ feedback, and datalink A are enabled. All other features are disabled.

Artisan Scientific - Quality Instrumentation ... Guaranteed | (888) 88-SOURCE | www.artisan-scientific.com

SCANport Product Settings

Logic Command bits

In our example, we are using a 1336 PLUS drive. The Logic Command bits for it are:

Logic Command Bits																	
15	14	13	12	11	10	9	8	7	6	5	4	3	2	1	0	Function	Description
															X	Stop①	1=Stop, 0=No Operation
														X		Start	1=Start, 0=No Operation
													X			Jog	1=Jog, 0=No Operation
												X				Clear Faults	1=Clear, 0=No Operation
										X	X					Direction	00=No Operation, 01=Forward, 10=Reverse
									X							Local	1=Local, 0=Multiplexed
								X								MOP Increment	1=Increment MOP, 0=No Operation
						X	X									Accel Rate Select	00=No Operation, 01=Rate 1, 10=Rate 2
				X	X											Decel Rate Select	00=No Operation, 01=Rate 1, 10=Rate 2
	X	X	X													Reference Selection	000=No Operation 001=External Reference 1 (Par 5) 010=External Reference 2 (Par 6) 011=Preset 3 100=Preset 4 101=Preset 5 110=Preset 6 111=Preset 7
X																MOP Decrement	1=Decrement MOP, 0=No Operation

① Asserting a 1 will stop the product.

The 1305 drives, 1336 PLUS II drives, and 1336 Spider drives use the same Logic Command and Logic Status data. For other drives, refer to their user manuals.

Artisan Scientific - Quality Instrumentation ... Guaranteed | (888) 88-SOURCE | www.artisan-scientific.com

Logic Status Bits

The Logic Status bits for the 1336 PLUS drive that we use in our example are as follows:

Logic Status Bits																	
15	14	13	12	11	10	9	8	7	6	5	4	3	2	1	0	Function	Description
															X	Enabled	1=Enabled, 0=Not Enabled
														X		Running	1=Running, 0=Not Running
													X			Command Direction	1=Forward, 0=Reverse
												X				Rotating Direction	1=Forward, 0=Reverse
											X					Acceleration	1=Accelerating, 0=Not
										X						Deceleration	1=Decelerating, 0=Not
									X							Warning	1=Warning Present, 0=Not
								X								Fault	1=Faulted, 0=Not Faulted
							X									At Speed	1=At Speed, 0=Not At Speed
				X	X	X										Local	000=Terminal I/O has Local 001=Port 1 has Local 010=Port 2 has Local 011=Port 3 has Local 100=Port 4 has Local 101=Port 5 has Local 110=Port 6 has Local 111=Multiplexed Control
X	X	X	X													Reference Source	0000=External Reference 1 0001 – 0111=Presets 1 – 7 1000=External Reference 2 1001 – 1110=Port 1 – 6 Direction 1111=Jog

The 1305 drives, 1336 PLUS II drives, and 1336 Spider drives use the same Logic Command and Logic Status data. For other drives, refer to their user manuals.

Artisan Scientific - Quality Instrumentation ... Guaranteed | (888) 88-SOURCE | www.artisan-scientific.com

Example PLC Ladder Logic Program

Refer to page 4–5 for the settings of the module and the 1336 PLUS drive used for this example.

Figure 4.3 Example Ladder Logic Program for a PLC

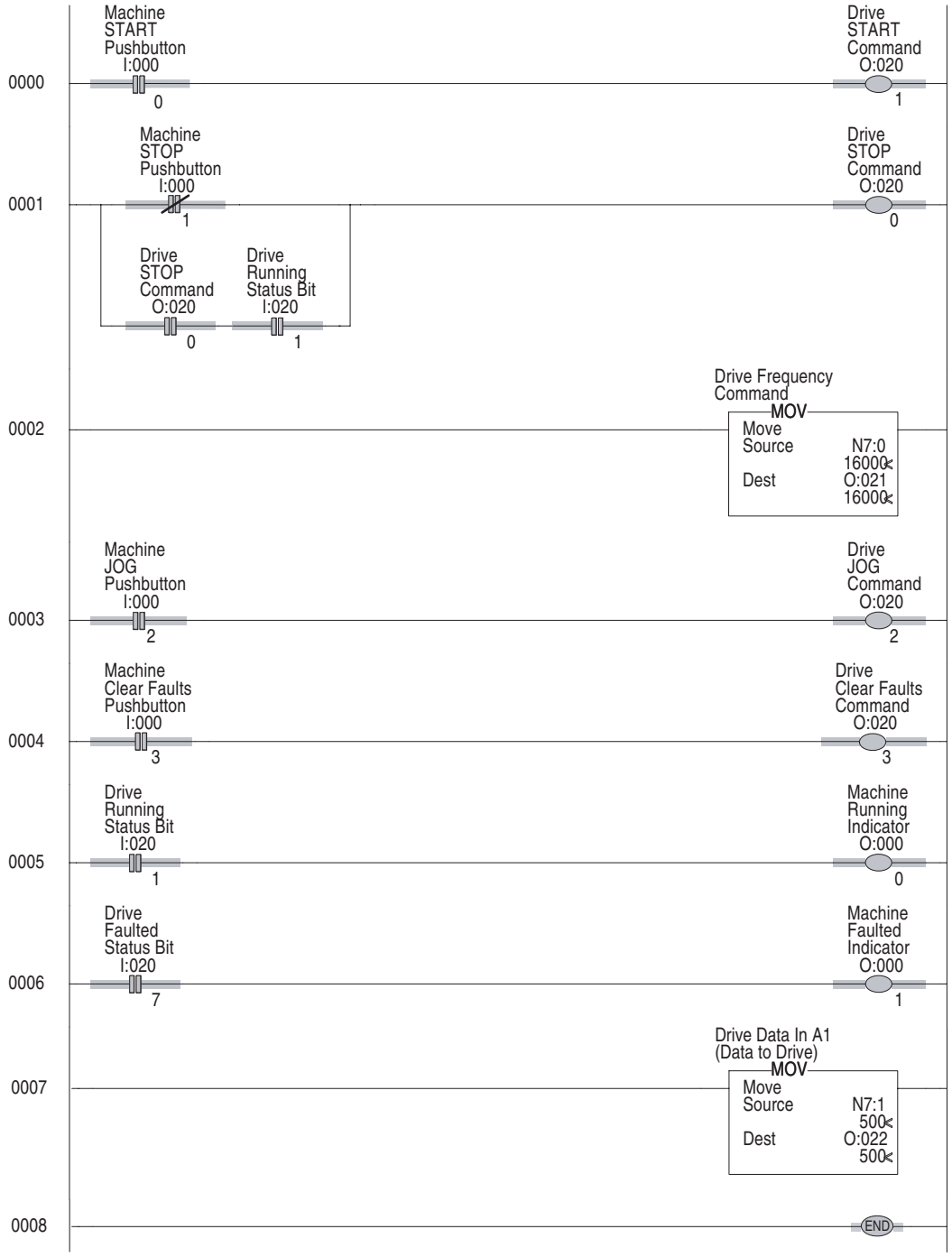

Artisan Scientific - Quality Instrumentation ... Guaranteed | (888) 88-SOURCE | www.artisan-scientific.com

About the PLC Ladder Logic Program

Rung	Description
0001	When the machine Start push button is pressed, the PLC sends a START command to the drive. The drive will start if no STOP command is being sent by the PLC or any other control device. (Start button is a normally open contact in this example.) SCANport products will start only if the start bit transitions high while the stop bit is already low. The address (O:020) is determined by the rack and starting group settings on the module. In the example, we use rack 02 and starting group module word 0.
0002	When the machine Stop push button is pressed, the PLC sends a STOP command to the drive. (Stop button is normally closed contact in this example)
0003	A frequency command is transferred from the PLC data table to the drive. A range of 0 to 32767 is equivalent to zero to maximum frequency. (In this example, the drive frequency select parameters are set to receive a frequency reference from the Remote I/O module.)
0004	When the machine Jog button is pressed, the PLC will send a JOG command to the drive. The drive will start and run at the programmed jog frequency if no STOP command is being sent by the PLC or other control device. (Jog button is normally open contact in this example.)
0005	When the machine Clear Faults push button is pressed, the PLC sends a CLEAR FAULTS command to the drive. (Clear Faults button is a momentary normally open contact in this example.)
0006	When the drive is running, the PLC will receive a Drive Running status bit.
0007	When the drive is faulted, the PLC will receive a Drive Faulted status bit.
0008	A value is moved from the PLC data table into the drive parameter specified by the Data In A1 parameter in the drive.

Artisan Scientific - Quality Instrumentation ... Guaranteed | (888) 88-SOURCE | www.artisan-scientific.com

Example SLC Ladder Logic Program

Refer to page 4–5 for the settings of the module and the 1336 PLUS drive used for this example.

Figure 4.4 Example Ladder Logic Program for an SLC

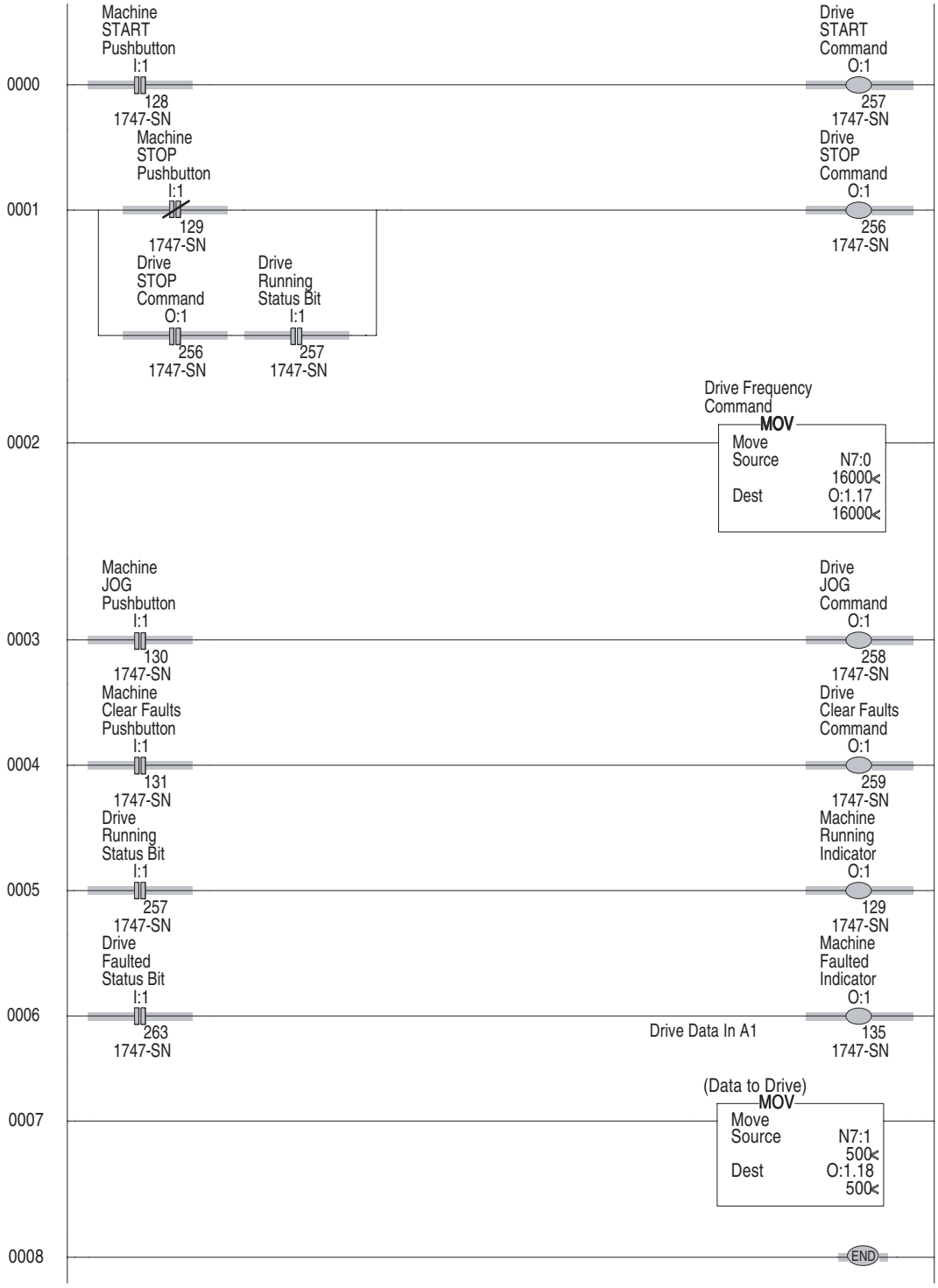

Artisan Scientific - Quality Instrumentation ... Guaranteed | (888) 88-SOURCE | www.artisan-scientific.com

About the SLC Ladder Logic Program

Rung	Description
0001	When the machine Start push button is pressed, the SLC sends a START command to the drive. The drive will start if no STOP command is being sent by the SLC or any other control device. (Start button is a normally open contact in this example.) SCANport products will start only if the start bit transitions high while the stop bit is already low. The address (O:1) is determined by the slot and word. It is displayed as a continuous bit number. In the example, we use rack 02 and starting group module word 0.
0002	When the machine Stop push button is pressed, the SLC sends a STOP command to the drive. (Stop button is normally closed contact in this example)
0003	A frequency command is transferred from the SLC data table to the drive. A range of 0 to 32767 is equivalent to zero to maximum frequency. (In this example, the drive frequency select parameters are set to receive a frequency reference from the Remote I/O module.)
0004	When the machine Jog button is pressed, the SLC will send a JOG command to the drive. The drive will start and run at the programmed jog frequency if no STOP command is being sent by the SLC or other control device. (Jog button is normally open contact in this example.)
0005	When the machine Clear Faults push button is pressed, the PLC sends a CLEAR FAULTS command to the drive. (Clear Faults button is a momentary normally open contact in this example.)
0006	When the drive is running, the SLC will receive a Drive Running status bit.
0007	When the drive is faulted, the SLC will receive a Drive Faulted status bit.
0008	A value is moved from the SLC data table into the drive parameter specified by the Data In A1 parameter in the drive.

About the SLC Display

When you are creating an SLC ladder logic program, you can display information by slot and bit or by slot, word, and bit.

Figure 4.5 SLC Displays

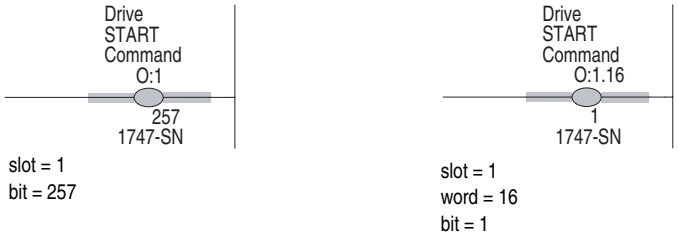

Artisan Scientific - Quality Instrumentation ... Guaranteed | (888) 88-SOURCE | www.artisan-scientific.com

Example Logix5550 Ladder Logic Program

Refer to page 4–5 for the settings of the module and the 1336 PLUS drive used for this example.

Figure 4.6 Example Ladder Logic Program for a Logix5550

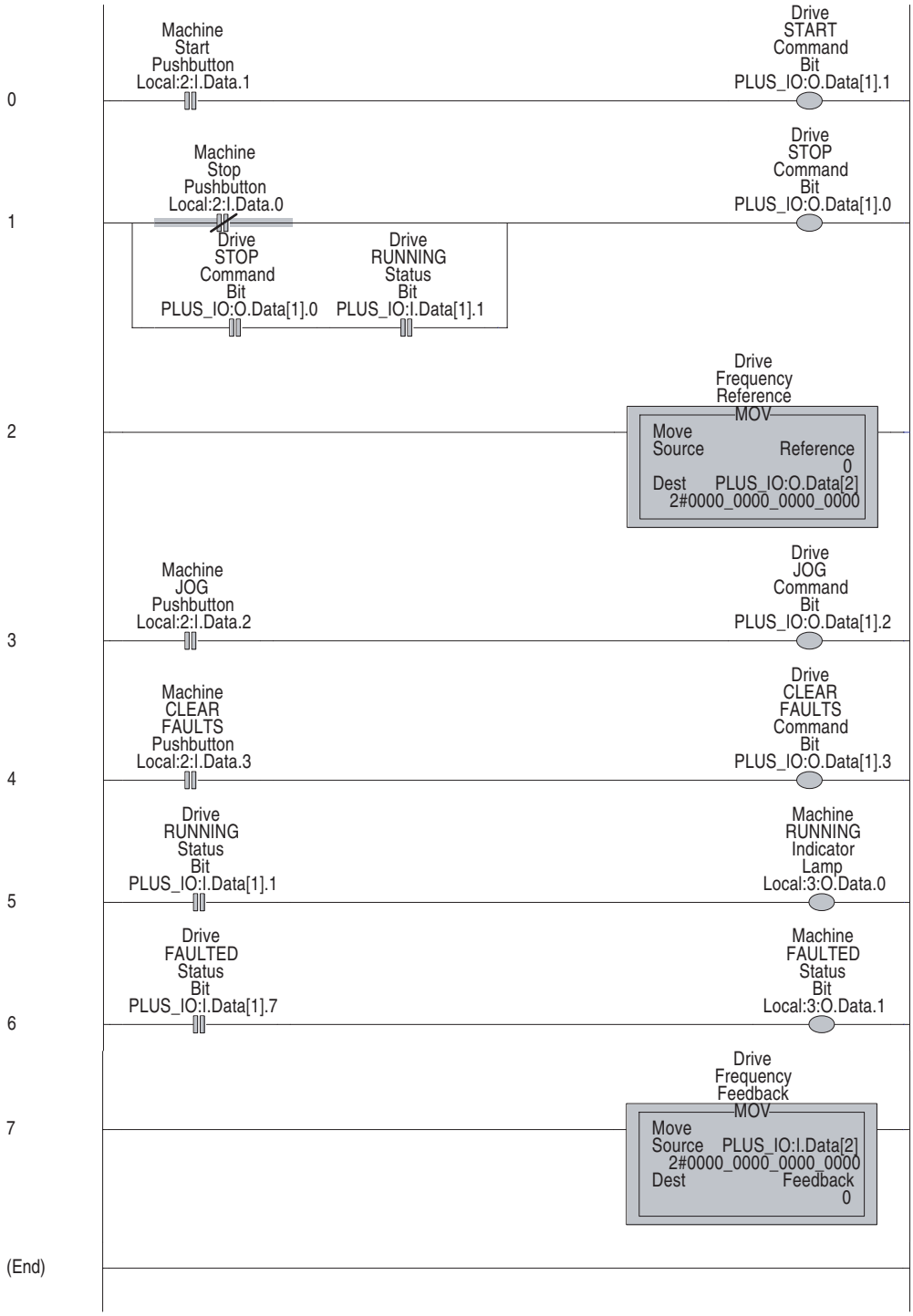

Artisan Scientific - Quality Instrumentation ... Guaranteed | (888) 88-SOURCE | www.artisan-scientific.com

About the Logix5550 Ladder Logic Program

Rung	Description
0001	When the machine Start push button is pressed, the Logix5550 sends a START command to the drive. The drive will start if no STOP command is being sent by the Logix5550 or any other control device. (Start button is a normally open contact in this example.) SCANport products will start only if the start bit transitions high while the stop bit is already low. In the example, we use rack 02 and starting group module word 0. The tags are configured to represent this address.
0002	When the machine Stop push button is pressed, the Logix5550 sends a STOP command to the drive. (Stop button is normally closed contact in this example)
0003	A frequency command is transferred from the Logix5550 data table to the drive. A range of 0 to 32767 is equivalent to zero to maximum frequency. (In this example, the drive frequency select parameters are set to receive a frequency reference from the Remote I/O module.)
0004	When the machine Jog button is pressed, the Logix5550 will send a JOG command to the drive. The drive will start and run at the programmed jog frequency if no STOP command is being sent by the Logix5550 or other control device. (Jog button is normally open contact in this example.)
0005	When the machine Clear Faults push button is pressed, the Logix5550 sends a CLEAR FAULTS command to the drive. (Clear Faults button is a momentary normally open contact in this example.)
0006	When the drive is running, the Logix5550 will receive a Drive Running status bit.
0007	When the drive is faulted, the Logix5550 will receive a Drive Faulted status bit.
0008	A value is moved from the Logix5550 data table into the drive parameter specified by the Data In A1 parameter in the drive.

Artisan Scientific - Quality Instrumentation ... Guaranteed | (888) 88-SOURCE | www.artisan-scientific.com

End of Chapter 4

Artisan Scientific - Quality Instrumentation ... Guaranteed | (888) 88-SOURCE | www.artisan-scientific.com

Using Block Transfer Messages

Chapter Objectives

Chapter 5 provides information about Block Transfer messages. In this chapter, you will read about the following:

- General information on block transfers.
- The Remote I/O status word.
- Data storage.
- Example ladder logic programs using Block Transfer messages.

ATTENTION: The sample programs and block transfer examples shown in this manual are intended solely for purposes of example. Since there are many variables and requirements associated with any particular installation, Rockwell Automation does not assume responsibility or liability (to include intellectual property liability) for actual use based upon the examples shown in this publication.

ATTENTION: Hazard of equipment damage exists. If block transfer messages are programmed to frequently write parameter data, the EEPROM (Non-Volatile Storage) will quickly exceed its life cycle and cause the product to malfunction. Do not create a program that frequently uses block transfer messages to write parameter data to a product. Datalinks do not write to the EEPROM and should be used for frequently changed parameters.

Understanding Block Transfer

Discrete transfer is the method used by a controller to transfer data to and from the module during every rack scan. The module transfers this data to and from the SCANport product.

Block transfer is the method used by a controller to transfer data that does not require continuous updates. To perform this function, the module provides a status word to the controller during the normal discrete transfer scan. This status word occupies the first module group (word) in the I/O image table for the designated rack (communications module). The status word is then used by the ladder program to control the controller Block Transfer Write (BTW) and Block Transfer Read (BTR) functions.

Important: The Remote I/O communications module does not scale or manipulate data that is transferred between the controller and SCANport product. The data in the controller must be converted to device units before being sent to the SCANport product.

Artisan Scientific - Quality Instrumentation ... Guaranteed | (888) 88-SOURCE | www.artisan-scientific.com

Understanding the Block Transfer Status Word

The block transfer status word is returned from the Remote I/O module. It is the first word associated with the rack in the controller input image table. This status word indicates the condition of the Remote I/O module itself and is not part of the standard block transfer instructions in the ladder program. Figure 5.1 details the individual bits.

Figure 5.1 Remote I/O Status Word

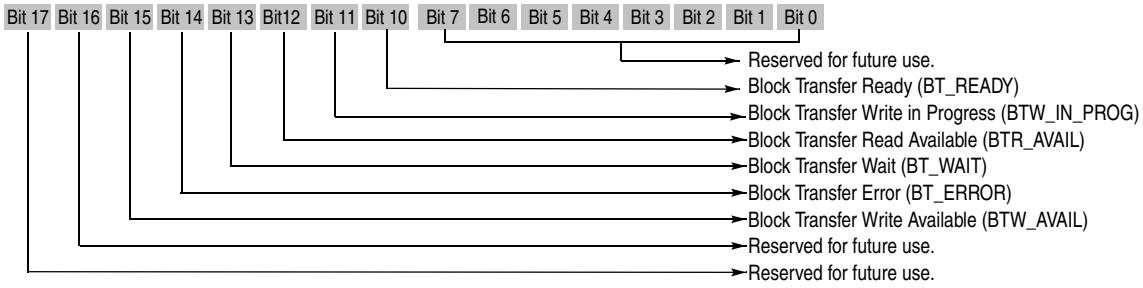

Status	Description
Block Transfer Ready	The SCANport product and Remote I/O module are communicating and are ready to process block transfers.
Block Transfer Write in Progress	A block transfer write is in progress between the controller and Remote I/O module. This bit is cleared when the data transfer to the module is complete.
Block Transfer Read Available	The Remote I/O module has data available for the controller to read.
Block Transfer Wait	The Remote I/O module is communicating with the SCANport product. This bit is cleared when the data transfer between the module and SCANport product is complete.
Block Transfer Error	An error has occurred during communications with the SCANport product, or the BTW data is invalid.
Block Transfer Write Available	The Remote I/O module is ready to receive a Block Transfer Write.

Figure 5.2 Bit Timing

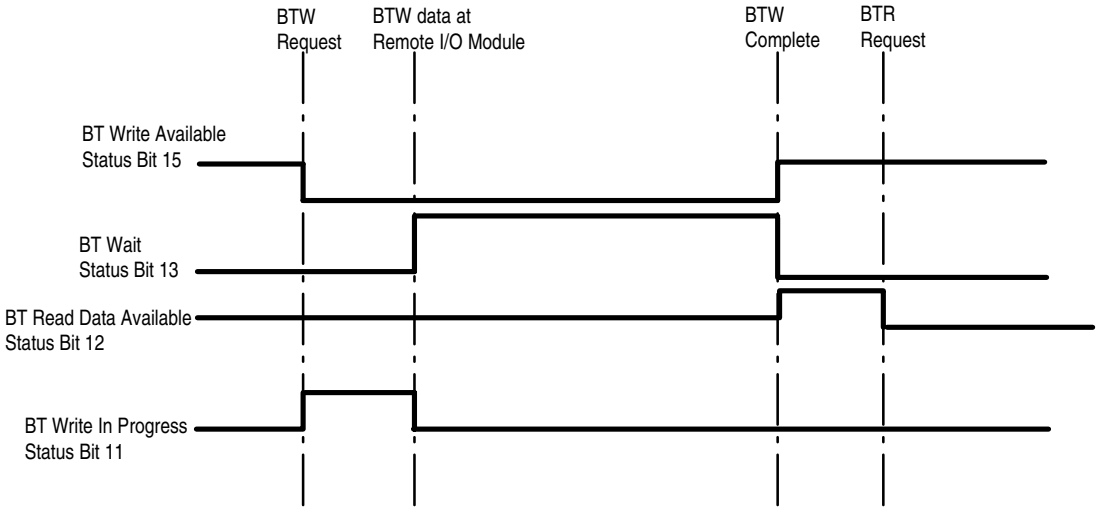

Artisan Scientific - Quality Instrumentation ... Guaranteed | (888) 88-SOURCE | www.artisan-scientific.com

Understanding Data Storage

In order to use the block transfer instructions in the ladder program, it is necessary to reserve several words for data storage. Some of these words are required for internal use by the block transfer function, and some contain the block transfer message information. Refer to Appendix B for detailed information on the required data in data files for different block transfer messages.

Example PLC Block Transfers

Figure 5.3 and Figure 5.4 are examples of block transfer programming from PLC controllers to a Remote I/O communications module. The BTW_AVAIL and BTR_AVAIL bits from the module status word (I:010 in these examples) are used in these examples. The examples also show how user logic can be used to enable or disable the block transfer operations.

Figure 5.3 Example for a PLC-5/15 or PLC-5/25

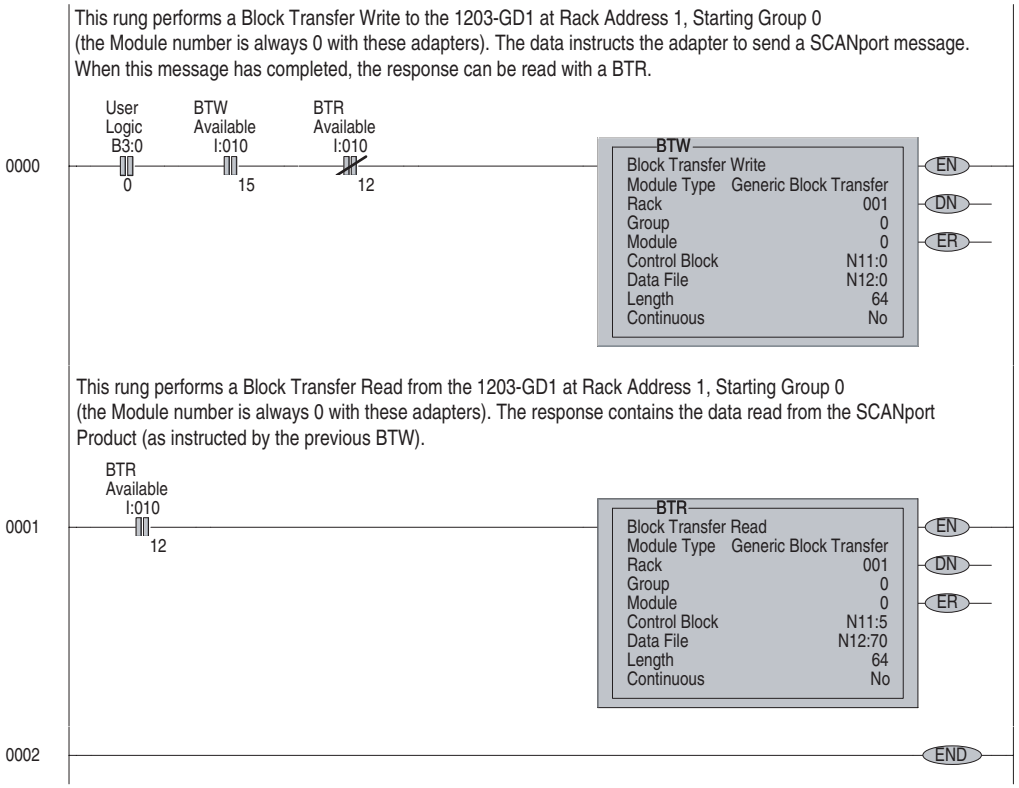

Artisan Scientific - Quality Instrumentation ... Guaranteed | (888) 88-SOURCE | www.artisan-scientific.com

Figure 5.4 Example for a PLC-5/20, PLC-5/40, PLC-5/60, PLC-5/80

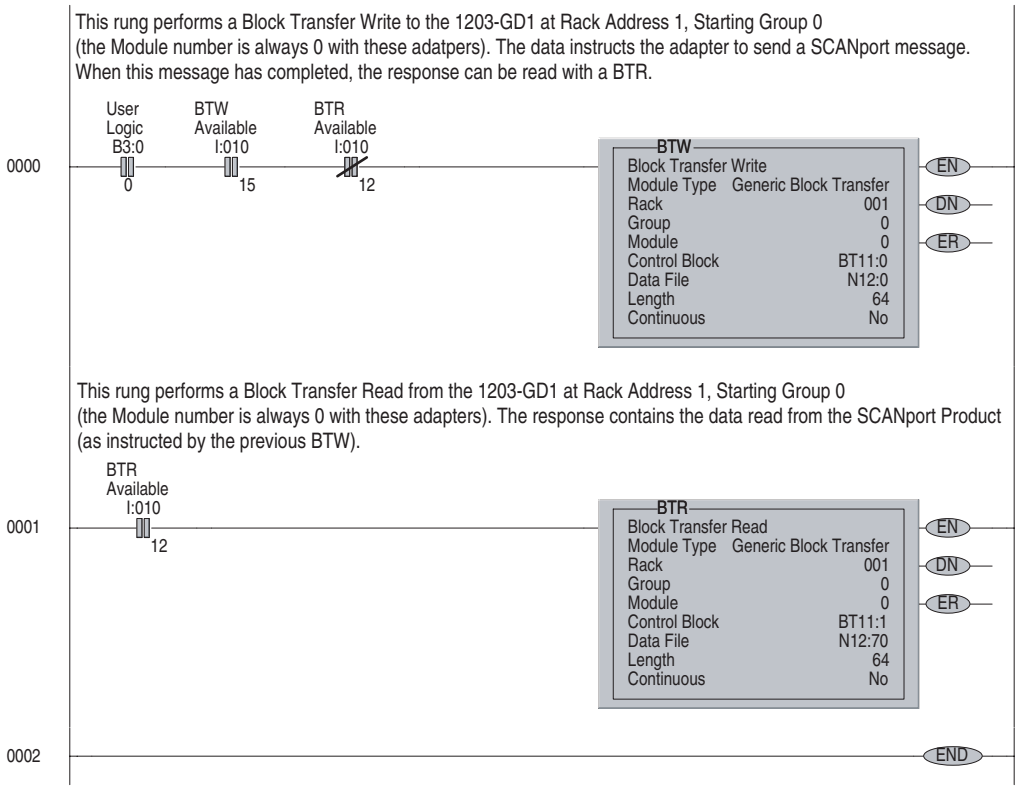

The following table defines the contents of the example PLC block transfer messages (Figure 5.3 and Figure 5.4).

Content	Description
Rack	The rack address is determined by the switch settings on the Remote I/O module. (Refer to Chapter 2.) In Figure 5.3 and Figure 5.4, rack address 1 is used.
Group	The group number is the first group in the rack associated with the Remote I/O module. This is called the starting group. It is determined by the size of the rack. (Refer to Chapter 2.) In Figure 5.3, the rack has been set up as a full 8 group rack; therefore, the starting group 0 is used.
Module	The module number is associated with the block transfer in the associated slot. This will always be 0.
Control Block	The control block is a predefined set of words that contain bit information associated with the block transfer function. In the PLC-5/15 and PLC-5/25, the control block requires 5 contiguous words. In the PLC 5/40 and 5/60 the control block may be either an integer type, and would require 5 contiguous words, or a block transfer type and would require 1 element. In Figure 5.3, words N11:0 through N11:4 have been reserved for the bit array in the BTW block. Words N11:5 through N11:9 have been reserved for the BTR block. In Figure 5.4, element BT11:0 has been reserved for the bit array in the BTW block. Element BT11:1 has been reserved for the BTR block.
Data File	The data file is the address of the message sent by the BTW or received by the BTR block. It contains both header and data information. The number of words required for the data file is dependent on the type of message being sent. Refer to Appendix B for information regarding the header and data that must be included in the data file for each message. In Figure 5.3 and Figure 5.4, N12:0 is the first word in the data file for the BTW block and N12:70 is the first word for the BTR block.
Length	Length specifies the length of the block transfer message in words. It varies depending on the type of message being sent. The BTW and BTR instruction lengths may be different. Refer to the message examples in Appendix B for the minimum lengths required for each message.
Continuous	Continuous specifies whether the block transfer block is to be executed continuously or only when the rung is true. This should always be set to No.

Artisan Scientific - Quality Instrumentation ... Guaranteed | (888) 88-SOURCE | www.artisan-scientific.com

Example SLC Block Transfers

Figure 5.5 and the following data file illustrate an example block transfer program from an SLC controller to a Remote I/O communications module. This program uses the first block transfer area in the scanner located in the first slot. It also uses data files N10 and B3.

The example data file contains the data needed to request a read full of parameter 78. The length of the block transfer data file is loaded into N10:1. The value 0 is loaded into N10:2 for the rack, group, slot address for the block transfer because this address is 0, 0, 0 (refer to page 5–7). Data for the BTW is loaded into N10:10. Once the data has been loaded, the user enabled bit B3:0/0 is set. When the block transfers have completed, the BTR data is copied into N10 starting at N10:100 and B3:0/0 is cleared by the program.

Figure 5.5. Example for an SLC-500

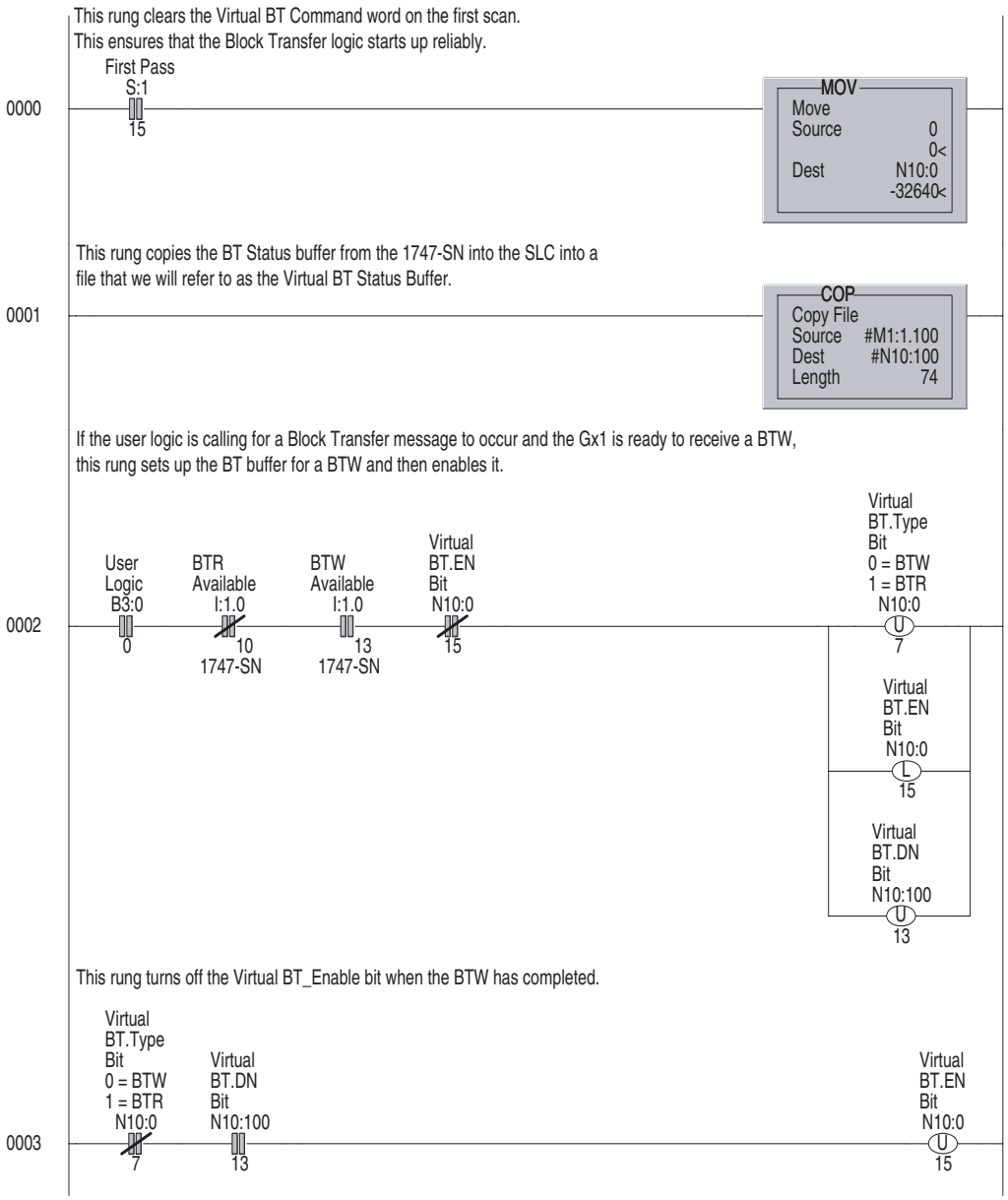

Artisan Scientific - Quality Instrumentation ... Guaranteed | (888) 88-SOURCE | www.artisan-scientific.com

Figure 5.5 SLC Block Transfer Continued

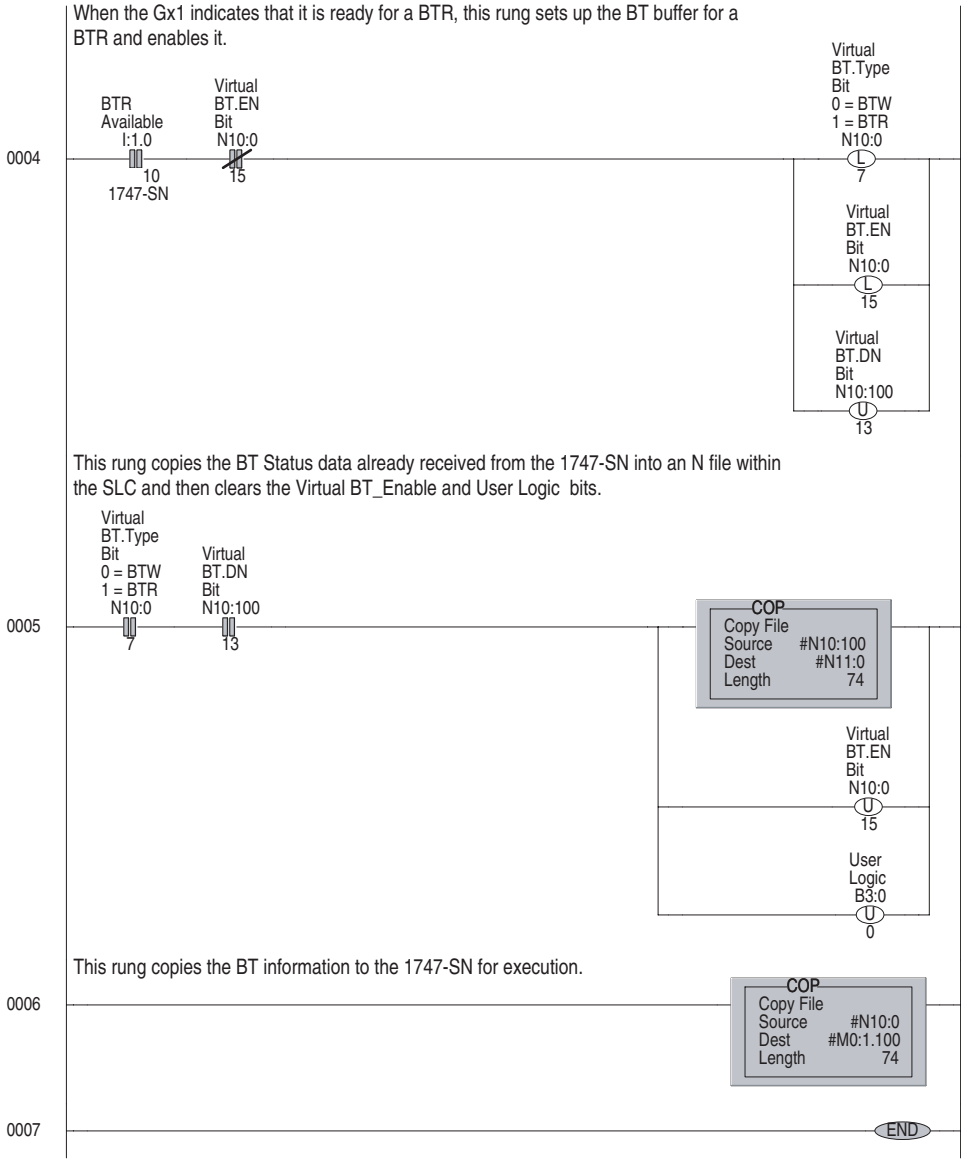

Example Data File

Data is displayed as decimal values.

	0	1	2	3	4	5	6	7	8	9
N10:0	128	64	0							
N10:10	3	768	78*							
. . .										
N10:100	0	64	0							
N10:110	24	768	78	7	354	1	1	1	0	24900
N10:120	24948	20256	29813	17440	8241	8224	8224	3850	0	125
N10:130	0	8224	8224							
. . .										

Artisan Scientific - Quality Instrumentation ... Guaranteed | (888) 88-SOURCE | www.artisan-scientific.com

Calculating the Rack, Group, Slot Address

The Rack, Group, Slot address for a block transfer is calculated as shown in the table below.

Rack, Group, Slot Address	Decimal Value
0,0,0	0
1,0,0	100
1,2,0	120
2,4,0	240

This value is needed as part of the data file that is copied to the M0-file block transfer buffer in the 1747-SN RIO Scanner module.

Example Logix5550 Block Transfers

Figure 5.6 is an example of block transfer programming from a Logix5550 controller to a Remote I/O communications module.

Artisan Scientific - Quality Instrumentation ... Guaranteed | (888) 88-SOURCE | www.artisan-scientific.com

Figure 5.6 Example for a Logix5550

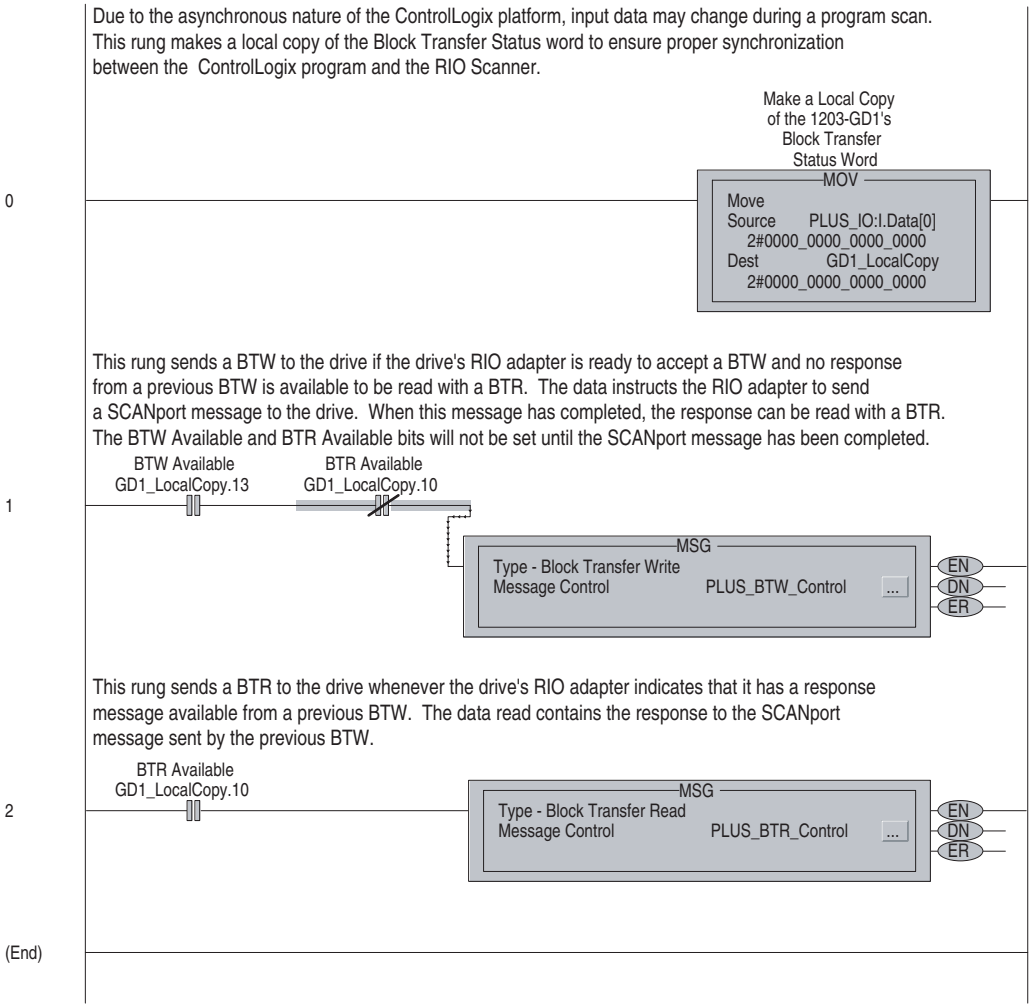

Notes Regarding Block Transfer Programming

- A Block transfer subroutine can be used to transfer more data than can be moved in a single block transfer. If this is done, the block transfers must be carefully sequenced so that one Block Transfer Write and one Block Transfer Read occur for each portion of the sequence. One method of doing this is to set a latch bit to enable the Block Transfer Write and unlatch this bit when the Block Transfer Write is completed. When the Block Transfer Read completes, the program can then set up the data for the next transfer.
- The status bits from the BTW and BTR Control files (.EN, .DN, .ER) may change at any time during a program scan. If they are used by the program they should be copied to a file and the program should use the copied versions.

Artisan Scientific - Quality Instrumentation ... Guaranteed | (888) 88-SOURCE | www.artisan-scientific.com

Troubleshooting

Chapter Objectives

Chapter 6 provides information about the LEDs on the Remote I/O modules. It also provides basic troubleshooting procedures. In this chapter, you will read about the following:

- Locating the LEDs.
- Using the LEDs to troubleshoot.

LEDs on the Remote I/O Communications Module

Figure 6.1
LED Status Indicators

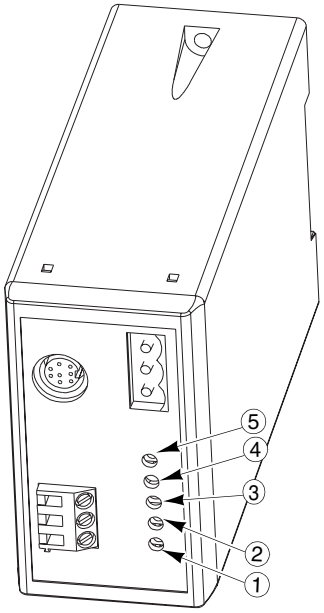

1203-GD1 Module and 1203-GK1 Module

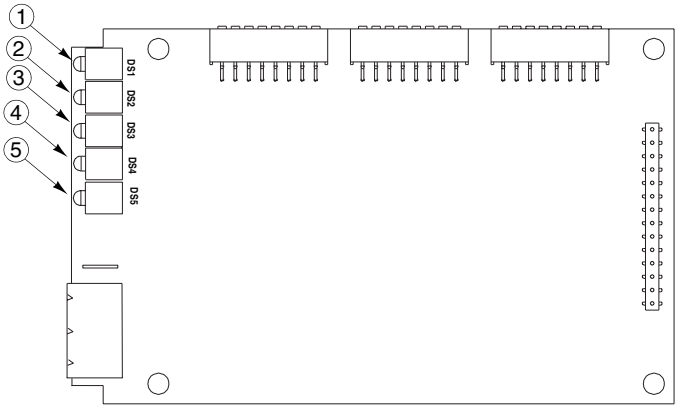

1336-GM1 Board

Number	LED	Color
1	Fault	Red
2	SCANport STS	Green①
3	Health	Green①
4	Rem I/O ACT	Green①
5	Rem I/O STS	Green

① Early versions of Remote I/O modules may use amber LEDs instead of green.

Artisan Scientific - Quality Instrumentation ... Guaranteed | (888) 88-SOURCE | www.artisan-scientific.com

FAULT LED

LED Status	Cause	Corrective Action
Red (Steady)	• Unrecoverable Fault	• Replace the module.
Red (Blinking)	• Recoverable Fault • If Health LED is steady, a DIP switch is set incorrectly, there is a bad cable, or an RIO connection between the controller and adapter has not been made.	• Verify that the module is configured correctly. • Verify that the SCANport and Remote I/O cables are correctly wired and securely connected. • Configure or auto-configure the controller.②
Off	• Normal Operation	• None

SCANport STS LED

LED Status①	Cause	Corrective Action
Green (Steady)	• Normal Operation	• None
Green (Blinking)	• If FAULT LED is also blinking, the connected device is not compatible.	• Verify that the connected product is compatible. Refer to Chapter 1.
Off	• No SCANport Connection.	• Verify that the module is connected to the SCANport product. • Verify that the SCANport product is powered. • Cycle power to the module.

Health LED

LED Status①	Cause	Corrective Action
Green (Steady)	• Normal Operation • If FAULT LED is steady, a DIP switch is set incorrectly, there is a bad cable, or an RIO connection between the controller and adapter has not been made.	• None • Verify that the module is correctly configured. • Verify that SCANport and Remote I/O cables are correctly wired and securely connected. • Configure or auto-configure the controller.②
Off	• Internal module fault	• Cycle power.

Rem I/O ACT LED

LED Status①	Cause	Corrective Action
Green (Steady)	• Normal Operation	• None
Off	• No data is being received from the controller.	• Verify that Remote I/O is online. • Verify that the controller is in run mode. • Verify that rack addressing is set correctly. • Verify that the module is connected to the controller.

Rem I/O STS LED

LED Status	Cause	Corrective Action
Green (Steady)	• Normal Operation	• None
Green (Blinking)	• Controller is in reset, program, or test mode. • Controller has more rack space allocated than is used.	• Return the controller to run mode. • Configure or auto-configure the controller.②
Off	• Module is not communicating with the controller. • Module is not connected to the product.	• Verify that the module is connected to the controller. • Verify that the controller is configured to recognize the module. • Verify that the module is connected to the SCANport product.

① Early versions of Remote I/O modules use amber LEDs instead of green.

② The SCANport product should be powered to ensure a successful auto-configure.

Artisan Scientific - Quality Instrumentation ... Guaranteed | (888) 88-SOURCE | www.artisan-scientific.com

Specifications

Appendix Objectives

Appendix A provides the specifications for the 1203-GD1 module, 1203-GK1 module, and the 1336-GM1 board.

Important: Remote I/O communications modules are non-repairable units.

1336-GM1 Board Specifications

The following table gives the specifications for the 1336-GM1 board.

	Category	Specifications
Electrical	Input Voltage	Supplied by the drive
	Input Current	Not Applicable
	Input Frequency	Not Applicable
	SCANport Load	60mA DC
Environmental	Operating Temperature	0 to +50°C (32 to 122°F)
	Storage Temperature	–40 to +85°C (–40 to 185°F)
	Relative Humidity	0 – 95%, non-condensing
Communications	Product	SCANport
	Controller	Allen-Bradley Remote I/O
	Baud Rates	57.6K, 115.2K, 230.4K
	Rack Sizes	1/4, 1/2, 3/4, full
Mechanical	Height	71 mm (2.8")
	Width	114 mm (4.5")
	Depth	127 mm (0.5")
	Enclosure	Open (IP00)
Regulatory Agencies	UL	
	CSA	
	CE	

ATTENTION: The 1336-GM1 communications board contains ESD (Electrostatic Discharge) sensitive parts. Static control precautions are required when installing and removing this assembly. Device malfunction may occur if you do not follow ESD control procedures. If you are not familiar with static control procedures, refer to Rockwell Automation Publication 8000-4.5.2, *Guarding Against Electrostatic Damage*, or other applicable ESD protection handbook.

Artisan Scientific - Quality Instrumentation ... Guaranteed | (888) 88-SOURCE | www.artisan-scientific.com

1203-GD1 Module Specifications

The following table gives the specifications for the 1203-GD1 module.

	Category	Specifications
Electrical	Input Voltage	85 to 264 V AC, 1 phase
	Input Current	35 mA maximum
	Input Frequency	45 to 63 Hz
	SCANport Load	60mA DC
Environmental	Operating Temperature	0 to +50°C (32 to 122°F)
	Storage Temperature	–40 to +85°C (–40 to 185°F)
	Relative Humidity	0 – 95%, non-condensing
Communications	Product	SCANport
	Controller	Allen-Bradley Remote I/O
	Baud Rates	57.6K, 115.2K, 230.4K
	Rack Sizes	1/4, 1/2, 3/4, full
Mechanical	Height	76 mm (3.0")
	Width	45 mm (1.8")
	Depth	123 mm (4.8")
	Enclosure	NEMA Type 1 (IP30)
	DIN Rail Standard	35 x 7.5 mm (1.38 x 0.30 in)
Regulatory Agencies	UL	
	CSA	
	CE	

1203-GK1 Module Specifications

The following table gives the specifications for the 1203-GK1 module.

	Category	Specifications
Electrical	Input Voltage	24 V DC, +/- 10%
	Input Current	0.4 A maximum
	SCANport Load	60mA DC
Environmental	Operating Temperature	0 to +50°C (32 to 122°F)
	Storage Temperature	–40 to +85°C (–40 to 185°F)
	Relative Humidity	0 – 95%, non-condensing
Communications	Product	SCANport
	Controller	Allen-Bradley Remote I/O
	Baud Rates	57.6K, 115.2K, 230.4K
	Rack Sizes	1/4, 1/2, 3/4, full
Mechanical	Height	76 mm (3.0")
	Width	45 mm (1.8")
	Depth	123 mm (4.8")
	Enclosure	NEMA Type 1 (IP30)
	DIN Rail Standard	35 x 7.5 mm (1.38 x 0.30 in)
Regulatory Agencies	UL	
	CSA	
	CE	

Artisan Scientific - Quality Instrumentation ... Guaranteed | (888) 88-SOURCE | www.artisan-scientific.com

Supported Block Transfer Messages

Appendix Objectives

Appendix B provides information about the Block Transfer messages supported by the Remote I/O communications module. In this appendix, you will read about the following:

- Block transfer status word.
- Setting up data files for block transfer messages.
- Examples of block transfer messages.
- Block transfer quick reference.

Important: This appendix provides detailed examples of block transfer messages. For information about block transfer messages, also refer to Chapter 5.

ATTENTION: Hazard of equipment damage exists. If block transfer messages are programmed to frequently write parameter data, the EEPROM (Non-Volatile Storage) will quickly exceed its life cycle and cause the product to malfunction. Do not create a program that frequently uses block transfer messages to write parameter data to a product. Datalinks do not write to the EEPROM and should be used for frequently changed parameters.

Supported Block Transfer Messages

The following table lists the examples of block transfer messages in this chapter.

Command	Page	Command	Page
Parameter Value Read ①	B-3	Continuous Parameter Value Read①	B-14
Parameter Value Write ①	B-4	Save/Recall/Initialize①	B-16
Parameter Read Full ①	B-5	Fault Command Write① ②	B-17
Product ID Number Read ①	B-8	Fault Queue Entry Read Full ①②	B-18
Scattered Parameter Value Read①	B-10	Fault Queue Size Read①	B-20
Scattered Parameter Value Write①	B-12	Trip Fault Queue Number①	B-21

①This function can be accessed in the module and product. The following examples describe how to access it in the product. To do so in the module, add 16384 to the decimal value of header word 2.

② These block transfer messages can be used for both faults and warnings. See details on the referenced page.

Refer to the quick reference on page B-22 for a complete list of block transfer messages.

Artisan Scientific - Quality Instrumentation ... Guaranteed | (888) 88-SOURCE | www.artisan-scientific.com

Block Transfer Data Structure

Successful Messages

When an operation is successful, header word 1 of the drive response contains a positive value (bit 15 = 0) and data follows.

Figure B.1 Example Message Structure and Reply

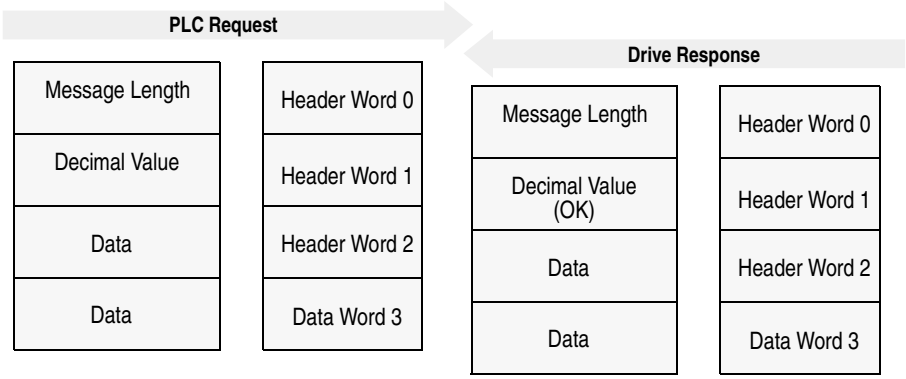

Unsuccessful Messages

When an operation is unsuccessful, header word 1 of the drive response contains a negative value (bit 15 = 1).

If an error occurs, the drive also returns an error code to indicate the reason for the failure. The location of the error code is typically data word 3 in the drive response, but will depend on the message.

Figure B.2 Example Message Structure and Error Message Reply

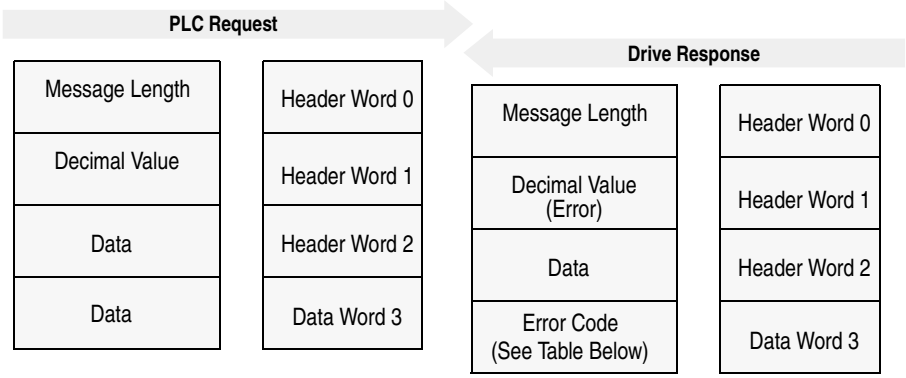

The following table lists the error codes.

Value	Description
0	No error occurred.
1	The service failed due to an internal reason, and the drive could not perform the request.
2	The requested service is not supported.
3	An invalid value in the block transfer request header word 2.
4	An invalid value in the block transfer request header word 3.
5	An invalid value in the block transfer request header word 2.
6	The data value is out of range.
7	There is a drive state conflict. The drive is in an incorrect state to perform the function. The drive cannot be running when you perform certain functions.

Artisan Scientific - Quality Instrumentation ... Guaranteed | (888) 88-SOURCE | www.artisan-scientific.com

Parameter Value Read

Parameter Value Read reads the 16-bit parameter data value for the selected parameter number.

PLC Block Transfer Instruction Data

PLC request instruction length: 3 words
Drive response instruction length: 4 words

Figure B.3 Message Structure

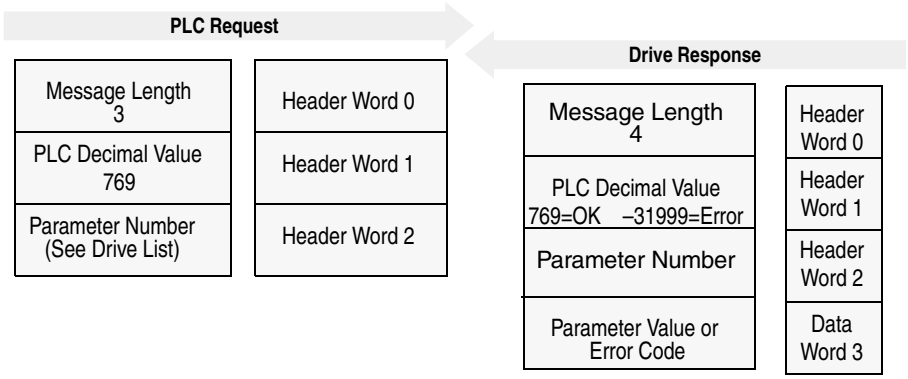

Message Operation

Parameter Value Read reads parameter values from the drive and places that value (or an error code) in word 3 of the drive response data file. The value is shown in device units. Device units are listed in the user manual for the device you are using.

If an error occurs:

- Word 3 of the response contains the status code.
- The status area of the data file is non-zero.

Example

In this example, the value of parameter 20 was requested from a 1336 PLUS drive and a value of 4096 was returned. 4096 is the internal drive unit value for *Maximum Rated Voltage*. This corresponds to a value of 100% Drive Rated Volts in Display Units.

Data File Format

	0	1	2	3	4	5	6	7	8	9
PLC request	3	769	20*							
Drive response	4	769	20*	4069*						

* Example only — These values vary depending on parameters and products.

Artisan Scientific - Quality Instrumentation ... Guaranteed | (888) 88-SOURCE | www.artisan-scientific.com

Parameter Value Write

Parameter Value Write writes a 16-bit parameter data value to the selected parameter number.

PLC Block Transfer Instruction Data

PLC request instruction length: 4 word
Drive response instruction length: 4 words

Figure B.4 Message Structure

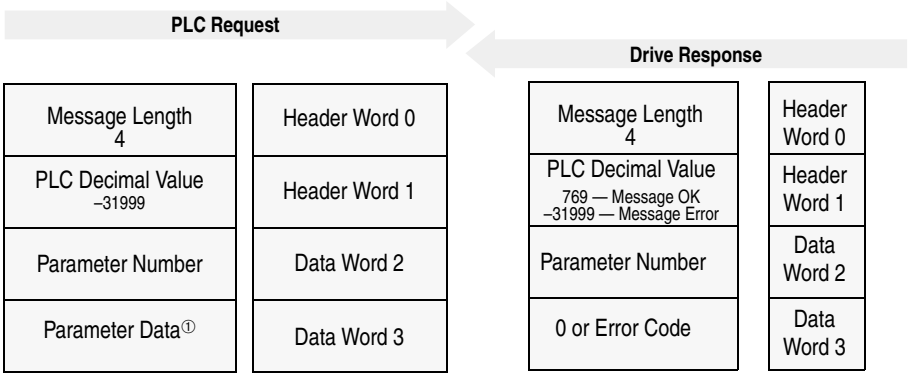

Message Operation

Parameter Value Write sends a new value to the specified parameter. The value must be in device units. Units for each parameter are listed in the device manual.

If an error has occurred, word 1 of the response returns a value of –31999, and word 3 contains a status code.

Example

In this example, a value of 4096 was sent to Parameter 20. 4096 is in drive units and indicates a value of 100% Drive Rated Volts, as defined in P147, *Drive Rated Volts*.

Data File Format

	0	1	2	3	4	5	6	7	8	9
PLC request	4	–31999	20*	4096*						
Drive response	4	769	20*	0*						

① For parameter values greater than 32,767, you may need to enter the value in hexadecimal.

* Example only — These values vary depending on parameters and products.

Artisan Scientific - Quality Instrumentation ... Guaranteed | (888) 88-SOURCE | www.artisan-scientific.com

Parameter Read Full

Parameter Read Full provides all known attributes for the parameters requested. This information includes the parameter's current value, descriptor, multiply and divide value, base value, offset value, text string, group element reference, minimum value, maximum value, default value, and unit text string.

PLC Block Transfer Instruction Data

PLC request instruction length: 3 words
Drive response instruction length: 23 words

Figure B.5 Message Structure

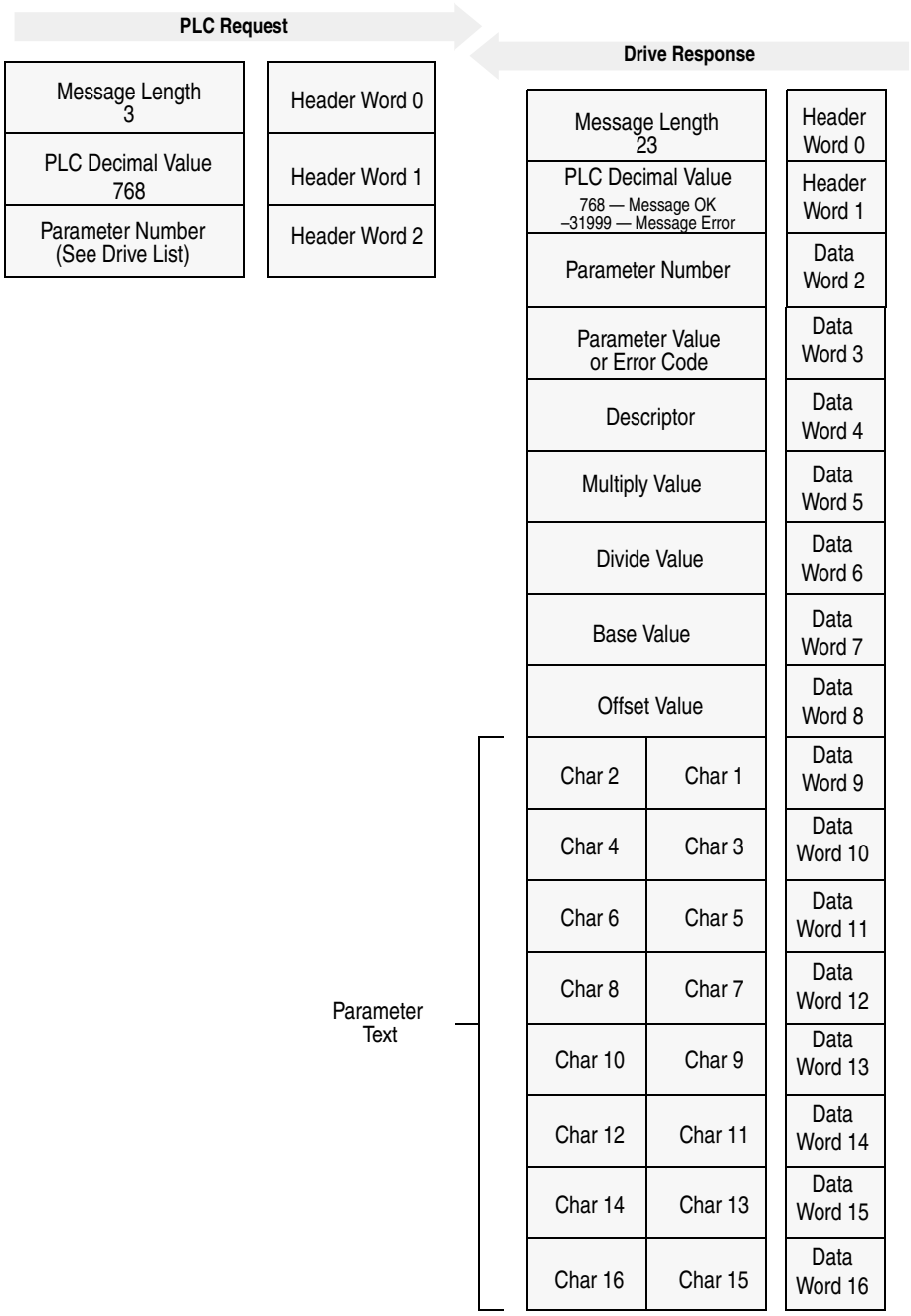

Artisan Scientific - Quality Instrumentation ... Guaranteed | (888) 88-SOURCE | www.artisan-scientific.com

Message Structure (Continued)

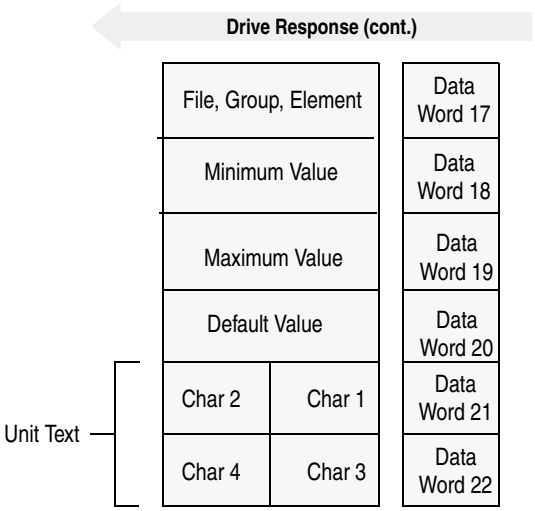

Message Operation

Parameter Read Full retrieves the attributes of the specified parameter. The attributes for each parameter include the data, minimum and maximum values, and the parameter text. The response message returns this information.

If an error has occurred in reading any of the values, word 3 contains the status word.

The parameter text is returned with each data word containing two ASCII characters per word. The first and second characters are in opposite order.

Example

In this example, a **Parameter Read Full** was performed through block transfer on a 1336 PLUS drive. N10:10 shows the header message for the request. The data is returned in the response data file, starting with word 3, for parameter 20. Word 3 shows the present value in drive units. Word 4 through word 8 provide scaling information, used to convert drive units to engineering units for the Human Interface Module (HIM). Word 9 through word 16 provide the parameter name.

Artisan Scientific - Quality Instrumentation ... Guaranteed | (888) 88-SOURCE | www.artisan-scientific.com

This example shows the response message in both binary and ASCII. Note the ASCII information beginning with word 9. The parameter name characters return in reverse order for each word. Word 9 has the ASCII value of (aM). To read this, reverse the word to read (Ma). The next word (ix), reversed, gives you (xi). These words, along with the following two words, form the word *Maximum*. You can see the parameter name *Maximum Voltage* in word 9 through word 16 of the response message. In addition, words 21 – 22 are also returned in this format. These words provide the units in which the parameter is defined. In this example it is *vlts*.

Word 17 contains the file, group, and element which are used to reference the parameter.

Words 18 – 20 contain the minimum, maximum, and default values of this parameter.

Data File Format

	0	1	2	3	4	5	6	7	8	9
PLC request	3	768	20*							
Drive response (Decimal)	23	768	20*	4096*	355*	1*	4096*	460*	0*	24909*
	27000*	30061*	8301*	28502*	29804*	26465*	8293*	1794*	1024*	4915*
	4096*	27734*	29556*							
Drive response (ASCII)	\00\17	\03\00	\00\14	\10\00	\01 c	\00\01	\10\00	\01\CC	\00\00	a M
	i x	u m	m	o V	t l	g a	e	07 02	04 00	\13 0
	\10\00	l V	s t							

* Example only — These values vary depending on parameters and products.

Artisan Scientific - Quality Instrumentation ... Guaranteed | (888) 88-SOURCE | www.artisan-scientific.com

Product ID Number Read

Product ID Number Read returns the product ID of the device to which the Remote I/O module is connected.

PLC Block Transfer Instruction Data

PLC request instruction length: 3 words
Drive response instruction length: 4 words

Figure B.6 Message Structure

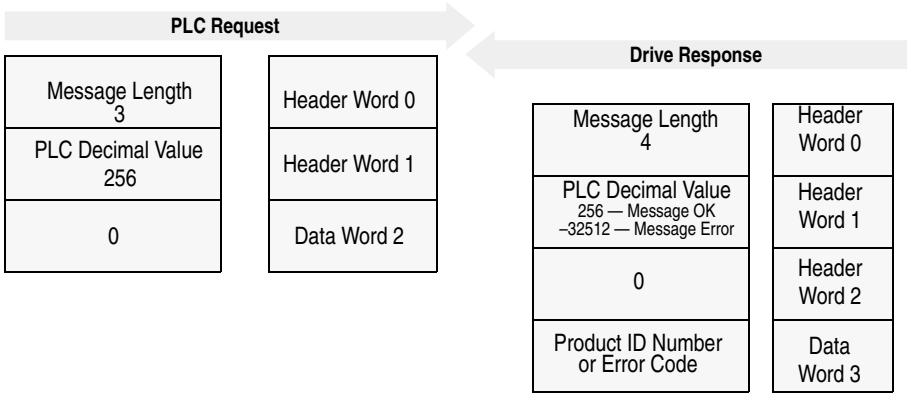

Product Code (Hex)	Product Code (Decimal)	Bulletin Number	Product
0x02	2	1336S	1336 PLUS 0.5 – 10 HP
0x03	3	1336S	1336 PLUS 7.5 – 800 HP
0x07	7	1336F	1336 PLUS II
0x10	16	1336T	1336 FORCE w/PLC Adapter Board
0x11	17	2364F	2364 RGU DC Bus Regen Front End
0x12	18	1394	1394 Motion Drive
0x13	19	1557	1557 Medium Voltage AC Drive
0x14	20	193	SMP-3
0x15	21	150	SMC Dialog Plus
0x17	23	1305	1305 AC Drive
0x18	24	1397	1397 DC Drive
0x19	25	1336R	1336 Line Regeneration Package
0x20	32	1336T	1336 FORCE w/Standard Adapter Board
0x22	34	1336E	1336 IMPACT

Message Operation

Product ID Number Read, through the drive response message word 3, indicates the type of device the Remote I/O module is connected to. This value is defined in the message response chart shown above.

If an error has occurred, word 1 of the response returns a negative value of –32512.

Artisan Scientific - Quality Instrumentation ... Guaranteed | (888) 88-SOURCE | www.artisan-scientific.com

Example

In this example, the **Product ID Number Read** was requested. The drive response contained a value of 3 in word 3 of its message response, indicating a connection to a 1336 PLUS drive.

Data File Format

	0	1	2	3	4	5	6	7	8	9
PLC request	3	256	0							
Drive Response	4	256	0	3*						

* Example only — These values vary depending on parameters and products.

Artisan Scientific - Quality Instrumentation ... Guaranteed | (888) 88-SOURCE | www.artisan-scientific.com

Scattered Parameter Value Read

Scattered Parameter Value Read reads a scattered list of parameters.

PLC Block Transfer Instruction Data

PLC request instruction length: 5 – 64 words
Drive response instruction length: 5 – 64 words

Figure B.7 Message Structure

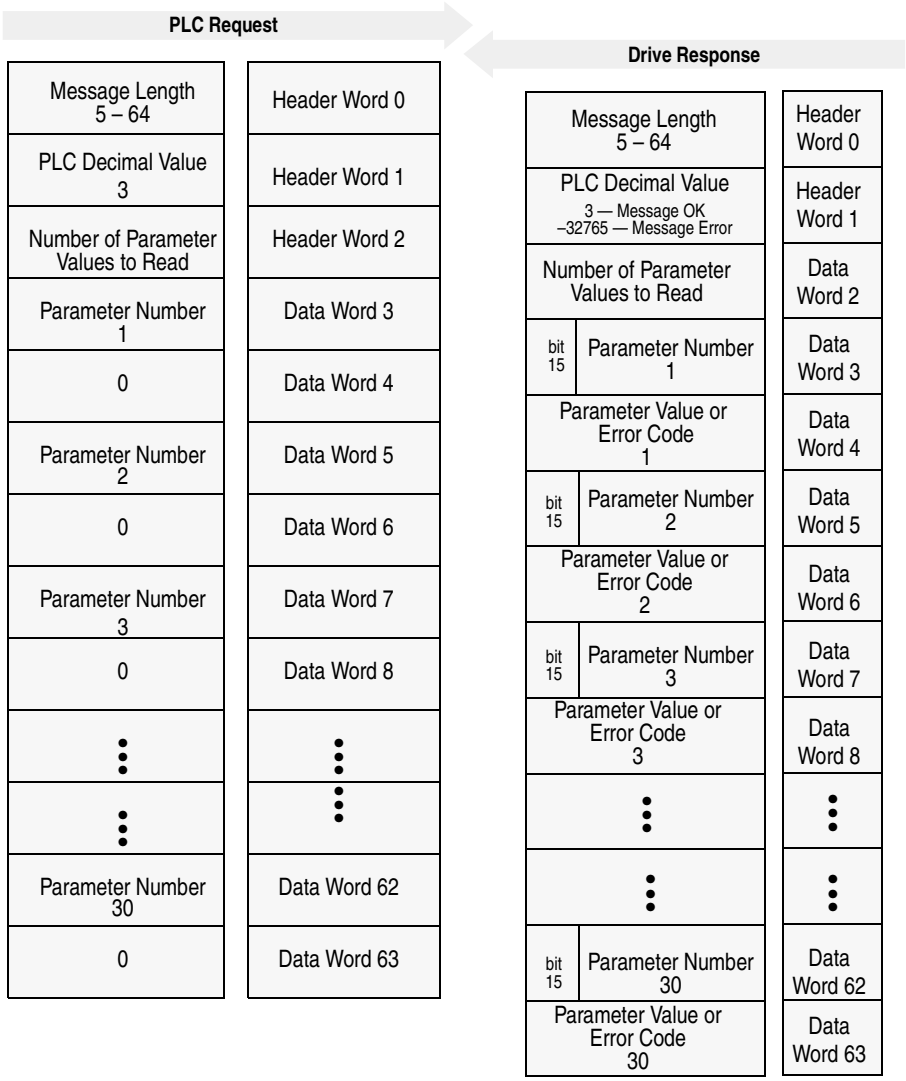

Message Operation

Scattered Parameter Value Read reads a pre-defined group of parameter values, in any order, from the device. You define the number of parameters to read in word 2 of the request. The parameters to be read and their order is defined starting with word 3. An unused word is left between each parameter request, so the drive can respond with the parameter value, as shown.

Artisan Scientific - Quality Instrumentation ... Guaranteed | (888) 88-SOURCE | www.artisan-scientific.com

If an error has occurred in reading any of the parameters:

- Word 1 of the drive response returns a value of –32765.
- Bit 15 of the drive response word for the number of that parameter is set.
- The drive response word for the value of that parameter returns a status word instead of returning the parameter value.

Example

In this example, eight parameters were read from a 1336 PLUS drive, as defined in word 2 of the request. Parameter numbers 5, 7, 8, 20, 18, 17, 19, and 36 were requested. The drive response returned the values of these parameters in the data file. These values are in drive units.

Data File Format

	0	1	2	3	4	5	6	7	8	9
PLC request	19	3	8*	5*	0	7*	0	8*	0	20*
	0	18*	0*	17*	0	19*	0	36*	0	
Drive response	19	3	8*	5*	6*	7*	1000*	8*	1000*	20*
	4096*	18*	4096*	17*	51*	19*	60*	36*	6144*	

* Example only — These values vary depending on parameters and products.

Artisan Scientific - Quality Instrumentation ... Guaranteed | (888) 88-SOURCE | www.artisan-scientific.com

Scattered Parameter Value Write

Scattered Parameter Value Write writes to a scattered list of parameters and returns the status of each parameter. If any of the states have errors, the parameter number is negative.

PLC Block Transfer Instruction Data

PLC request instruction length: 5 – 64 words
Drive response instruction length: 5 – 64 words

Figure B.8 Message Structure

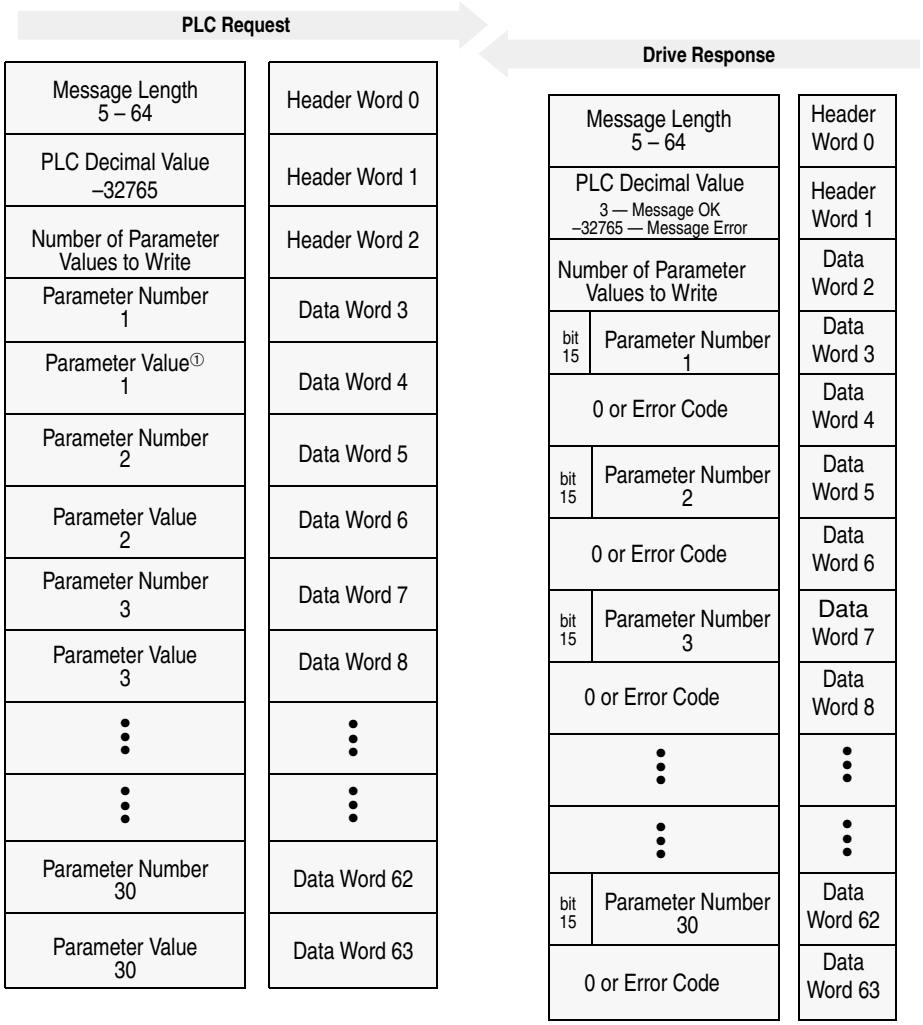

① For parameter values greater than 32,767, you may need to enter the value in hexadecimal.

Message Operation

Scattered Parameter Value Write writes data values to a pre-defined group of device parameters in any order. You define the number of parameters to write in word 2. The parameters to be written to and their order is defined starting with word 3.

Artisan Scientific - Quality Instrumentation ... Guaranteed | (888) 88-SOURCE | www.artisan-scientific.com

If an error occurs while writing to any of the parameters:

- Word 1 of the drive response returns a value of –32765.
- Bit 15 of the drive response word for that parameter's number is set.
- The drive response word for that parameter's status word is non-zero.

If no error has occurred:

- Word 1 of the drive response returns a value of 3.
- Each of the drive response's parameter numbers are the same as in the request.
- Each of the drive response status words returns a value of 0.

Example

In this example, six parameters were written to in a 1336 PLUS drive. Word 2 of the request defines the number of parameter values that are transferred. Beginning with word 3, the message lists each parameter number followed by the value of the parameter. The values are entered in device units.

The drive response returns the status of each parameter write. If the request was successful, a zero is returned. If an error has occurred, the response returns a status word code for the error.

Data File Format

	0	1	2	3	4	5	6	7	8	9
PLC request	15	–32765	6*	90*	1*	150*	4*	30*	20*	31*
	10*	10*	2*	12*	5*					
Drive response	15	3	6*	90*	0*	150*	0*	30*	0*	31*
	0*	10*	0*	12*	0*					

* Example only — These values vary depending on parameters and products.

Artisan Scientific - Quality Instrumentation ... Guaranteed | (888) 88-SOURCE | www.artisan-scientific.com

Continuous Parameter Value Read

Continuous Parameter Value Read reads a continuous list of parameters beginning with the starting parameter number.

PLC Block Transfer Instruction Data

PLC request instruction length: 4 words

Drive response instruction length: 5 – 64 words

Figure B.9 Message Structure

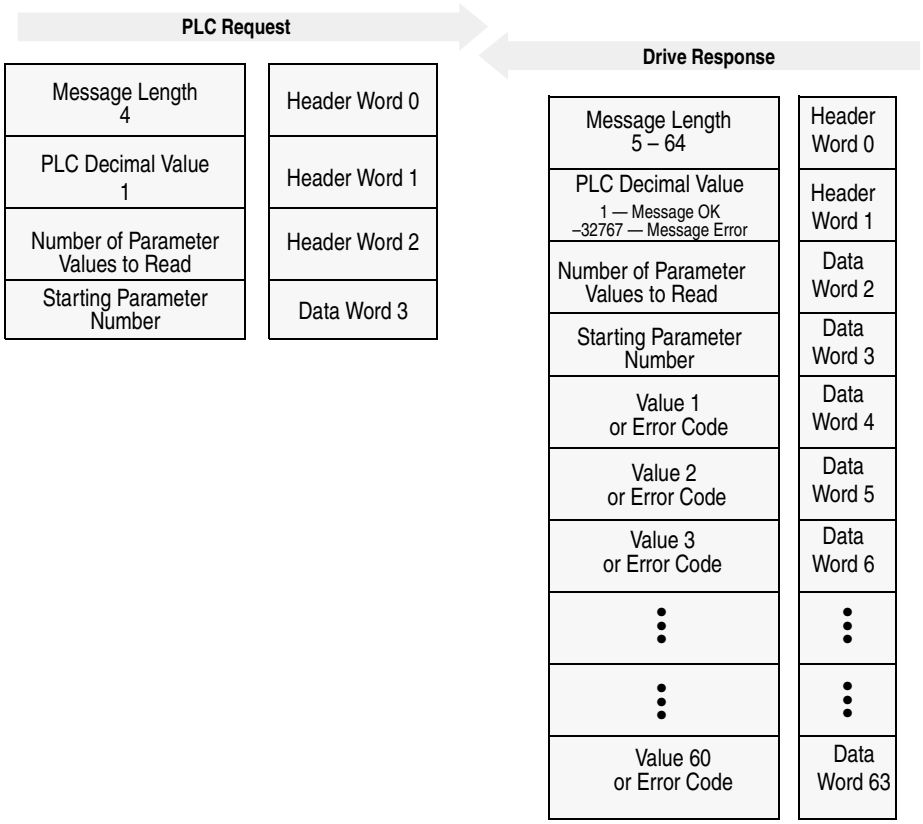

Message Operation

This function specified in the request will read a consecutive group of parameter values from the device, beginning with the starting parameter number defined in Word 3 of the request. The number of parameters to be read is defined in Word 2 of the request. The values will return in the response, beginning with Word 4. If an error has occurred in reading any of the parameters, Word 1 of the response will return a value of -32767 and the response word for that parameter will return a status word instead of a parameter value.

Artisan Scientific - Quality Instrumentation ... Guaranteed | (888) 88-SOURCE | www.artisan-scientific.com

Example

In this example, 60 parameters were read from a 1336 PLUS drive, beginning with parameter 10. The values of these parameters are returned in the response. The values are in Drive Units.

Data Format

	0	1	2	3	4	5	6	7	8	9
PLC request	4	1	60*	10*						
Drive response	64	1	60*	10*	0*	0*	0*	0*	0*	100*
	0*	50*	4096*	60*	4096*	1*	6*	0*	1000*	0*
	0*	0*	0*	0*	1000*	1000*	400*	400*	400*	0*
	6144*	2*	4710*	1*	1*	0*	0*	0*	0*	2*
	64*	0*	0*	15*	1024*	0*	0*	5811*	0*	18*
	0*	0*	0*	3597*	0*	12808*	6*	0*	0*	17952*
	0*	0*	0*	0*						

* Example only — These values vary depending on parameters and products.

Artisan Scientific - Quality Instrumentation ... Guaranteed | (888) 88-SOURCE | www.artisan-scientific.com

Save/Recall/Initialize

Save/Recall/Initialize—NVS (Non-Volatile Storage) Functions—activates the specified function. These functions are also referred to as EEPROM functions.

PLC Block Transfer Instruction Data

PLC request instruction length: 4 words
Drive response instruction length: 4 words

Figure B.10 Message Structure

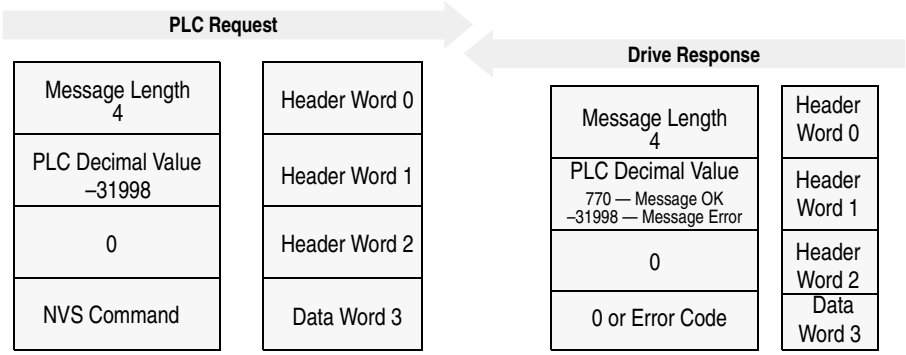

Value	NVS Command
00	Not Used
01	NVS Save
02	NVS Recall
03	NVS Default Initialize

Message Operation

This function allows three different message requests:

- NVS Save saves parameter information from the working memory or RAM to NVS Storage.
- NVS Recall retrieves the last saved data from NVS Storage and places it in the working memory or RAM.
- NVS Default Initialize clears the RAM and NVS Storage and sets all parameter values to default.

If an error has occurred, response word 1 returns a value of -31998.

Example

This example requests the NVS Storage Save function be performed.

Data File Format

	0	1	2	3	4	5	6	7	8	9
PLC request	4	–31998	0*	0, 1, 2, or 3						
Drive response	4	770	0*	0*						

* Example only — These values vary depending on parameters and products.

Artisan Scientific - Quality Instrumentation ... Guaranteed | (888) 88-SOURCE | www.artisan-scientific.com

Fault Command Write

Fault Command Write activates the Clear Fault, Clear Fault Queue, and Drive Reset functions.

PLC Block Transfer Instruction Data

PLC request instruction length: 4 words
Drive response instruction length: 4 words

Figure B.11 Message Structure

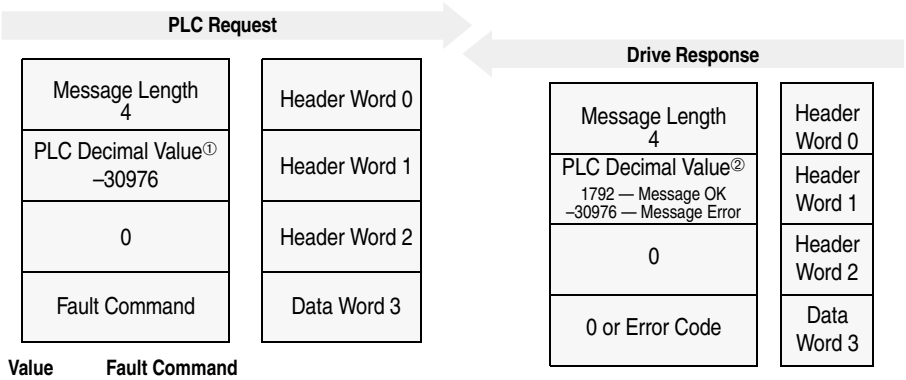

Value	Fault Command
00	Not Used
01	Clear Fault
02	Clear Fault Queue
03	Drive Reset (1336 FORCE Only)

Message Operation

The specified fault command function sends a fault handling request to the device.

- A Clear Fault request clears the last fault that occurred.
- A Clear Fault Queue clears the entire fault buffer. Certain devices may store more than one fault.
- A Drive Reset is used with the 1336 FORCE drive product only. This function resets the drive; it clears the fault queue and writes the parameter information stored in NVS Storage to RAM.

Data File Format

	0	1	2	3	4	5	6	7	8	9
PLC request	4	–30976	0	0, 1, 2, or 3						
Drive response	4	1792	0	0*						

① For Warning Clear messages, the PLC decimal value is -30720. You can use three values: 0 = Not used, 1 = Clear Warning, and 2 = Clear Warning Queue.

② For Warning Clear messages, a message OK returns 2048, and a message error returns -30720.

* Example only — These values vary depending on parameters and products.

Artisan Scientific - Quality Instrumentation ... Guaranteed | (888) 88-SOURCE | www.artisan-scientific.com

Fault Queue Entry Read Full

Fault Queue Entry Read Full reads the contents of the specified fault queue entry. A message is returned which includes the fault text and fault code associated with the fault. The 1336 FORCE drive also returns the time stamp associated with the fault.

PLC Block Transfer Instruction Data

PLC request instruction length: 3 words
Drive response instruction length: 12 or 16 words

Figure B.12 Message Structure

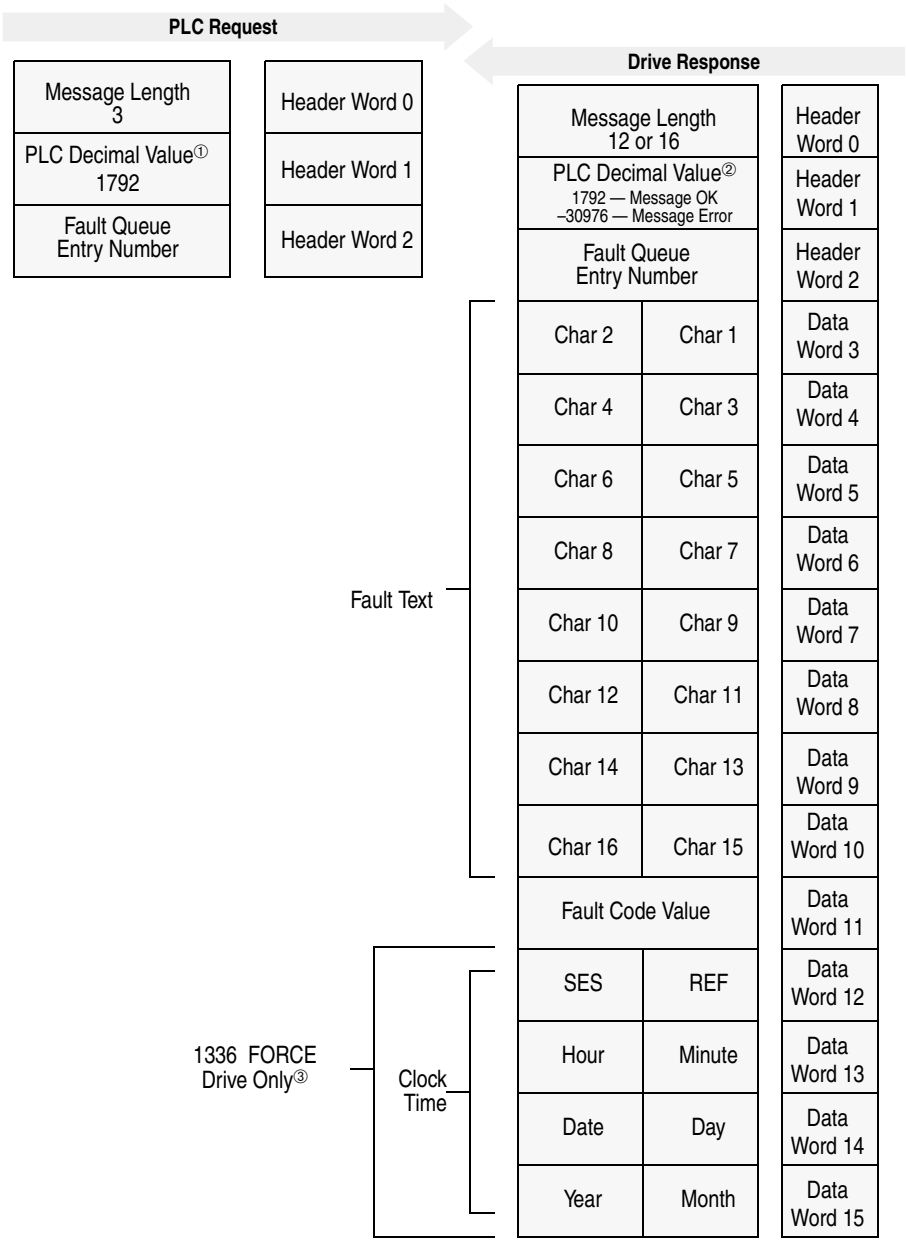

① For Warning Queue Read Full messages, the PLC decimal value is 2048.

② For Warning Queue Read Full messages, a message OK returns 2048, and a message error returns -30720.

③ Other drives return zeros.

Artisan Scientific - Quality Instrumentation ... Guaranteed | (888) 88-SOURCE | www.artisan-scientific.com

Message Operation

Fault Queue Entry Read Full reads the contents of the fault queue specified in word 3 of the request. The response returns the fault text which can be ASCII text. Every two characters of text are in reverse order. Also, the 1336 FORCE drive returns a time stamp, indicating the day and time the fault occurred.

If an error has occurred, word 1 of the response returns a negative value.

Example

In this example, Fault Queue Entry number 3 was retrieved from a 1336 PLUS drive. The fault code for this example is 22, and the fault name is Drive Reset Flt. The fault code (22) is word 11 (12th word) in the decimal drive response. The fault name (Drive Reset Flt) is in the ASCII drive response. Note that every other character is reversed.

Data File Format

	0	1	2	3	4	5	6	7	8	9
PLC request	3	1792	3*							
Drive response (Decimal)	12	1792	3*	29252*	20313*	8293*	25938*	25971*	8308*	27718*
	8303*	22*								
Drive response (ASCII)	\00\12	\07\00	\03\00	r D	v i	e	e R	e s	t	l F
	t	\00\16								

* Example only — These values vary depending on parameters and products.

Artisan Scientific - Quality Instrumentation ... Guaranteed | (888) 88-SOURCE | www.artisan-scientific.com

Fault Queue Size Read

Fault Queue Size Read gets the number of fault entries allowed in the fault queue.

PLC Block Transfer Instruction Data

PLC request instruction length: 3 words
Drive response instruction length: 4 words

Figure B.13 Message Structure

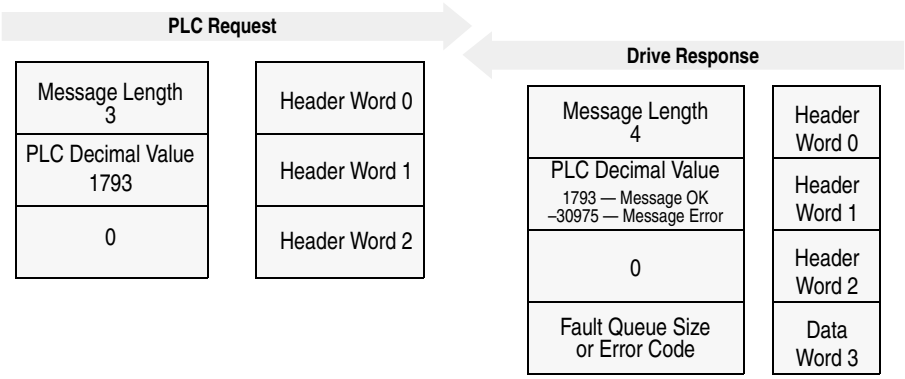

Message Operation

Fault Queue Size Read reads back the size of the fault queue available in the product. Each product may have a different number of fault queue entries available for storage.

If an error has occurred, word 1 of the response returns a value of -30975.

Example

In this example, a 1336 PLUS drive was used. This product has a fault queue of four storage locations available to store faults. This value is seen in word 3 of the response header message.

Data File Format

	0	1	2	3	4	5	6	7	8	9
PLC request	3	1793	0							
Drive response	4	1793	0	4*						

* Example only — These values vary depending on parameters and products.

Artisan Scientific - Quality Instrumentation ... Guaranteed | (888) 88-SOURCE | www.artisan-scientific.com

Trip Fault Queue Number Read

Trip Fault Queue Number Read provides the fault queue number of the fault that caused the device to trip.

PLC Block Transfer Instruction Data

PLC request instruction length: 3 words
Drive response instruction length: 4 words

Figure B.14 Message Structure

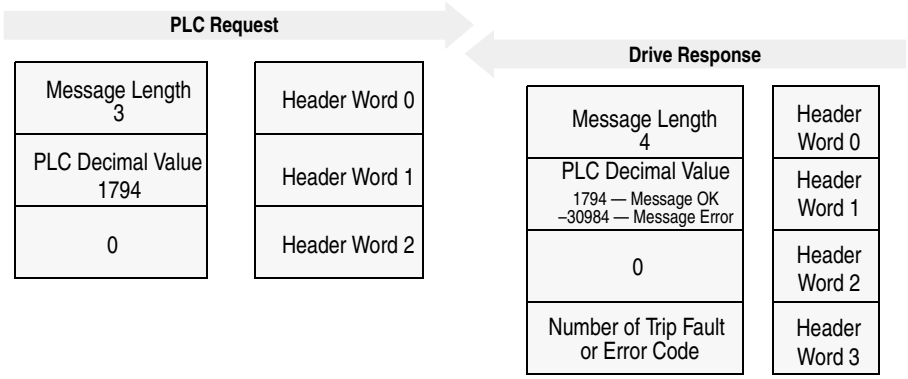

Message Operation

Trip Fault Queue Number Read provides the number of the entry in the fault queue that tripped the device in word 3 of the drive response. The fault queue number is 0 when the device is not faulted.

If an error has occurred in the block transfer, word 1 of the response is negative.

Example

In this example, the device has stored a fault in the first entry of the fault queue that caused the drive to trip. Word 3 of the response indicates the entry number.

Data File Format

	0	1	2	3	4	5	6	7	8	9
PLC request	3	1794	0							
Drive response	4	1794	0	1*						

* Example only — These values vary depending on parameters and products.

Artisan Scientific - Quality Instrumentation ... Guaranteed | (888) 88-SOURCE | www.artisan-scientific.com

Block Transfer Quick Reference

The following table provides a list of block transfers and a description of the data that is entered in the first few words.

Class	Message	Word 0 Message Length	Word 1 Decimal Value	Word 2 Data	Word 3 Data	Word 4 Data	Word 5 Data	Word 6 Data	Example
Parameter Read	Continuous Parameter Value Read	4	1	Number of Parameters	Starting Parameter	①	①	①	B-14
	Parameter Read Full	3	768	Parameter Number	①	①	①	①	B-5
	Parameter Value Read	3	769	Parameter Number	①	①	①	①	B-3
	Scattered Parameter Value Read	5 – 64	3	Number of Parameters	First Parameter	0	Second Parameter	0	B-10
Parameter Write	Continuous Parameter Value Write	5 – 64	-32767	Number of Parameters	Starting Parameter	First Parameter Value	Second Parameter	Second Parameter Value	②
	Parameter Value Write	4	-31999	Parameter Number	Parameter Value	①	①	①	B-4
	Scattered Parameter Value Write	5 – 64	-32765	Number of Parameters	First Parameter	First Parameter Value	Second Parameter	Second Parameter Value	B-12
Fault Queue	Fault Command Write	4	-30976	0	Fault Command	①	①	①	B-17
	Fault Queue Entry Read Full	3	1792	Fault Queue Entry Number	①	①	①	①	B-18
	Fault Queue Size Read	3	1793	0	①	①	①	①	B-20
	Trip Fault Queue Number Read	3	1794	0	①	①	①	①	B-21
Warning Queue	Warning Command Write	4	-30720	0	Warning Command	①	①	①	B-17
	Warning Queue Read Full	3	2048	Warning Queue Entry Number	①	①	①	①	B-18
	Warning Queue Size Read	3	2049	0	①	①	①	①	②
EE Memory Request	Save/Recall/Initialize	4	-31988	0	EE Com-mand	①	①	①	B-16
Link Read	Continuous Parameter Link Read	4	4	Number of Links	Starting Link Number	①	①	①	②
	Parameter Link Read	3	2304	Link Number	①	①	①	①	②
	Scattered Parameter Link Read	5 – 64	5	Number of Links	First Link Number	0	Second Link Number	0	②
Link Write	Continuous Parameter Link Write	5 – 64	-32764	Number of Links	Starting Link Number	First Link Number	Second Link Number	Third Link Number	②
	Parameter Link Clear	4	-30464	0	1	①	①	①	②
	Parameter Link Write	4	-30464	Link Number	Link	①	①	①	②
	Scattered Parameter Link Write	5 – 64	-32763	Number of Links	First Link Number	First Link	Second Link Number	Second Link	②

① This word is not used.

② Example not available in this manual. Refer to the 1336 FORCE PLC Communications Adapter User Manual, Publication 1336 FORCE -5.13.

③ n x 4096 + offset (bits 0 – 11)

④ Trending is a function of the 1336 FORCE drive with a PLC adapter board.

Artisan Scientific - Quality Instrumentation ... Guaranteed | (888) 88-SOURCE | www.artisan-scientific.com

Class	Message	Word 0 Message Length	Word 1 Decimal Value	Word 2 Data	Word 3 Data	Word 4 Data	Word 5 Data	Word 6 Data	Example
User Text String	User Text String Read	3	261	0	①	①	①	①	②
	User Text String Write	11	-32507	0	char 1/ char 0	char 3/ char2	char 5/ char4	char 7/ char 6	②
Product ID Number Read	Product ID Number Read	3	256	0	①	①	①	①	B-8
Clock Data	Real Time Clock Data Read	3	2816	0	①	①	①	①	②
	Real Time Clock Data Write	7	-29952	0	sec./100th	hour/min.	date/day	year/month	②
Run Time Accumulator	Clear Run Time Accumulator	3	-29950	0	①	①			②
	Run Time Accumulator Data Read	3	2817	0	①	①	①	①	②
Time Stamp	Load Clock Info Reference Stamp	3	-29950	Time Stamp Number	①	①	①	①	②
	Reference Time Stamp Data Read	3	2816	Time Stamp Number	①	①	①	①	②
	Reference Time Stamp Data Write	3	-29952	Time Stamp Number	①	①	①	①	②
Trend File	All Info	3	4098	n x 4096	①	①	①	①	② ④
	Maximum Trend Size Available	3	4097	0	①	①	①	①	② ④
	Number of Trends Available	3	4096	0	①	①	①	①	② ④
	Run File Data	3	4100	③	①	①	①	①	② ④
	Setup Data Full	15	-28670	n x 4096	①	①	①	①	② ④
	Trend Command	4	-28672	n x 4096	1 – 3	①	①	①	② ④
	Trend Parameter Definition	3	4102	n x 4096	①	①	①	①	② ④
	Trend Status	4	4097	n x 4096	1 – 4	①	①	①	② ④
	Trend Triggered Setup Parameter	3	4103	n x 4096	①	①	①	①	② ④
	Trigger Time	3	4099	n x 4096	①	①	①	①	② ④

① This word is not used.

② Example not available in this manual. Refer to the 1336 FORCE PLC Communications Adapter User Manual, Publication 1336 FORCE -5.13.

③ n x 4096 + offset (bits 0 – 11)

④ Trending is a function of the 1336 FORCE drive with a PLC adapter board.

Artisan Scientific - Quality Instrumentation ... Guaranteed | (888) 88-SOURCE | www.artisan-scientific.com

End of Appendix B

Artisan Scientific - Quality Instrumentation ... Guaranteed | (888) 88-SOURCE | www.artisan-scientific.com

Numerics

1203-GD1 module, see Remote I/O communications module

1203-GK1 module, see Remote I/O communications module

1336-GM1 board, see Remote I/O communications module

A

address, **2-12**

application notes, **P-2**

attentions, **P-3**, **2-1**

audience, **P-1**

B

baud rate, **2-11**

block transfer
- data files, **B-1**
- data structure, **B-2**
- examples, **5-3**, **5-5**, **5-7**, **B-1**
- notes, **5-7**
- quick reference, **B-22**
- setting switch for, **2-5**
- status word, **5-2**
- understanding, **5-1**

C

cables
- connecting, **3-4**, **3-7**
- Remote I/O, **3-2**
- removing, **3-1**
- SCANport, **3-1**
- selecting, **3-1**

compatibility, **1-3**

Continuous Parameter Value Read block transfer, **B-14**

control features, **4-2**

controllers
- compatible, **1-3**
- definition, **P-2**
- example programs, **4-1**
- image table, **2-4**, **4-1**

ControlLogix, see Logix5550

D

data files, **B-1**

data storage, **5-3**

data structure, **B-2**

datalinks
- description, **4-2**
- example applications, **4-2**
- setting switches for, **2-7**
- using, **4-2**

default settings, **2-2**

DIN rails, **3-3**

DIP switches, see switches

E

EEPROM, **B-16**

equipment, **1-6**

error codes, **B-2**

examples
- block transfers, **5-3**, **5-5**, **5-7**
- datalinks, **4-3**
- ladder logic programs, **4-8**, **4-10**, **4-12**
- settings for, **4-5**

F

factory default settings, **2-2**

fault action, **2-10**

Fault Command Write block transfer, **B-17**

Fault LED, **6-1**, **6-2**

Fault Queue Entry Read Full block transfer, **B-18**

Fault Queue Size Read block transfer, **B-20**

feedback, **2-6**

firmware, **P-1**

H

Health LED, **6-1**, **6-2**

hold last state, **2-10**

Artisan Scientific - Quality Instrumentation ... Guaranteed | (888) 88-SOURCE | www.artisan-scientific.com

I

image table
- blank, **2-4**
- example, **2-4**
- illustration, **4-2**
- understanding, **4-1**

installing a Remote I/O communications module, **3-3**, **3-6**

L

ladder logic programs, **4-1**

last rack, **2-9**

LEDs, **6-1**, **6-2**

links
- example, **1-2**
- terminating, **3-2**

logic command
- example bits, **4-6**
- setting switch for, **2-5**

logic status
- example bits, **4-7**
- setting switch for, **2-5**

Logix5550 controllers
- block transfers, **5-7**
- compatible, **1-3**
- ladder logic programs, **4-12**

M

manual
- audience, **P-1**
- contents, **P-2**
- online, **P-2**
- purpose, **P-1**
- related documentation, **P-2**

mounting a board, **3-7**

N

NVS (Non-Volatile Storage), **B-16**

P

Parameter Read Full block transfer, **B-5**

Parameter Value Read block transfer, **B-3**

Parameter Value Write block transfer, **B-4**

PLC controllers
- block transfers, **5-3**
- compatible, **1-3**
- ladder logic programs, **4-8**

Product ID Number Read block transfer, **B-8**

products
- compatible, **1-3**
- definition, **P-2**
- see also SCANport products
- supporting datalinks, **4-2**

programs, **4-1**

R

rack
- address, **2-12**
- last, **2-9**
- size, **2-4**, **2-8**

reference, **2-6**

related documentation, **P-2**

Rem I/O ACT LED, **6-1**, **6-2**

Rem I/O STS LED, **6-1**, **6-2**

Remote I/O
- baud rate, **2-11**
- cables, **3-2**, **3-4**, **3-7**
- definition, **P-2**
- example link, **1-2**
- terminating links, **3-2**

Remote I/O communications module
- compatibility, **1-3**
- definition, **P-2**
- description, **1-1**
- features, **1-2**
- illustration, **1-4**, **1-5**
- installing, **3-3**, **3-6**
- parts, **1-4**, **1-5**
- specifications, **A-1**
- types, **1-1**

removing SCANport cables, **3-1**

required equipment, see equipment

resistor, see termination resistor

Artisan Scientific - Quality Instrumentation ... Guaranteed | (888) 88-SOURCE | www.artisan-scientific.com

S

safety precautions, **P-3**, **2-1**

Save/Recall/Initialize block transfer, **B-16**

SCANport
- cables, **3-1**, **3-4**
- definition, **P-2**
- peripherals, **P-2**
- products, **P-2**

SCANport STS LED, **6-1**, **6-2**

Scattered Parameter Value Read block transfer, **B-10**

Scattered Parameter Value Write block transfer, **B-12**

selecting cables, **3-1**

SLC controllers
- block transfers, **5-5**
- compatible, **1-3**
- ladder logic programs, **4-10**

specifications, **A-1**

starting group, **2-8**

status word, **5-2**

switches
- default settings, **2-2**
- locating, **2-2**
- setting, **2-3**
- SW1, **2-12**
- SW2, **2-8**
- SW3, **2-5**

T

technical support, **P-4**

termination resistor
- installing, **3-5**, **3-8**
- selecting, **3-2**

terms, **P-2**

tools, see equipment

Trip Fault Queue Number Read block transfer, **B-21**

Troubleshooting, **6-1**

W

Warning Command Write block transfer, **B-17**

Warning Queue Entry Read Full block transfer, **B-18**

website, **P-2**

Z

zero data, **2-10**

Artisan Scientific - Quality Instrumentation ... Guaranteed | (888) 88-SOURCE | www.artisan-scientific.com

Notes:

Artisan Scientific - Quality Instrumentation ... Guaranteed | (888) 88-SOURCE | www.artisan-scientific.com

1336 FORCE, 1336 IMPACT, 1336 PLUS II, DriveTools32, SCANport, PLC, PLC-2/30, PLC-3*, PLC-5,* PLC-5/15, PLC-5/20, PLC-5/25, PLC-5/40, PLC-5/40L, PLC-5/60, PLC-5/60L, PLC-5/80, PLC-5/250, *SLC,* SLC 500*, SMC Dialog Plus are trademarks of Rockwell Automation.*

Microsoft, Windows, and Windows NT are registered trademarks of Microsoft Corporation.

Artisan Scientific - Quality Instrumentation ... Guaranteed | (888) 88-SOURCE | www.artisan-scientific.com

www.rockwellautomation.com

Corporate Headquarters
Rockwell Automation, 777 East Wisconsin Avenue, Suite 1400, Milwaukee, WI, 53202-5302 USA, Tel: (1) 414.212.5200, Fax: (1) 414.212.5201

Headquarters for Allen-Bradley Products, Rockwell Software Products and Global Manufacturing Solutions
Americas: Rockwell Automation, 1201 South Second Street, Milwaukee, WI 53204-2496 USA, Tel: (1) 414.382.2000, Fax: (1) 414.382.4444
Europe: Rockwell Automation SA/NV, Vorstlaan/Boulevard du Souverain 36-BP 3A/B, 1170 Brussels, Belgium, Tel: (32) 2 663 0600, Fax: (32) 2 663 0640
Asia Pacific: Rockwell Automation, 27/F Citicorp Centre, 18 Whitfield Road, Causeway Bay, Hong Kong, Tel: (852) 2887 4788, Fax: (852) 2508 1846

Headquarters for Dodge and Reliance Electric Products
Americas: Rockwell Automation, 6040 Ponders Court, Greenville, SC 29615-4617 USA, Tel: (1) 864.297.4800, Fax: (1) 864.281.2433
Europe: Rockwell Automation, Brühlstraße 22, D-74834 Elztal-Dallau, Germany, Tel: (49) 6261 9410, Fax: (49) 6261 1774
Asia Pacific: Rockwell Automation, 55 Newton Road, #11-01/02 Revenue House, Singapore 307987, Tel: (65) 351 6723, Fax: (65) 355 1733

Publication 1203-5.16 – August, 2006
Supercedes 1203-5.16 – February, 2002

P/N 194690 Rev03
Copyright (C) 2006 Rockwell Automation. All rights reserved. Printed in USA.

Artisan Scientific - Quality Instrumentation ... Guaranteed | (888) 88-SOURCE | www.artisan-scientific.com

Artisan Scientific
QUALITY INSTRUMENTATION ... GUARANTEED

Looking for more information?

Visit us on the web at **http://www.artisan-scientific.com** for more information:

- Price Quotations • Drivers • Technical Specifications, Manuals and Documentation

Artisan Scientific is Your Source for Quality New and Certified-Used/Pre-owned Equipment

- Tens of Thousands of In-Stock Items
- Hundreds of Manufacturers Supported
- Fast Shipping and Delivery
- Leasing / Monthly Rentals
- Equipment Demos
- Consignment

Service Center Repairs

Experienced Engineers and Technicians on staff in our State-of-the-art Full-Service In-House Service Center Facility

InstraView™ Remote Inspection

Remotely inspect equipment before purchasing with our Innovative InstraView™ website at **http://www.instraview.com**

We buy used equipment! We also offer credit for Buy-Backs and Trade-Ins

Sell your excess, underutilized, and idle used equipment. Contact one of our Customer Service Representatives today!

Talk to a live person: 888-88-SOURCE (888-887-6872) | Contact us by email: sales@artisan-scientific.com | Visit our website: http://www.artisan-scientific.com