ARTISAN®
TECHNOLOGY GROUP

Your **definitive** source for quality pre-owned equipment.

Artisan Technology Group
(217) 352-9330 | sales@artisantg.com | artisantg.com

Full-service, independent repair center
with experienced engineers and technicians on staff.

We buy your excess, underutilized, and idle equipment
along with credit for buybacks and trade-ins.

Custom engineering
so your equipment works exactly as you specify.

- Critical and expedited services
- In stock / Ready-to-ship
- Leasing / Rentals / Demos
- ITAR-certified secure asset solutions

Expert team | Trust guarantee | 100% satisfaction

All trademarks, brand names, and brands appearing herein are the property of their respective owners.

Find the *Aeroflex / Tektronix / CDS 53B* at our website: *Click HERE*

53A-570 DIGITAL/SYNCHRO CARD
OPERATING MANUAL

© Copyright 1990 by
Colorado Data Systems, Inc.
Englewood, CO 80110
All rights reserved.

Printed in U.S.A.

01/29/90 8707-04-A
through
8911-06-C

WARRANTY

Colorado Data Systems, Inc. (CDS) products (hardware and firmware) are warranted against defects in materials and workmanship, and are warranted to meet the performance specifications as listed in the current catalog and/or data sheet for the specific product being warranted. This warranty applies for **three (3) years** following the date of shipment. CDS will, at its option, repair or replace, at no cost to the customer, products which prove to be defective during the warranty period, provided the defect or failure is not due to misuse or abuse of the product. The customer is responsible for shipment of the defective product to the CDS factory. Software products are supplied on a site license basis subject to the same performance warranty provisions; the materials and distribution provision applies to the distribution media only. NO OTHER WARRANTY IS EXPRESSED OR IMPLIED, INCLUDING WARRANTY FOR FITNESS OF PURPOSE. CDS SHALL, IN NO CASE, BE LIABLE FOR CONSEQUENTIAL DAMAGES.

53A-570 DIGITAL/SYNCHRO CARD

OPERATING MANUAL

DESCRIPTION 1

CONTROLS AND INDICATORS
- Address-Select Switch 1
- Power LED 1
- Fuses 1
- Function LEDS and Switches 2
- Front Edge Connector Inputs And Outputs 3
  - Synchro-Analog Outputs 3
  - AC Reference Inputs 3
  - External +15V and -15V DC Inputs 3

SPECIFICATIONS 4

OPERATION
- Overview 6
- Card Commands 6
- Synchro Output Polarity Convention 7

INSTALLATION 8

APPENDIX A
- 53/63 SERIES SYSTEM COMMANDS 9

APPENDIX B
- INPUT/OUTPUT CONNECTIONS 10

53A-570 DIGITAL/SYNCHRO CARD

DESCRIPTION

The 53A-570 Digital/Synchro Card is a printed circuit board assembly for use in a CDS 53/63 Series System. The 53A-570 Card contains one or two programmable 16-bit digital-to-synchro converters with associated Scott T transformers. Each channel can be independently programmed from 0° to 359.9999° in steps of 0.034°. The 53A-570 is programmed by transmitting ASCII characters from the system controller to the 53/63 Series System. The ASCII characters transmitted (0.000000 to 0.999999) represent the desired synchro-analog output angle as a fraction of 360°.

CONTROLS AND INDICATORS

The following controls and indicators are provided to select and display the functions of the 53A-570 Card's operating environment.

Address-Select Switch

The 53A-570 Card has a miniature 10-position switch labeled "ADDRESS" that selects the 53A-570 Card's address (0-9) in the 53/63 Series System. The switch's cover opens to allow the address to be reselected. A screwdriver with a narrow, flat blade should be used to turn the cam-action wiper to the desired address position.

Power LED

The Power LED provides a valuable diagnostic tool by giving the system programmer a visual indication of the action which the system is currently taking. Whenever the 53A-570 is addressed by the system controller, the Power LED goes out. The LED remains out until another function card is addressed. Since only one function card can be addressed at a time, an unlit Power LED indicates the function card with which the system controller is currently communicating. The Power LED being lit not only indicates that the 53A-570 Card is unaddressed, but that all required dc power (5V dc, ±15V dc) is being supplied.

Fuses

The 5V DC, +15V DC and -15V DC power buses each have a fuse that protects the system from overloads. If a fuse has blown, the Power LED will not light.

NOTE: Due to the inrush current caused during power-up, there is a limit of 11 channels of resolvers or synchros allowed per card cage, unless an external supply is provided for the ±15 volts DC.

For those applications that call for external power, the 53A-570 Card has provisions for connecting an external ±15V DC supply to the card's front-edge connector. To connect an external supply, the standard ±15V fuses must be removed from their locations next to the Address Select Switch and relocated at optional fuse positions at the bottom of the card near the front-edge connector. The pin assignments for the front-edge connector are: +15V Pins 23 and 24; -15V Pins AA and BB, Ground pins A through Z.

CAUTION:

If optional fuses are to be used, the fuses next to the Address Select switch must be removed to prevent damage to the internal ±15V DC supplies.

Function LEDS and Switches

LEDs

The following LEDs are provided at the top front edge of the 53A-570 Card to indicate the status of the card's operation:

Quadrant LEDs

Each channel has four quadrant LEDs, labeled QD1, QD2, QD3, and QD4. The quadrant LEDs for a channel indicate the last quadrant programmed for that channel. When the 53/63 Series system powers up, the Quadrant LEDs are unlit. They remain unlit until a channel is programmed. The LEDs represent the following quadrants:

QD1	0.0000°	-	89.9999°
QD2	90.0000°	-	179.9999°
QD3	180.0000°	-	269.9999°
QD4	270.0000°	-	359.9999°

Switches

The following switches are provided to select the proper functions for the 53A-570 Card's operating environment:

Halt Switch

This two-position slide switch is located near the card's backplane edge connector. It selects the state of the 53A-570 Card after an @XH (Halt) or STOP command is received by the 53/63 Series System.

a. If the Halt Switch is in the ON position, then the 53A-570 Card is reset to its power-up state, all parameters are reset to their default values, and the Power LED is lit.

b. If the Halt Switch is in the OFF position, then the 53A-570 Card becomes unaddressed, the Power LED is lit, and any programmed parameters of the card remain unchanged.

Synchro/Resolver Switch

Each channel has a two-section rocker switch that configures the channels for synchro or resolver output. Both rocker switches must be set to position C2 for correct operation of the 53A-570 Card. Position C1 is only used when the card has been factory configured for resolver output.

Front Edge Connector Inputs And Outputs

Synchro-Analog Outputs

Each channel has three synchro-analog outputs that represent the programmed angular value in synchro format.

AC Reference Inputs

Each channel has an independent AC reference input (Ref HI and Ref LO) that provides the reference frequency for the synchro-analog outputs.

The polarity conventions for the synchro analog outputs and AC reference outputs are as follows. S1, S2, and S3 are the synchro-analog outputs; R_{HI} and R_{LO} are the AC reference inputs, high and low, respectively. 0 represents the position of the synchro shaft.

$$S3\text{-}S1 = (R_{HI}\text{-}R_{LO}) \sin 0$$
$$S2\text{-}S3 = (R_{HI}\text{-}R_{LO}) \sin (0 + 120°)$$
$$S1\text{-}S2 = (R_{HI}\text{-}R_{LO}) \sin (0 + 240°)$$

S3-S1 will be in phase with R_{HI}-R_{LO} when sin 0 is positive, and 180 degrees out of phase with R_{HI}-R_{LO} when sin 0 is negative.

S2-S3 will be in phase with R_{HI}-R_{LO} when sin (0 + 120°) is positive, and 180 degrees out of phase with R_{HI}-R_{LO} when sin (0 + 120°) is negative.

S1-S2 will be in phase with R_{HI}-R_{LO} when sin (0 + 240°) is positive, and 180 degrees out of phase with R_{HI}-R_{LO} when sin (0 + 240°) is negative.

CAUTION:

It is recommended that if measuring the synchro outputs with an oscilloscope, the oscilloscope ground not be hooked to any of the outputs. Make a differential measurement with two channels of the oscilloscope instead. Although the outputs are isolated, and any one signal can be connected to ground, multiple outputs can accidentally be shorted causing severe damage to the card.

External +15V and -15V DC Inputs

A 53A-062 internal ±15V DC power supply can deliver 2 amperes to a 53A System chassis. A 53A-070 internal ±15V DC power supply can deliver 1.5 amperes to a 63A System chassis. Using multiple 53A-570 Cards or other function cards in the same system chassis that also require ±15V DC power may exceed the capacities of these supplies. You can determine the total amount of ±15V DC power required for a given card configuration using the data given in the Specifications section (Power Requirements) of each card's operating manual. If the system chassis demands additional power, external ±15V DC power can be applied through four pins on the 53A-570 Card's front edge connector (pins 23 and 24 for +15V DC, pins AA and BB for -15V DC) or directly to the card cage backplane. To connect external ±15V DC power to the card cage backplane, consult the factory for installation details.

CAUTION: See FUSES description above.

SPECIFICATIONS

Type Output:	Synchro, including Scott T transformer.
Number of Channels:	One digital to synchro converter channel standard. Second channel included when Option 001 is ordered.
Digital/Synchro Converter Manufacturer:	Natel model no. DSC 5101.
Significant Programming Digits:	Six decimal digits representing a fraction of 360°.
Accuracy:	2.5 arc-minutes (includes both D/S and Scott T transformer inaccuracies).
Resolution:	16 bits.
Frequency Range:	360 Hz to 440 Hz.
Reference Input:	Input voltage (RHI, RLO): 22V RMS to 30V RMS (26V RMS nominal).
	Input impedance: 25 kohms (minimum).
Output	
Output format:	Synchro.
Output voltages (V RMS, phase referenced to Ref Hi-Ref Lo)	S3-S1: 11.8 sin 0°, in phase. S2-S3: 11.8 sin (0 sin + 120°), in phase. S1-S2: 11.8 sin (0 sin + 240°), in phase.
Output current (maximum per channel):	2 Volt amperes.
Programmed By:	ASCII characters.
Power Requirements:	5V and ±15V dc power is provided by the internal Power Supply in the 53/63 Series Card Cage.
Voltage (5-volt Supply):	4.75 V dc to 5.25 V dc.
Current (5-volt Supply):	0.75 A, maximum quiescent, two channels. 0.80 A, peak, two channels.
Voltage (±15-volt Supplies):	+14.5 V dc to +15.5 V dc. -14.5 V dc to -15.5 V dc.
Current (+15-volt Supplies):	0.064 amperes per channel, no load. 0.165 amperes per channel, full load.

Current (-15V Supplies):	0.060 amperes per channel, no load. 0.160 amperes per channel, full load.
Cooling:	Provided by the fan in the 53/63 Card Cage.
Temperature:	-10°C to +65°C, operating (assumes ambient temperature of 55° and airflow to assure less than 10°C temperature rise). -40°C to +85°C, storage.
Humidity:	Less than 95% R.H. noncondensing, -10°C to +30°C. Less than 75% R.H. non-condensing, +31°C to +40°C. Less than 45% R.H. non-condensing, +41°C to +55°C.
Dimensions:	197 mm high, 220 mm deep, 13 mm wide. (7.5" x 8.66" x 0.8").
Dimensions, Shipping:	When ordered with a 53/63 Card Cage, the card is installed in one of the card cage's function-card slots. When ordered alone, the shipping dimensions are: 254 mm x 254 mm x 127 mm. (10" x 10" x 5").
Weight:	0.50 kg. (1.1 lbs).
Weight, Shipping:	When ordered with a 53/63 Card Cage, the card is installed in one of the card cage's function card slots. When ordered alone, the shipping weight is: 0.81 kg. (1.8 lbs).
Mounting Positions:	Any orientation.
Mounting Location:	Installs in any function card slot of the 53/63 Card Cage.
Input/Output Connections:	A 48-pin card-edge hooded connector (53A-780) connects to all front-edge input and output signals.
Required Equipment (not supplied):	53A-780 Hooded Connector or 53A-739 Analog Cable is required with this card.
Equipment Supplied:	53A-570 Digital/Synchro Card Spare Fuses (Part# 42202-52003) - Qty. 2. Operating Manual (Part# 00000-15700). Service Manual (Part# 00000-25700).

OPERATION

Overview

The 53A-570 Card is programmed by ASCII characters issued from the system controller to the 53/63 Series system communications card. The 53A-570 Card interfaces to the communications card through the 53 Series or 63 Series Card Cage's backplane.

When the 53/63 Series System powers up, the 53A-570 Card is unaddressed (power LED lit), and both channels are at 0°.

To address a function card for the first time, the system command @XY must be issued. X is the card cage address (0-9) selected on the 53A-171 Control Card in the addressed card cage; Y is the 53A-570 Card's address (0-9) within the addressed card cage. The 53A-570 Card's address is selected using the card's Address-select switch. Once a function card is addressed, it remains addressed until the system receives another @ character. Appendix A fully discusses the @XY command and the other 53/63 Series System commands. After the 53A-570 Card is addressed, the commands listed below may be issued until another function card is addressed.

Card Commands

The 53A-570 Card commands are as follows:

.zA	This command sets channel A to the output value specified by "Z", where z represents a one to six digit decimal number in the range 0 to 999999. With the period, this number represents a fraction of 360°. If z is not specified, the output value defaults to zero.
.zB	This command sets channel B to the output value specified by "Z", where z represents a one to six digit decimal number in the range 0 to 999999. With the period, this number represents a fraction of 360°. If z is not specified, the output value defaults to zero.

If less than six digits are sent after the period, the digits are interpreted as the most-significant digits of the fraction of 360°.

Below are examples of these commands:

Command	Action
@05.423A.985121B	Sets channel A to 152.28° (360° x .423), and channel B to 354.6435°. The 53A-570 Card address is mainframe 0, card address 5. The Power LED is out.
.A	Sets channel A to 0°. No new @XY command is detected by the system. If this command directly follows the previous example, the 53A-570 Card in mainframe 0, with address 5 is still addressed and processes the .A command. The Power LED is out.

@13.B.00145A	Sets channel B to 0°, and channel A to 9.522°. The 53A-570 Card address is mainframe 1, card address 3. The Power LED is out.

The following commands show invalid or missing characters:

@05 234A	The 53A-570 Card is addressed. Because of the missing decimal point, channel A is not changed. The Power LED is out.
@05.248T5A	The 53A-570 Card is addressed. The data string contains an invalid character (T, in this case). The character is ignored and treated as a 0. The channel A output is changed accordingly, and the Power LED is out.

Synchro Output Polarity Convention

The synchro voltage outputs, S3-S1, S2-S3, and S1-S2, resulting from an output of 0 in degrees, are found by the following equations:

S3-S1 = 11.8 sin 0 V RMS
S2-S3 = 11.8 sin (0 + 120°) V RMS
S1-S2 = 11.8 sin (0 + 240°) V RMS

As an example, for 0 = 246.3620 these voltages are:

S1-S3 = 10.81V RMS out of phase (with respect to R_{HI}-R_{LO})
S2-S3 = 1.31V RMS in phase (with respect to R_{HI}-R_{LO})
S1-S2 = 9.50V RMS in phase (with respect to R_{HI}-R_{LO})

Figure 1 shows the differential reference input and the three differential synchro outputs for this example. Note that all synchro outputs are always either in phase or 180 degrees out of phase with respect to the reference. The ratio between the amplitudes of the three differential outputs (not phase angle difference) determines the angular value represented by a synchro signal.

CAUTION: See the caution on page 570-3 of this manual if you choose to measure these outputs with an oscilloscope.

INSTALLATION

The 53A-570 Card is a function card; therefore, it may be plugged into any blue card slot. Setting the Address Select switch defines the card's programming address. To avoid confusion, it is recommended that the slot number and the programming address be the same.

CAUTION:

To avoid plugging the card in backwards, observe the following:

a. Match the keyed slot on the card to the key in the backplane connector. The component side should be to the right for a 53 Series Chassis and to the top for a 63 Series Chassis.

b. There are two ejectors on the card. Make sure the ejector marked "53A-570" is at the top for a 53 Series Chassis and to the left for a 63 Series Chassis.

CAUTION:

The 53A-570 Card is a piece of electronic equipment and therefore has some susceptibility to electrostatic damage (ESD). ESD precautions must be taken whenever the module is handled.

APPENDIX A

53/63 SERIES SYSTEM COMMANDS

Command	Description
@XY	The @XY (Address) command addresses a function card in the 53/63 Series System. @ is a delimiter used by the 53/63 Series System. X is a card cage address (0-9) defined by the Address Select switch on the 53A-171 Control Card in the addressed card cage. Y is a function-card address (0-9) defined by the Address Select switch on the function card. Once a card cage/function-card combination is addressed, it remains addressed until the 53/63 Series System detects a new @ character.
@XH	The @XH (Halt) command halts all function cards within the mainframe defined by X. The command does not affect function cards in other mainframes. How a function card reacts to the @XH command depends on the card. In all cases, if addressed (Power LED Out) the 53A-570 will become unaddressed (Power LED Lit) when a Halt command is received. On the 53A-570 Card, the position of the Halt switch causes the "@XH" command to have the following effect: If the Halt switch is ON, the 53A-570 Card resets to its power-up state; if the Halt switch is OFF, the 53A-570 Card is simply unaddressed.
STOP	The STOP command is not a string of ASCII characters. This command is hard-wired from the system controller to the 53/63 System's communications card in each card cage. When the system controller issues a STOP command, each function card (including the 53A-570 Card) reacts as if it had received the @XH command described above. How the system controller executes a STOP command depends on the communications card used. For example, when using the 53A-128 IEEE-488 Communications Card, a STOP command is executed whenever the system controller asserts the IEEE-488 bus line IFC (Interface Clear) true.

APPENDIX B

INPUT/OUTPUT CONNECTIONS

Pin No.	Function
1	S1 (synchro-analog output), channel A.
2	S2 (synchro-analog output), channel A.
3	S3 (synchro-analog output), channel A.
4	Reserved S4 (resolver) channel A.
5	RHI (reference input, high), channel A.
6	RLO (reference input, low), channel A.
10	S1 (synchro-analog output), channel B.
11	S2 (synchro-analog output), channel B.
12	S3 (synchro-analog output), channel B.
13	Reserved S4 (resolver) channel B.
14	RHI (reference input, high), channel B.
15	RLO (reference input, low), channel B.
23, 24	+15 VDC, External Power Supply Input.
A - Z	GROUND.
AA, BB	-15 VDC, External Power

SERVICE MANUAL

53A-570

DIGITAL SYNCHRO CONVERTER

Copyright 1989 Colorado Data Systems, Inc. All rights reserved.
Contents of this publication may not be reproduced in any
form without the written permission of Colorado Data Systems, Inc.

REFERENCE DESIGNATOR	CDS PART NUMBER	QTY.	PART DESCRIPTION	MFG. NUM.	MFG. PART NUMBER
C03	21018-15009	1	CAP FXD ELECT 150UF 75% -10% 16VDCW	0025	NLW150-16
C04,06,14,15,85,94,95,96	20128-10006	8	CAP FXD CER .1UF 20% 50VDCW	0058	C322C104M5U5CA
C07	22022-10008	1	CAP FXD TA 10UF 10-20% 20-25VDCW	0106	199D106X9025CA1
C66	20128-47006	1	CAP FXD CER .47UF 20% 50VDCW	0075	RPE123Z5U474M50V
C84	21528-33003	1	CAP FXD MICA 330PF 5% 100VDCW	0025	CD7CA331J03
C923,924,925,926,933,934,935,936	20128-10005	8	CAP FXD CER .01UF 20% 50VDCW	0106	1C25Z5U103M050B
C928,938	22022-20008	2	CAP FXD TA 22UF 10-20% 20-25VDCW	0106	199D226X9025CA1
CR533,534	32000-05260	2	DIODE ZENER 43V .5W 5%	0074	1N5260B
DS01	32000-00103	1	DIODE LIGHT EMITTING RED 50MA	0039	550-0103
DS011,012,013,014,015,016,017 018	32000-02003	8	DIODE LIGHT EMITTING RED WITH RESISTOR 0	0039	547-2003
E1	40401-00570	1	EJECTOR STAMP 53A-570 STYLE B BLUE	0026	40401-00570
E2	40401-10058	1	EJECTOR STAMP D-S STYLE D BLUE	0026	40401-10058
E3	45050-03293	1	DCL LED 8POS DRW 00000-00564	0026	45050-03293
E4	45050-03236	1	DCL LED 8POS BLK DRW 00000 -00473	0026	45050-03236
F07,971,972	42202-52001	3	FUSE SUB-MIN 2AMP	0061	251002
F501	42202-52125	1	FUSE SUB-MIN 1-8AMP	0061	251.125
F901,902	10000-00002	2	USER INSTALLED FUSE	0026	10000-00002
PCB	41530-57000	1	P.C. BOARD VERSION 4L 8911	0026	41530-57000
Q841,842	51100-03646	2	TRANSISTOR NPN HIGH SPEED SWITCH	0074	MPS3646
R07	10117-30004	1	3K RES COMP 1-4W 5%	0087	R25J-3K-5%

REFERENCE DESIGNATOR	CDS PART NUMBER	QTY.	PART DESCRIPTION	MFG. NUM.	MFG. PART NUMBER
R66	10117-22003	1	220 OHM RES COMP 1-4W 5%	0087	R25J-220-5%
R67,941,944,945,947	10117-10005	5	10K RES COMP 1-4W 5%	0087	R25J-10K-5%
R84	10117-33003	1	330 OHM RES COMP 1-4W 5%	0087	R25J-330-5%
R942	10117-62005	1	62K RES COMP 1-4W 5%	0087	R25J-62K-5%
R943	10117-22005	1	22K RES COMP 1-4W 5%	0087	R25J-22K-5%
R946	10117-91005	1	91K RES COMP 1-4W 5%	0087	R25J-91K-5%
S57	42050-10101	1	SWITCH DIP 1POS SPST	0093	JS-8794-01
S77	42050-10010	1	SWITCH 10POS.	0101	C42315-A61-A11
U03	79814-00022	1	PAL PROGRAMMED 16R8L REV A 53A-570 71 72 73	0026	79814-00022
U04	79813-00062	1	PROGRAMMED PROM U04 53A-570	0026	79813-00062
U05,36,57,66,86	76901-07402	5	IC TTL LS QUAD 2-INPUT NOR GATE	0107	74LS02
U06,84	76500-07410	2	IC TTL LS TRIPLE 3-INPUT NAND GATE	0107	74LS10
U07,87	78401-07414	2	IC TTL HEX SCHMITT INVERTING BUFFER	0107	7414
U15,77,85	77815-07432	3	IC TTL LS QUAD 2-INPUT OR GATE	0107	74LS32
U16,26	76510-07411	2	IC TTL ALS TRIPLE 3-INPUT AND GATE	0107	74ALS11
U17	76601-07438	1	IC TTL QUAD 2-INPUT NAND BUFFER W-OC	0107	7438
U24	79813-00063	1	PROGRAMMED PROM U24 53A-570	0026	79813-00063
U25,35,45,55,65,75	73001-74175	6	IC TTL LS QUAD D-TYPE FLIP-FLOP	0107	74LS175
U27,95	73301-07404	2	IC TTL LS HEX INVERTER	0107	74LS04
U30	20100-05101	1	DIGITAL TO SYNCHRO CONVERTER 0-	0248	DSC 5101-2335
U34,44,54,64	71256-74283	4	IC TTL LS 4-BIT FULL ADDER	0107	74LS283

REFERENCE DESIGNATOR	CDS PART NUMBER	QTY.	PART DESCRIPTION	MFG. NUM.	MFG. PART NUMBER
U37,47	73310-74244	2	IC TTL LS OCTAL BUFFER NON-INVERTING	0107	74LS244N
U46	71200-74161	1	IC TTL LS SYNCH 4-BIT COUNTER	0107	74LS161A
U56	79001-07442	1	IC TTL LS 4-LINE TO 10-LINE DECODER	0107	74LS42
U67,76	77203-07408	2	IC TTL ALS QUAD 2-INPUT AND GATE	0107	74ALS08
U74	79813-00064	1	PROGRAMMED PROM U74 53A-570	0026	79813-00064
U96,97	73001-07474	2	IC TTL LS DUAL D-TYPE EDGE TRIG FLIP-FLOP	0107	74LS74A
X01,02	45010-08100	2	SOCKET SIP 8 PIN	0032	CAS-08VSC-12B
X04,24,74	45012-24100	3	SOCKET 24-PIN DIP	0089	ICN-246-S5-G

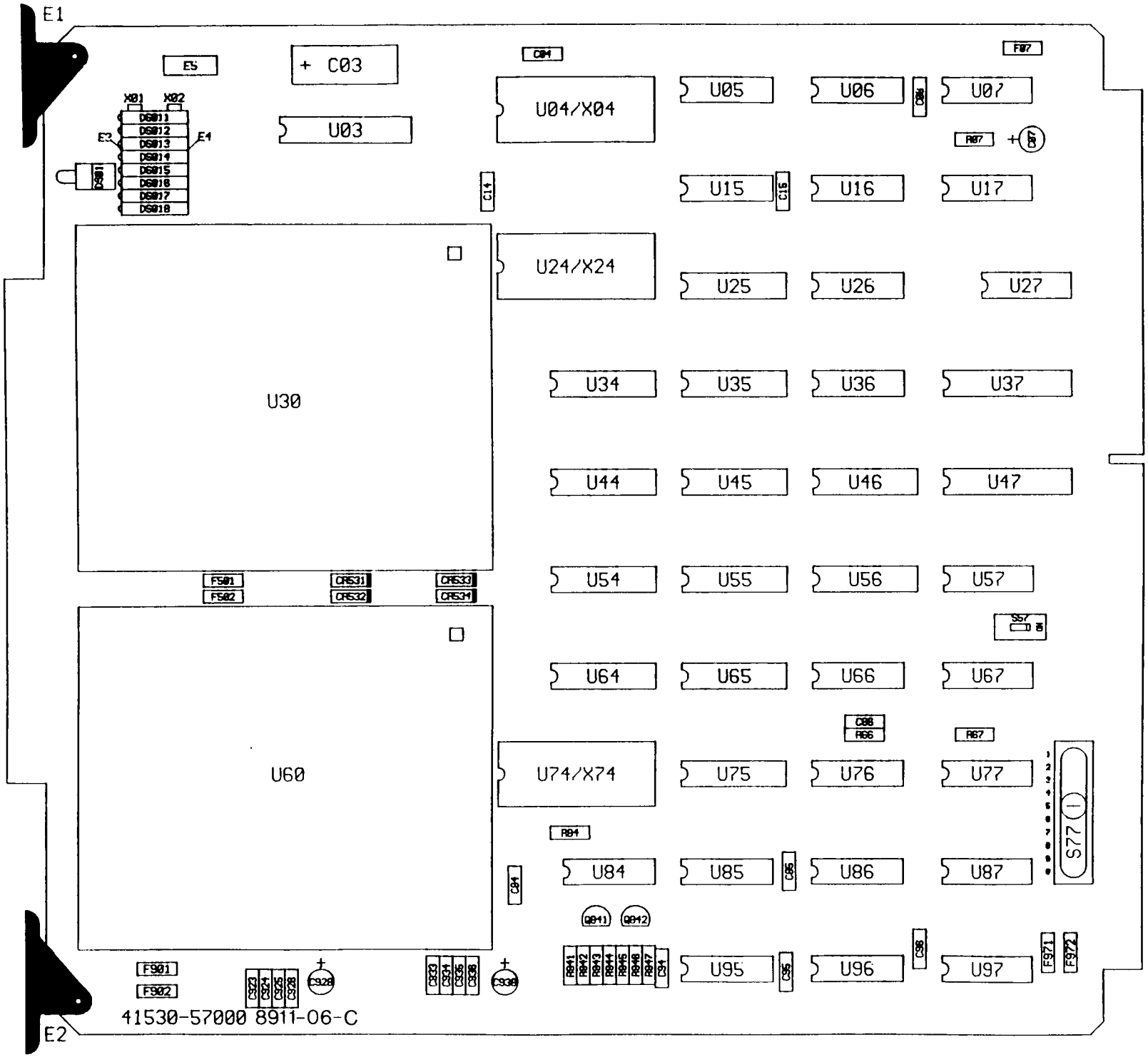
E1
E5
+ C03
C04
F07
X01
X02
DS011
DS012
DS013
DS014
DS015
DS016
DS017
DS018
E3
E4
DS01
U03
U04/X04
U05
U06
C06
U07
R07
C07
C14
U15
C15
U16
U17
U24/X24
U25
U26
U27
U30
U34
U35
U36
U37
U44
U45
U46
U47
F501
F502
CR531
CR532
CR533
CR534
U54
U55
U56
U57
S57
U64
U65
U66
U67
C66
R66
R67
U60
U74/X74
U75
U76
U77
S77
R84
U84
U85
C85
U86
U87
C84
Q841
Q842
R841
R842
R843
R844
R845
R846
R847
C84
U95
C95
U96
C96
U97
F971
F972
F901
F902
C923
C924
C925
C926
C928
C933
C934
C935
C936
C938
41530-57000 8911-06-C
E2

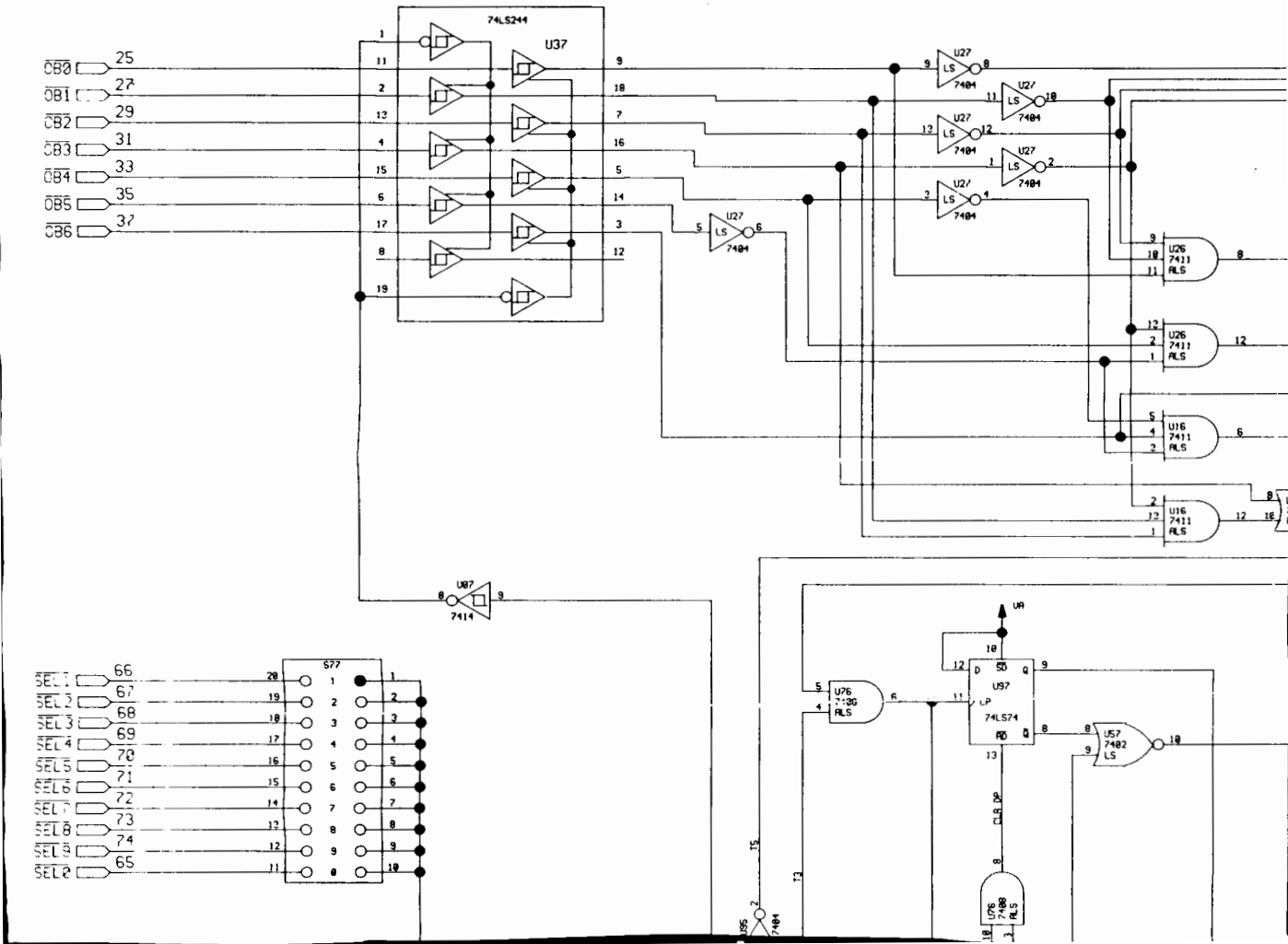
74LS244
U37
OB0
OB1
OB2
OB3
OB4
OB5
OB6
U27
LS
7404
U26
7411
ALS
U16
U07
7414
S77
SEL1
SEL2
SEL3
SEL4
SEL5
SEL6
SEL7
SEL8
SEL9
SEL0
U76
7408
ALS
U97
74LS74
U57
7402
LS
VA
CLR_DP

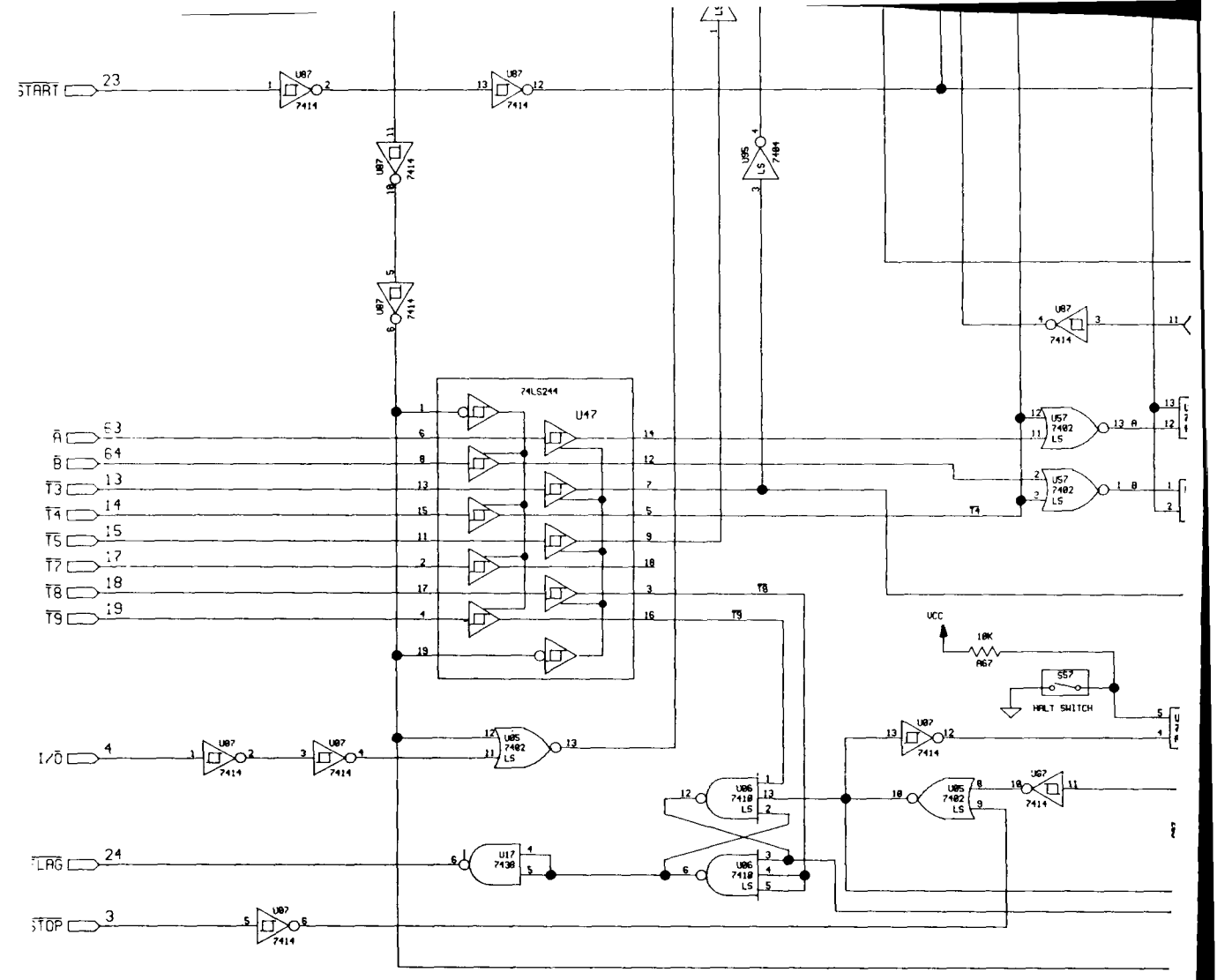
START
23
U87
7414
U95
LS
7404
74LS244
U47
A
B
T3
T4
T5
T7
T8
T9
63
64
13
14
15
17
18
19
I/O
4
U95
7402
LS
U57
7402
LS
VCC
10K
R67
S57
HALT SWITCH
U96
7410
LS
U17
7438
FLAG
24
STOP
3

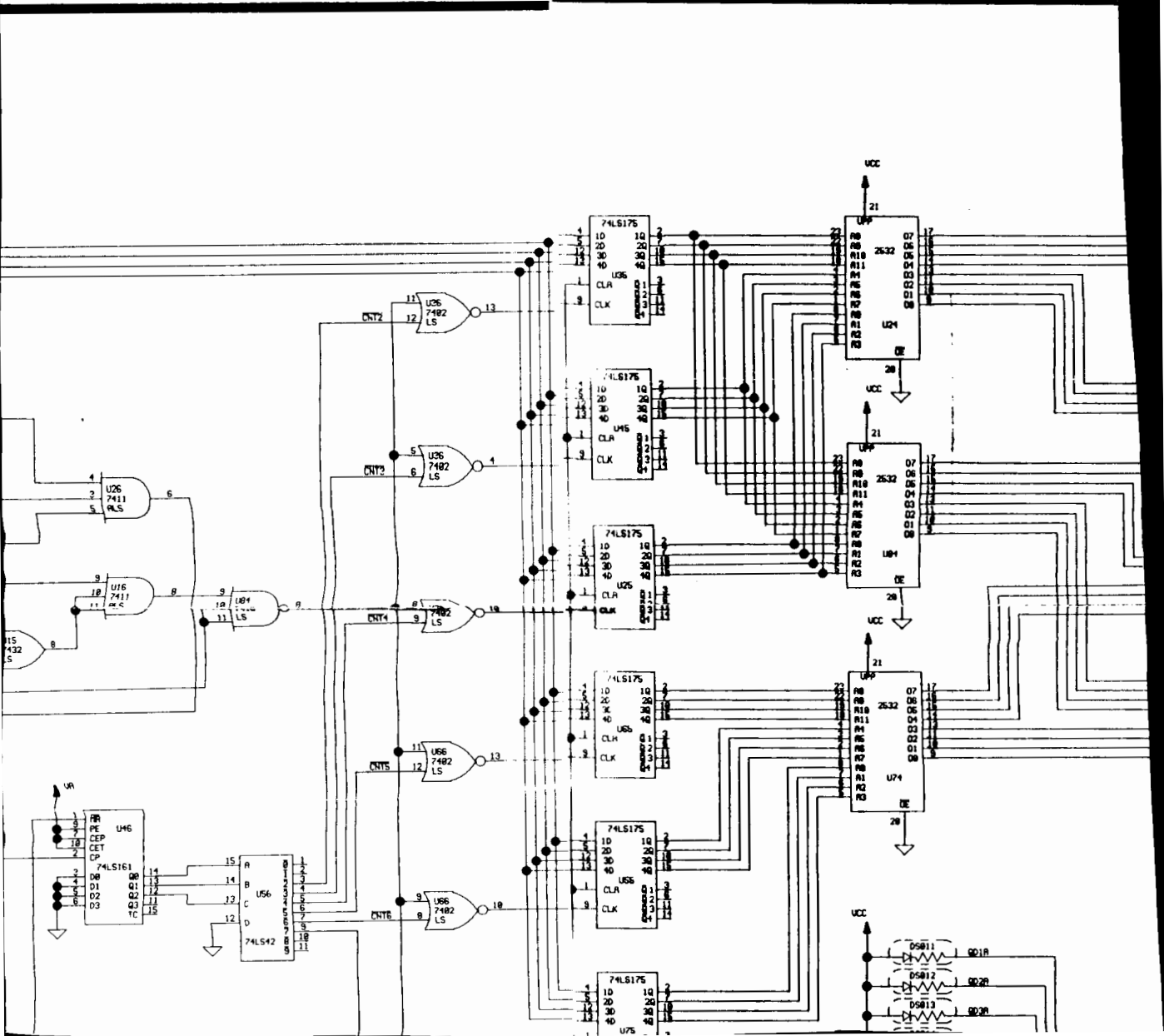
VCC
74LS175
U36
U46
U25
U66
U75
CLR
CLK
U26
7411
9LS
U16
7411
U84
LS
7402
U36
U46
U56
U66
CNT2
CNT3
CNT4
CNT5
CNT6
2532
U24
U34
U74
U84
DE
74LS161
U46
PE
CEP
CET
CP
D0
D1
D2
D3
Q0
Q1
Q2
Q3
TC
74LS42
U56
DS011
DS012
DS013
RD1A
RD2A
RD3A

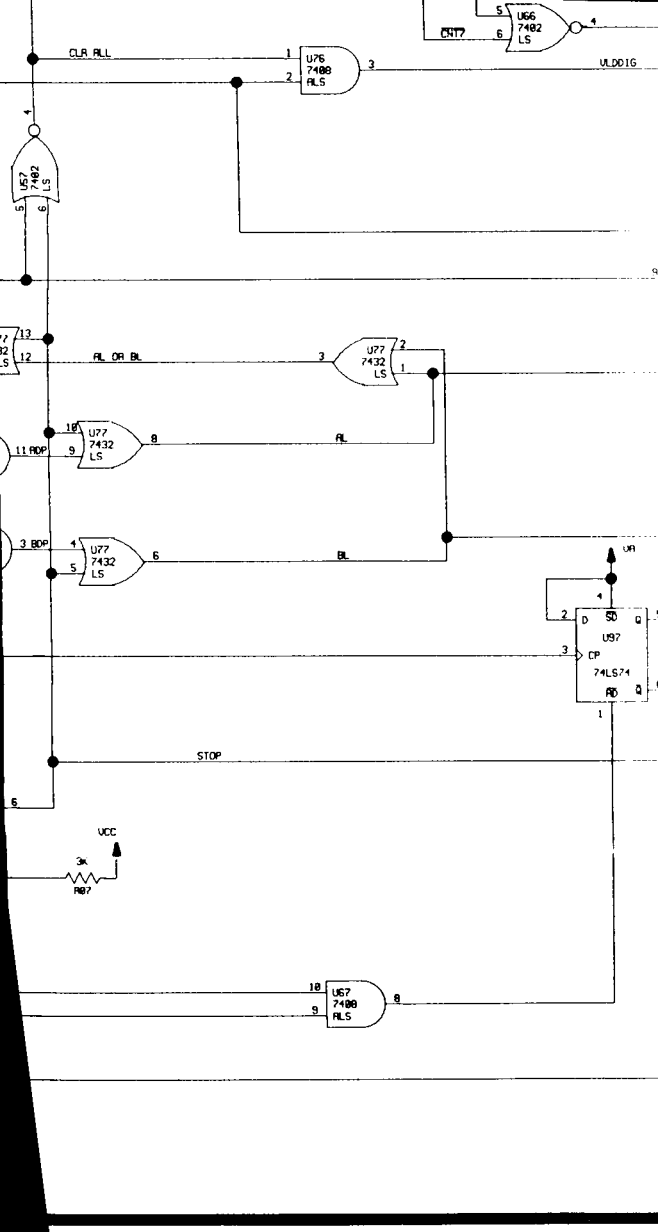
CLR ALL
U76
7408
ALS
ULDDIG
U66
7402
LS
CNT7
U57
7402
LS
AL OR BL
U77
7432
LS
AL
11 ADP
3 BDP
BL
U97
74LS74
STOP
VCC
3K
R07
U67
7408
ALS

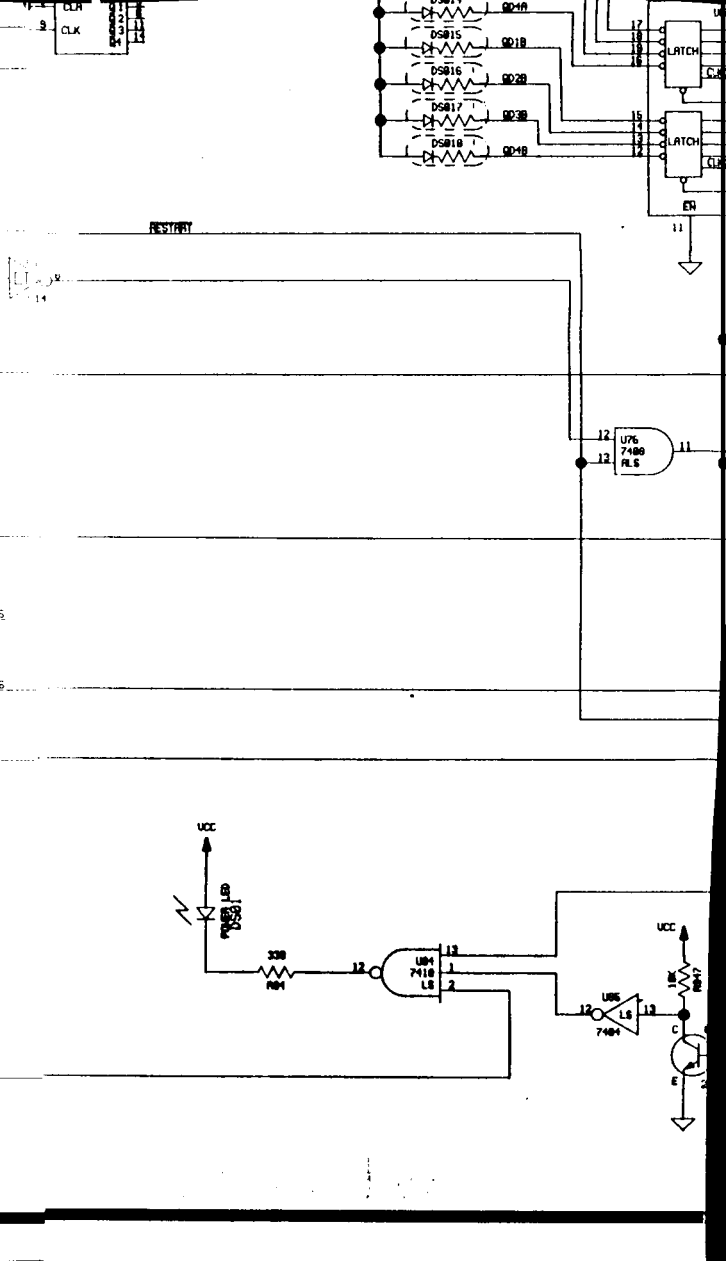
CLR
CLK
DS015
DS016
DS017
DS018
QD1A
QD1B
QD2B
QD3B
QD4B
LATCH
LATCH
EN
RESTART
U76
7400
ALS
VCC
330
R84
U84
7410
LS
U85
LS
7404
VCC
1K
R87
C
E

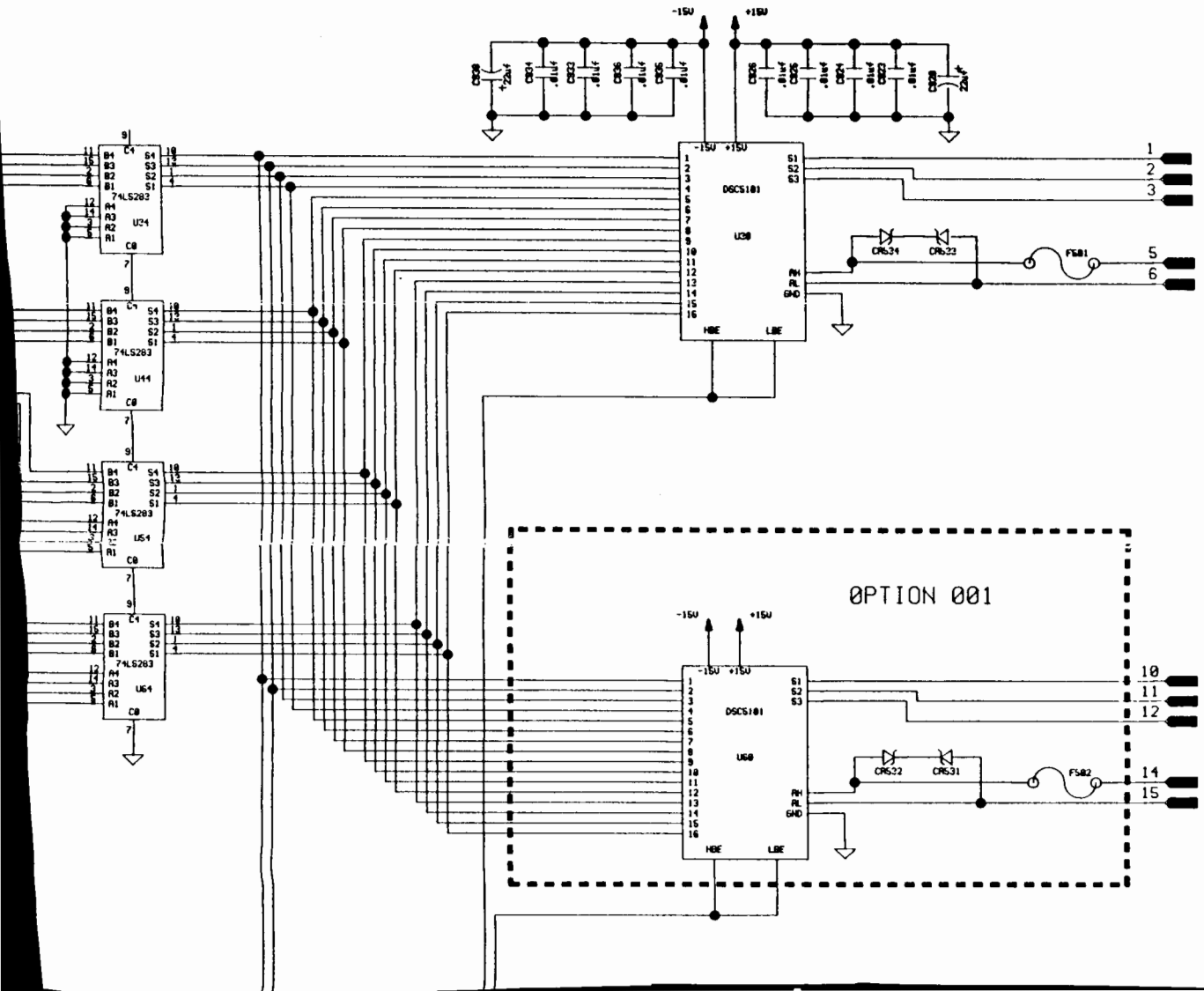
-15V
+15V
C30
22uf
C34
.01uf
C33
.01uf
C36
.01uf
C35
.01uf
C32
.01uf
C31
.01uf
C29
22uf
74LS283
U24
U44
U54
U64
DSCS101
U30
U60
CR634
CR633
CR632
CR631
F501
F502
HBE
LBE
GND
0PTION 001

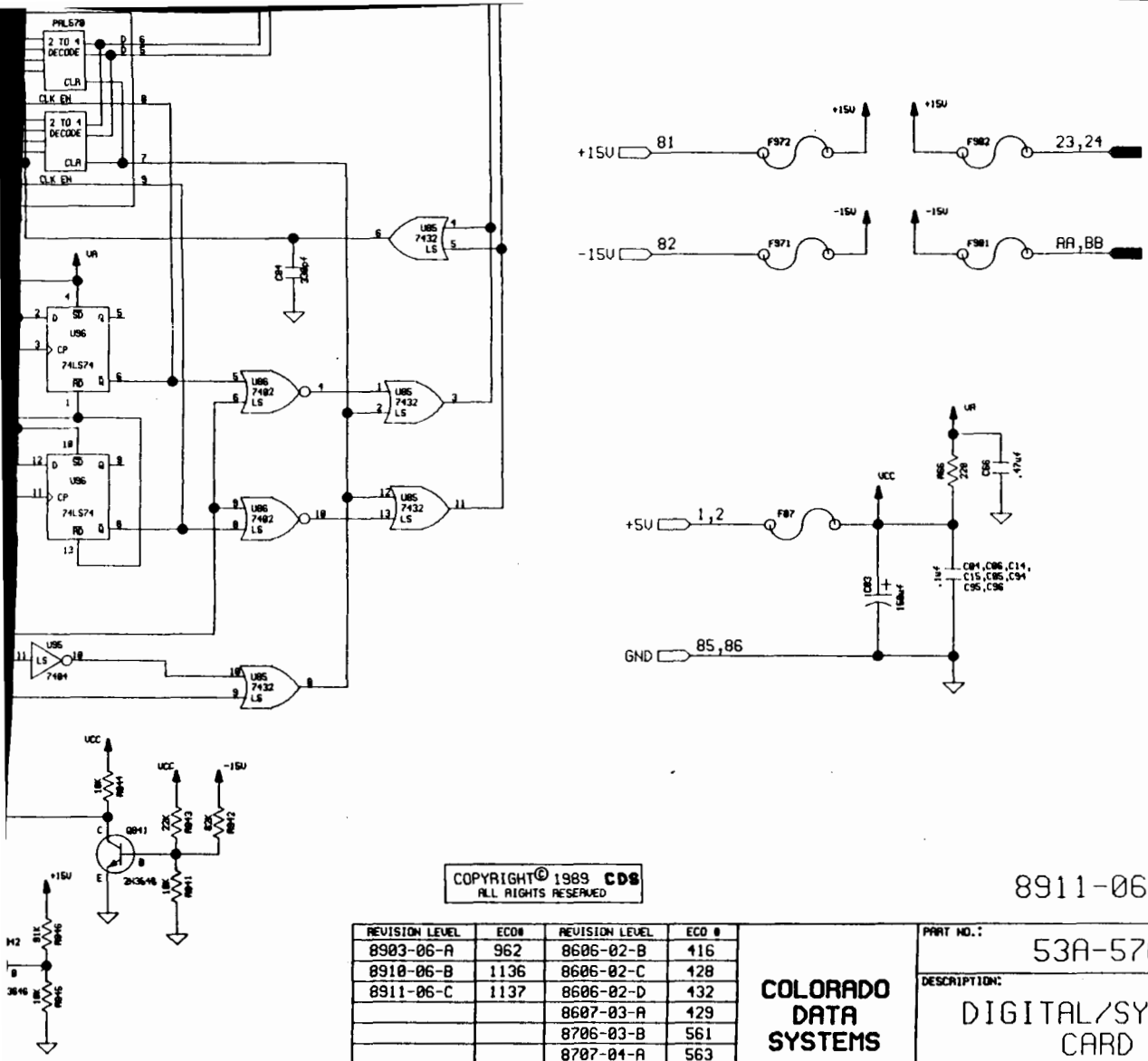

COPYRIGHT© 1989 CDS
ALL RIGHTS RESERVED

8911-06-C

REVISION LEVEL	ECO#	REVISION LEVEL	ECO #
8903-06-A	962	8606-02-B	416
8910-06-B	1136	8606-02-C	428
8911-06-C	1137	8606-02-D	432
		8607-03-A	429
		8706-03-B	561
		8707-04-A	563
		8707-04-B	729
		8707-05-A	961

COLORADO DATA SYSTEMS

PART NO.: 53A-570

DESCRIPTION: DIGITAL/SYNCHR CARD

P.C.B. NUMBER: 41530-57000

Artisan Technology Group is an independent supplier of quality pre-owned equipment

Gold-standard solutions

Extend the life of your critical industrial, commercial, and military systems with our superior service and support.

We buy equipment

Planning to upgrade your current equipment? Have surplus equipment taking up shelf space? We'll give it a new home.

Learn more!

Visit us at **artisantg.com** for more info on price quotes, drivers, technical specifications, manuals, and documentation.

Artisan Scientific Corporation dba Artisan Technology Group is not an affiliate, representative, or authorized distributor for any manufacturer listed herein.

We're here to make your life easier. How can we help you today?

(217) 352-9330 | sales@artisantg.com | artisantg.com

ARTISAN® TECHNOLOGY GROUP