Artisan Technology Group

Artisan Technology Group is your source for quality new and certified-used/pre-owned equipment

- FAST SHIPPING AND DELIVERY
- TENS OF THOUSANDS OF IN-STOCK ITEMS
- EQUIPMENT DEMOS
- HUNDREDS OF MANUFACTURERS SUPPORTED
- LEASING/MONTHLY RENTALS
- ITAR CERTIFIED SECURE ASSET SOLUTIONS

SERVICE CENTER REPAIRS
Experienced engineers and technicians on staff at our full-service, in-house repair center

InstraView℠ REMOTE INSPECTION
Remotely inspect equipment before purchasing with our interactive website at ***www.instraview.com*** ↗

WE BUY USED EQUIPMENT
Sell your excess, underutilized, and idle used equipment
We also offer credit for buy-backs and trade-ins
www.artisantg.com/WeBuyEquipment ↗

LOOKING FOR MORE INFORMATION?
Visit us on the web at ***www.artisantg.com*** ↗ for more information on price quotations, drivers, technical specifications, manuals, and documentation

Contact us: (888) 88-SOURCE | sales@artisantg.com | www.artisantg.com

USER'S GUIDE
Dynamic Measurement DC Source
Agilent Model 66312A
System DC Power Supply
Agilent 6611C, 6612C, 6613C and 6614C

Agilent Technologies

Agilent Part No. 5962-8194

Microfiche No. 5962-8195

Printed in Malaysia: March 2004

Artisan Technology Group - Quality Instrumentation ... Guaranteed | (888) 88-SOURCE | www.artisantg.com

Warranty Information

CERTIFICATION

Agilent Technologies certifies that this product met its published specifications at time of shipment from the factory. Agilent Technologies further certifies that its calibration measurements are traceable to the United States National Bureau of Standards, to the extent allowed by the Bureau's calibration facility, and to the calibration facilities of other International Standards Organization members.

WARRANTY

This Agilent Technologies hardware product is warranted against defects in material and workmanship for a period of one year from date of delivery. Agilent software and firmware products, which are designated by Agilent for use with a hardware product and when properly installed on that hardware product, are warranted not to fail to execute their programming instructions due to defects in material and workmanship for a period of 90 days from date of delivery. During the warranty period Agilent Technologies will, at its option, either repair or replace products which prove to be defective. Agilent does not warrant that the operation for the software firmware, or hardware shall be uninterrupted or error free.

For warranty service, with the exception of warranty options, this product must be returned to a service facility designated by Agilent. Customer shall prepay shipping charges by (and shall pay all duty and taxes) for products returned to Agilent for warranty service. Except for products returned to Customer from another country, Agilent shall pay for return of products to Customer.

Warranty services outside the country of initial purchase are included in Agilent's product price, only if Customer pays Agilent international prices (defined as destination local currency price, or U.S. or Geneva Export price).

If Agilent is unable, within a reasonable time to repair or replace any product to condition as warranted, the Customer shall be entitled to a refund of the purchase price upon return of the product to Agilent.

LIMITATION OF WARRANTY

The foregoing warranty shall not apply to defects resulting from improper or inadequate maintenance by the Customer, Customer-supplied software or interfacing, unauthorized modification or misuse, operation outside of the environmental specifications for the product, or improper site preparation and maintenance. NO OTHER WARRANTY IS EXPRESSED OR IMPLIED. AGILENT SPECIFICALLY DISCLAIMS THE IMPLIED WARRANTIES OF MERCHANTABILITY AND FITNESS FOR A PARTICULAR PURPOSE.

EXCLUSIVE REMEDIES

THE REMEDIES PROVIDED HEREIN ARE THE CUSTOMER'S SOLE AND EXCLUSIVE REMEDIES. AGILENT SHALL NOT BE LIABLE FOR ANY DIRECT, INDIRECT, SPECIAL, INCIDENTAL, OR CONSEQUENTIAL DAMAGES, WHETHER BASED ON CONTRACT, TORT, OR ANY OTHER LEGAL THEORY.

ASSISTANCE

The above statements apply only to the standard product warranty. Warranty options, extended support contacts, product maintenance agreements and customer assistance agreements are also available. Contact your nearest Agilent Technologies Sales and Service office for further information on Agilent's full line of Support Programs.

Artisan Technology Group - Quality Instrumentation ... Guaranteed | (888) 88-SOURCE | www.artisantg.com

Safety Summary

The following general safety precautions must be observed during all phases of operation of this instrument. Failure to comply with these precautions or with specific warnings elsewhere in this manual violates safety standards of design, manufacture, and intended use of the instrument. Agilent Technologies assumes no liability for the customer's failure to comply with these requirements.

GENERAL

This product is a Safety Class 1 instrument (provided with a protective earth terminal). The protective features of this product may be impaired if it is used in a manner not specified in the operation instructions.
Any LEDs used in this product are Class 1 LEDs as per IEC 825-1.
This ISM device complies with Canadian ICES-001. Cet appareil ISM est conforme à la norme NMB-001 du Canada.

ENVIRONMENTAL CONDITIONS

This instrument is intended for indoor use in an installation category II, pollution degree 2 environment. It is designed to operate at a maximum relative humidity of 95% and at altitudes of up to 2000 meters. Refer to the specifications tables for the ac mains voltage requirements and ambient operating temperature range.

BEFORE APPLYING POWER

Verify that the product is set to match the available line voltage, the correct fuse is installed, and all safety precautions are taken. Note the instrument's external markings described under "Safety Symbols".

GROUND THE INSTRUMENT

To minimize shock hazard, the instrument chassis and cover must be connected to an electrical ground. The instrument must be connected to the ac power mains through a grounded power cable, with the ground wire firmly connected to an electrical ground (safety ground) at the power outlet. Any interruption of the protective (grounding) conductor or disconnection of the protective earth terminal will cause a potential shock hazard that could result in personal injury.

ATTENTION: Un circuit de terre continu est essentiel en vue du fonctionnement sécuritaire de l'appareil. Ne jamais mettre l'appareil en marche lorsque le conducteur de mise … la terre est d,branch,.

FUSES

Only fuses with the required rated current, voltage, and specified type (normal blow, time delay, etc.) should be used. Do not use repaired fuses or short-circuited fuseholders. To do so could cause a shock or fire hazard.

DO NOT OPERATE IN AN EXPLOSIVE ATMOSPHERE

Do not operate the instrument in the presence of flammable gases or fumes.

DO NOT REMOVE THE INSTRUMENT COVER

Operating personnel must not remove instrument covers. Component replacement and internal adjustments must be made only by qualified service personnel.

Instruments that appear damaged or defective should be made inoperative and secured against unintended operation until they can be repaired by qualified service personnel.

Artisan Technology Group - Quality Instrumentation ... Guaranteed | (888) 88-SOURCE | www.artisantg.com

SAFETY SYMBOLS

⎓	Direct current
∼	Alternating current
≂	Both direct and alternating current
3∼	Three-phase alternating current
⏚	Earth (ground) terminal
⏚	Protective earth (ground) terminal
⏚	Frame or chassis terminal
⊥	Terminal is at earth potential. Used for measurement and control circuits designed to be operated with one terminal at earth potential.
N	Terminal for Neutral conductor on permanently installed equipment
L	Terminal for Line conductor on permanently installed equipment
I	On (supply)
O	Off (supply)
⏻	Standby (supply). Units with this symbol are not completely disconnected from ac mains when this switch is off. To completely disconnect the unit from ac mains, either disconnect the power cord or have a qualified electrician install an external switch.
▭	In position of a bi-stable push control
□	Out position of a bi-stable push control
⚠	Caution, risk of electric shock
⚠	Caution, hot surface
⚠	Caution (refer to accompanying documents)
WARNING	The WARNING sign denotes a hazard. It calls attention to a procedure, practice, or the like, which, if not correctly performed or adhered to, could result in personal injury. Do not proceed beyond a WARNING sign until the indicated conditions are fully understood and met.
Caution	The CAUTION sign denotes a hazard. It calls attention to an operating procedure, or the like, which, if not correctly performed or adhered to, could result in damage to or destruction of part or all of the product. Do not proceed beyond a CAUTION sign until the indicated conditions are fully understood and met.

Artisan Technology Group - Quality Instrumentation ... Guaranteed | (888) 88-SOURCE | www.artisantg.com

Agilent Technologies	**DECLARATION OF CONFORMITY** According to ISO/IEC Guide 22 and CEN/CENELEC EN 45014	CE

Manufacturer's Name and Address

Responsible Party
Agilent Technologies, Inc.
550 Clark Drive, Suite 101
Budd Lake, New Jersey 07828
USA

Alternate Manufacturing Site
Agilent Technologies (Malaysia) Sdn. Bhd
Malaysia Manufacturing
Bayan Lepas Free Industrial Zone, PH III
11900 Penang,
Malaysia

Declares under sole responsibility that the product as originally delivered

Product Names a) Mobile Communications DC Source
b) System DC Power Supply

Model Numbers a) 66332A, 66312A, 66311B, 66311D
66309B, 66309D, 66319B, 66319D, 66321B, 66321D
b) 6631B, 6632B, 6633B, 6634B 6611C
6612C, 6613C, 6614C

Product Options This declaration covers all options and customized products based on the above products.

Complies with the essential requirements of the Low Voltage Directive 73/23/EEC and the EMC Directive 89/336/EEC (including 93/68/EEC) and carries the CE Marking accordingly.

EMC Information ISM Group 1 Class A Emissions

As detailed in Electromagnetic Compatibility (EMC), Certificate of Conformance Number CC/TCF/00/030 based on Technical Construction File (TCF) HPNJ8, dated Apr. 25, 2000

Assessed by: Celestica Ltd, Appointed Competent Body
Westfields House, West Avenue
Kidsgrove, Stoke-on-Trent
Straffordshire, ST7 1TL
United Kingdom

Safety Information and Conforms to the following safety standards.

IEC 61010-1:2001 / EN 61010-1:2001
Canada: CSA C22.2 No. 1010.1:1992
UL 61010B-1: 2003

This DoC applies to above-listed products placed on the EU market after:

January 1, 2004
Date

Bill Darcy
Bill Darcy/ Regulations Manager

For further information, please contact your local Agilent Technologies sales office, agent or distributor, or *Agilent Technologies Deutschland GmbH, Herrenberger Straße 130, D71034 Böblingen, Germany*

Revision: B.00.00 Issue Date: Created on 11/24/2003 3:14 PM Document No. Eagle.11.24.doc

To obtain the latest Declaration of Conformity, go to http://regulations.corporate.agilent.com and click on "Declarations of Conformity."

Artisan Technology Group - Quality Instrumentation ... Guaranteed | (888) 88-SOURCE | www.artisantg.com

Acoustic Noise Information

Herstellerbescheinigung

Diese Information steht im Zusammenhang mit den Anforderungen der Maschinenläminformationsverordnung vom 18 Januar 1991.

* Schalldruckpegel Lp <70 dB(A)
* Am Arbeitsplatz
* Normaler Betrieb
* Nach EN 27779 (Typprüfung).

Manufacturer's Declaration

This statement is provided to comply with the requirements of the German Sound Emission Directive, from 18 January 1991.

* Sound Pressure Lp <70 dB(A)
* At Operator Position
* Normal Operation
* According to EN 27779 (Type Test).

Printing History

The edition and current revision of this manual are indicated below. Reprints of this manual containing minor corrections and updates may have the same printing date. Revised editions are identified by a new printing date. A revised edition incorporates all new or corrected material since the previous printing date.

Changes to the manual occurring between revisions are covered by change sheets shipped with the manual. In some cases, the manual change applies only to specific instruments. Instructions provided on the change sheet will indicate if a particular change applies only to certain instruments.

This document contains proprietary information protected by copyright. All rights are reserved. No part of this document may be photocopied, reproduced, or translated into another language without the prior consent of Agilent Technologies. The information contained in this document is subject to change without notice.

© Copyright 1997 Agilent Technologies

Edition 1 _____November, 1997
Update 1 _____July, 1999
Update 2 _____January, 2000
Update 3 _____March, 2004

Artisan Technology Group - Quality Instrumentation ... Guaranteed | (888) 88-SOURCE | www.artisantg.com

Table of Contents

Warranty Information 2
Safety Summary 3
Declaration Page 5
Acoustic Noise Information 6
Printing History 6
Table of Contents 7

1 - QUICK REFERENCE 9
Agilent 66312A Dynamic Measurement DC Source and Agilent 6611C/6612C/6613C/6614C System DC Power Supply 9
The Front Panel - At a Glance 10
Front Panel Number Entry 11
Front Panel Annunciators 12
Immediate Action Keys 12
Front Panel Menus - At a Glance 13
SCPI Programming Commands - At a Glance 14
The Rear Panel - At a Glance 15

2 - GENERAL INFORMATION 17
Document Orientation 17
Safety Considerations 18
Options and Accessories 18
Description 19
Capabilities 19
Front Panel Controls 19
Remote Programming 19
Output Characteristic 20

3 - INSTALLATION 21
Inspection 21
Damage 21
Packaging Material 21
Items Supplied 21
Cleaning 21
Location 22
Bench Operation 22
Rack Mounting 22
Input Connections 23
Connect the Power Cord 23
Output Connections 23
Wire Considerations 23
Current Ratings 23
Voltage Drops 24
Multiple Load Connections 24
Remote Sense Connections 25
Sense Leads 25
Stability 26
OVP Considerations 26
INH/FLT Connections 26
Controller Connections 28
GPIB Interface 28
RS-232 Interface 29

Artisan Technology Group - Quality Instrumentation ... Guaranteed | (888) 88-SOURCE | www.artisantg.com

4 - TURN-ON CHECKOUT 31
Introduction 31
Using the Keypad 31
Checkout Procedure 32
In Case of Trouble 34
Error Messages 34
Line Fuse 34

5 - FRONT PANEL OPERATION 35
Introduction 35
Front Panel Description 35
System Keys 37
Function Keys 38
Immediate Action Keys 38
Scrolling Keys 38
Metering Keys 39
Output Control Keys 40
Entry Keys 41
Examples of Front Panel Programming 42
1 - Setting the Output Voltage and Current 42
2 - Querying and Clearing Output Protection 43
3 - Making Front Panel Measurements 43
4 - Programming the Digital Output Port 45
5 - Programming the Output Relay (option 760 only) 46
6 - Setting the GPIB Address and RS-232 Parameters 46
7 - Saving and Recalling Operating States 47

A - SPECIFICATIONS 49
Specifications 49
Supplemental Characteristics 50

B - VERIFICATION AND CALIBRATION 53
Introduction 53
Equipment Required 53
Test Setup 53
Performing the Verification Tests 54
Turn-On Checkout 55
Voltage Programming and Measurement Accuracy 55
Current Programming and Measurement Accuracy 55
Performing the Calibration Procedure 59
Front Panel Calibration Menu 59
Front Panel Calibration 60
Calibration Error Messages 62
Changing the Calibration Password 62
Calibration Over the GPIB 63

C - ERROR MESSAGES 65
Error Number List 65

D - LINE VOLTAGE CONVERSION 69
Open the Unit 69
Configure the Power Transformer 69
Install the Correct Line Fuse 70
Close the Unit 70

INDEX 71

Artisan Technology Group - Quality Instrumentation ... Guaranteed | (888) 88-SOURCE | www.artisantg.com

1

Quick Reference

Agilent 66312A Dynamic Measurement DC Source and Agilent 6611C/6612C/6613C/6614C System DC Power Supply

The Agilent 66312A is a 40 Watt, high performance dc power supply that provides dynamic measurement and analysis of voltage and current waveforms. It is designed to simplify the testing of digital cellular and mobile phones. For example, data acquired using its dynamic measurement capability can be used in determining the battery operating time of digital wireless communications products.

The Agilent 6611C, 6612C, 6613C and 6614C are 40 and 50 Watt, high performance dc power supplies with output current measurement capability in the microampere range. They are well suited for testing portable battery-powered products.

Additionally, the combination of bench-top and system features in these dc sources provide versatile solutions for your design and test requirements.

Convenient bench-top features

- Up to 50 Watts output power
- Easy to use knob for voltage and current settings
- Highly visible vacuum-fluorescent front panel display
- Excellent load and line regulation; low ripple and noise
- Measurement capability down to microampere levels
- Current sinking up to 30% of the rated current
- Instrument state storage
- Portable case

Flexible system features

- GPIB (IEEE-488) and RS-232 interfaces are standard
- SCPI (Standard Commands for Programmable Instruments) compatibility
- Triggered acquisition of digitized output current and voltage waveforms (Agilent 66312A only)
- I/O setup easily done from the front panel

Artisan Technology Group - Quality Instrumentation ... Guaranteed | (888) 88-SOURCE | www.artisantg.com

The Front Panel - At a Glance

① 14-character display shows output measurements and programmed values.

② Annunciators indicate operating modes and status conditions.

③ Rotary control sets voltage, current, and menu parameters. Use ← and → to set the resolution; then adjust the value with the knob.

④ Front panel output connectors.

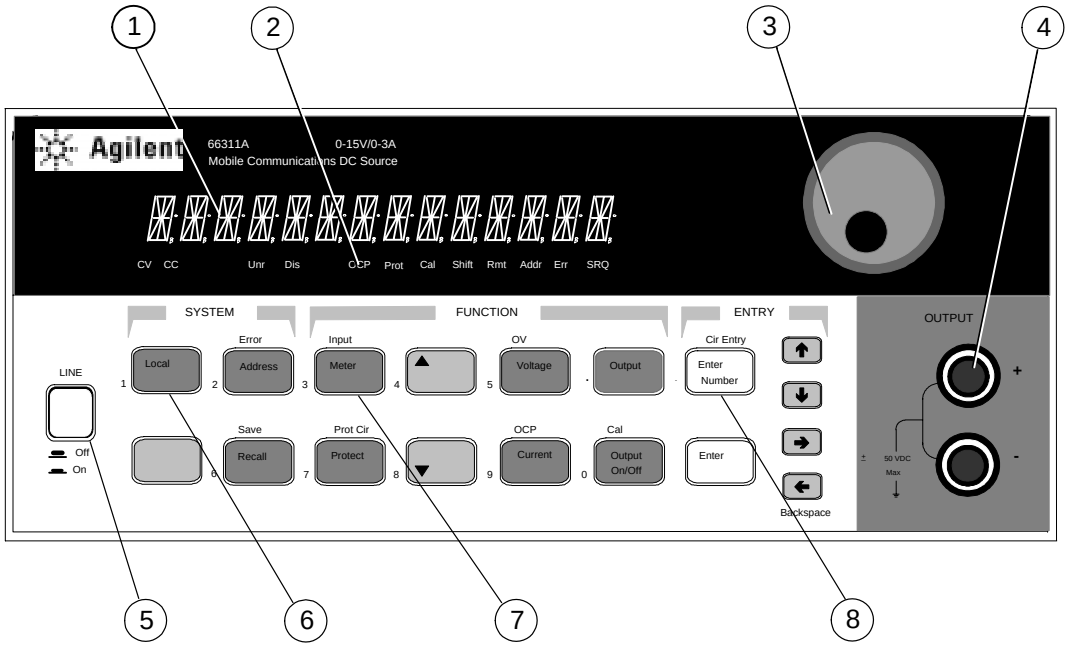

⑤ Turns the dc source on and off.

⑥ System keys:

- return to Local mode
- set the GPIB address
- set the RS-232 interface
- display SCPI error codes
- save and recall instrument states.

⑦ Function keys:

- enable/disable output
- select metering functions
- program voltage and current
- set and clear protection functions
- ▼ and ▲ scroll through the front panel menu commands.

⑧ Entry keys:

- enter values
- increment or decrement values
- ↓ and ↑ select front panel menu parameters.
- ← and → select a digit in the numeric entry field.

Artisan Technology Group - Quality Instrumentation ... Guaranteed | (888) 88-SOURCE | www.artisantg.com

Front Panel Number Entry

Enter numbers from the front panel using one of the following methods:

Use the arrow keys and knob to change voltage or current settings

NOTE The output must be ON to see the displayed values change in Meter mode.

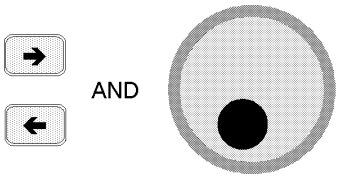

Use the Function keys and knob to change the displayed settings

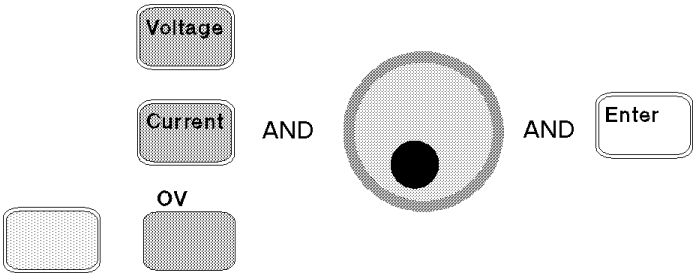

Use the arrow keys to edit individual digits in the displayed setting

↑	Increments the flashing digit
↓	Decrements the flashing digit
→	Moves the flashing digit to the right
←	Moves the flashing digit to the left
Enter	Enters the value when editing is complete

Use the Function keys and Entry keys to enter a new value

NOTE If you make a mistake, use the Backspace key to delete the number, or press the Meter key to return to meter mode.

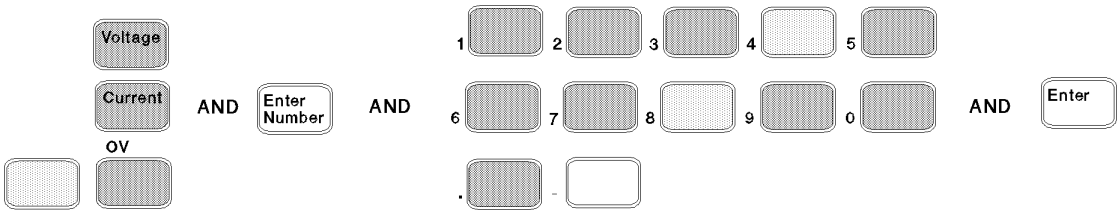

Artisan Technology Group - Quality Instrumentation ... Guaranteed | (888) 88-SOURCE | www.artisantg.com

Front Panel Annunciators

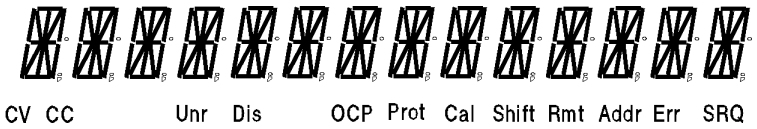

CV	The output is operating in constant voltage mode.
CC	The output is operating in constant current mode.
Unr	The output is unregulated.
Dis	The output is OFF. Press the Output On/Off key to turn the output on.
OCP	The over-current protection state is ON. Press the OCP key to turn over-current protection off.
Prot	Indicates that the output has been disabled by one of the protection features. Press the Prot Clear key to clear the protection condition.
Cal	Calibration mode is ON. Scroll to the Cal Off command and press the Enter key to exit the calibration mode.
Shift	The Shift key has been pressed.
Rmt	The selected Remote programming interface (either GPIB or RS-232) is active. Press the Local key to return the unit to front panel control.
Addr	The interface is addressed to talk or listen.
Err	There is an error in the SCPI error queue. Press the Error key to view the error code.
SRQ	The interface is requesting service.

Immediate Action Keys

Output On/Off	A toggle switch that turns the output of the dc source on or off.
Local	Activates front panel control when the unit is in remote mode (unless a Lockout command is in effect).
Shift Prot Clr	Resets the protection circuit and allows the unit to return to its last programmed state.
Shift OCP	A toggle switch that enables or disables overcurrent protection.

Artisan Technology Group - Quality Instrumentation ... Guaranteed | (888) 88-SOURCE | www.artisantg.com

Front Panel Menus - At a Glance

Address		*ADDRESS 7*	Sets the GPIB Address
	▼	*INTF GPIB*	Selects an interface (GPIB or RS232)
	▼	*BAUDRATE 300*	Selects baud rate (300, 600, 1200, 2400, 4800, 9600)
	▼	*PARITY NONE*	Selects message parity (NONE, EVEN, ODD, MARK, SPACE)
	▼	*FLOW NONE*	Selects flow control (XON-XOFF, RTS-CTS, DTR-DSR, NONE)
	▼	*LANG SCPI*	Selects language (SCPI or COMP)
Recall		**RCL 0*	Recalls instrument state
Shift	Save	**SAV 0*	Saves present instrument state
Shift	Error	*ERROR 0*	Displays errors in SCPI error queue
Meter		*12.000V 0.204A*	Measures output voltage and current
	▼	*12.500V MAX*	Measures peak output voltage[1]
	▼	*1.000V MIN*	Measures minimum output voltage[1]
	▼	*12.330V HIGH*	Measures the high level of a voltage pulse waveform[1]
	▼	*0.080V LOW*	Measures the low level of a voltage pulse waveform[1]
	▼	*12.000V RMS*	Measures rms voltage[1]
	▼	*0.350A MAX*	Measures peak output current[1]
	▼	*0.050A MIN*	Measures minimum output current[1]
	▼	*0.400A HIGH*	Measures the high level of a current pulse waveform[1]
	▼	*0.012A LOW*	Measures the low level of a current pulse waveform[1]
	▼	*0.210A RMS*	Measures rms current[1]
Voltage		*VOLT 20.000*	Sets the output voltage
Current		*CURR 2.000*	Sets the output current
Protect		*OC -- -- -- --*	Protection status (example shows overcurrent tripped)
Output		**RST*	Places the dc source in the factory-default state
	▼	*PON:STATE RST*	Select the power-on state command (RST or RCL0)
	▼	*PROT:DLY 0.08*	Sets the output protection delay in seconds
	▼	*RI LATCHING*	Sets the remote inhibit mode (LATCHING, LIVE, or OFF)
	▼	*DFI OFF*	Sets the discrete fault indicator state (ON or OFF)
	▼	*DFI:SOUR OFF*	Selects the DFI source (QUES, OPER, ESB, RQS, or OFF)
	▼	*PORT RIDFI*	Sets the output port functions (RIDFI or DIGIO)
	▼	*DIGIO 7*	Sets and reads the I/O port value (0 through 7)
	▼	*RELAY ON*	Sets the output relay state (ON or OFF) [2]
	▼	*RELAY NORM*	Sets the output relay polarity (NORM or REV) [2]
Shift	OV	*VOLT:PROT 22*	Sets overvoltage protection level
Shift	Input	*CURR:RANG HIGH*	Sets current range (HIGH, LOW, or AUTO)
	▼	*CURR:DET ACDC*	Sets current measurement detector (ACDC or DC)[1]
Shift	Cal	*CAL ON*	Accesses calibration menu (See User's Guide).

Use ↓ and ↑ to select menu parameters. Use Meter to exit any menu and return to metering mode.

[1]Not available on Agilent 6611C – 6614C or in Compatibility mode. [2]Not available on Agilent 66312A.

Artisan Technology Group - Quality Instrumentation ... Guaranteed | (888) 88-SOURCE | www.artisantg.com

SCPI Programming Commands - At a Glance

NOTE Some [optional] commands have been omitted for clarity. Refer to the Programming Guide for a complete description of all programming commands.

```
ABORt
CALibrate
    :CURRent [:SOURce] [:POSitive]
                :MEASure :LOWRange
                         :AC[1]
    :DATA <n>
    :LEVel  P1 | P2 | P3 | P4
    :PASSword  <n>
    :SAVE
    :STATe  <bool> [, <n>]
    :VOLTage  [:DC]
              :PROTection
DISPlay
    [:STATe] <bool>
    :MODE  NORMal | TEXT
    :TEXT <display_string>
INITiate
    [:IMMediate] :SEQuence[1|2[1]]
                 :NAME TRANsient | ACQuire[1]
    :CONTinuous :SEQuence[1], <bool>
                :NAME  TRANsient, <bool>
MEASure | FETCh[2]
    :ARRay :CURRent?[1]
           :VOLTage?[1]
    [:SCALar]:CURRent[:DC]?
                     :ACDC?[1]
                     :HIGH?[1]
                     :LOW?[1]
                     :MAX?[1]
                     :MIN?[1]
             :VOLTage [:DC]?
                     :ACDC?[1]
                     :HIGH?[1]
                     :LOW?[1]
                     :MAX?[1]
                     :MIN?[1]
OUTPut
    [:STATe] <bool> [,NORelay]
    :DFI [:STATe] <bool>
         :SOURce  QUES | OPER | ESB | RQS | OFF
    :PON :STATe  RST | RCL0
    :PROTection :CLEar
                :DELay <n>
    :RELay [:STATe] <bool>[3]
           :POLarity  NORM | REV[3]
    :RI :MODE  LATCHing | LIVE | OFF
```

[1]Not available on Agilent 6611C – 6614C
[2] Fetch commands not available on Agilent 6611C – 6614C
[3] Not available on Agilent 66312A

```
SENSe
    :CURRent :RANGe <n>
             :DETector ACDC |  DC[1]
    :FUNCtion  "VOLT" | "CURR"[1]
    :SWEep   :OFFSet  :POINts <n>[1]
             :POINts <n>
             :TINTerval <n>
    :WINDow  HANN | RECT
[SOURce:]
    CURRent [:LEVel] [:IMMediate]  <n>
                     :TRIGgered <n>
            :PROTection :STATe <bool>
    DIGital :DATA <n>
          :FUNCtion  RIDF | DIG
    VOLTage [:LEVel] [:IMMediate]  <n>
                     :TRIGgered <n>
            :PROTection <n>
STATus
    :PRESet
    :OPERation [:EVENt]?
               :CONDition?
               :ENABle <n>
               :NTRansition <n>
               :PTRansition <n>
    :QUEStionable [:EVENt]?
               :CONDition?
               :ENABle <n>
               :NTRansition <n>
               :PTRansition <n>
SYSTem
    :ERRor?
    :LANGuage  SCPI | COMPatibility
    :VERSion?
    :LOCal
    :REMote
    :RWLock
TRIGger
    :SEQuence2 | :ACQuire [:IMMediate][1]
                          :COUN t :CURRent <n>[1]
                                  :VOLTage <n>[1]
                          :HYSTeresis:CURRent <n>[1]
                                     :VOLTage <n>[1]
                          :LEVel :CURRent <n>[1]
                                 :VOLTage <n>[1]
                          :SLOPe :CURRent  POS | NEG | EITH[1]
                                 :VOLTage  POS | NEG | EITH[1]
                          :SOURce  BUS | INTernal[1]
    [:SEQuence1 | :TRANsient] [:IMMediate]
                              :SOURce  BUS
    :SEQuence1 :DEFine  TRANsient
    :SEQuence2 :DEFine  ACQuire[1]
```


Artisan Technology Group - Quality Instrumentation ... Guaranteed | (888) 88-SOURCE | www.artisantg.com

The Rear Panel - At a Glance

① GPIB (IEEE-488) interface connector

② RS-232 interface connector

③ INH/FLT (remote INHibit / internal FauLT) connector. Connector plug is removable.

④ Output and Remote sense connector. Connector plug is removable.

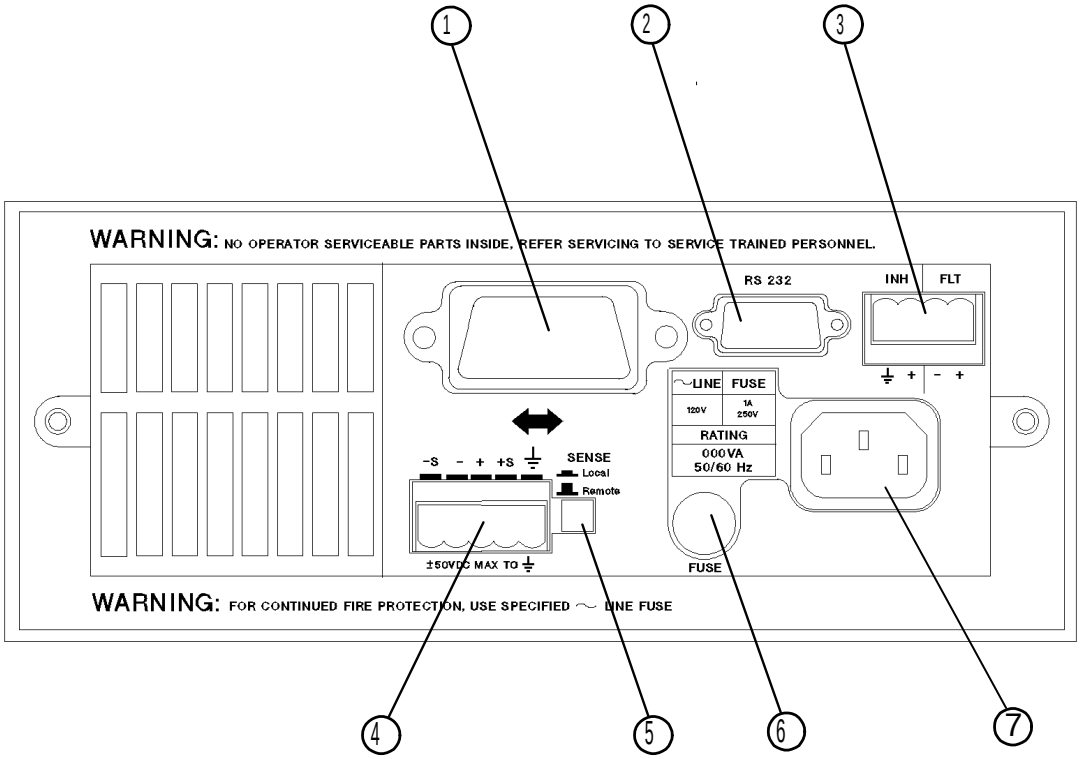

⑤ Remote or Local sense switch

⑥ Fuse holder

⑦ Power cord connector (IEC 320)

Use the front panel Address menu to

- Select the GPIB or RS-232 interface (see chapter 4 in User's Guide)
- Select the GPIB bus address (see chapter 4 in User's Guide)
- Configure the RS-232 interface (see chapter 4 in User's Guide)

Artisan Technology Group - Quality Instrumentation ... Guaranteed | (888) 88-SOURCE | www.artisantg.com

Artisan Technology Group - Quality Instrumentation ... Guaranteed | (888) 88-SOURCE | www.artisantg.com

2

General Information

Document Orientation

This manual describes the operation of the Agilent Model 66312A Dynamic Measurement DC Source and the Agilent Model 6611C, 6612C 6613C and 6614C System DC Power Supplies. Unless otherwise noted, all units will be referred to by the description "dc source" throughout this manual. The following documents and software are shipped with your dc source:

- a User's Guide (this document), contains installation, checkout, and front panel information
- a Programming Guide, contains detailed GPIB programming information

The following Getting Started Map will help you find the information you need to complete the specific task that you want to accomplish. Refer to the table of contents or index of each guide for a complete list of the information contained within.

Getting Started Map

Task	Where to find information
Installing the unit Line voltage connections Computer connections Load connections	User's Guide
Checking out the unit Verifying proper operation Using the front panel Calibrating the unit	User's Guide
Using the front panel Front panel keys Front panel examples	User's Guide
Using the programming interface GPIB interface RS-232 interface	User's Guide Programming Guide
Programming the unit using SCPI (and Compatibility) commands SCPI commands SCPI programming examples Compatibility language	Programming Guide
Installing the VXI*plug&play* instrument driver **NOTE:** The driver must be installed on your pc to access the on-line information. Drivers are available on the web at www.agilent.com/find/drivers.	Programming Guide

Artisan Technology Group - Quality Instrumentation ... Guaranteed | (888) 88-SOURCE | www.artisantg.com

Safety Considerations

This dc source is a Safety Class 1 instrument, which means it has a protective earth terminal. That terminal must be connected to earth ground through a power source equipped with a ground receptacle. Refer to the Safety Summary page at the beginning of this guide for general safety information. Before installation or operation, check the dc source and review this guide for safety warnings and instructions. Safety warnings for specific procedures are located at appropriate places in the guide.

Options and Accessories

Table 2-1. Options

Option	Description
100	100 Vac nominal, 50/60 Hz
120	120 Vac nominal, 50/60 Hz
220	220 Vac nominal, 50/60 Hz
230	230 Vac nominal, 50/60 Hz
760	Isolation and polarity reversal relays (not available on Agilent 66312A)
1CM[1]	Rack mount kit for one unit (p/n 5062-3972)
AXS[1]	Rack mount kit for 2 side-by-side units. Consists of: Lock-link kit (p/n 5061-9694) and Flange kit (p/n 5062-3974)
AXU	Rack mount and slide kit for 2 side-by-side units of different depth. Consists of: Support shelf (p/n 5062-3996) and Slide kit (p/n 1494-0015)
AXV	Rack mount, slide kit, and support shelf for mounting one unit. Consists of: Fill panel (p/n 5062-4022), Support shelf (p/n 5062-3996), and Slide kit (p/n 1494-0015)
0BN	Service manual with extra operating manuals

[1]Support rails are required when rack mounting units. Use E3663A support rails for Agilent rack cabinets, and E3664A for non-Agilent rack cabinets.

Table 2-2. Accessories

Item	Part Number
GPIB cables	
1.0 meter (3.3 ft)	10833A
2.0 meters (6.6 ft)	10833B
4.0 meters (13.2 ft)	10833C
0.5 meters (1.6 ft)	10833D
RS-232 cable	34398A
(9-pin F to 9-pin F, 2.5 meter, null modem/printer cable with one 9-pin M to 25-pin F adapter	
RS-232 adapter kit (contains 4 adapters)	34399A
9-pin M to 25-pin M for pc or printer	
9-pin M to 25-pin M for pc or printer	
9-pin M to 25-pin M for modem	
9-pin M to 9-pin M for modem	

Artisan Technology Group - Quality Instrumentation ... Guaranteed | (888) 88-SOURCE | www.artisantg.com

Description

Both the Agilent 66312A Dynamic Measurement DC Source and the Agilent 6611C, 6612C, 6613C and 6614C System DC Power Supplies combine two instruments in one unit. They include a dc source, which produces dc output with programmable voltage and current amplitude, and a highly accurate voltage and current meter, with the capability to measure very low-level currents. Additionally, the Agilent 66312A Dynamic Measurement DC Source has the ability to measure and characterize output voltage and current of pulse or ac waveforms.

Capabilities

- Output Voltage and Current control with 12-bit programming resolution
- Extensive measurement capability:
  - dc voltage and current.
  - rms and peak voltage and current (Agilent 66312A only).
  - 16-bit measurement resolution (low range accurate down to 2 microamperes).
  - Triggered acquisition of digitized current and voltage waveforms (Agilent 66312A only).
- Front panel control with 14-character vacuum fluorescent display, keypad, and rotary control for voltage and current settings.
- Built-in GPIB and RS-232 interface programming with SCPI command language.
- Non-volatile state storage and recall with SCPI command language.
- Over-voltage, over-current, over-temperature, and RI/DFI protection features.
- Extensive selftest, status reporting, and software calibration.

Front Panel Controls

The front panel has both rotary (RPG) and keypad controls for setting the output voltage and current. The panel display provides digital readouts of a number of output measurements. Annunciators display the operating status of the dc source. System keys let you perform system functions such as setting the GPIB address and recalling operating states. Front panel Function keys access the dc source function menus. Front panel Entry keys let you select and enter parameter values. Refer to chapter 5 for a complete description of the front panel controls.

Remote Programming

NOTE: When shipped, all units are set to the SCPI programming language. The language setting is saved in non-volatile memory.
To change the programming language from SCPI to Compatibility language, press the front panel **Address** key, use ▼ to scroll to the LANG command, press 🡻 to select SCPI, then press **Enter**. Refer to the Programming Guide supplied with your dc source for further information about remote programming.

The dc source may be remotely programmed via the GPIB bus and/or from an RS-232 serial port. GPIB programming is with SCPI commands (Standard Commands for Programmable Instruments), which make the dc source programs compatible with those of other GPIB instruments. Compatibility commands are also included to make the dc source compatible with the Agilent 6632A, 6633A, and 6634A Series dc power supplies (refer to appendix D in the the Programming Guide). Dc source status registers allow remote monitoring of a wide variety of dc source operating conditions.

Artisan Technology Group - Quality Instrumentation ... Guaranteed | (888) 88-SOURCE | www.artisantg.com

Output Characteristic

The dc source's output characteristic is shown in the following figure. The output of the dc source may be adjusted to any value within the boundaries shown.

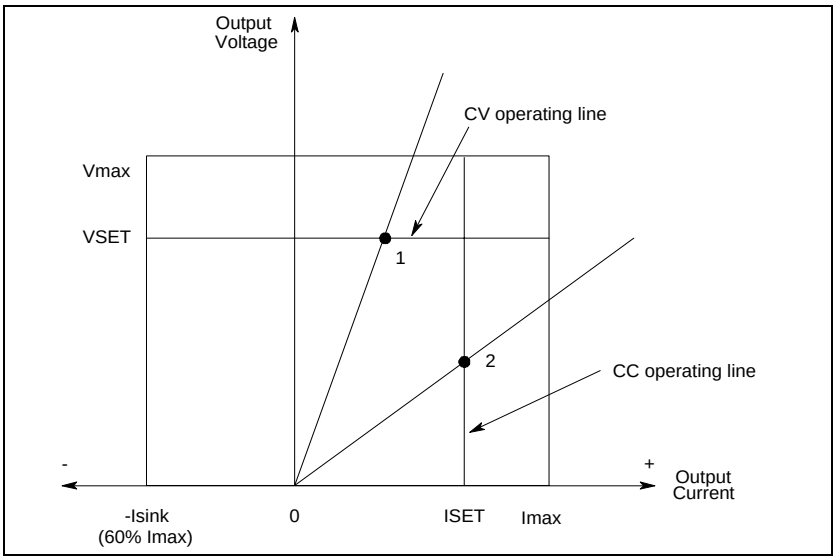

Figure 2-1. Dc Source Output Characteristic

The dc source can operate in either constant voltage (CV) or constant current (CC) over the rated output voltage and current. Although the dc source can operate in either mode, it is designed as a *constant voltage* source. This means that the unit turns on in constant voltage mode with the output voltage rising to its Vset value. There is no command for constant current operation. The only way to turn the unit on in constant current mode is by placing a short across the output and then enabling or turning the output on.

Note that the dc source cannot be programmed to operate in a specific mode. After initial turn-on, the operating mode of the unit will be determined by the voltage setting, the current setting, *and* the load resistance. In figure 2-1, operating point 1 is defined by the load line traversing the positive operating quadrant in the constant voltage region. Operating point 2 is defined by the load line traversing the positive operating quadrant in the constant current region.

Figure 2-1 also shows a single range – two quadrant capability. This means that the dc source is capable of sourcing as well as sinking current over the output voltage range from zero volts to the rated maximum. The negative current sinking capability of the dc source is not programmable, and is fixed at a maximum of approximately 60% of Imax.

NOTE: If you attempt to operate the dc source beyond its output ratings, the output of the unit will become unregulated. This is indicated by the UNR annunciator on the front panel. The output may also become unregulated if the ac input voltage drops below the minimum rating specified in Appendix A.

Appendix A documents the dc source's specifications and supplemental characteristics.

Artisan Technology Group - Quality Instrumentation ... Guaranteed | (888) 88-SOURCE | www.artisantg.com

3

Installation

Inspection

Damage

When you receive your dc source, inspect it for any obvious damage that may have occurred during shipment. If there is damage, notify the shipping carrier and the nearest Agilent Sales and Support Office immediately. The list of Agilent Sales and Support Offices is at the back of this guide. Warranty information is printed in the front of this guide.

Packaging Material

Until you have checked out the dc source, save the shipping carton and packing materials in case the unit has to be returned. If you return the dc source for service, attach a tag identifying the model number and the owner. Also include a brief description of the problem.

Items Supplied

The following user-replaceable items are included with your dc source. Some of these items are installed in the unit.

Table 3-1. Items Supplied

Item	Part Number	Description
Power Cord	contact nearest Agilent Sales and Support Office	A power cord appropriate for your location.
Digital connector	1252-1488	A 4-terminal digital plug that connects to the back of the unit.
Output connector	0360-2604	A 5-terminal plug that connects to the back of the unit.
Line Fuse	2110-0633 2110-0788	T2.5A 250V (time delay) for 100/120 Vac operation T1.25A 250V (time delay) for 220/230 Vac operation
Feet	5041-8801	feet for bench mounting
User's Guide	5962-8194	Contains installation, checkout, and front panel information.
Programming Guide	5962-8198	Contains detailed GPIB programming information.

Cleaning

Use a dry cloth or one slightly dampened with water to clean the external case parts. Do not attempt to clean internally.

WARNING: To prevent electric shock, unplug the unit before cleaning.

Artisan Technology Group - Quality Instrumentation ... Guaranteed | (888) 88-SOURCE | www.artisantg.com

Location

Figure 3-1 gives the dimensions of your dc source. The dc source must be installed in a location that allows sufficient space at the sides and back for adequate air circulation (see Bench Operation).

NOTE: This dc source generates magnetic fields that may affect the operation of other instruments. If your instrument is susceptible to operating magnetic fields, do not locate it in the immediate vicinity of the dc source. Typically, at three inches from the dc source, the electromagnetic field is less than 5 gauss. Many CRT's, such as those used in computer displays, are susceptible to magnetic fields much lower than 5 gauss. Check susceptibility before mounting any display near the dc source.

Bench Operation

A fan cools the dc source by drawing air in through the sides and exhausting it out the back. Minimum clearances for bench operation are 1 inch (25 mm) along the sides.
Do not block the fan exhaust at the rear of the unit.

Rack Mounting

The dc source can be mounted in a standard 19-inch rack panel or cabinet. Table 2-1 documents the Agilent part numbers for the various rack mounting options that are available for the dc source. Installation instructions are included with each rack mount option.

NOTE: Support rails or an instrument shelf is required when rack mounting units.

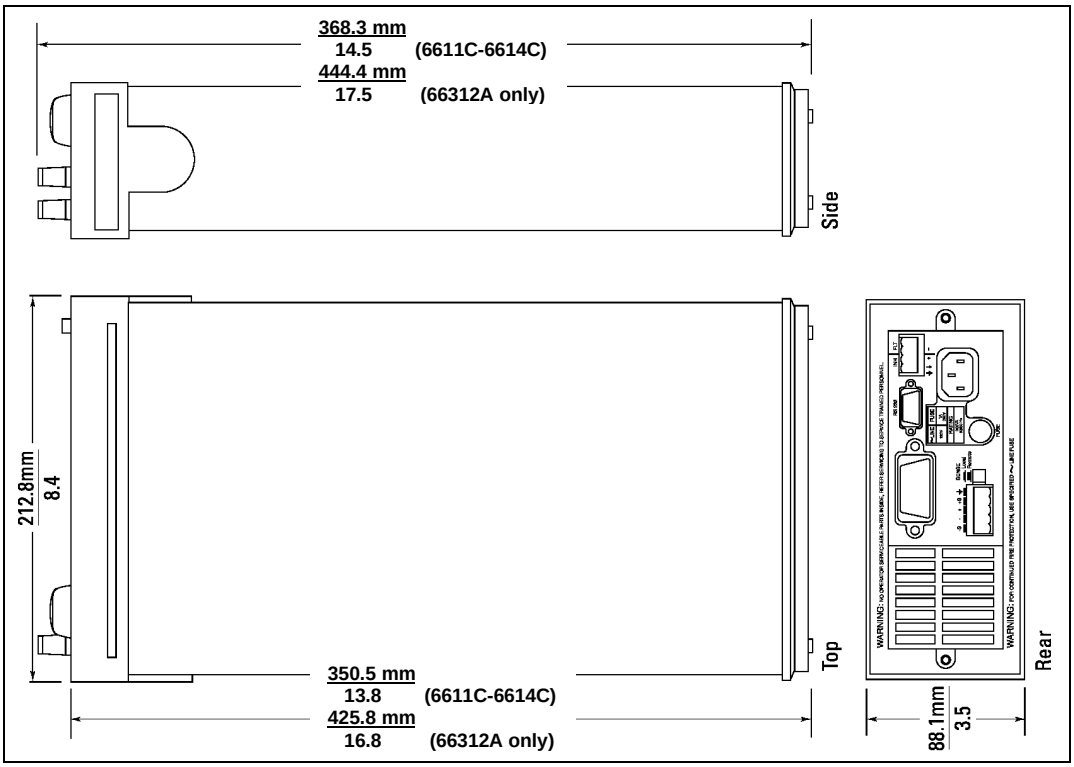

Figure 3-1. Outline Diagram

Artisan Technology Group - Quality Instrumentation ... Guaranteed | (888) 88-SOURCE | www.artisantg.com

Input Connections

Connect the Power Cord

1. Unscrew the line fuse cap from the rear panel and verify that the fuse rating matches what is specified on the FUSES label on the rear panel. Reinstall the fuse. (See table 3-1 for part numbers.)
2. Connect the power cord to the IEC 320 connector on the rear of the unit. If the wrong power cord was shipped with your unit, contact your nearest Agilent Sales and Support Office (refer to the list at the back of this guide) to obtain the correct cord.

NOTE: The detachable power cord may be used as an emergency disconnecting device. Removing the power cord from the ac input connector will disconnect ac input power to the unit.

Output Connections

The output connector has a termination for the + and – output, the + and – sense terminals, and an earth ground terminal. The 5-pin connector is removable and accepts wires sizes from AWG 22 to AWG 12. Disconnect the mating plug from the unit by pulling it straight back.

Front panel binding posts are available to connect load wires for bench operation. The front panel binding posts are paralleled with the rear panel + and – connections. *Before using the front panel binding posts, make sure that the sense switch on the back of the unit is set to* ***Local****.*

NOTE: Front panel binding posts are provided for convenience. Only the rear panel terminals are optimized for noise, regulation, and transient response as documented in Appendix A.

Wire Considerations

To minimize the possibility of instability on the output,

- keep load leads as short as possible
- bundle or twist the leads tightly together to minimize inductance

Current Ratings

Fire Hazard To satisfy safety requirements, load wires must be large enough not to overheat when carrying the maximum short-circuit current of the dc source. If there is more than one load, then any pair of load wires must be capable of safely carrying the full-rated current of the dc source.

The following table lists the characteristics of AWG (American Wire Gage) copper wire.

Table 3-2. Ampacity and Resistance of Stranded Copper Conductors

AWG No.	Ampacity (in free air)	Resistance (at 20 deg. C)	
		Ω/m	Ω/ft
20	8.33	0.0345	0.01054
18	15.4	0.0217	0.00663
16	19.4	0.0137	0.00417
14	31.2	0.0086	0.00262
12	40	0.0054	0.00165

Artisan Technology Group - Quality Instrumentation ... Guaranteed | (888) 88-SOURCE | www.artisantg.com

Voltage Drops

The load wires must also be large enough to avoid excessive voltage drops due to the impedance of the wires. In general, if the wires are heavy enough to carry the maximum short circuit current without overheating, excessive voltage drops will not be a problem. The voltage drops across the load wires should be limited to less than two volts. Refer to Table 3-2 to calculate the voltage drop for some commonly used AWG copper wire.

Multiple Load Connections

When the unit is in local sensing mode and you are connecting multiple loads to the output, connect each load to the output terminals using separate load leads. This minimizes mutual coupling effects and takes full advantage of the dc source's low output impedance. Each pair of wires should be as short as possible and twisted or bundled to reduce lead inductance and noise pickup.

If cabling considerations require the use of distribution terminals that are located remotely from the dc source, connect the dc source's output terminals to the remote distribution terminals by a pair of twisted or bundled wires. Connect each load to the distribution terminals separately. Remote voltage sensing is recommended under these circumstances. Sense either at the remote distribution terminals, or if one load is more sensitive than the others, sense directly at the critical load.

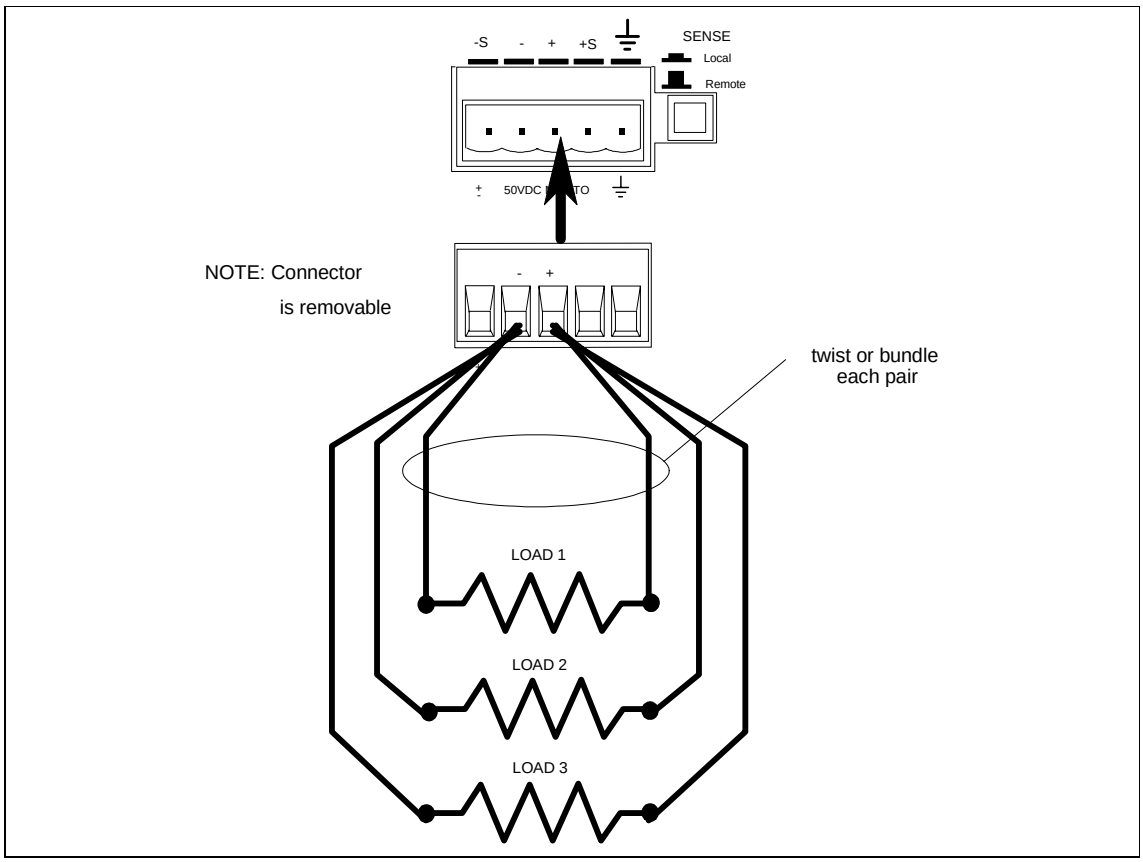

Figure 3-2. Multiple Load Connections

Artisan Technology Group - Quality Instrumentation ... Guaranteed | (888) 88-SOURCE | www.artisantg.com

Remote Sense Connections

Under normal operation, the dc source senses the output voltage at the output terminals on the back of the unit. External sense terminals are available on the **back** of the unit that allow the output voltages to be sensed at the load, compensating for impedance losses in the load wiring. *You cannot remote sense at the front panel binding posts.*

The output connector accepts wires sizes from AWG 22 to AWG 12. Disconnect the mating plug to make your wiring connections. When the sense wire connections are complete, set the Remote/Local switch on the back of the unit to Remote (switch is out).

Sense Leads

The sense leads are part of the dc source's feedback path and must be kept at a low resistance (less than several ohms) to maintain optimal performance. Connect the sense leads carefully so that they do not become open-circuited. If the sense leads are left unconnected or become open during operation, the dc source will regulate at the output terminals, resulting in a 3% to 5% increase in output over the programmed value. Shorting the sense leads trips the OVP circuit.

NOTE: It is good engineering practice to twist and shield all signal wires to and from the sense connectors. Connect the shield at the dc source end only. Do not use the shield as one of the sensing conductors.

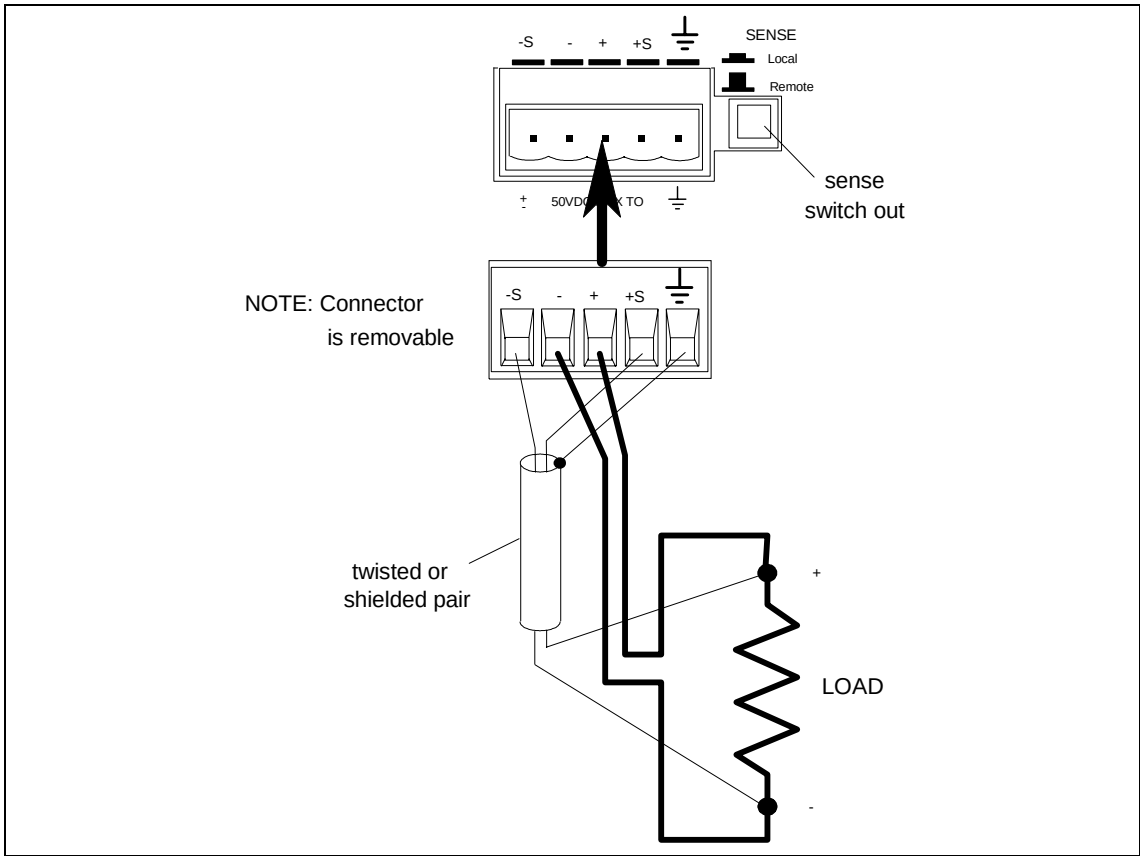

Figure 3-3. Remote Sense Connections

Artisan Technology Group - Quality Instrumentation ... Guaranteed | (888) 88-SOURCE | www.artisantg.com

The overvoltage protection circuit senses voltage near the output terminals, not at the load. Therefore the signal sensed by the OVP circuit can be significantly higher than the actual voltage at the load. When using remote sensing, you must program the OVP trip voltage high enough to compensate for the voltage drop between the output terminals and the load. Also, if the sum of the programmed voltage and the load-lead drop exceeds the dc source's maximum voltage rating, this may also trip the OV protection circuit.

Stability

When the unit is configured for remote sensing, it is possible for the impedance of the load wires and the capacitance of the load to form a filter, which becomes part of the unit's feedback loop. This can degrade the unit's stability and result in poor transient response performance. In extreme cases it may also cause oscillations. The wiring guidelines previously discussed under "Wire Considerations" will eliminate most stability problems associated with load lead inductance. If additional measures are required:

- keep the load capacitance as small as possible
- use larger diameter load wires to reduce resistance

OVP Considerations

The dc source's OVP circuit contains a crowbar SCR, which effectively shorts the output of the dc source whenever the OVP trips. If an external voltage source such as a battery is connected across the output and the OVP is inadvertently triggered, the SCR will continuously sink a large current from the battery, possibly damaging the dc source.

To avoid this, program the OVP setting to its maximum value to prevent it from inadvertently tripping. Additionally, an internal fuse is connected in series with the SCR. This fuse will open to prevent large currents from damaging the SCR. If this internal fuse has opened, The FS status annunciator will be set. Refer to the Service Manual for instructions about replacing this fuse.

In addition, the OVP circuit's SCR crowbar has been designed to discharge capacitances up to a specific limit. This limit is:

Agilent 6611C	127,000 μF.	Agilent 6613C	20,000 μF.
Agilent 6612C and 66312A	50,000 μF.	Agilent 6614C	10,000 μF.

If your load capacitance approaches this limit, it is recommended that you do not intentionally trip the OVP and discharge the capacitance through the SCR as part of your normal testing procedure, as this may lead to long-term failure of some components.

INH/FLT Connections

This rear panel connector, has a fault output port and an inhibit input port. The fault (FLT) output, also referred to as the DFI (discrete fault indicator) signal in the front panel and SCPI commands, is an open collector circuit that pulls the positive output low with respect to the negative (chassis-referenced) common. The high impedance inhibit (INH) input, also referred to as the RI (remote inhibit) signal in the front panel and SCPI commands, is used to shut down the power supply output whenever the INH + is pulled low with respect to the INH (chassis-referenced) common.

The connector accepts wires sizes from AWG 22 to AWG 12. Disconnect the mating plug to make your wire connections.

Artisan Technology Group - Quality Instrumentation ... Guaranteed | (888) 88-SOURCE | www.artisantg.com

NOTE: It is good engineering practice to twist and shield all signal wires to and from the digital connectors. If shielded wire is used, connect only one end of the shield to chassis ground to prevent ground loops.

Figure 3-4 shows how you can connect the FLT/INH circuits of the dc source.

In example A, the INH input connects to a switch that shorts the Inhibit pin (+) to common whenever it is necessary to disable output of the unit. This activates the remote inhibit (RI) circuit, which turns off the dc output. The front panel Prot annunciator comes on and the RI bit is set in the Questionable Status Event register. To re-enable the unit, first open the connection between pins INH + and common and then clear the protection circuit. This can be done either from the front panel or over the GPIB/RS-232.

In example B, the FLT output of one unit is connected to the INH input of another unit. A fault condition in one of the units will disable all of them without intervention either by the controller or external circuitry. The controller can be made aware of the fault via a service request (SRQ) generated by the Questionable Status summary bit. Note that the FLT output can also be used to drive an external relay circuit or signal other devices whenever a user-definable fault occurs.

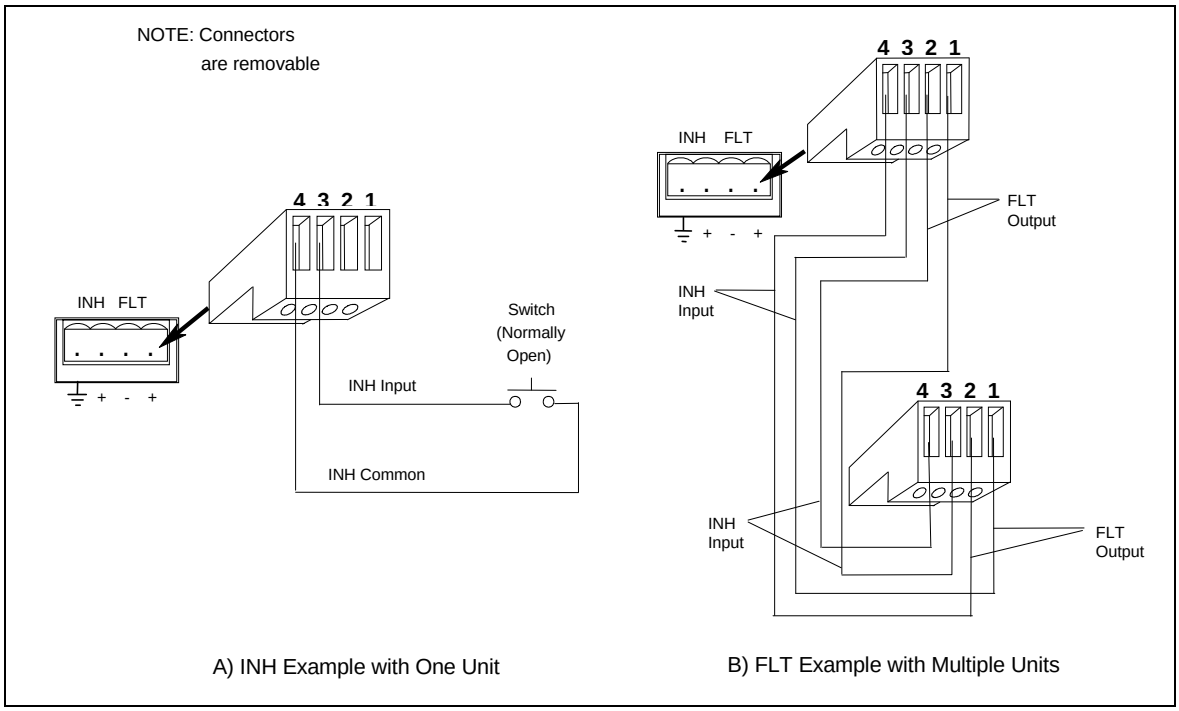

Figure 3-4. FLT/INH Examples

Artisan Technology Group - Quality Instrumentation ... Guaranteed | (888) 88-SOURCE | www.artisantg.com

Digital I/O Connections

As shown in Table 3-3 and Figure 3-5, the FLT/INH connector can also be configured as a digital I/O port. Information on programming the digital I/O port is found in chapter 5 and under [SOURce:]DIGital:DATA and [SOURce:]DIGital: FUNCtion commands in the Programming Guide. The electrical characteristics of the digital connector are described in appendix A.

Table 3-3. FLT/INH DIGital I/O Connector

PIN	FAULT/INHIBIT	DIGITAL I/O
1	FLT Output	Output 0
2	FLT Common	Output 1
3	INH Input	Input/Output 2
4	INH Common	Common

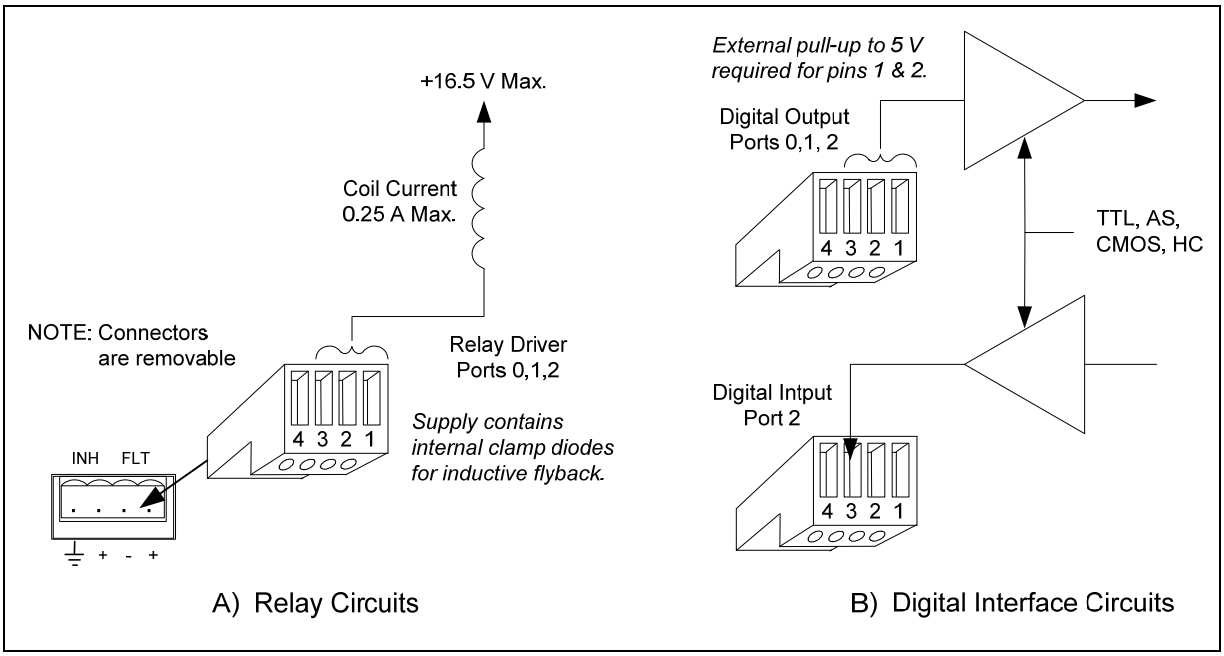

Figure 3-5. Digital I/O Examples

Controller Connections

The dc source connects to a controller either through an GPIB or an RS-232 connector.

GPIB Interface

Each dc source has its own GPIB bus address, which can be set using the front panel **Address** key as described in chapter 5. GPIB address data is stored in non-volatile memory. The dc source is shipped with its GPIB address set to 5.

Dc sources may be connected to the GPIB interface in series configuration, star configuration, or a combination of the two, provided the following rules are observed:

Artisan Technology Group - Quality Instrumentation ... Guaranteed | (888) 88-SOURCE | www.artisantg.com

- The total number of devices including the controller is no more than 15.
- The total length of all cables used is no more than 2 meters times the number of devices connected together, up to a maximum of 20 meters. (Refer to table 2-2 for a list of GPIB cables available from Agilent Technologies.)
- Do not stack more than three connector blocks together on any GPIB connector.
- Make sure all connectors are fully seated and the lock screws are firmly finger-tightened.

RS-232 Interface

The dc source has an RS-232 programming interface, which is activated by commands located in the front panel **Address** menu. All SCPI and COMPatibility commands are available through RS-232 programming. When the RS-232 interface is selected, the GPIB interface is disabled.

The RS-232 connector is a DB-9, male connector. Adapters are available to connect the dc source to any computer or terminal with a properly configured DB-25 connector (see Table 2-2).

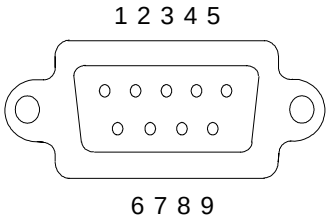

Figure 3-6. RS-232 Connector

Pin	Input/Output	Description
1	-	no connection
2	Input	Receive Data (RxD)
3	Output	Transmit Data (TxD)
4	Output	Data Terminal Ready (DTR)
5	Common	Signal ground
6	Input	Data Set Ready (DSR)
7	Output	Request to Send (RQS)
8	Input	Clear to Send (CTS)
9	-	no connection

Artisan Technology Group - Quality Instrumentation ... Guaranteed | (888) 88-SOURCE | www.artisantg.com

Artisan Technology Group - Quality Instrumentation ... Guaranteed | (888) 88-SOURCE | www.artisantg.com

4

Turn-On Checkout

Introduction

Successful tests in this chapter provide a high degree of confidence that the dc source is operating properly. For verification tests, see appendix B. Complete performance tests are given in the Service Guide.

NOTE: This chapter provides a preliminary introduction to the dc source front panel. See chapter 5 for more details.

Using the Keypad

[ ] (shift)	Some of the front panel keys perform two functions, one labeled in black and the other in blue. You access the blue function by first pressing the blue [ ] shift key. Release the key after you press it. The **Shift** annunciator will be on, indicating that you have access to any key's shifted function.
Enter Number	Used to access a third level key function, the numeric entry keys. These third level function keys are labeled in green.
▲ and ▼	These keys let you scroll up and down through the choices in the presently selected function menu. All menu lists are circular; you can return to the starting position by continuously pressing either key.
↑ and ↓	These keys let you select the previous or the next parameter for a specific command. If the command has a numeric range, these keys increment or decrement the existing value. In meter mode, these keys can be used to adjust the magnitude of the output voltage or current. Only the flashing digit is changed by these keys. Use the ← and → keys to move the flashing digit.
← and →	These **Entry** keys move the flashing digit in a numeric entry field to the right or left. This lets you increment or decrement a specific digit in the entry field using the ↑ and ↓ keys or the rotary control knob.
Back space	The backspace key is an erase key. If you make a mistake entering a digit and have not yet pressed **Enter**, you can delete the digit by pressing **Backspace**. Delete more digits by repeatedly pressing this key.
Enter	Executes the entered value or parameter of the presently accessed command. Until you press this key, the parameters you enter with the other keys are displayed but not entered into the dc source. After pressing **Enter**, the dc source returns to Meter mode.

Artisan Technology Group - Quality Instrumentation ... Guaranteed | (888) 88-SOURCE | www.artisantg.com

Checkout Procedure

The tests in this section checks for output voltage and current on the dc source.

NOTE: To perform the checkout procedure, you will need a wire for shorting the output terminals together.

The following procedure assumes that the unit turns on in the factory-default state. If you need more information about the factory default state, refer to the *RST command in chapter 4 of the Programming Guide. Note that the values shown in the Display column may not exactly match the values that appear on the front panel of your unit.

If you have not already done so, connect the power cord to the unit and plug it in.

Table 4-1. Checkout Programming Values

Model	Voltage	OV Prot	Current	Note:
6611C	8	12	5	The checkout procedure is written for models
6612C/66312A	20	22	2	6612C and 66312A. If you have another
6613C	50	55	1	model, enter the correct values from the table
6614C	100	110	0.5	where the procedure calls for an <input>.

	Procedure	Display	Explanation
1.	Turn the unit on. The dc source undergoes a self-test when you first turn it on.	********** ADDRESS 5	During selftest, all display segments are briefly lit, followed by the GPIB Address.
		0.002V .0006A	The display then goes into meter mode with the Dis annunciator on, and all others off. In Meter mode the *******V** digits indicate the output voltage and the *******A** digits indicate the output current. The flashing digit on the display indicates the digit that will be affected if changes are made to the displayed values using the rotary control or the ↑ and ↓ keys. You will only see the changes if the output is ON.

NOTE: Press the Meter key to exit a menu at any time and return to meter mode. If the Err annunciator on the display is on, press the **Shift** key followed by the **Error** key to see the error number. See table 4-2 at the end of this chapter.

2.	Check that the dc source fan is on		You should be able to hear the fan and feel the air coming from the back of the unit.
3.	Press **Voltage, Enter Number, <2, 0>, Enter**	VOLT 0.000 VOLT <20>	Programs the output to 20 volts. After the value is entered, the display returns to Meter mode. Because the output has not been enabled, the meter still indicates approximately 0 volts.
4.	Press **Output On/Off**	<20.003>V 0.0006A	Turns the output on. The **Dis** annunciator should be off and **CV** should be on.
5.	Press **Shift, OV**	VOLT:PROT <22.00>	Display shows the overvoltage protection trip voltage for your unit.

Artisan Technology Group - Quality Instrumentation ... Guaranteed | (888) 88-SOURCE | www.artisantg.com

	Procedure	Display	Explanation
6.	Press **Enter Number, 8, Enter**	VOLT:PROT 8	Programs the OVP to 8 volts, which is less than the previously set output voltage.
		0.449V 0.145A	Because the OVP voltage entered was less than the output voltage, the OVP circuit tripped. The output dropped to zero, **CV** turned off, and **Prot** turned on.
7.	Press **Shift, OV, Enter Number, <2, 2>, Enter**	VOLT:PROT <22>	Programs the OVP to a value greater than the output voltage setting of the unit. This prevents the OV circuit from tripping again when the protection condition is cleared.
8.	Press **Shift, Prot Clear**	<20.003>V 0.0034A	Clears the protection condition, thus restoring the output of the unit. **Prot** turns off and **CV** turns on.
9.	Press **Output on/off**		Turn the output off.
10.	Connect a jumper wire across the + and - output terminals.		Shorts the output of the unit.
11.	Press **Output on/off**.	0.0005V <0.2005>A	The **CC** annunciator is on, indicating that the unit is in constant current mode. The unit is sourcing output current at 10% of the maximum rating (the default output current limit setting).
12.	Press **Current, Enter Number, <2>, Enter**.	0.0452V <1.998>A	Programs the output current to <2> ampere.
13.	Press **Shift, OCP**	0.0005V 0.0003A	You enabled the overcurrent protection circuit. The circuit then tripped because the unit was operating in constant current mode. The **CC** annunciator turns off and the **OCP** and **Prot** annunciators come on.
14.	Press **Shift, OCP**	0.0005V 0.0003A	You have disabled the overcurrent protection circuit. The **OCP** annunciator turns off.
15.	Press **Shift, Prot Clear**	0.0452V <1.998>A	Restores the output. The **Prot** annunciator turns off. **CC** is on.
16.	Turn the unit off and remove the shorting wire from the output terminals.		The next time the unit turns on it will be restored to the *RST or factory default state.

Artisan Technology Group - Quality Instrumentation ... Guaranteed | (888) 88-SOURCE | www.artisantg.com

In Case of Trouble

Error Messages

Dc source failure may occur during power-on selftest or during operation. In either case, the display may show an error message that indicates the reason for the failure.

Selftest Errors

Pressing the **Shift, Error** keys will show the error number. Selftest error messages appear as: ERROR <n> where "n" is a number listed in the following table. If this occurs, turn the power off and then back on to see if the error persists. If the error message persists, the dc source requires service.

Table 4-2. Power-On Selftest Errors

Error No.	Failed Test
Error 0	No error
Error 1	Non-volatile RAM RD0 section checksum failed
Error 2	Non-volatile RAM CONFIG section checksum failed
Error 3	Non-volatile RAM CAL section checksum failed
Error 4	Non-volatile RAM STATE section checksum failed
Error 5	Non-volatile RST section checksum failed
Error 10	RAM selftest
Error 11 to 14	VDAC/IDAC selftest 1 to 4
Error 15	OVDAC selftest
Error 80	Digital I/O selftest error

Runtime Error Messages

Appendix C lists other error messages that may appear at runtime. If the front panel display shows **OVLD** , this indicates that the output voltage or current is beyond the range of the meter readback circuit. If the front panel display indicates -- -- -- -- -- -- , an GPIB measurement is in progress.

Line Fuse

If the dc source appears "dead" with a blank display and the fan not running, check your power source to be certain line voltage is being supplied to the dc source. If the power source is normal, the dc source fuse may be defective.

1. Turn off the front panel power switch and unplug the power cord.
2. Remove the fuse from the rear panel.
3. If the fuse is defective, replace it with a fuse of the same type (see "Input Connections" in chapter 3).
4. Turn on the dc source and check the operation.

NOTE: If the dc source has a defective fuse, replace it only once. If it fails again, the dc source requires service.

Artisan Technology Group - Quality Instrumentation ... Guaranteed | (888) 88-SOURCE | www.artisantg.com

5

Front panel Operation

Introduction

Here is what you will find in this chapter:

- a complete description of the front panel controls
- front panel programming examples

NOTE: The dc source must be in set to Local mode to use the front panel controls. Press the **Local** key on the front panel to put the unit in local mode.

Front Panel Description

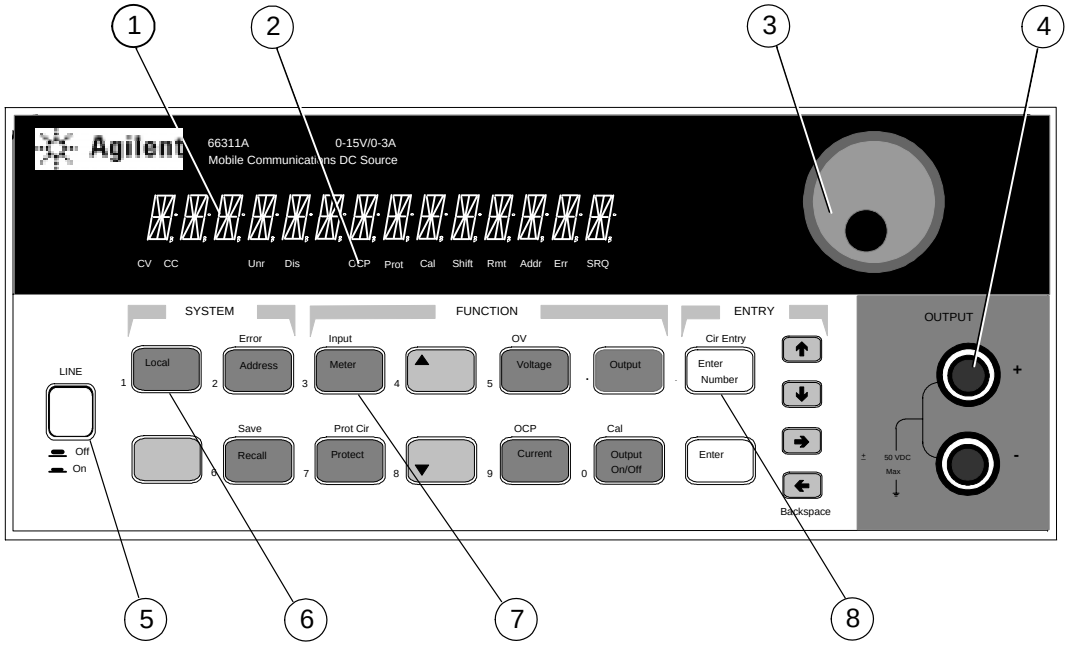

Figure 5-1. Front Panel, Overall View

Artisan Technology Group - Quality Instrumentation ... Guaranteed | (888) 88-SOURCE | www.artisantg.com

① **Display**	14-character vacuum fluorescent display for showing output measurements and programmed values.
② **Annunciators**	Annunciators light to indicate operating modes and status conditions: **CV** The dc source output is in constant-voltage mode. **CC** The dc source output is in constant-current mode. **Unr** The dc source output is in an unregulated state. **Dis** The dc source output is disabled (off). **OCP** The overcurrent protection state is enabled. **Prot** One of the dc source's output protection features is activated. **Cal** The dc source is in calibration mode. **Shift** The Shift key is pressed to access an alternate key function. **Rmt** The selected interface (GPIB or RS-232) is in a remote state. **Addr** The interface is addressed to talk or to listen. **Err** There is a message in the SCPI error queue. **SRQ** The interface is requesting service from the controller.
③ **Rotary Control**	The rotary control lets you set the output voltage or current as well as menu parameters. Press ← and → to select the resolution, then adjust the value with the knob.
④ **Output Connectors**	Front panel binding posts let you connect loads to the front of the unit. Before using the front panel binding posts, make sure that the sense switch on the back of the unit is set to Local.
⑤ **Line**	This turns the dc source on or off.
⑥ **System Keys**	The system keys let you: Return to Local mode (front panel control) Set the dc source GPIB address Set the RS-232 interface communication baud rate and parity bit Display SCPI error codes and clear the error queue Save and recall up to 4 instrument operating configurations
⑦ **Function Keys**	Function access command menus that let you: Enable or disable the output Select metering functions Program output voltage and current Display the protection status state Set and clear protection functions Set the output state at power-on Calibrate the dc source ▲ and ▼ scroll through the front panel menu commands
⑧ **Entry Keys**	Entry keys let you: Enter programming values Increment or decrement programming values ↑ and ↓ select the front panel menu parameters

Artisan Technology Group - Quality Instrumentation ... Guaranteed | (888) 88-SOURCE | www.artisantg.com

System Keys

Refer to the examples later in this chapter for more details on the use of these keys.

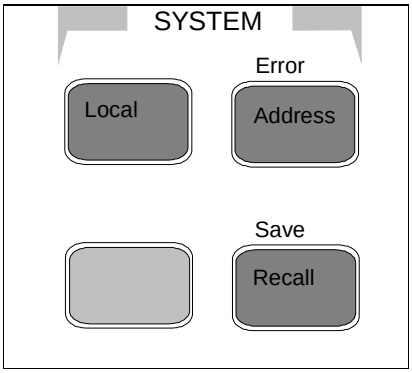

Figure 5-2. System Keys

[ ] This is the blue, unlabeled key, which is also shown as [Shift] in this guide. Pressing this key accesses the alternate or shifted function of a key (such as **ERROR**). Release the key after you press it. The **Shift** annunciator is lit, indicating that the shifted keys are active.

[Local] Press to change the dc source's selected interface from remote operation to local (front panel) operation. Pressing the key will have no effect if the interface state is already Local, Local-with-Lockout, or Remote-with-Lockout.

[Address] Press to access the system address menu. This menu lets you configure the dc source's interface. Address Menu entries are stored in non-volatile memory.

Display	Command Function
ADDRESS <value>	Sets the GPIB Address
INTF <char>	Selects an interface (GPIB or RS232)
BAUDRATE<value>	Selects baud rate (300, 600, 1200, 2400, 4800, 9600)
PARITY <char>	Message parity (NONE, EVEN, ODD, MARK, SPACE)
FLOW <char>	Flow control (XON-XOFF, RTS-CTS, DTR-DSR, NONE)
LANG <char>I	Selects language (SCPI or COMP)

value = a numeric value
char = a character string parameter
Use [▲] and [▼] to scroll through the command list.
Use [↑] and [↓] to scroll through the parameter list.

[Recall] Press to place the dc source into a previously stored state. You can recall up to 4 (0 through 3) previously stored states.

[Shift] [Error] Press to display the system error codes stored in the SCPI error queue. This action also clears the queue. If there is no error in the queue, 0 is displayed.

[Shift] [Save] Press to store an existing dc source state in non-volatile memory. The parameters saved are listed under *SAV in the dc source Programming Guide. You can save up to 4 states (0 through 3).

Artisan Technology Group - Quality Instrumentation ... Guaranteed | (888) 88-SOURCE | www.artisantg.com

Function Keys

Refer to the examples later in this chapter for more details on the use of these keys.

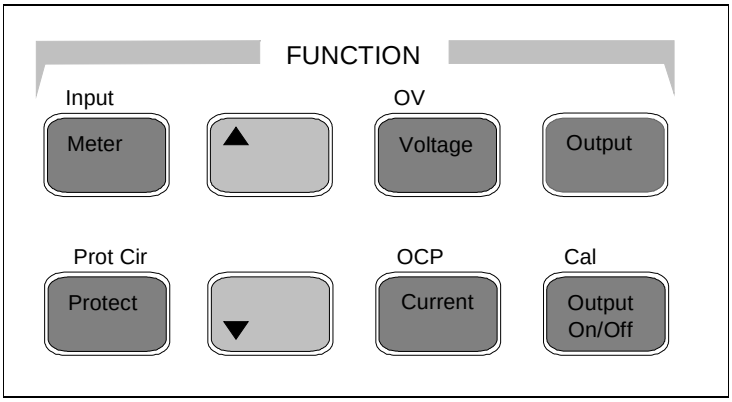

Figure 5-3. Function Keys

Immediate Action Keys

Immediate action keys immediately execute their corresponding function when pressed. Other function keys have commands underneath them that are accessed when the key is pressed.

[Output On/Off] This key toggles the output of the dc source between the on and off states. It immediately executes its function as soon as you press it. When off, the dc source output is disabled and the **Dis** annunciator is on.

[Shift] [Prot Clr] Press this key to reset the protection circuit and allow the unit to return to its last programmed state. The condition that caused the protection circuit to become active must be removed prior to pressing this key, or the unit will shut down again and display the **Prot** annunciator again. (If **FS** protection is displayed on the front panel, the unit must be opened and an internal fuse replaced as described in the Service manual.)

[Shift] [OCP] Press this key to toggle between OCP enabled and disabled. If OCP is enabled the output will become disabled if the output mode changes from CV to CC mode. The OCP annunciator indicates the state of OCP.

Scrolling Keys

Scrolling keys let you move through the commands in the presently selected function menu.

[▲] [▼] Press [▼] to bring up the next command in the list. Press [▲] to go back to the previous command in the list. Function menus are circular; you can return to the starting position by continuously pressing either key. The following example shows the commands in the Input function menu:

[▼] CURR:RANGE <char>

[▼] CURR:DET <char>

Artisan Technology Group - Quality Instrumentation ... Guaranteed | (888) 88-SOURCE | www.artisantg.com

Metering Keys

Metering keys control the metering functions of the dc source. When the unit is operating in front panel meter mode, all front panel measurements are calculated from a total of 2048 readings taken at a 46.8 microsecond sampling rate. Therefore, the total acquisition time for a single front panel measurement is about 100 milliseconds. Refer to “Making Front Panel Measurements” for more information.

NOTE: You can vary the both the sampling rate and the number of data points in each measurement when controlling the unit over the GPIB interface. (Refer to chapter 3 in the Programming Guide).

Meter

Press this key to access the meter menu list. Also use this key to exit a menu at any time and return to meter mode.

Display	Measurement
<reading>V <reading>A	Measures output dc voltage and current
<reading>V MAX	Measures peak output voltage[1]
<reading>V MIN	Measures minimum output voltage[1]
<reading>V HIGH	Measures the high level of a voltage pulse waveform[1]
<reading>V LOW	Measures the low level of a voltage pulse waveform[1]
<reading>V RMS	Measures rms voltage[1]
<reading>A MAX	Measures peak output current[1]
<reading>A MIN	Measures minimum output current[1]
<reading>A HIGH	Measures the high level of a current pulse waveform[1]
<reading>A LOW	Measures the low level of a current pulse waveform[1]
<reading>A RMS	Measures rms current[1]

Shift **Input**

Press this key to access the following metering functions.

Display	Command Function
CURR:RANGE <char>	Select current range (AUTO, LOW or HIGH)
CURR:DET <char>	Select current measurement bandwidth (ACDC or DC)[1]

Notes:
[1]Not available on Agilent 6611C - 6614C or in Compatibility mode
reading = the returned measurement
value = a numeric value
char = a character string parameter
Use ▲ and ▼ to scroll through the menu commands.
Use ↑ and ↓ to scroll through the menu parameters.
Use ← and → to select a digit in a numeric entry field.

Artisan Technology Group - Quality Instrumentation ... Guaranteed | (888) 88-SOURCE | www.artisantg.com

Output Control Keys

Output control keys control the output functions of the dc source.

Voltage

Press this key to access the voltage menu.

Display	Command Function
VOLT <value>	Sets the output voltage

Current

Press this key to access the current menu.

Display	Command Function
CURR <value>	Sets the output current

Output

Press this key to access the output menu list.

Display	Command Function
*RST	Places the dc source in the factory-default state
PON:STATE <char>	Select the power-on state command (RST or RCL0)[1]
RI <char>	Sets the remote inhibit mode (LATCHING, LIVE, or OFF)[1]
DFI <char>	Sets the discrete fault indicator state (ON or OFF)
DFI:SOUR <char>	Selects the DFI source (QUES, OPER, ESB, RQS, or OFF)[2]
PORT <char>	Sets the output port functions (RIDFI or DIGIO)[1]
DIGIO <char>	Sets and reads the I/O port value (0 through 7)
RELAY <char>	Set relay state independent of output (‘‘ON’’ or ‘‘OFF’’[3])
REL:POL <char>	Set relay polarity (‘‘NORM’’ or ‘‘REV’’[3])
PROT:DLY <value>	Sets the output protection delay in seconds

Protect

Press this key to display protection status.

Display	Command Function
OC OT OV RI FS	Status of the protection features (example shows all tripped)
-- -- -- -- --	Status of the protection features (example shows none tripped)

Shift **OV**

Press this key to access the overvoltage protection menu.

Display	Command Function
VOLT:PROT <value>	Sets overvoltage protection level

Shift **Cal**

This key accesses the calibration menu (Refer to Appendix B for details).

Notes:
[1]These parameters are stored in non-volatile memory
[2]These status summary bits are explained in chapter 3 of the Programming Guide
[3]Not available on Agilent 66312A
value = a numeric value
char = a character string parameter
Use ▲ and ▼ to scroll through the menu commands.
Use ↑ and ↓ to scroll through the menu parameters.
Use ← and → to select a digit in a numeric entry field.

Artisan Technology Group - Quality Instrumentation ... Guaranteed | (888) 88-SOURCE | www.artisantg.com

Entry Keys

Refer to the examples later in this chapter for more details on the use of these keys.

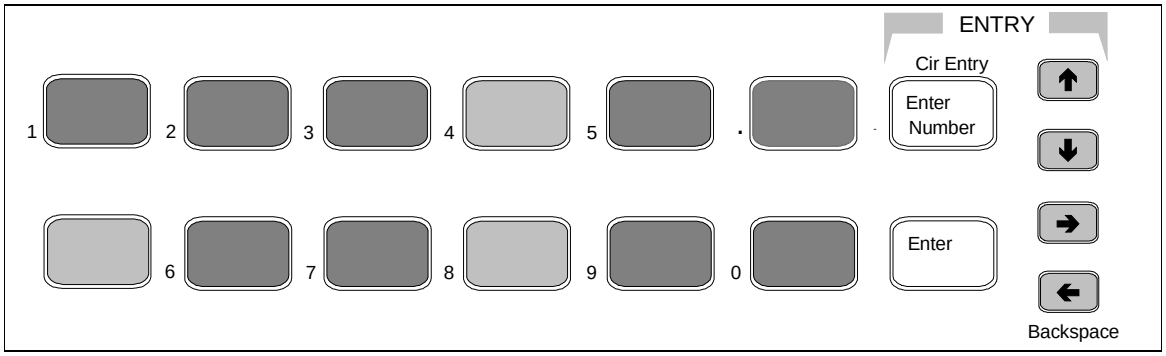

Figure 5-4. Entry Keys

[↑] [↓] These keys let you scroll through choices in a **parameter** list that apply to a specific command. Parameter lists are circular; you can return to the starting position by continuously pressing either key. If the command has a numeric range, these keys increment or decrement the existing value. In meter mode, these keys can be used to adjust the magnitude of the output voltage or current. Only the flashing digit is changed by these keys. Use the ← and → keys to move the flashing digit.

[←] [→] These keys move the flashing digit in a numeric entry field to the right or left. This lets you increment or decrement a specific digit in the entry field using the ↑ and ↓ keys or the RPG knob.

[Enter Number] Used only to access a third level key function - the numeric entry keys. These third level function keys are labeled in green.

[0] - [9] [.] , [–] **0** through **9** are used for entering numeric values. **.** is the decimal point. – is the minus sign. For example, to enter 33.6 press: **Enter Number, 3, 3, . , 6, Enter**.

[Back space] The backspace key deletes the last digit entered from the keypad. This key lets you correct one or more wrong digits before they are entered.

[Shift] [Clear Entry] This key aborts a keypad entry by clearing the value. This key is convenient for correcting a wrong value or aborting a value entry. The display then returns to the previously set function.

[Enter] This key executes the entered value or parameter of the presently accessed command. Until you press this key, the parameters you enter with the other Entry keys are displayed but not entered into the dc source. Before pressing **Enter**, you can change or abort anything previously entered into the display. After **Enter** is pressed, the dc source returns to Meter mode.

Artisan Technology Group - Quality Instrumentation ... Guaranteed | (888) 88-SOURCE | www.artisantg.com

Examples of Front Panel Programming

You will find these examples on the following pages:

1 Setting the output voltage and current
2 Querying and clearing output protection
3 Making front panel measurements
4 Programming the digital port
5 Programming the output relay (option 760 only)
6 Setting the GPIB address or RS-232 parameters
7 Saving and recalling operating states

Similar examples are given in the dc source Programming Guide using SCPI commands.

1 - Setting the Output Voltage and Current

Set the output voltage

	Action	Display
1.	To enter an approximate value without using the voltage menu: On the Entry keypad, press ← or → to select the 1's digit in the voltage field. Then rotate the front panel RPG knob to obtain 7 V. *If the unit is in CC mode, you won't see the output voltage change until the voltage setting is low enough to cause the unit to go into CV mode.*	7.003V 0.004A
2.	The easiest way to enter an accurate value: On the Function keypad, press **Voltage**. On the Entry keypad, press **7, Enter**.	VOLT 7.000
3.	To make minor changes to an existing value: On the Function keypad, press **Voltage**. On the Entry keypad, press ← or → to select the digit in the numeric field that you wish to change. For example, move the flashing digit to the ones column to change a value in this column. Then, press ↑ to scroll from 7.000 to 8.000. Then press **Enter**.	VOLT 8.000

Set the output current

	Action	Display
1.	To enter an approximate value without using the current menu: On the Entry keypad, press ← or → to select the tenths digit in the current field. Rotate the front panel RPG knob to obtain 0.4A. *If the unit is in CV mode, you won't see the output current change until the current setting is low enough to cause the unit to go into CC mode.*	8.003V 0.400A
2.	The easiest way to enter an accurate value: On the Function keypad, press **Current**. On the Entry keypad, press **., 4, Enter**.	CURR 0.400
3.	To make minor changes to an existing value: On the Function keypad, press **Current**. On the Entry keypad, press ← or → to select the digit in the numeric field that you wish to change. For example, move the flashing digit to the tenths column to change a value in this column. Then, press ↑ to scroll from 0.400 to 0.500. Then press **Enter**.	CURR 0.500

Enable the output

	Action	Display
1.	On the Function keypad, press **Output On/Off** to enable the output. The **Dis** annunciator will go off, indicating that the voltage is now applied to the output terminals. The A display indicates the actual output current.	8.003V 0.500A

Artisan Technology Group - Quality Instrumentation ... Guaranteed | (888) 88-SOURCE | www.artisantg.com

2 - Querying and Clearing Output Protection

The dc source will disable its output if it detects an overvoltage or overcurrent fault condition. Other automatic fault conditions (such as overtemperature) also will disable the output.

Query and clear the dc source overcurrent protection feature as follows:

	Action	Display
1.	On the Function keypad, press **Protect**. In this example, OC indicates that an overcurrent condition has occurred. Other protection indicators are: OT (overtemperature), OV (overvoltage), RI (remote inhibit), and FS (internal fuse is open).	OC -- -- -- --
2.	On the Function keypad, press **Current**. This displays the present output current limit. (10% of the maximum rating is the default current limit setting).	CURR 0.2045 (2 amp unit)
3.	To restore normal operation *after the cause of the overcurrent condition has been removed*, press **Shift, Prot Clr**. The **OCP** annunciator then will go off.	

3 - Making Front Panel Measurements

When the dc source is operating in front panel meter mode, all front panel measurements are calculated from a total of 2048 readings taken at a 46.8 microsecond sampling rate. The unit alternates between voltage and current measurements. Therefore, the data acquisition time for a single front panel voltage or current measurement is about 100 milliseconds. The sample rate and number of data points are fixed, and there are no trigger controls for front panel measurements. This fixed sampling rate and data acquisition time combined with a built-in windowing function, reduces errors due to sampling a non-integral number of cycles of a waveform for frequencies of 25 Hz or greater. Note that the windowing function is less accurate when measuring output waveforms for frequencies less than 25 Hz, causing the front panel meter to jitter.

When controlling the unit over the GPIB interface, you can vary both the sampling rate and the number of data points in each measurement. If you are using the Agilent 66312A dc source to measure waveform data, the GPIB interface also lets you qualify the triggers that initiate the measurements. With this flexibility, measurement accuracy can be improved for waveforms with frequencies as low as several Hertz. Refer to chapter 3 in the Programming Guide for more information.

Two current measurement ranges can be selected in the Input menu. A high current range is available for measuring output currents up to 30% higher than the maximum rating of the dc source. A low current range is available for improved resolution when measuring output currents below 20 milliamperes. The low current measurement range is accurate to 0.1% of the reading ±2.5 microamperes. When the current Range is set to AUTO, the unit automatically selects the range that provides the best measurement resolution.

NOTE: If the front panel display indicates OVLD, the output has exceeded the measurement capability of the instrument. If the front panel display indicates -- -- -- -- -- -- , an GPIB measurement is in progress.

As previously mentioned, the Agilent 66312A dc source has the capability of measuring output waveform parameters such as peak, minimum, high level, and low level as illustrated in the following figure.

Artisan Technology Group - Quality Instrumentation ... Guaranteed | (888) 88-SOURCE | www.artisantg.com

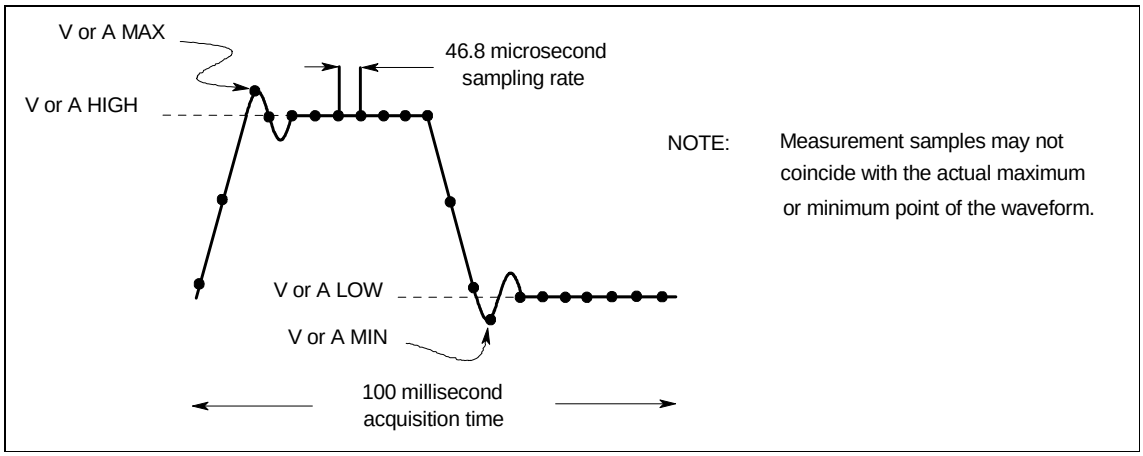

Figure 5-5. Front Panel Pulse Measurement Parameters (Agilent 66312A only)

Use the Meter menu for making front panel measurements:

	Action	Display
1.	For current measurements, press **Shift, Input**. Then press ⬇ until you obtain the CURR:RANG AUTO command. Press **Enter** to activate autoranging. Two other selections are also available. Select the High range when measuring currents above 20 mA. Select the Low range for improved resolution when measuring currents below 20 mA.	CURR:RANG AUTO
2.	For output waveform measurements, press **Shift, Input**. Then press ▼ until you obtain the CURR:DET command. Check to make sure that the ACDC current detector is selected. This provides the best accuracy for waveform measurements. Only select the DC current detector if you are making dc current measurements and you require a dc measurement offset better than 1mA on the High current measurement range.	CURR:DET ACDC

Note: In the Low current measurement range, the current detector is fixed at DC. With the current detector in dc, accurate current measurements cannot be made on waveforms with frequency contents over a few kilohertz.

3. On the Function keypad press **Meter** and press ▼ repeatedly to access the following measurement parameters:

♦ dc voltage and current	<reading>V <reading>A
♦ peak voltage[1]	<reading>V MAX
♦ minimum voltage[1]	<reading>V MIN
♦ high level of a voltage pulse waveform[1]	<reading>V HIGH
♦ low level of a voltage pulse waveform[1]	<reading>V LOW
♦ rms voltage[1]	<reading>V RMS
♦ peak current[1]	<reading>A MAX
♦ minimum current[1]	<reading>A MIN
♦ high level of a current pulse waveform[1]	<reading>A HIGH
♦ low level of a current pulse waveform[1]	<reading>A LOW
♦ rms current[1]	<reading>A RMS

[1]Agilent 66312A only

4 - Programming the Digital Output Port

Artisan Technology Group - Quality Instrumentation ... Guaranteed | (888) 88-SOURCE | www.artisantg.com

Your dc source is shipped with the output port function set to RIDFI mode. In this mode the port functions as a remote inhibit input with a discrete fault indicator output signal. You can also configure the port to act as a Digital Input/Output device.

To configure the RIDFI mode of the port, proceed as follows:

	Action	Display
1.	On the Function keypad, press **Output**.	*RST
2.	Scroll through the Output menu by pressing ▼ . The PORT command lets you select either the RIDFI or the DIGIO function.	PORT RIDFI
3.	Scroll to the RI command to configure the Remote INHibit indicator. Use the ↑ and ↓ keys to select either LIVE or LATCHING, either of which enable the RI indicator. With RI enabled, a low-true on the INH input will disable the output of the unit. LIVE causes the output of the unit to track the state of the INH input. LATCHING latches the output of the unit off in response to the inhibit signal.	RI LIVE RI LATCHING
4.	Access the Output menu again and scroll through the menu. The DFI command lets you enable the Discrete Fault Indicator. Use the ↓ key and select ON to enable the FLT output. With the FLT output enabled, the open-collector logic signal can be used to signal external devices when a fault condition is detected.	DFI ON
5.	Scroll to the DFI:SOUR command to select the internal source that drives this signal. Use the ↓ key to select from the RQS or ESB bits, or the Operation or Questionable status registers. Status summary bits are explained in chapter 3 of the Programming Guide.	DFI:SOUR RQS DFI:SOUR ESB DFI:SOUR OPER DFI:SOUR QUES

To configure the DIGIO mode of the port, proceed as follows:

	Action	Display
1.	On the Function keypad, press **Output**.	*RST
2.	Scroll through the Output menu by pressing ▼. The PORT command lets you select either the RIDFI or the DIGIO function.	PORT DIGIO
3.	Scroll to the DIGIO command to set and read the Digital Input/Output Port. Press **Enter Number** and enter a number from 0 to 7 to program the four bits (0 programs all bits low; 7 programs all bits high). Press **Enter** when done.	DIGIO 5

Artisan Technology Group - Quality Instrumentation ... Guaranteed | (888) 88-SOURCE | www.artisantg.com

5 - Programming the Output Relay (option 760 only)

Units with option 760 have isolation and polarity reversal relays connected to the output and sense terminals. (Option 760 is not available on Agilent 66312A units.)

To control the relays independently of the Output On/Off switch, proceed as follows:

	Action	Display
1.	On the Function keypad, press **Output**, and scroll through the Output menu until you get to the RELAY command. The display indicates whether the relay is presently closed (ON), or open (OFF).	RELAY ON
2.	Use the ↑ and ↓ keys to select either ON to close the relay or OFF to open the relay. *Note that the output relays always open or close whenever the **Output On/Off** key is pressed.*	RELAY OFF

To control the polarity of the output relays, proceed as follows:

	Action	Display
1.	On the Function keypad, press **Output**, and scroll through the Output menu until you get to the REL:POL command. The display indicates the present condition of the relay (either normal or reversed).	REL:POL NORM
2.	Use the ↑ and ↓ keys to select either NORM or REV. NORMal causes the relay polarity to be the same as the dc source output REVerse causes the relay polarity to be opposite to that of the dc source output.	RELAY OFF

6 - Setting the GPIB Address and RS-232 Parameters

Your dc source is shipped with the GPIB address set to 5 This address can only be changed from the front panel using the Address menu located under the **Address** key. This menu is also used to select the RS-232 interface and specify RS-232 parameters such baud rate and parity.

Set the GPIB address as follows:

	Action	Display
1.	On the System keypad, press **Address**.	ADDRESS 5
2.	Enter the new address. For example, Press **Enter Number, 7, Enter**.	ADDRESS 7

Configure the RS-232 interface as follows:

	Action	Display
1.	On the System keypad, press **Address**.	ADDRESS 5
2.	Scroll through the Address menu by pressing ▼. The interface command lets you select the RS-232 interface. The baudrate command lets you select the baudrate. The parity command lets you select the parity. The flow command selects the flow control options.	INTF RS232 BAUDRATE 9600 PARITY EVEN XON-XOFF
3.	The ↑ and ↓ keys let you select the command parameters.	

Artisan Technology Group - Quality Instrumentation ... Guaranteed | (888) 88-SOURCE | www.artisantg.com

7 - Saving and Recalling Operating States

NOTE: This capability is only available when the unit is set to the SCPI programming language.

You can save up to 4 states (from location 0 to location 3) in non-volatile memory and recall them from the front panel. All programmable settings are saved.

Save an operating state in location 1 as follows:

	Action	Display
1.	Set the instrument to the operating state that you want to save.	
2.	Save this state to location 1. Press **Save, Enter Number, 1, Enter**.	*SAV 1

Recall a saved state as follows:

	Action	Display
1.	Recall the state saved in location 1 by pressing **Recall, Enter Number, 1, Enter**	*RCL 1

Select the power-on state of the dc source as follows:

	Action	Display
1.	On the Function keypad, press **Output**, and scroll through the Output menu until you get to the PON state command.	PON:STATE RST
2.	Use the ↑ and ↓ keys to select either RST or RCL0. RST sets the power-on state of the unit as defined by the *RST command. RCL0 sets the power-on state of the unit to the state saved in *RCL location 0.	

Clear the non-volatile memory of the dc source as follows:

	Action	Display
1.	On the Function keypad, press **Output, Enter**. This returns the unit to the factory-default settings.	*RST
2.	Save these settings to location 1. Press **Save, Enter Number, 1, Enter**.	*SAV 1
3.	Repeat step #2 for memory locations 2 through 4..	*SAV 2 *SAV 3 *SAV 4

Artisan Technology Group - Quality Instrumentation ... Guaranteed | (888) 88-SOURCE | www.artisantg.com

Artisan Technology Group - Quality Instrumentation ... Guaranteed | (888) 88-SOURCE | www.artisantg.com

A

Specifications

Specifications

Table A-1 lists the specifications of the dc source. Specifications are warranted over the ambient temperature range of 0 to 55 °C. Unless otherwise noted, specifications apply when measured at the rear terminals after a 30-minute warm-up period.

Table A-1. Performance Specifications

Parameter		Agilent 6611C	Agilent 6612C Agilent 66312A	Agilent 6613C	Agilent 6614C
Output Ratings	Voltage: Current:	0 – 8 V 0-5 A	0 – 20 V 0 – 2 A	0 – 50 V 0 –1 A	0 – 100 V 0 – 0.5 A
Programming Accuracy (@ 25°C ±5°C)	Voltage: 0.05% + +Current: 0.05% +	5 mV 2 mA[1]	10 mV 1 mA[1]	20 mV 0.75 mA[1]	50 mV 0.5 mA[1]
DC Measurement Accuracy (via GPIB or front panel meters with respect to actual output @ 25°C ±5°C)	Voltage: 0.03% + Low Current range –20 mA to +20 mA: 0.1% + High Current range +20 mA to +rated I: 0.2% + –20 mA to – rated I: 0.2% +	2 mV[2] 2.5 µA 0.5mA[3] 1.1mA	3 mV[2] 2.5 µA 0.25 mA[3] 0.85 mA	6 mV[2] 2.5 uA 0.2 mA[3] 0.8 mA	12 mV[2] 2.5 µA 0.1 mA[3] 0.7 mA
Ripple and Noise (in the range of 20 Hz to 20 MHz with outputs ungrounded or with either terminal grounded)	Voltage (rms/p-p): Current (rms):	0.5 mV/3 mV 2 mA	0.5 mV/3 mV[4] 1 mA	0.5 mV/4 mV 1 mA	0.6 mV/5 mV 1 mA
Load Regulation[5] (change in output voltage or current for any load change within ratings)	Voltage: Current:	2 mV 1 mA	2 mV 0.5 mA	4 mV 0.5 mA	5 mV 0.5 mA
Line Regulation (change in output voltage or current for any line change within ratings)	Voltage: Current:	0.5 mV 0.5 mA	0.5 mV 0.5 mA	1 mV 0.25 mA	1 mV 0.25 mA
Transient Response Time[5] (for the output voltage to recover to its previous level within 0.1% of the voltage rating of the unit or 20 millivolts following a change in load current of up to 50% of the output current rating)		< 100 µs			

[1]0.05% + 3.32mA (Agilent 6611C), 1.53mA (Agilent 66312A/12C), 1.01mA (Agilent 6613C), 0.63mA (Agilent 6614C) when programming between zero and 0.03% of full scale current.
[2]Applies for output voltages greater than 10mV (Agilent 6611C/12C), 25mV (Agilent 6613C), and 50mV (Agilent 6614C).
[3]For Agilent 66312A: applies in SCPI mode, with current detector set to DC. With current detector set to ACDC, accuracy is 0.2% + four times the fixed error value. In COMPatibility mode, accuracy is 0.2% + six times the fixed error value.
[4]For Agilent 66312A (from 1 MHz to 20 MHz) = 0.5mV/15mV.
[5]Applies at rear terminals with unit set to remote sensing and with sense terminals externally jumpered to their respective output terminals.

Artisan Technology Group - Quality Instrumentation ... Guaranteed | (888) 88-SOURCE | www.artisantg.com

Supplemental Characteristics

Table A-2 lists the supplemental characteristics, which are not warranted but are descriptions of typical performance determined either by design or type testing.

Table A-2. Supplemental Characteristics

Parameter		Agilent 6611C	Agilent6612C Agilent 66312A	Agilent 6613C	Agilent 6614C
Input Rating (at full load)	100 Vac mains: 120 Vac mains: 220 Vac mains: 230 Vac mains:	100 Vac nominal, 50/60 Hz, 2A, 200 VA max. 120 Vac nominal, 50/60 Hz, 1.7A, 200 VA max. 220 Vac nominal, 50/60 Hz, 0.95A, 200 VA max. 230 Vac nominal, 50/60 Hz, 0.85A, 200 VA max.			
Output Programming Range	Voltage: Currrent: OVP:	0 – 8.190 V 0 – 5.118 A 12 V	0 – 20.475 V 0 – 2.0475 A 0 – 22 V	0 – 51.188 V 0 – 1.0238 A 0-55 V	0 - 102.38 V 0 – 0.5118 A 0 – 110 V
Average Programming Resolution	Voltage: Current: OVP:	2 mV 1.25 mA 60 mV	5 mV 0.5 mA 100 mV	12.5 mV 0.25 mA 250 mV	25 mV 0.125 mA 500 mV
OVP Accuracy	2.4 % +	200 mV[1]	240 mV	600 mV	1.2 V
Maximum Current Measurement		7 A	2.43 A	1.28 A	0.7 A
Average Current Measurement Resolution	High Range: Low Range:	213 uA 0.6 uA	74 uA 0.6 uA	39 uA 0.6 uA	21 uA 0.6 uA
Sink Current[2]		- 3 A	- 1.2 A	- 0.6 A	- 0.3 A
Programming Accuracy **Temperature Coefficient** (change/ C^O)	Voltage: 0.01% + Current: 0.01% + OVP: 0.015% +	0.15 mV 30 uA 2 mV	0.25 mV 12 uA 4 mV	0.5 mV 6 uA 10 mV	1 mV 3 uA 20 mV
Readback Accuracy **Temperature Coefficient** (change/C^O)	Voltage: 0.01% + Current (DC): 0.02% + Current (ACDC): 0.05% + Current (Low Range): 0.01% +	60 uV 25 uA 160 uA 0.3 uA	150 uV 10 uA 80 uA 0.3 uA	500 uV 5 uA 40 uA 0.3 uA	700 uV 3 uA 20 uA 0.3 uA
Drift[3]	Voltage: 0.01% + Current: 0.01% +	0.25 mV 50 uA	0.5 mV 20 uA	1 mV 10 uA	1 mV 10 uA
Output Voltage Rise/Fall Time (for a change from 10% to 90% or 90% to 10% of the total excursion)		2 ms			
Output Voltage Settling Time (to settle within 1 LSB or 0.025% times the rated voltage of the final value)		6 ms			

[1] Agilent 6611C Option 760 = 2.4% + 500mV.

[2] The sink current does not track the programmed current.

[3] Following a 30 minute warm-up, the change in output over 8 hours, under constant ambient, load and line operating conditions.

Artisan Technology Group - Quality Instrumentation ... Guaranteed | (888) 88-SOURCE | www.artisantg.com

Table A-2. Supplemental Characteristics (continued)

Parameter		Agilent 66312A	Agilent 6611C - 6614C
Dynamic Measurement Accuracy	Instantaneous Voltage: Instantaneous Current:	0.03% + 5 mV 0.6% + 1 mA[1]	not applicable
Dynamic Measurement System	Buffer Length: Sampling Rate Range:	4096 points 15.6µs–31,200s	not applicable
Measurement Time (voltage or current)		50 ms average (includes the default time of 30 ms[2] for acquiring data, and a 20 ms data processing overhead)	
Command Processing Time		4 ms average (for output to begin to change following receipt of digital data)	
Remote Sense Capability		Up to 2 V can be dropped across each load lead. (add 2 mV to the voltage load regulation specification for each 1 V change in the positive output lead due to load current change.)	
Savable Instrument States (applies only in SCPI mode)		4 (in locations 0 to 3)	
RS-232 Interface Capabilities	Baud rates: Data formats: Language:	300 600 1200 2400 4800 9600 7 bits even or odd parity; 8 bits without parity SCPI or COMPatibility[3]	
GPIB Interface Capabilities	Language: Interface:	SCPI or COMPatibility[3] AH1, C0, DC1, DT1, E1, L4, PP0, RL1, SH1, SR1, T6	
INH/FLT Characteristics	Maximum ratings: FLT Terminals: INH Terminals:	16.5 Vdc between terminals 1 and 2; 3 and 4; and from terminals 1 or 2 to chassis ground Low-level output current = 1.25 mA max. Low-level output voltage = 0.5 V max. Low-level input voltage = 0.8 V max. High-level input voltage = 2 V min. Low-level input current = 1 mA Pulse width = 100 µs min. Time delay = 4 ms typical	
Digital I/O Characteristics	Maximum ratings: Digital OUT Port 0,1,2 (open collector)	same as INH/FLT Characteristics Output leakage @ 16V = 0.1 mA (ports 0,1) = 12.5 mA (port 2) Output leakage @ 5V = 0.1 mA (ports 0,1) = 0.25 mA (port 2) Low-level output sink current @ 0.5 V = 4 mA Low-level output sink current @ 1 V = 50 mA	

[1]For full scale current changes with a risetime of 20 µs, an additional 0.5% error exists in the first data point in the buffer after the change. The error percentage increases proportionally with the decrease in risetime.
[2]This time may be reduced by changing the default conditions of 2048 data points, however, measurement accuracy will be reduced.
[3]COMPatibility language is used to program the Agilent 663xA Series power supplies.

Artisan Technology Group - Quality Instrumentation ... Guaranteed | (888) 88-SOURCE | www.artisantg.com

Table A-2. Supplemental Characteristics (continued)

Parameter		Agilent 66312A	Agilent 6611C - 6614C
Digital I/O Characteristics (continued)	Digital IN Port 2: (internal pull-up)	Low-level input current @ 0.4 V = 1.25 mA High-level input current @ 5 V = 0.25 mA Low-level input voltage = 0.8 V max. High level input voltage = 2.0 V min.	
Isolation to Ground (Maximum from either output terminal to chassis)		50 Vdc	240 Vdc
Recommended Calibration Interval		1 year (from the date the unit is put into service)	
Regulatory Compliance	Listing pending: Certified to: Conforms to: Complies with:	UL 3111-1 CSA 22.2 No. 1010.1 IEC 1010-1 EMC directive 89/336/EEC (ISM Group1 Class B)	
Dimensions (see figure 3-1)	Height: Width: Depth:	88.1 mm (3.5in.) 212.8 mm (8.4in.) 444.4 mm (17.5 in.)	88.1 mm (3.5in.) 212.8 mm (8.4in.) 368.3 mm (14.5 in.)
Net weight		8.8 kg (19.5 lbs.)	8.2 kg (18.16 lbs.)
Shipping weight		11.1 kg (24.5 lbs.)	10.6 kg (23.5 lbs.)

Artisan Technology Group - Quality Instrumentation ... Guaranteed | (888) 88-SOURCE | www.artisantg.com

B

Verification and Calibration

Introduction

This appendix includes verification and calibration procedures for the Agilent 66312A, 6611C, 6612C, 6613C and 6614C dc source. Instructions are given for performing the procedures either from the front panel or from a controller over the GPIB.

The verification procedures do not check all the operating parameters, but verify that the dc source is performing properly. Performance Tests, which check all the specifications of the dc source, are given in the applicable dc source Service Manual.

Important Perform the verification procedures before calibrating your dc source. If the dc source passes the verification procedures, the unit is operating within its calibration limits and does not need to be recalibrated.

Equipment Required

The equipment listed in the following table, or the equivalent to this equipment, is required for verification and calibration.

Table B-1. Equipment Required

Equipment	Characteristics	Recommended Model
Digital Voltmeter	Resolution: 10 nV @ 1 V Readout: 8.5 digits Accuracy: >20 ppm	Agilent 3458A
Current Monitor[1]	15 A (0.1 Ω), ±0.04%, TC=5ppm/°C	Guildline 9230/15
Load Resistor (3 W min. TC=20ppm/°C)	400 Ω (Agilent 6611C calibration and all models verification.) 1.1 kΩ (Agilent 6612C & 66312A calibration) 2500 Ω (Agilent 6613C calibration) 5000 Ω (Agilent 6614C calibration)	p/n 0811-2878
Power Supply	8 V @ 5 A	Agilent 6611C or Agilent 6631B
GPIB Controller	Full GPIB capabilities	HP Series 200/300 or equivalent

[1]The 4- terminal current shunt is used to eliminate output current measurement error caused by voltage drops in the load leads and connections. It has special current-monitoring terminals inside the load connection terminals. Connect the voltmeter directly to these current-monitoring terminals.

Test Setup

Figure B-1 shows the setup for the tests. Be certain to use load leads of sufficient wire gauge to carry the full output current (see chapter 3).

Artisan Technology Group - Quality Instrumentation ... Guaranteed | (888) 88-SOURCE | www.artisantg.com

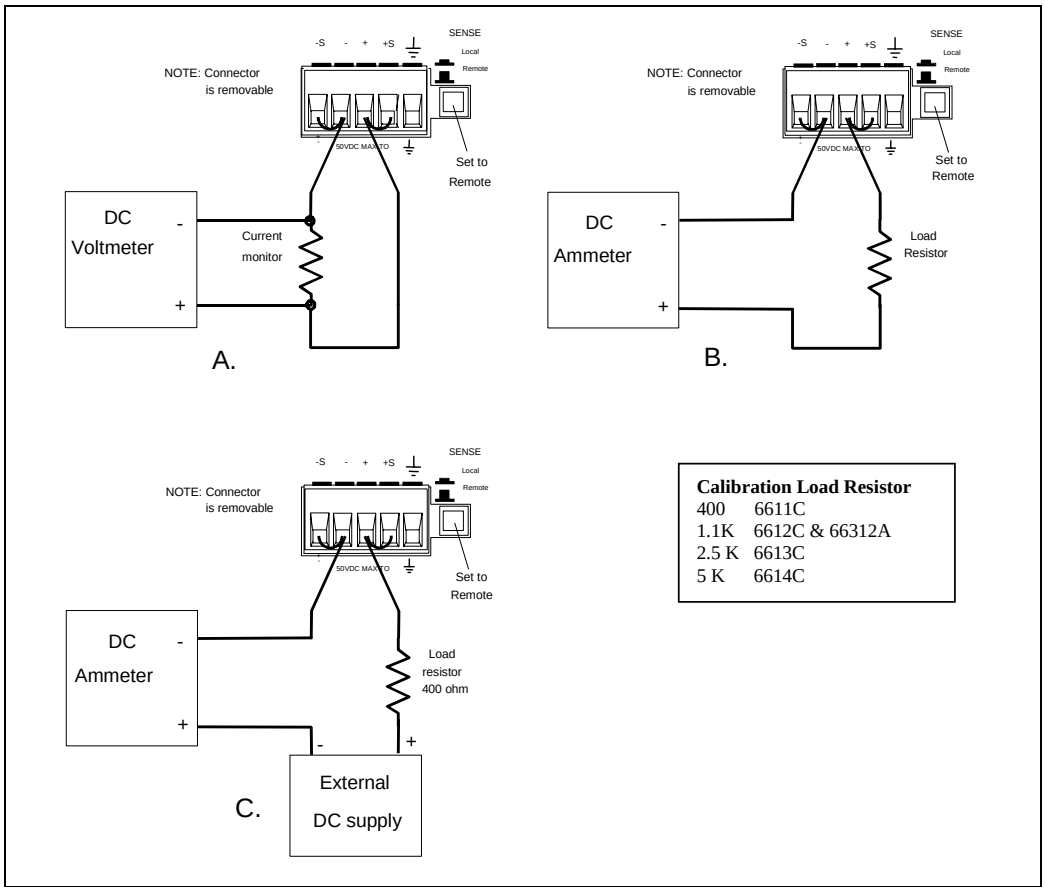

Figure B-1. Verification & Calibration Test Setup

Performing the Verification Tests

NOTE: The verification procedure can only be performed using the SCPI language commands. Use either the front panel **Address** key to access the LANG command, or use the SYSTem:LANGuage command to change the programming language to SCPI.

The following procedures assume you understand how to operate the dc source from the front panel as explained in chapter 5.

When performing the verification tests from an GPIB controller, you may have to consider the relatively slow settling times and slew rates of the dc source as compared to computer and system voltmeters. Suitable WAIT statements can be inserted into the test program to give the dc source time to respond to the test commands.

Perform the following tests for operation verification in the order indicated.

1. Turn-On Checkout
2. Voltage Programming and Measurement Accuracy
3. Current Programming and Measurement Accuracy

Artisan Technology Group - Quality Instrumentation ... Guaranteed | (888) 88-SOURCE | www.artisantg.com

Table B-2. Verification Programming Values

	Full scale Voltage	Full Scale Current	Imax	Isink
6611C	8	5	5.1188	- 3 A
6612C/66312A	20	2	2.0475	- 1.2 A
6613C	50	1	1.0238	- 0.6 A
6614C	100	0.5	0.5118	- 0.3 A

Turn-On Checkout

Perform the Turn-On Checkout as directed in chapter 4.

NOTE: The dc source must pass turn-on selftest before you can proceed with the verification tests.

Voltage Programming and Measurement Accuracy

This test verifies the voltage programming, GPIB measurement, and front panel meter functions. Values read back over the GPIB should be the same as those displayed on the front panel. Measure the dc output voltage at the output terminals. Make sure the sense switch is set to remote and the sense terminals are directly jumpered to the output terminals.

	Action	Normal Result
1.	Turn off the dc source and connect a DMM to the output terminals.	
2.	Turn on the dc source with no load on the output. Set the output voltage to 0 V and the output current to full scale (see table B-2). Press **Output On/Off** to enable the output.	Output voltage near 0 V. Output current near 0 A.
3.	Record voltage readings at the DMM and on the front panel display.	Readings within low voltage limits (see table B-3, 4, 5 or 6).
4.	Set the output voltage to the full scale rated voltage (see table B-2).	Output voltage near full scale.
5.	Record voltage readings at the DMM and on the front panel display.	Readings within high voltage limits (see table B-3, 4, 5 or 6).

Current Programming and Measurement Accuracy

This test verifies the current programming and measurement. Connect the appropriate current monitor (see table B-1) as shown in figure B-1A.

Current Programming and Measurement (High Range)

	Action	Normal Result
1.	Turn off the dc source and connect the DMM and current monitor as shown in figure B-1A.	
2.	Turn on the dc source, access the Input menu, and set the current sense detector to DC.	CURR:DET DC
3.	Set the output voltage to 5 V and the current to 0 A. Press **Output On/Off** to enable the output.	Output current near 0 A.
4.	Divide the voltage drop across the current monitor by its resistance	Readings within low current

Artisan Technology Group - Quality Instrumentation ... Guaranteed | (888) 88-SOURCE | www.artisantg.com

	to convert the value to amperes. Record the value.	limits (see table B-3, 4, 5 or 6).
5.	Set the output current to full scale (see table B-2)..	
6.	Divide the voltage drop across the current monitor by its resistance to convert the value to amperes. Record this value and the current reading on the front panel display.	Readings within high current limits (see table B-3, 4, 5 or 6).

Current Measurement (Low Range)

	Action	Normal Result
7.	Turn off and connect the dc source as shown in Figure B-1B using the 400 ohm load resistor. Set the DMM to operate in current mode.	
8.	Turn on the dc source, access the Input menu, and set the current range to LOW.	CURR:RANG LOW
9.	Set the output voltage to 0 V and the current to full scale (see table B-2). Press **Output On/Off** to enable the output.	Output current near 0 A.
10.	Record the current reading from the DMM as well as from the front panel display. The difference between the two readings should be within the limits specified in the table.	Readings within low current measurement (see table B-3, 4, 5 or 6).
11.	Set the output voltage to 8 V.	Output current near +20 mA.
12.	Record the current reading from the DMM as well as from the front panel display. The difference between the two readings should be within the limits specified in the table.	Readings within high current measurement (see table B-3, 4, 5 or 6).

Current Sink Measurement

	Action	Normal Result
13.	Turn off the dc source and connect an external supply to the output of the unit as shown in figure B-1C using the 400 ohm load resistor. Set the DMM to operate in current mode.	
14.	Turn on the dc source, access the Input menu, and set the current range to LOW.	CURR:RANG LOW
15.	Access the Input menu and set the current sense detector to DC.	CURR:DET DC
16.	Turn on the external supply and program it to 8 volts and 5 A. Program the dc source to 0 V and 0.5 A. Press **Output On/Off** to enable the output.	Output current near –20 mA.
17.	Record the current reading from the DMM as well as from the front panel display. The difference between the two readings should be within the limits specified in the table.	Readings within low current sink measurement (see table B-3, 4, 5 or 6).
18.	Access the Input menu and set the current range to HIGH.	CURR:RANG HIGH
19.	Short out the load resistor by connecting a jumper across it.	Output current near –Isink (see table B-2)
20.	Record the current reading from the DMM as well as from the front panel display. The difference between the two readings should be within the limits specified in the table.	Readings within high current sink measurement (see table B-3, 4, 5 or 6).

Artisan Technology Group - Quality Instrumentation ... Guaranteed | (888) 88-SOURCE | www.artisantg.com

Table B-3. Verification Test Record for Agilent 6611C

Model Agilent 6611C	**Report No._____**	**Date_____**	
Test Description	**Minimum Specification**	**Recorded Results**	**Maximum Specification**
Voltage Programming and Measurement			
Low Voltage V_{out}	–5 mV	_____V	+5 mV
Front Panel measurement	V_{out} –2 mV	_____mV	V_{out} +2 mV
High Voltage V_{out}	7.991 V	_____V	8.009 V
Front Panel measurement	V_{out} –4.4 mV	_____mV	V_{out} +4.4 mV
Current Programming and Measurement (High Range)			
Low Current I_{out}	–2 mA	_____A	2 mA
High Current I_{out}	4.9955 A	_____A	5.0045 A
Front Panel measurement	I_{out} –10.5 mA	_____mA	I_{out} +10.5 mA
Current Measurement (Low Range)			
Low Current measurement	I_{out} –2.5 µA	_____µA	I_{out} +2.5 µA
High Current measurement	I_{out} –22.5 µA	_____µA	I_{out} +22.5 µA
Current Sink Measurement			
Low Current Sink measurement	I_{sink} –22.5 µA	_____µA	I_{sink} +22.5 µA
High Current Sink measurement	I_{sink} –11.1 mA	_____mA	I_{sink} +11.1 mA

Table B-4. Verification Test Record for Agilent 66312A or Agilent 6612C

Model Agilent_____	**Report No._____**	**Date_____**	
Test Description	**Minimum Specification**	**Recorded Results**	**Maximum Specification**
Voltage Programming and Measurement			
Low Voltage V_{out}	–10 mV	_____V	+10 mV
Front Panel measurement	V_{out} –3 mV	_____mV	V_{out} +3 mV
High Voltage V_{out}	19.980 V	_____V	20.020 V
Front Panel measurement	V_{out} –9 mV	_____mV	V_{out} +9 mV
Current Programming and Measurement (High Range)			
Low Current I_{out}	–1 mA	_____A	1 mA
High Current I_{out}	1.998 A	_____A	2.002 A
Front Panel measurement	I_{out} –4.5 mA	_____mA	I_{out} +4.5 mA
Current Measurement (Low Range)			
Low Current measurement	I_{out} –2.5 µA	_____µA	I_{out} +2.5 µA
High Current measurement	I_{out} –22.5 µA	_____µA	I_{out} +22.5 µA
Current Sink Measurement			
Low Current Sink measurement	I_{sink} –22.5 µA	_____µA	I_{sink} +22.5 µA
High Current Sink measurement	I_{sink} –4.85 mA	_____mA	I_{sink} +4.85 mA

Artisan Technology Group - Quality Instrumentation ... Guaranteed | (888) 88-SOURCE | www.artisantg.com

Table B-5. Verification Test Record for Agilent 6613C

Model Agilent 6613C	**Report No._____**	**Date_____**	
Test Description	**Minimum Specification**	**Recorded Results**	**Maximum Specification**
Voltage Programming and Measurement			
Low Voltage V_{out}	–20 mV	_____V	+20 mV
Front Panel measurement	V_{out} –6 mV	_____mV	V_{out} +6 mV
High Voltage V_{out}	49.955 V	_____V	50.045 V
Front Panel measurement	V_{out} –21 mV	_____mV	V_{out} +21 mV
Current Programming and Measurement (High Range)			
Low Current I_{out}	–0.5 mA	_____A	0.5 mA
High Current I_{out}	0.999 A	_____A	1.001 A
Front Panel measurement	I_{out} –2.2 mA	_____mA	I_{out} +2.2 mA
Current Measurement (Low Range)			
Low Current measurement	I_{out} –2.5 µA	_____µA	I_{out} +2.5 µA
High Current measurement	I_{out} –22.5 µA	_____µA	I_{out} +22.5 µA
Current Sink Measurement			
Low Current Sink measurement	I_{sink} –22.5 µA	_____µA	I_{sink} +22.5 µA
High Current Sink measurement	I_{sink} –2.8 mA	_____mA	I_{sink} +2.8 mA

Table B-6. Verification Test Record for Agilent 6614C

Model Agilent 6614C	**Report No._____**	**Date_____**	
Test Description	**Minimum Specification**	**Recorded Results**	**Maximum Specification**
Voltage Programming and Measurement			
Low Voltage V_{out}	–50 mV	_____V	+50 mV
Front Panel measurement	V_{out} –12 mV	_____mV	V_{out} +12 mV
High Voltage V_{out}	99.900 V	_____V	100.100 V
Front Panel measurement	V_{out} –42 mV	_____mV	V_{out} +42 mV
Current Programming and Measurement (High Range)			
Low Current I_{out}	–0.25 mA	_____A	0.25 mA
High Current I_{out}	0.4995 A	_____A	0.5005 A
Front Panel measurement	I_{out} –1.1 mA	_____mA	I_{out} +1.1 mA
Current Measurement (Low Range)			
Low Current measurement	I_{out} –2.5 µA	_____µA	I_{out} +2.5 µA
High Current measurement	I_{out} –22.5 µA	_____µA	I_{out} +22.5 µA
Current Sink Measurement			
Low Current Sink measurement	I_{sink} –22.5 µA	_____µA	I_{sink} +22.5 µA
High Current Sink measurement	I_{sink} –1.7 mA	_____mA	I_{sink} +1.7 mA

Artisan Technology Group - Quality Instrumentation ... Guaranteed | (888) 88-SOURCE | www.artisantg.com

Performing the Calibration Procedure

NOTE: The calibration procedure can only be performed using the SCPI language commands. Use either the front panel **Address** key to access the LANG command, or use the SYSTem:LANGuage command to change the programming language to SCPI.

Table B-1 lists the equipment required for calibration. Figure B-1 shows the test setup.

You do not have to do a complete calibration each time. If appropriate, you may calibrate only the voltage or current and proceed to "Saving the Calibration Constants". However, the voltage or current calibration sequence must be performed in its entirety. The following parameters may be calibrated:

- voltage programming and measurement
- overvoltage protection (OVP)
- current programming and measurement
- low range measurement
- ac current measurement

Front Panel Calibration Menu

The Entry keypad is used for calibration functions.

Shift Cal — Press this key to access the calibration menu.

Display	Command Function
CAL ON <value>	Turns calibration mode on when the correct password value is entered.
CAL OFF	Turns calibration mode off
CAL:LEV <char>	Advance to next step in sequence (P1 or P2).
CAL:DATA <value>	Enter an external calibration measurement.
CAL:VOLT	Begin voltage calibration sequence
CAL:VOLT:PROT	Begin voltage protection calibration
CAL:CURR	Begin high range current calibration sequence
CAL:CURR:MEAS:LOW	Begin low range current measurement calibration
CAL:CURR:MEAS:AC	Begin ac current calibration sequence
CAL:SAVE	Saves the calibration constants in non-volatile memory.
CAL:PASS <value>	Set new calibration password.

Notes:
value = a numeric value
char = a character string parameter
Use ▲ and ▼ to scroll through the menu commands.
Use ↑ and ↓ to scroll through the menu parameters.
Use ← and → to select a digit in a numeric entry field.

Front Panel Calibration

Artisan Technology Group - Quality Instrumentation ... Guaranteed | (888) 88-SOURCE | www.artisantg.com

These procedures assume you understand how to operate front panel keys (see chapter 5).

Enable Calibration Mode

	Action	Display
1.	Reset the unit by selecting **Output**, scrolling to *RST and pressing **Enter**.	*RST
2.	Press **Output On/Off** to enable the output.	00.003V 0.0006A
3.	To begin calibration press **Shift Cal**, scroll to CAL ON and press **Enter**.	CAL ON 0.0
4.	Enter the calibration password from Entry keypad and press **Enter**. lf the password is correct the **Cal** annunciator will come on.	
	If CAL DENIED appears, then an internal switch has been set to prevent the calibration from being changed. (See the Service Manual.)	CAL DENIED
	lf the password is incorrect, an error occurs. If the active password is lost, the calibration function can be recovered by setting an internal switch that defeats password protection. (See the Service Manual.)	OUT OF RANGE

Voltage Programming and Measurement Calibration

	Action	Display
5.	Connect the DMM (dc volts mode) directly to the dc source. Do not connect the load resistor or current shunt.	
6.	Press **Shift Cal**, scroll to CAL VOLT, and press **Enter**.	CAL:VOLT
7.	Press **Shift Cal**, scroll to CAL LEV, and press **Enter** to select the first calibration point.	CAL:LEV P1
8.	Press **Shift Cal**, scroll to CAL DATA, press **Enter Number**, and enter the voltage value displayed on the DMM.	CAL:DATA 0.00
9.	Press **Shift Cal**, scroll to CAL LEV, use ↓ to scroll to P2 (the second calibration point), and press **Enter**.	CAL:LEV P2
10.	Press **Shift Cal**, scroll to CAL DATA, press **Enter Number**, and enter the second voltage value displayed on the DMM.	CAL:DATA 0.00

Overvoltage Protection Calibration

	Action	Display
11.	Press **Shift Cal**, scroll to CAL VOLT PROT, and press **Enter**.	CAL:VOLT:PROT
12.	Wait for the dc source to compute the OVP calibration constant. The display returns to Meter mode when the calculation is complete.	

Artisan Technology Group - Quality Instrumentation ... Guaranteed | (888) 88-SOURCE | www.artisantg.com

Current Programming and High-Range Measurement Calibration

	Action	Display
13.	Connect the appropriate current monitor as shown in figure B-1A. Connect the DMM (in dc mode) across the current shunt.	
14.	Press **Shift Cal**, scroll to CAL CURR, and press **Enter**.	CAL:CURR
15.	Press **Shift Cal**, scroll to CAL LEV, and press **Enter** to select the first calibration point.	CAL:LEV P1
16.	Press **Shift Cal** and scroll to CAL DATA. Wait for the DMM reading to stabilize. Then read the DMM and compute the first current value (DMM reading ÷ shunt resistance). Press **Enter Number** and enter the first current value.	CAL:DATA 0.00
17.	Press **Shift Cal**, scroll to CAL LEV, use ↓ to scroll to P2 (the second calibration point), and press **Enter**.	CAL:LEV P2
18.	Press **Shift Cal** and scroll to CAL DATA. Wait for the DMM reading to stabilize. Then read the DMM and compute the second current value (DMM reading ÷ shunt resistance). Press **Enter Number** and enter the second current value.	CAL:DATA 0.00

Low-Range Current Measurement Calibration

	Action	Display
19.	Press **Shift Cal**, scroll to CAL CURR MEAS LOW, and press **Enter**.	CAL:CURR:MEAS:LOW
20.	Connect the appropriate calibration load resistor as shown in figure B-1B. Connect the DMM (in current mode) in series with the load.	
21.	Press **Shift Cal**, scroll to CAL LEV, and press **Enter** to select the first calibration point.	CAL:LEV P1
22.	Press **Shift Cal** and scroll to CAL DATA. Wait for the DMM reading to stabilize. Then press **Enter Number** and enter the current reading displayed on the DMM.	CAL:DATA 0.00

AC Current Measurement Calibration (Agilent 66312A only)

	Action	Display
23.	Disconnect all loads from the dc source.	
24.	Press **Shift Cal**, scroll to CAL CURR MEAS AC, and press **Enter**.	CAL:CURR:MEAS AC
25.	Wait for the dc source to compute the ac current calibration constant. The display returns to Meter mode when the calculation is complete.	

Artisan Technology Group - Quality Instrumentation ... Guaranteed | (888) 88-SOURCE | www.artisantg.com

Saving the Calibration Constants

WARNING: Storing calibration constants overwrites the existing ones in non-volatile memory. If you are not sure you want to permanently store the new constants, omit this step. The dc source calibration will then remain unchanged.

	Action	Display
26.	Press **Shift Cal**, scroll to CAL SAVE, and press **Enter**.	CAL:SAVE
27.	Press **Shift Cal**, select CAL OFF, and press **Enter** to exit Calibration mode. *RST and *RCL will also set the calibration state to OFF.	CAL OFF

Calibration Error Messages

Errors that can occur during calibration are shown in the following table.

Table B-6. GPIB Calibration Error Messages

Error	Meaning
401	CAL switch prevents calibration (This is a hardware disable, see the Service Manual.)
402	CAL password is incorrect
403	CAL not enabled
404	Computed readback cal constants are incorrect
405	Computed programming cal constants are incorrect
406	Incorrect sequence of calibration commands

Changing the Calibration Password

The factory default password is 0. You can change the password when the dc source is in calibration mode (which requires you to enter the existing password). Proceed as follows:

	Action	Display
1.	Begin by pressing **Shift Cal** and scrolling to the CAL ON command.	CAL ON 0.0
2.	Enter the existing password from Entry keypad and press **Enter**	
3.	Press **Shift Cal** and scroll to the CAL PASS command.	CAL:PASS 0
4.	Enter the new password from the keypad. You can use any number with up to six digits and an optional decimal point. If you want the calibration function to operate without requiring any password, change the password to 0 (zero).	

NOTE: If you want the calibration function to operate without requiring any password, change the password to 0 (zero).

Artisan Technology Group - Quality Instrumentation ... Guaranteed | (888) 88-SOURCE | www.artisantg.com

Calibration Over the GPIB

You can calibrate the dc source by using SCPI commands within your controller programming statements. Be sure you are familiar with calibration from the front panel before you calibrate from a controller. Each front panel calibration command has a corresponding SCPI command. When you write your calibration program, perform the calibration procedure in the same order as the front panel procedure documented in this appendix.

The SCPI calibration commands are explained in chapter 3 of the dc source Programming Guide. Calibration error messages that can occur during GPIB calibration are shown in table B-3.

Artisan Technology Group - Quality Instrumentation ... Guaranteed | (888) 88-SOURCE | www.artisantg.com

Artisan Technology Group - Quality Instrumentation ... Guaranteed | (888) 88-SOURCE | www.artisantg.com

C

Error Messages

Error Number List

This appendix gives the error numbers and descriptions that are returned by the dc source. Error numbers are returned in two ways:

- Error numbers are displayed on the front panel
- Error numbers and messages are read back with the SYSTem:ERRor? query. SYSTem:ERRor? returns the error number into a variable and returns two parameters: an NR1 and a string.

The following table lists the errors that are associated with SCPI syntax errors and interface problems. It also lists the device dependent errors. Information inside the brackets is not part of the standard error message, but is included for clarification.

When errors occur, the Standard Event Status register records them in bit 2, 3, 4, or 5 as described in the following table:

Table C-1. Error Numbers

Error Number	Error String [Description/Explanation/Examples]
	Command Errors –100 through –199 (sets Standard Event Status Register bit #5)
–100	Command error [generic]
–101	Invalid character
–102	Syntax error [unrecognized command or data type]
–103	Invalid separator
–104	Data type error [e.g., "numeric or string expected, got block data"]
–105	GET not allowed
–108	Parameter not allowed [too many parameters]
–109	Missing parameter [too few parameters]
–112	Program mnemonic too long [maximum 12 characters]
–113	Undefined header [operation not allowed for this device]
–121	Invalid character in number [includes "9" in octal data, etc.]
–123	Numeric overflow [exponent too large; exponent magnitude >32 k]
–124	Too many digits [number too long; more than 255 digits received]
–128	Numeric data not allowed
–131	Invalid suffix [unrecognized units, or units not appropriate]

Artisan Technology Group - Quality Instrumentation ... Guaranteed | (888) 88-SOURCE | www.artisantg.com

–138	Suffix not allowed
–141	Invalid character data [bad character, or unrecognized]
–144	Character data too long
–148	Character data not allowed
–150	String data error
–151	Invalid string data [e.g., END received before close quote]
–158	String data not allowed
–160	Block data error
–161	Invalid block data [e.g., END received before length satisfied]
–168	Block data not allowed
–170	Expression error
–171	Invalid expression
–178	Expression data not allowed
	Execution Errors –200 through –299 (sets Standard Event Status Register bit #4)
–200	Execution error [generic]
–222	Data out of range [e.g., too large for this device]
–223	Too much data [out of memory; block, string, or expression too long]
–224	Illegal parameter value [device-specific]
–225	Out of memory
–270	Macro error
–272	Macro execution error
–273	Illegal macro label
–276	Macro recursion error
–277	Macro redefinition not allowed
	System Errors –300 through –399 (sets Standard Event Status Register bit #3)
–310	System error [generic]
–350	Too many errors [errors beyond 9 lost due to queue overflow]
	Query Errors –400 through –499 (sets Standard Event Status Register bit #2)
–400	Query error [generic]
–410	Query INTERRUPTED [query followed by DAB or GET before response complete]
–420	Query UNTERMINATED [addressed to talk, incomplete programming message received]
–430	Query DEADLOCKED [too many queries in command string]
–440	Query UNTERMINATED [after indefinite response]

Artisan Technology Group - Quality Instrumentation ... Guaranteed | (888) 88-SOURCE | www.artisantg.com

	Selftest Errors 0 through 99 (sets Standard Event Status Register bit #3)
0	No error
1	Non-volatile RAM RD0 section checksum failed
2	Non-volatile RAM CONFIG section checksum failed
3	Non-volatile RAM CAL section checksum failed
4	Non-volatile RAM STATE section checksum failed
5	Non-volatile RST section checksum failed
10	RAM selftest
11	VDAC/IDAC selftest 1
12	VDAC/IDAC selftest 2
13	VDAC/IDAC selftest 3
14	VDAC/IDAC selftest 4
15	OVDAC selftest
80	Digital I/O selftest error
	Device-Dependent Errors 100 through 32767 (sets Standard Event Status Register bit #3)
213	Ingrd receiver buffer overrun
216	RS-232 receiver framing error
217	RS-232 receiver parity error
218	RS-232 receiver overrun error
220	Front panel uart overrun
221	Front panel uart framing
222	Front panel uart parity
223	Front panel buffer overrun
224	Front panel timeout
401	CAL switch prevents calibration
402	CAL password is incorrect
403	CAL not enabled
404	Computed readback cal constants are incorrect
405	Computed programming cal constants are incorrect
406	Incorrect sequence of calibration commands
407	CV or CC status is incorrect for this command
408	Output mode switch must be in NORMAL position
601	Too many sweep points
602	Command only applies to RS-232 interface
603	CURRent or VOLTage fetch incompatible with last acquisition
604	Measurement overrange

Artisan Technology Group - Quality Instrumentation ... Guaranteed | (888) 88-SOURCE | www.artisantg.com

Artisan Technology Group - Quality Instrumentation ... Guaranteed | (888) 88-SOURCE | www.artisantg.com

D

Line Voltage Conversion

WARNING: ***Shock Hazard*** **Operating personnel must not remove instrument covers. Component replacement and internal adjustments must be made only by qualified service personnel.**

Open the Unit

- Turn off ac power and disconnect the power cord from the unit.
- Loosen the two screws on the rear bezel and remove the bezel (use a #15 Torx drive).
- Remove the two screws on the bottom of the unit (use a #15 Torx drive).
- Pull the cover back to remove it from the unit.

Configure the Power Transformer

- Locate the ac input wiring harness on the left side of the transformer
- Use a needlenose pliers and connect the ac input wiring harness according to the information in the following figure:

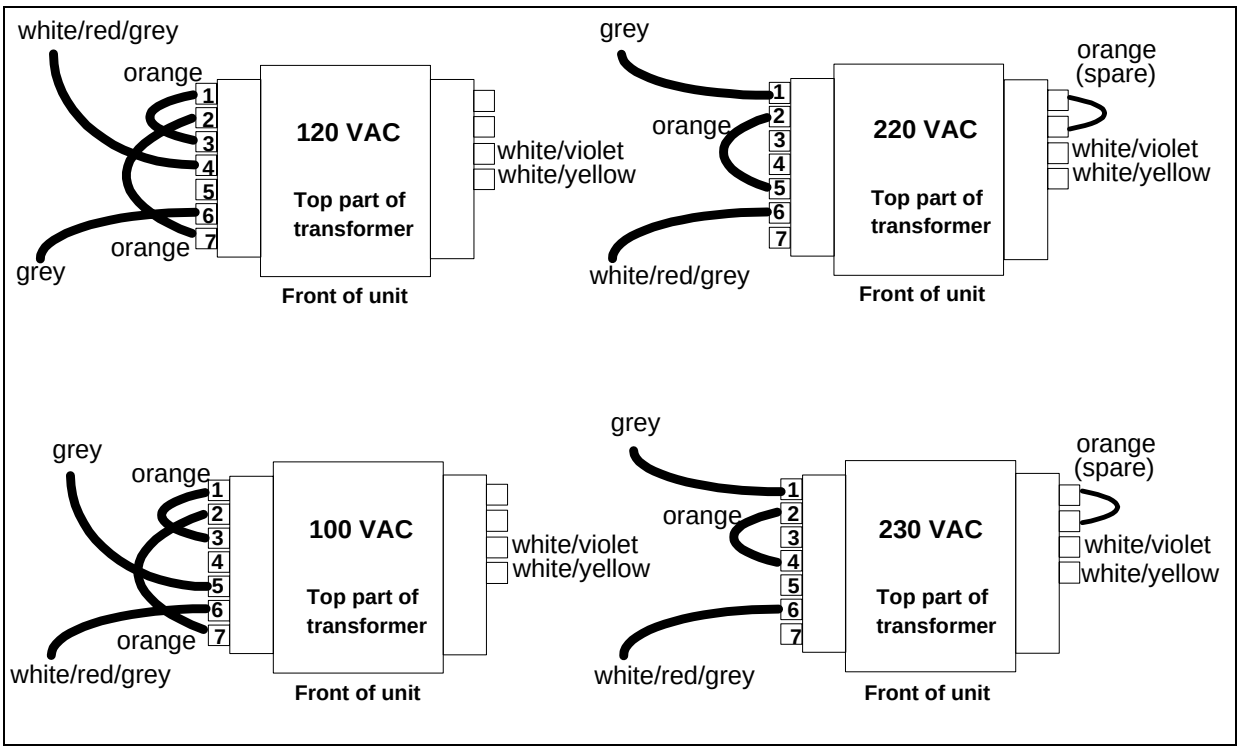

Figure D-1, Power Transformer AC Input Connections

Artisan Technology Group - Quality Instrumentation ... Guaranteed | (888) 88-SOURCE | www.artisantg.com

Install the Correct Line Fuse

- Unscrew the line fuse cap from the rear panel and install the correct fuse.
  For 100/120 Vac operation: T2.5A (time delay); part number 2110-0633
  For 220/230 Vac operation: T1.25A (time delay); part number 2110-0788
- Mark the voltage setting that the unit has been set to on the rear panel label.

Close the Unit

- Replace the outer cover.
- Reconnect the power cord and turn on the unit.

List of Fuses

F301	2110-0633	1	Fuse, T2.5A, 250V (for 100/120 Vac input)
F301	2110-0788	1	Fuse, T1.25A, 250V (for 220/230 Vac input)
F303	2110-0699	1	Fuse, sub-min, M5A, 125V
F305	2110-0699	1	Fuse, sub-min, M5A, 125V
F306	2110-0699	1	Fuse, sub-min, M5A, 125V
F308	2110-0932	1	Fuse, smt, M5A, 125V
F309	2110-0685	1	Fuse, sub-min, T7A 125V (6611C)
F309	2110-0967	1	Fuse, sub-min, T4A 125V (6612C, 66312A)
F309	2110-0967	1	Fuse, sub-min, T4A 125V (6613C)
F309	2110-0967	1	Fuse, sub-min, T4A 125V (6614C)
F310	2110-0932	1	Fuse, smt, M5A, 125V
F311	2110-1138	1	Fuse, smt, M15A 125V (6611C)
F311	2110-1013	1	Fuse, smt, M12A, 125V (6612C, 66312A)
F311	2110-0915	1	Fuse, smt, M7A 125V (6613C)
F311	2110-0932	1	Fuse, smt, M5A 125V (6614C)

Artisan Technology Group - Quality Instrumentation ... Guaranteed | (888) 88-SOURCE | www.artisantg.com

Index

— —

-- -- -- -- -- --, 43

—+—

+/- terminals, 23
+S/-S terminals, 23

—0—

0 ... 9, 41

—A—

ac line conversion, 69
accessories, 18
ACDC current detector, 44
airflow, 22
annunciators
  Addr, 36
  Cal, 36
  CC, 36
  CV, 36
  Dis, 36
  Err, 36
  OCP, 36
  Prot, 36
  Rmt, 36
  Shift, 36
  SRQ, 36
  Unr, 36
AWG ratings, 23

—C—

cables, 18
calibration, 59
  current programming - high range, 61
  current programming - low range, 61
  enable, 60
  equipment, 53
  error messages, 62
  menu, 59
  OVP, 60
  password, 62
  peak current, 61
  saving, 62
  setup, 53
  voltage measurement, 60
  voltage programming, 60
capacitor discharge limit, 26
CC mode, 42
checkout procedure, 32
cleaning, 21
clear protection, 43
controller connections, 28
controls and indicators, 19
conversion, ac line, 69
crowbar circuit, 26
current measurement range, 43
CV mode, 20, 42

—D—

damage, 21
DC current detector, 44
DFI signal, 26
DIGIO, 45
digital connector, 21, 26
digital I/O, 26
digital output port, 45
dimensions, 22
disabling multiple units, 27

—E—

enable output, 42
enter value, 42
entry keys, 41
  ←, 41
  0 ... 9, 41
  Backspace, 41
  Clear Entry, 41
  Enter Number, 41
error messages, 34
error numbers, 65

—F—

features, 19
FLT, 45
FLT output, 26
front panel, 19, 35
  annuncuiators, 36
  connections, 23
  controls and indicators, 35
  keys, 36
FS, 38, 43
FS status, 26
function keys, 38
  ▲, 38
  Cal, 40
  Current, 40
  immediate action, 38
  Input, 39
  Meter, 39

Artisan Technology Group - Quality Instrumentation ... Guaranteed | (888) 88-SOURCE | www.artisantg.com

OCP, 38
Output, 40
Output On/Off, 38
OV, 40
Prot Clear, 38
Protect, 40
Voltage, 40
fuses, 23

—G—

ground, earth, 18
guide, programming, 17
guide, user's, 17

—H—

history, 6
GPIB, 46
address, 46
connections, 28
interface, 28

—I—

INH, 45
INH input, 26
input
connections, 23
power, 18
inspection, 21

—L—

line fuse
replacing, 34
line voltage conversion, 69
load line, 20
load voltage drops, 24
location, 22

—M—

making measurements, 43
manuals, 21
measurement ranges, 43
multiple loads, 24

—N—

non-volatile memory
clearing, 47
storing, 37, 40

—O—

OC, 43
operating features, 19
option 760, 46
options, 18
OT, 43
output
characteristic, 20
connections, 23
connector, 21
control keys, 40
current setting, 42
enable, 42
rating, 20
voltage setting, 42
output relay, 46
OV, 43
OVLD, 34, 43
OVP
capacitor discharge limit, 26
circuit, 26

—P—

power cord, 21, 23
power receptacle, 18
preliminary checkout, 31
print date, 6
protection
FS, 43
OC, 43
OT, 43
OV, 43
RI, 43

—Q—

query protection, 43

—R—

rack mount kit, 18
rack mounting, 22
rear panel
connections, 26, 28, 29
recalling operating states, 47
remote programming, 19
remote sensing, 25
stability, 26
repacking, 21
RI, 43
signal, 26
RIDFI, 45
RS-232, 46
connections, 29
interface, 29

—S—

safety class, 18
safety warning, 18
saving operating states, 47

Artisan Technology Group - Quality Instrumentation ... Guaranteed | (888) 88-SOURCE | www.artisantg.com

selftest errors, 34
sense connections, 25
service guide, 18
setting voltage/current, 42
shift annunciator, 31
shift key, 31
shorting switch, 27
specifications, 49
stability with remote sensing, 26
supplemental characteristics, 50
system errors, 65
system keys, 37
    Address, 37
    Error, 37
    Interface, 37
    Local, 37
    RCL, 37
    Save, 37
    Shift, 37

—T—

turn-on checkout, 31, 55

—V—

verification
    current measurement accuracy, 55
    current programming, 55
    equipment, 53
    setup, 53
    test record, 57
    voltage measurement accuracy, 55
    voltage programming, 55
verification tests, 31

—W—

warranty, 2
wire
    current ratings, 23
wiring considerations, 23

Artisan Technology Group - Quality Instrumentation ... Guaranteed | (888) 88-SOURCE | www.artisantg.com

Agilent Sales and Support Office

For more information about Agilent Technologies test and measurement products, applications, services, and for a current sales office listing, visit our web site: http://www.agilent.com/find/tmdir

You can also contact one of the following centers and ask for a test and measurement sales representative.

United States:
Agilent Technologies
Test and Measurement Call Center
P.O. Box 4026
Englewood, CO 80155-4026
(tel) 1 800 452 4844

Canada:
Agilent Technologies Canada Inc.
5150 Spectrum Way
Mississauga, Ontario
L4W 5G1
(tel) 1 877 894 4414

Europe:
Agilent Technologies
Test & Measurement European Marketing Organisation
P.O. Box 999
1180 AZ Amstelveen
The Netherlands
(tel) (31 20) 547 9999

Japan:
Agilent Technologies Japan Ltd.
Measurement Assistance Center
9-1, Takakura-Cho, Hachioji-Shi,
Tokyo 192-8510, Japan
(tel) (81) 426 56 7832
(fax) (81) 426 56 7840

Latin America:
Agilent Technologies
Latin American Region Headquarters
5200 Blue Lagoon Drive, Suite #950
Miami, Florida 33126
U.S.A.
(tel) (305) 267 4245
(fax) (305) 267 4286

Australia/New Zealand:
Agilent Technologies Australia Pty Ltd
347 Burwood Highway
Forest Hill, Victoria 3131
(tel) 1-800 629 485 (Australia)
(fax) (61 3) 9272 0749
(tel) 0 800 738 378 (New Zealand)
(fax) (64 4) 802 6881

Asia Pacific:
Agilent Technologies
24/F, Cityplaza One, 1111 King's Road,
Taikoo Shing, Hong Kong
tel: (852)-3197-7777
fax: (852)-2506-9284

Technical data is subject to change.

Artisan Technology Group - Quality Instrumentation ... Guaranteed | (888) 88-SOURCE | www.artisantg.com

Manual Updates

The following updates have been made to this manual since the November 1997 printing indicated on the Printing History page.

7/8/99

The Isink rating referred to on page 20 has been corrected. Additional information about CV mode operation has also been added to this page.

Notes have been added to Table A-1 for the Ripple and Noise specifications as well as the DC Measurement Accuracy Voltage specification.

A note has been added to table A-2 for the OVP Accuracy characteristic, and the Isolation to Ground characteristic has been corrected.

Steps 19 and 20 on page 61 under Low Range Current Measurement Calibration have been switched.

1/7/00

All references to HP have been changed to Agilent.

All references to HP-IB have been changed to GPIB.

A note about magnetic fields has been added to page 22.

On page 49 the model reference for note 3 has been corrected.

2/21/01

Fuse part numbers on page 21 and 68 have been corrected.

A note has been added to Table A-1 for the Programming Accuracy specification.

4/11/03

The Canada ICES/NMB-001 statement has been added to page 3.

A correction has been made to the Programming Accuracy note in table A-1.

10/2/03

The Ripple and Noise specification for Model 6614C has changed in table A-1.

3/9/04

The ac input ratings and fuse information has been updated as per IEC 61010-1 requirements throughout the manual.

The Declaration of Conformity has been updated on page 5.

5/11/09

A URL has been added to the declarations pages to obtain the latest declaration of conformity.

Corrections have been made to Figure 3-5.

The RF field annotation note has been removed from Table A-1.

Artisan Technology Group - Quality Instrumentation ... Guaranteed | (888) 88-SOURCE | www.artisantg.com

Artisan Technology Group

Artisan Technology Group is your source for quality new and certified-used/pre-owned equipment

- FAST SHIPPING AND DELIVERY
- TENS OF THOUSANDS OF IN-STOCK ITEMS
- EQUIPMENT DEMOS
- HUNDREDS OF MANUFACTURERS SUPPORTED
- LEASING/MONTHLY RENTALS
- ITAR CERTIFIED SECURE ASSET SOLUTIONS

SERVICE CENTER REPAIRS
Experienced engineers and technicians on staff at our full-service, in-house repair center

InstraView℠ REMOTE INSPECTION
Remotely inspect equipment before purchasing with our interactive website at ***www.instraview.com*** ↗

WE BUY USED EQUIPMENT
Sell your excess, underutilized, and idle used equipment
We also offer credit for buy-backs and trade-ins
www.artisantg.com/WeBuyEquipment ↗

LOOKING FOR MORE INFORMATION?
Visit us on the web at ***www.artisantg.com*** ↗ for more information on price quotations, drivers, technical specifications, manuals, and documentation

Contact us: (888) 88-SOURCE | sales@artisantg.com | www.artisantg.com