Artisan Technology Group

Artisan Technology Group is your source for quality new and certified-used/pre-owned equipment

- FAST SHIPPING AND DELIVERY
- TENS OF THOUSANDS OF IN-STOCK ITEMS
- EQUIPMENT DEMOS
- HUNDREDS OF MANUFACTURERS SUPPORTED
- LEASING/MONTHLY RENTALS
- ITAR CERTIFIED SECURE ASSET SOLUTIONS

SERVICE CENTER REPAIRS
Experienced engineers and technicians on staff at our full-service, in-house repair center

InstraView℠ REMOTE INSPECTION
Remotely inspect equipment before purchasing with our interactive website at ***www.instraview.com*** ↗

WE BUY USED EQUIPMENT
Sell your excess, underutilized, and idle used equipment
We also offer credit for buy-backs and trade-ins
www.artisantg.com/WeBuyEquipment ↗

LOOKING FOR MORE INFORMATION?
Visit us on the web at ***www.artisantg.com*** ↗ for more information on price quotations, drivers, technical specifications, manuals, and documentation

Contact us: (888) 88-SOURCE | sales@artisantg.com | www.artisantg.com

Agilent E1344A

16-Channel T/C High-Voltage Relay Multiplexer

Data Sheet

- **1-Slot, B-size, register based**
- **High-voltage measurements up to 250 V**
- **Built-in thermistor reference junction**
- **Channel scanning with Agilent DMMs**
- **16-channel 3-wire or 8-channel 4-wire multiplexer**
- **Thermocouple compensated reed relay multiplexer**

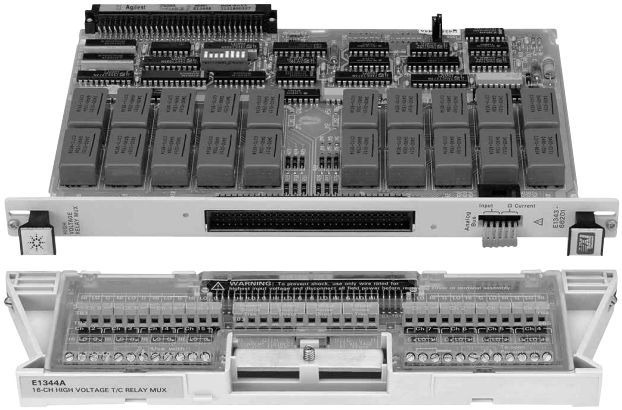

Agilent E1344A

Description

The Agilent E1344A Thermocouple Compensated High-Voltage Reed Relay Multiplexer is a **B-size, 1-slot, register-based VXI module** that switches 16 channels of high, low, and guard each. The multiplexer module consists of a B-size component card (labeled E1343-66201) and a screw terminal block that plugs onto the component card. The E1344A is functionally similar to the E1343A.

Using the Agilent E1326B or E1411B DMMs, the E1344A performs channel scanning with automatic conversions for many thermocouple types. Temperature measurements are made with automatic cold junction compensation. SCPI commands are also used to set up measurements. The card, in conjunction with Agilent VXI DMMs, also measures voltage, current, and two- and four-wire resistance.

Refer to the Agilent Technologies Website for instrument driver availability and downloading instructions, as well as for recent product updates, if applicable.

Configuration

One analog bus cable is shipped with each module, making it easy to connect multiplexer common outputs together for slot-adjacent modules. If you are using a B–size mainframe, Agilent E1300B or E1301B, use the analog bus cable shipped with the E1326B DMM to connect it to the multiplexer(s).

C-size Adapter

For installing the E1344A in a C-size mainframe, the E1403C active adapter is recommended.

Agilent Technologies

Artisan Technology Group - Quality Instrumentation ... Guaranteed | (888) 88-SOURCE | www.artisantg.com

Product Specifications

Input

DC:	
Maximum voltage (any terminal to any other terminal or chassis):	250 Vdc
AC rms:	
Maximum voltage (any terminal to any other terminal or chassis):	250 V rms
Maximum current (per channel common, non-inductive):	50 mA
Maximum power per channel:	1 VA

DC

Maximum thermal offset per channel, differential Hi-Lo:	10 µV
Closed channel resistance:	100 Ω ± 10%
Insulation resistance (between any two points):	10E9 Ω
Insulation resistance (Hi to Lo, power off):	n/a

AC

Minimum bandwidth (–3 dB, 50 Ω source/load):	10 MHz (protection resistors shorted)
Crosstalk (channel-to-channel):	
100 kHz:	–80 dB
10 MHz:	–40 dB
Both:	n/a
Closed channel capacitance:	<150 pF Hi-Lo, <150 pF Lo-Guard, <2000 pF Guard-Chassis

General Characteristics

Relays:	Reed relays Break-before-make
Power down state:	Relays open on power down
Power up state:	Relays open on power up
Minimum relay life:	
No load:	10E8 operations
Rated load:	10E7 operations
Screw terminal wire size:	16 to 26 AWG (1.5, 1.2, 0.9, 0.75, 0.5 mm)
Scanning rate:	350 channels/s typ.

General Specifications

VXI Characteristics

VXI device type:	Register based, A16, slave only
Size:	B
Slots:	1
Connectors:	P1
Shared memory:	None
VXI busses:	None
C-size compatibility:	Requires E1403C

Instrument Drivers

See the Agilent Technologies Website (http://www.agilent.com/find/inst_drivers) for driver availability and downloading.

Command module firmware:	Downloadable
Command module firmware rev:	A.06
I-SCPI Win 3.1:	Yes
I-SCPI Series 700:	Yes
C-SCPI LynxOS:	Yes
C-SCPI Series 700:	Yes
Panel Drivers:	Yes
VXI*plug&play* Win Framework:	Yes
VXI*plug&play* Win 95/NT Framework:	Yes
VXI*plug&play* HP-UX Framework:	No

Module Current

	I_{PM}	I_{DM}
+5 V:	0.2	0.01
+12 V:	0.13	0.01
–12 V:	0	0
+24 V:	0	0
–24 V:	0	0
–5.2 V	0	0
–2 V:	0	0

Cooling/Slot

Watts/slot:	1.00
ΔP mm H_2O:	0.02
Air Flow liter/s:	0.10

Ordering Information

Description	Product No.
16-Ch. T/C High-Voltage Relay Multiplexer	E1344A
Service Manual	E1344A 0B3
E1344A Screw Terminal Module	E1344-80001

Artisan Technology Group - Quality Instrumentation ... Guaranteed | (888) 88-SOURCE | www.artisantg.com

E1344A Circuit Diagram

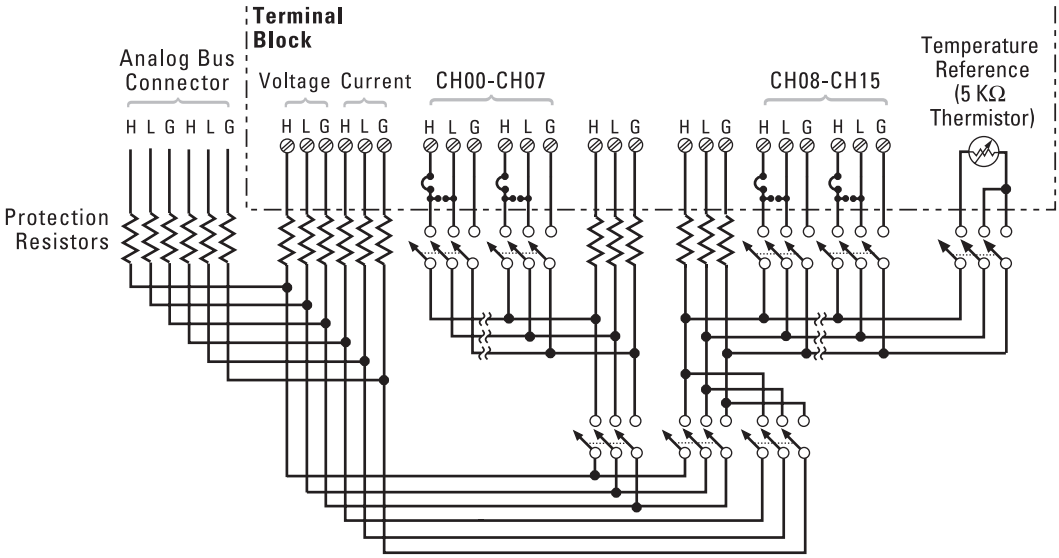

Signal Conditioning Components/Current Shunt

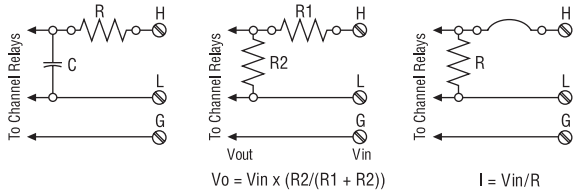

Low Pass Filter Configuration **Attenuator Configuration** **Current Sensing Configuration**

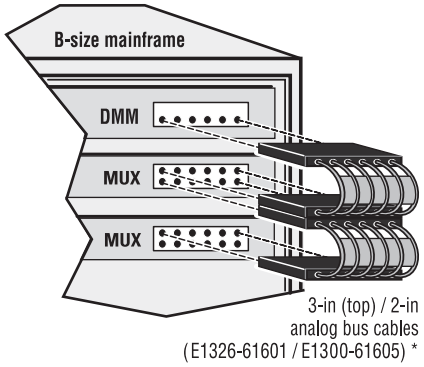

Analog bus cables for MUX-to-MUX and MUX-to-multimeter connections

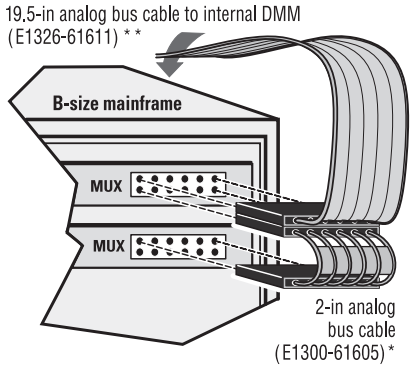

* DMM-to-MUX and MUX-to-MUX analog bus cables are provided with the purchase of the DMM and MUX modules respectively.

** 19.5-in analog bus cable is provided with purchase of E1300/01B Series B mainframe with internal DMM option.

Analog bus cables for MUX-to-MUX and MUX-to-multimeter connections

Artisan Technology Group - Quality Instrumentation ... Guaranteed | (888) 88-SOURCE | www.artisantg.com

Related Literature

2000 Test System and VXI Catalog CD-ROM,
Agilent Pub. No. 5980-0308E (detailed specifications for VXI products)

2000 Test System and VXI Catalog,
Agilent Pub. No. 5980-0307E (overview of VXI products)

1998 Test System and VXI Products Data Book,
Agilent Pub. No. 5966-2812E

Online

Internet access for Agilent product information, services and support
www.agilent.com/find/tmdir

VXI product information
www.agilent.com/find/vxi

Defense Electronics Applications
www.agilent.com/find/defense_ATE

Agilent Technologies VXI Channel Partners
www.agilent.com/find/vxichanpart

Agilent Technologies' HP VEE Application Website
www.agilent.com/find/vee

Agilent Technologies Data Acquisition and Control Website
www.agilent.com/find/data_acq

Agilent Technologies Instrument Driver Downloads
www.agilent.com/find/inst_drivers

Agilent Technologies Electronics Manufacturing Test Solutions
www.agilent.com/go/manufacturing

Get assistance with all your test and measurement needs at
www.agilent.com/find/assist
or check your local phone book for the Agilent office near you.

Agilent Technologies' test and measurement service/support commitment

Agilent strives to maximize the value our test and measurement products give you, while minimizing your risk and service/support problems. We work to ensure that each product is realistically described in the literature, meets its stated performance and functionality, has a clearly stated global warranty, and is supported at least five years beyond its production life. Our extensive self-help tools include many online resources (www.agilent.com).

Experienced Agilent test engineers throughout the world offer practical recommendations for product evaluation and selection. After you purchase an Agilent product, they can provide no-charge assistance with operation verification and basic measurement setups for advertised capabilities. To enhance the features, performance, and flexibility of your test and measurement products—and to help you solve application challenges—Agilent offers free or extra-cost product options and upgrades, and sell expert engineering, calibration, and other consulting services.

Phone or Fax

United States:
(tel) 1 800 829 4444

Canada:
(tel) 1 877 894 4414
(fax) (905) 282 6495

China:
(tel) 800 810 0189
(fax) 800 820 2816

Europe:
(tel) (31 20) 547 2323
(fax) (31 20) 547 2390

Japan:
(tel) (81) 426 56 7832
(fax) (81) 426 56 7840

Korea:
(tel) (82 2) 2004 5004
(fax) (82 2) 2004 5115

Latin America:
(tel) (305) 269 7500
(fax) (305) 269 7599

Taiwan:
(tel) 0800 047 866
(fax) 0800 286 331

Other Asia Pacific Countries:
(tel) (65) 6375 8100
(fax) (65) 6836 0252
(e-mail) tm_asia@agilent.com

Data Subject to Change

© Agilent Technologies, Inc. 2000

Printed in the U.S.A. May 1, 2004
5965-5600E

Agilent Technologies

Artisan Technology Group - Quality Instrumentation ... Guaranteed | (888) 88-SOURCE | www.artisantg.com

Artisan Technology Group

Artisan Technology Group is your source for quality new and certified-used/pre-owned equipment

- FAST SHIPPING AND DELIVERY
- TENS OF THOUSANDS OF IN-STOCK ITEMS
- EQUIPMENT DEMOS
- HUNDREDS OF MANUFACTURERS SUPPORTED
- LEASING/MONTHLY RENTALS
- ITAR CERTIFIED SECURE ASSET SOLUTIONS

SERVICE CENTER REPAIRS
Experienced engineers and technicians on staff at our full-service, in-house repair center

InstraView℠ REMOTE INSPECTION
Remotely inspect equipment before purchasing with our interactive website at ***www.instraview.com*** ↗

WE BUY USED EQUIPMENT
Sell your excess, underutilized, and idle used equipment
We also offer credit for buy-backs and trade-ins
www.artisantg.com/WeBuyEquipment ↗

LOOKING FOR MORE INFORMATION?
Visit us on the web at ***www.artisantg.com*** ↗ for more information on price quotations, drivers, technical specifications, manuals, and documentation

Contact us: (888) 88-SOURCE | sales@artisantg.com | www.artisantg.com