Artisan Technology Group

Artisan Technology Group is your source for quality new and certified-used/pre-owned equipment

- FAST SHIPPING AND DELIVERY
- TENS OF THOUSANDS OF IN-STOCK ITEMS
- EQUIPMENT DEMOS
- HUNDREDS OF MANUFACTURERS SUPPORTED
- LEASING/MONTHLY RENTALS
- ITAR CERTIFIED SECURE ASSET SOLUTIONS

SERVICE CENTER REPAIRS
Experienced engineers and technicians on staff at our full-service, in-house repair center

InstraView℠ REMOTE INSPECTION
Remotely inspect equipment before purchasing with our interactive website at ***www.instraview.com*** ↗

WE BUY USED EQUIPMENT
Sell your excess, underutilized, and idle used equipment
We also offer credit for buy-backs and trade-ins
www.artisantg.com/WeBuyEquipment ↗

LOOKING FOR MORE INFORMATION?
Visit us on the web at ***www.artisantg.com*** ↗ for more information on price quotations, drivers, technical specifications, manuals, and documentation

Contact us: (888) 88-SOURCE | sales@artisantg.com | www.artisantg.com

Agilent Technologies E8480A High Power General Purpose Switch Module Service Manual

Agilent Technologies

Manual Part Number: E8480-90010
Printed in Malaysia E0912

Artisan Technology Group - Quality Instrumentation ... Guaranteed | (888) 88-SOURCE | www.artisantg.com

Artisan Technology Group - Quality Instrumentation ... Guaranteed | (888) 88-SOURCE | www.artisantg.com

Contents

Agilent E8480A Service Manual

Front Matter
AGILENT TECHNOLOGIES WARRANTY STATEMENT 5
U.S. Government Restricted Rights 5
Documentation History 6
Safety Symbols 6
WARNINGS 6
Declaration of Conformity 7

Chapter 1
General Information 9
Introduction 9
Contacting Agilent Technologies 10
Safety Considerations 11
Inspection/Shipping 13
Initial Inspection 13
Shipping Guidelines 14
Agilent E8480A Switch Module Description 15
Switch Module Block Diagram 15
Switch Module Specifications 15
Switch Module Serial Numbers 15
Switch Module Options 17

Chapter 2
Verification Tests 19
Introduction 19
General Test Requirements 19
Recommended Test Equipment 19
Test Conditions/ Procedures 20
Performance Test Record 20
Recommended System Configuration 20
Functional Verification Test 21
Test Procedure 21
Corrective Action 21
Wiring the Test Fixture for Performance Tests 22
Performance Test: Closed-Channel Resistance Test 24
Test Procedure 24
Corrective Action 26
Performance Test: DC Isolation Test 26
Test Procedure 26
Corrective Action 27
Performance Test Record 31

Artisan Technology Group - Quality Instrumentation ... Guaranteed | (888) 88-SOURCE | www.artisantg.com

Chapter 3
Service 35
Introduction 35
Repair Strategy 35
Replaceable Parts 36
Repair/Maintenance Guidelines 37
ESD Precautions 37
Cleaning Requirements 37
Troubleshooting 38
Identifying the Problem 38
Testing the Assembly 39
Module Disassembly 40

Appendix A
E8480A Specifications 41

Appendix B
Relay Life 43
Replacement Strategy 43
Relay Life Factors 43
End-of-Life Determination 43

Artisan Technology Group - Quality Instrumentation ... Guaranteed | (888) 88-SOURCE | www.artisantg.com

AGILENT TECHNOLOGIES WARRANTY STATEMENT

AGILENT PRODUCT: E8480A High Power General Purpose Switch Module **DURATION OF WARRANTY:** 3 years

1. Agilent Technologies warrants Agilent hardware, accessories and supplies against defects in materials and workmanship for the period specified above. If Agilent receives notice of such defects during the warranty period, Agilent will, at its option, either repair or replace products which prove to be defective. Replacement products may be either new or like-new.

2. Agilent warrants that Agilent software will not fail to execute its programming instructions, for the period specified above, due to defects in material and workmanship when properly installed and used. If Agilent receives notice of such defects during the warranty period, Agilent will replace software media which does not execute its programming instructions due to such defects.

3. Agilent does not warrant that the operation of Agilent products will be interrupted or error free. If Agilent is unable, within a reasonable time, to repair or replace any product to a condition as warranted, customer will be entitled to a refund of the purchase price upon prompt return of the product.

4. Agilent products may contain remanufactured parts equivalent to new in performance or may have been subject to incidental use.

5. The warranty period begins on the date of delivery or on the date of installation if installed by Agilent. If customer schedules or delays Agilent installation more than 30 days after delivery, warranty begins on the 31st day from delivery.

6. Warranty does not apply to defects resulting from (a) improper or inadequate maintenance or calibration, (b) software, interfacing, parts or supplies not supplied by Agilent, (c) unauthorized modification or misuse, (d) operation outside of the published environmental specifications for the product, or (e) improper site preparation or maintenance.

7. TO THE EXTENT ALLOWED BY LOCAL LAW, THE ABOVE WARRANTIES ARE EXCLUSIVE AND NO OTHER WARRANTY OR CONDITION, WHETHER WRITTEN OR ORAL, IS EXPRESSED OR IMPLIED AND AGILENT SPECIFICALLY DISCLAIMS ANY IMPLIED WARRANTY OR CONDITIONS OF MERCHANTABILITY, SATISFACTORY QUALITY, AND FITNESS FOR A PARTICULAR PURPOSE.

8. Agilent will be liable for damage to tangible property per incident up to the greater of $300,000 or the actual amount paid for the product that is the subject of the claim, and for damages for bodily injury or death, to the extent that all such damages are determined by a court of competent jurisdiction to have been directly caused by a defective Agilent product.

9. TO THE EXTENT ALLOWED BY LOCAL LAW, THE REMEDIES IN THIS WARRANTY STATEMENT ARE CUSTOMER'S SOLE AND EXLUSIVE REMEDIES. EXCEPT AS INDICATED ABOVE, IN NO EVENT WILL AGILENT OR ITS SUPPLIERS BE LIABLE FOR LOSS OF DATA OR FOR DIRECT, SPECIAL, INCIDENTAL, CONSEQUENTIAL (INCLUDING LOST PROFIT OR DATA), OR OTHER DAMAGE, WHETHER BASED IN CONTRACT, TORT, OR OTHERWISE.

FOR CONSUMER TRANSACTIONS IN AUSTRALIA AND NEW ZEALAND: THE WARRANTY TERMS CONTAINED IN THIS STATEMENT, EXCEPT TO THE EXTENT LAWFULLY PERMITTED, DO NOT EXCLUDE, RESTRICT OR MODIFY AND ARE IN ADDITION TO THE MANDATORY STATUTORY RIGHTS APPLICABLE TO THE SALE OF THIS PRODUCT TO YOU.

U.S. Government Restricted Rights

The Software and Documentation have been developed entirely at private expense. They are delivered and licensed as "commercial computer software" as defined in DFARS 252.227- 7013 (Oct 1988), DFARS 252.211-7015 (May 1991) or DFARS 252.227-7014 (Jun 1995), as a "commercial item" as defined in FAR 2.101(a), or as "Restricted computer software" as defined in FAR 52.227-19 (Jun 1987)(or any equivalent agency regulation or contract clause), whichever is applicable. You have only those rights provided for such Software and Documentation by the applicable FAR or DFARS clause or the Agilent standard software agreement for the product involved.

Agilent Technologies

E8480A High Power General Purpose Switch Module Service Manual
Edition 1
Copyright © 2001 Agilent Technologies, Inc. All rights reserved.

Artisan Technology Group - Quality Instrumentation ... Guaranteed | (888) 88-SOURCE | www.artisantg.com

Documentation History

All Editions and Updates of this manual and their creation date are listed below. The first Edition of the manual is Edition 1. The Edition number increments by 1 whenever the manual is revised. Updates, which are issued between Editions, contain replacement pages to correct or add additional information to the current Edition of the manual. Whenever a new Edition is created, it will contain all of the Update information for the previous Edition. Each new Edition or Update also includes a revised copy of this documentation history page.

Edition 1 . . . . . June, 2001

Edition 1, Rev. 1 . . . . . September, 2012

Safety Symbols

Instruction manual symbol affixed to product. Indicates that the user must refer to the manual for specific WARNING or CAUTION information to avoid personal injury or damage to the product.

Indicates the field wiring terminal that must be connected to earth ground before operating the equipment — protects against electrical shock in case of fault.

or

Frame or chassis ground terminal—typically connects to the equipment's metal frame.

Alternating current (AC)

Direct current (DC).

Warning. Risk of electrical shock.

WARNING Calls attention to a procedure, practice, or condition that could cause bodily injury or death.

CAUTION Calls attention to a procedure, practice, or condition that could possibly cause damage to equipment or permanent loss of data.

WARNINGS

The following general safety precautions must be observed during all phases of operation, service, and repair of this product. Failure to comply with these precautions or with specific warnings elsewhere in this manual violates safety standards of design, manufacture, and intended use of the product. Agilent Technologies assumes no liability for the customer's failure to comply with these requirements.

Ground the equipment: For Safety Class 1 equipment (equipment having a protective earth terminal), an uninterruptible safety earth ground must be provided from the mains power source to the product input wiring terminals or supplied power cable.

DO NOT operate the product in an explosive atmosphere or in the presence of flammable gases or fumes.

For continued protection against fire, replace the line fuse(s) only with fuse(s) of the same voltage and current rating and type. DO NOT use repaired fuses or short-circuited fuse holders.

Keep away from live circuits: Operating personnel must not remove equipment covers or shields. Procedures involving the removal of covers or shields are for use by service-trained personnel only. Under certain conditions, dangerous voltages may exist even with the equipment switched off. To avoid dangerous electrical shock, DO NOT perform procedures involving cover or shield removal unless you are qualified to do so.

DO NOT operate damaged equipment: Whenever it is possible that the safety protection features built into this product have been impaired, either through physical damage, excessive moisture, or any other reason, REMOVE POWER and do not use the product until safe operation can be verified by service-trained personnel. If necessary, return the product to Agilent for service and repair to ensure that safety features are maintained.

DO NOT service or adjust alone: Do not attempt internal service or adjustment unless another person, capable of rendering first aid and resuscitation, is present.

DO NOT substitute parts or modify equipment: Because of the danger of introducing additional hazards, do not install substitute parts or perform any unauthorized modification to the product. Return the product to Agilent for service and repair to ensure that safety features are maintained.

Artisan Technology Group - Quality Instrumentation ... Guaranteed | (888) 88-SOURCE | www.artisantg.com

Declaration of Conformity

Declarations of Conformity for this product and for other Agilent products may be downloaded from the Internet. There are two methods to obtain the Declaration of Conformity:

- Go to http://regulations.corporate.agilent.com/DoC/search.htm. You can then search by product number to find the latest Declaration of Conformity.
- Alternately, you can go to the product web page (www.agilent.com/find/E8480A), click on the Document Library tab then scroll down until you find the Declaration of Conformity link.

Artisan Technology Group - Quality Instrumentation ... Guaranteed | (888) 88-SOURCE | www.artisantg.com

Notes:

Artisan Technology Group - Quality Instrumentation ... Guaranteed | (888) 88-SOURCE | www.artisantg.com

Chapter 1
General Information

Introduction

This manual contains information required to test, troubleshoot, and repair the Agilent E8480A High Power General Purpose Switch module (see Figure 1-1). For more information on the switch module operation, see *Agilent E8480A High Power General Purpose Switch Module User's Manual*.

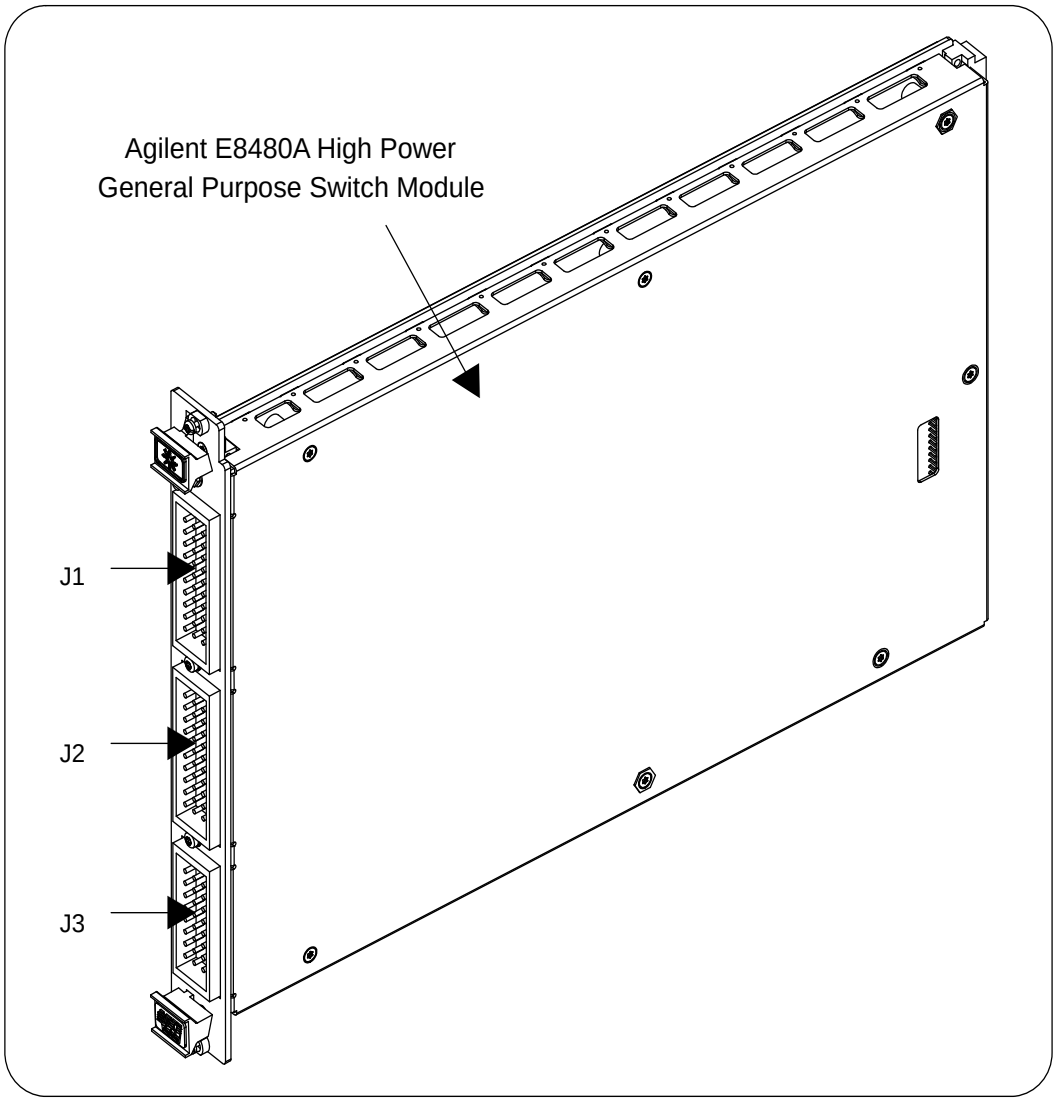

Figure 1-1. Agilent E8480A High Power General Purpose Switch Module

Artisan Technology Group - Quality Instrumentation ... Guaranteed | (888) 88-SOURCE | www.artisantg.com

Contacting Agilent Technologies

Any maintenance or repair of this product must be performed by qualified personnel. Contact your customer engineer through your local Agilent Technologies Service Center for repair and service.

- To find a list of your local Sales and Service Offices, go to the main Agilent Customer web site (http://www.agilent.com/find/assist).
- The Agilent Calibration and Repair Services web site (http://www.agilent.com/find/repair) describes Agilent calibration and repair services.
- The Agilent Parts web site (http://www.parts.agilent.com/) shows how to order replacement parts from Agilent.

Artisan Technology Group - Quality Instrumentation ... Guaranteed | (888) 88-SOURCE | www.artisantg.com

Safety Considerations

This product is a Safety Class I instrument that is provided with a protective earth terminal when installed in the mainframe. The instrument, mainframe, and all related documentation should be reviewed for familiarization with safety markings and instructions before operation or service.

Refer to the WARNINGS page (page 6) in this manual for a summary of safety information. Safety information for testing and service follows and is also found throughout this manual.

This section contains WARNINGS which must be followed for your protection and CAUTIONS which must be followed to avoid damage to the equipment when performing instrument maintenance or repair.

WARNING

SERVICE-TRAINED PERSONNEL ONLY. The information in this manual is for service-trained personnel who are familiar with electronic circuitry and are aware of the hazards involved. To avoid personal injury or damage to the instrument, do not perform procedures in this manual or do any servicing unless you are qualified to do so.

CHECK MAINFRAME POWER SETTINGS. Before applying power, verify that the mainframe setting matches the line voltage and that the correct fuse is installed. An uninterruptible safety earth ground must be provided from the main power source to the supplied power cord set.

GROUNDING REQUIREMENTS. Interruption of the protective (grounding) conductor (inside or outside the mainframe) or disconnecting the protective earth terminal will cause a potential shock hazard that could result in personal injury. (Grounding one conductor of a two-conductor outlet is not sufficient protection.)

IMPAIRED PROTECTION. Whenever it is likely that instrument protection has been impaired, the mainframe must be made inoperative and be secured against any unintended operation.

REMOVE POWER IF POSSIBLE. Some procedures in this manual may be performed with power supplied to the mainframe while protective covers are removed. Energy available at many points may, if contacted, result in personal injury. (If maintenance can be performed without power applied, the power should be removed.)

Artisan Technology Group - Quality Instrumentation ... Guaranteed | (888) 88-SOURCE | www.artisantg.com

WARNING

USING AUTOTRANSFORMERS. If the mainframe is to be energized via an autotransformer (for voltage reduction), make sure the common terminal is connected to neutral (that is, the grounded side of the main's supply).

CAPACITOR VOLTAGES. Capacitors inside the mainframe may remain charged even when the mainframe has been disconnected from its source of supply.

USE PROPER FUSES. For continued protection against fire hazard, replace the line fuses only with fuses of the same current rating and type (such as normal blow, time delay, etc.). Do not use repaired fuses or short-circuited fuseholders.

SHOCK HAZARD. Only service-trained personnel who are aware of the hazards involved should install, remove, or configure the switch module. Before you remove any installed module, disconnect AC power from the mainframe and from other modules that may be connected to the switch module.

CHANNEL WIRING INSULATION. All channels that have a common connection must be insulated so that the user is protected from electrical shock. This means wiring for all channels must be insulated as though each channel carries the voltage of the highest voltage channel.

CAUTION

MAXIMUM VOLTAGE/CURRENT. The maximum allowable voltage per channel for the E8480A Switch module is 150 Vdc or 280 Vac rms. The maximum current per channel is 12 Adc or ac (non-inductive). The maximum rated power capacity (external load) is 360 Wdc or 3360 VA per channel. Exceeding any limit may damage the Agilent E8480A High Power General Purpose Switch module.

STATIC ELECTRICITY. Static electricity is a major cause of component failure. To prevent damage to the electrical components in the E8480A High Power General Purpose Switch module, observe anti-static techniques whenever working on the device.

Artisan Technology Group - Quality Instrumentation ... Guaranteed | (888) 88-SOURCE | www.artisantg.com

Inspection/Shipping

This section contains initial (incoming) inspection and shipping guidelines for the E8480A High Power General Purpose Switch module.

Initial Inspection

Use the following steps as guidelines to perform initial (incoming) inspection for the Agilent E8480A module.

WARNING **To avoid possible hazardous electrical shock, do not perform electrical tests if there are signs of shipping damage to the shipping container or to the instrument.**

1. Inspect the shipping container for damage. If the shipping container or cushioning material is damaged, contact Agilent Technologies (see page 10).

2. Check the shipping contents and verify they are complete. Normally, the module you ordered (see Figure 1-1) and a User's Manual should be included. If the contents are incomplete or with mechanical damage/defect, contact Agilent Technologies (see page 10).

3. Install the switch module in a VXI mainframe. Refer to *Agilent E8480A High Power General Purpose Switch Module User's Manual* for more information.

4. Perform the Functional Verification test and the Performance Verification tests (optional). Refer to *Chapter 2* of this manual.

5. If any of the tests do not pass, refer to page 38 in *Chapter 3* for troubleshooting. If the module needs to be shipped to Agilent for service or repair, see Figure 1-2 for instructions on repackaging the module for shipment.

6. If all verification tests pass, the module is ready for use.

Artisan Technology Group - Quality Instrumentation ... Guaranteed | (888) 88-SOURCE | www.artisantg.com

Shipping Guidelines

If the instrument is to be shipped to Agilent for service or repair, follow the procedures in Figure 1-2.

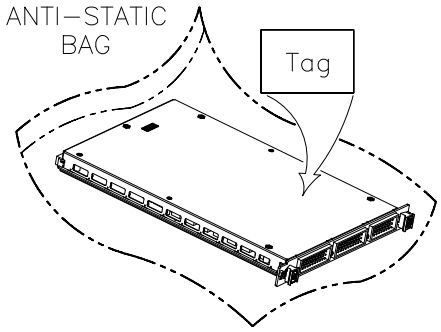

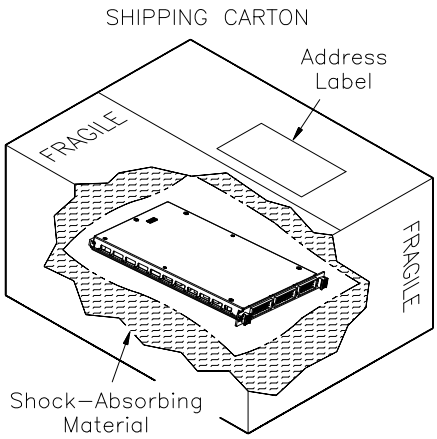

1. Prepare the Module

- Remove any user wiring from the module.
- Attach tag to module/pod that identifies:
  -- Owner
  -- Model Number/Serial Number
  -- Service Required
- Place tagged device in approved anti-static bag.

2. Package the Module

- Place packaged module in shipping carton.*
- Place 75 to 100 mm (3 to 4 inches) of shock-absorbing material around the module.
- Seal the shipping carton securely.
- Mark the shipping carton FRAGILE.

3. Ship the Module to Agilent

- Place address label on shipping carton.**
- Send carton to Agilent.

* We recommend that you use the same shipping material as those used in factory packaging (available from Agilent). For other (commercially-available) shipping materials, use a double wall carton with minimum 2.4 MPa (350 psi) test.

** See "Contacting Agilent Technologies" on page 10 for the address to which you can return the module.

Figure 1-2. Packaging/Shipping Guidelines

Artisan Technology Group - Quality Instrumentation ... Guaranteed | (888) 88-SOURCE | www.artisantg.com

Agilent E8480A Switch Module Description

The Agilent E8480A 40-Channel High Power General Purpose Switch module is a single-slot VXIbus C-Size register-based product which can operate in a C-Size VXIbus mainframe. It is supplied with an E1406A command module driver and a *VXIplug&play* driver. These drivers make the E8480A module appear as an "instrument" in the slot of a VXIbus mainframe. Each module is assigned an error queue, input and output buffers, and a status register.

NOTE *Instruments are based on the logical addresses of the plug-in modules. See Agilent E8480A High Power General Purpose Switch Module User's Manual to set the logical address (factory setting is 120) for the switch module to create an instrument.*

Switch Module Block Diagram

As shown in Figure 1-3, the E8480A module consists of 40 channels (channels 00 - 39), each of which uses a non-latching Form A relay. The relay channels can be individually controlled or can be scanned.

At power-on, power-off, or reset, all channels of the module are open. User inputs and outputs to each channel are made via the separately-ordered connectors (Option 105 and Option 106) which directly mate to the connectors (J1, J2, and J3) on the module's front panel. See the *Agilent E8480A High Power General Purpose Switch Module User's Manual* for more details on wiring information.

In addition, to get the full life of the relays, pads are provided on the module's printed circuit board for the installation of user provided protection circuitry (i.e., varistors). The "Emergency Reset" port on the module's front panel provides an easy way to allow user to take immediate action for relay protection in case of an emergency. For more information on relay protection, see the *Agilent E8480A High Power General Purpose Switch Module User's Manual*.

Switch Module Specifications

Specifications are listed in Appendix A of this manual. These specifications are the performance standards or limits against which the modules may be tested.

Switch Module Serial Numbers

Devices covered by this manual are identified by Agilent Technologies product number E8480A followed with a ten-character serial number (as listed on the title page). Agilent uses a two-part serial number in the form US00000000. The first 2-letter indicates the country in which the product was manufactured (US = United States). The last 8-digit is unique and assigned sequentially for that particular product number. The serial number plate is located on the right-hand shield near the backplane connectors.

Artisan Technology Group - Quality Instrumentation ... Guaranteed | (888) 88-SOURCE | www.artisantg.com

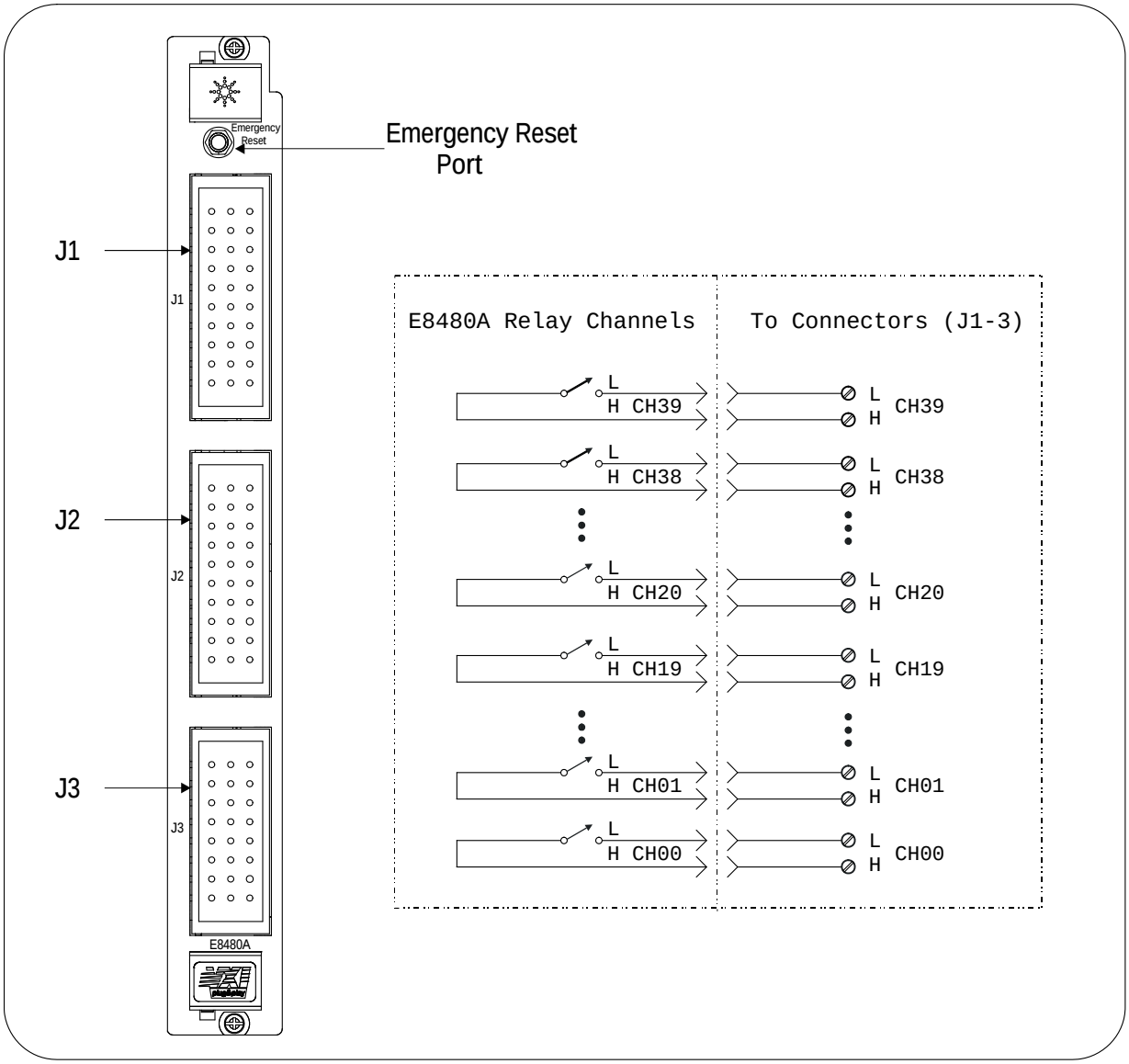

Figure 1-3. Agilent E8480A Front Panel and Simplified Block Diagram

Artisan Technology Group - Quality Instrumentation ... Guaranteed | (888) 88-SOURCE | www.artisantg.com

Switch Module Options

User inputs to each channel are made via the separately-ordered female connectors which mate to the male connectors J1, J2, and J3 on the module's front panel (see Figure 1-4). Option 105 contains two 30-pin female connectors for mating to the J1 and J2 male connectors and 60 crimp-and-insert contacts for easily wiring user connections. Option 106 contains one 24-pin female connector for mating to the J3 male connector and 24 crimp-and-insert contacts for easily wiring user connections.

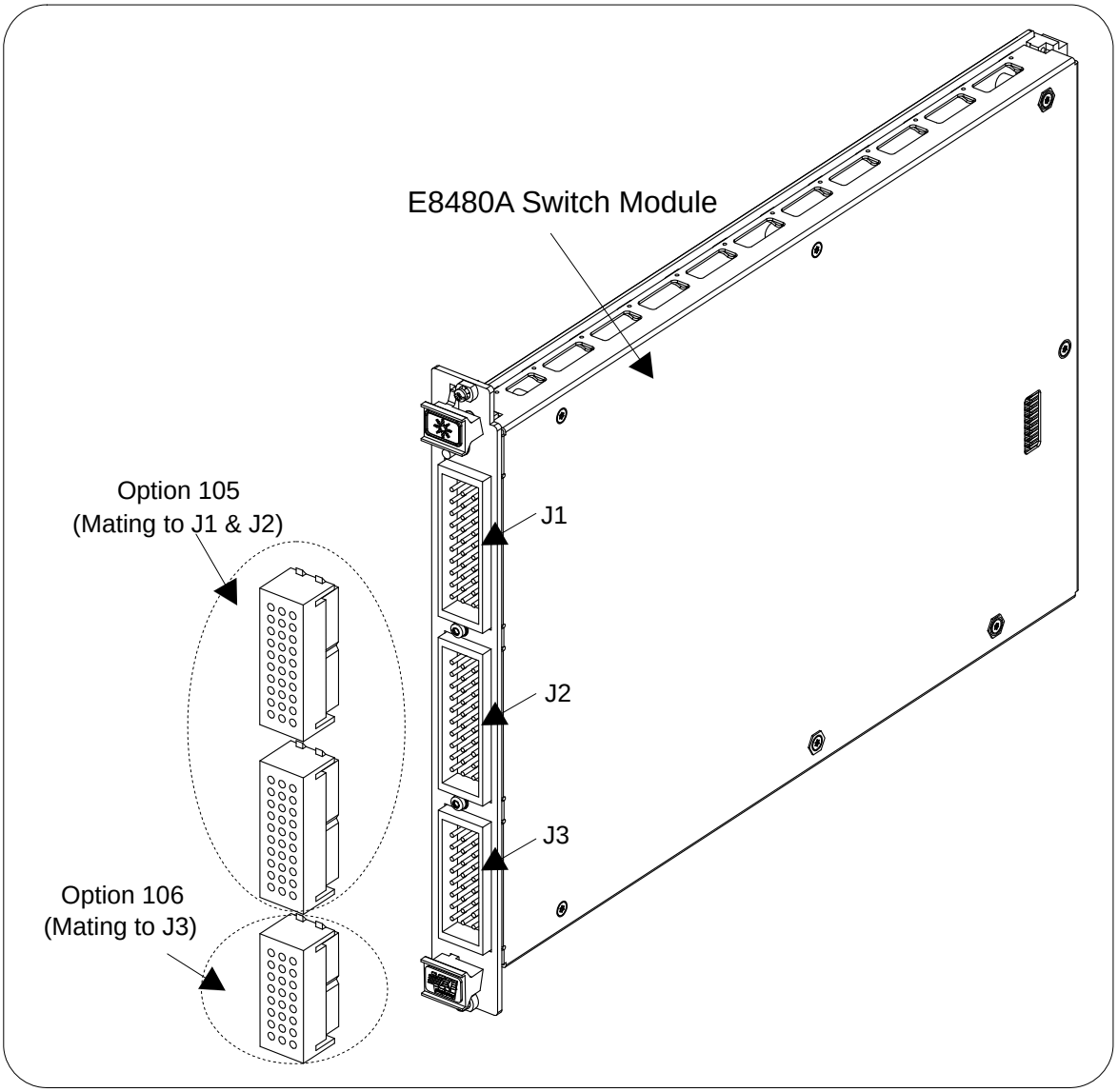

Figure 1-4. Option 105 & Option 106

Artisan Technology Group - Quality Instrumentation ... Guaranteed | (888) 88-SOURCE | www.artisantg.com

Notes:

Artisan Technology Group - Quality Instrumentation ... Guaranteed | (888) 88-SOURCE | www.artisantg.com

Chapter 2
Verification Tests

Introduction

The purpose of the functional verification tests described in this chapter is to provide a relatively fast and easy way to determine that the Agilent E8480A High Power General Purpose Switch module is operational. For more in-depth, higher confidence level test procedures, use the two performance verification tests in this chapter. The verification tests are:

- Functional Verification Test: Self-Test
- Performance Verification Test: Closed-Channel Resistance Test
- Performance Verification Test: DC Isolation Test

General Test Requirements

Before performing the verification tests, you should check the requirements and assumptions in this section.

Recommended Test Equipment

Table 2-1 lists the test equipment recommended for testing and servicing the module. Essential requirements for each piece of test equipment are described in the Requirements column.

Table 2-1. Recommended Test Equipment

Instrument	Requirements	Recommended Model	Use [a]
Controller, GPIB	GPIB compatibility as defined by IEEE Standard 488-1987 and the identical ANSI Standard MC1.1: SH1, AH1, T2, TE0, L2, LE0, SR0, RL0, PP0, DC0, DT0, and C1, 2, 3, 4, 5.	IBM Compatible PC with Agilent 82350 GPIB card installed	F, P, T
Mainframe	Compatible with switch module	Agilent E8401A/03A/04A/08A	F, P, T
Command Module	Compatible with switch module	Agilent E1406A	F, P, T
DC Power Supply	Deliver 1 A dc constant current	Agilent 6545A	P, T
Digital Multimeter	DC voltage (up to 10 V) 2-wire Ohms (up to 1 GΩ)	Agilent 3458A or Agilent 34401A	P, T

a. F = Functional Verification Tests, P = Performance Verification Tests, T = Troubleshooting

NOTE *The performance tests, troubleshooting and repair procedures are written for the recommended test equipment. Substituting alternate test equipment may require that some procedures be modified.*

Artisan Technology Group - Quality Instrumentation ... Guaranteed | (888) 88-SOURCE | www.artisantg.com

Test Conditions/ Procedures

You should complete the performance verification tests at least once a year. For heavy use or severe operating environments, perform the tests more often.

The verification tests assume that the person performing the tests understands how to operate the mainframe, the switch module, and specified test equipment. The test procedures do not specify equipment settings for test equipment, except in general terms. It is assumed that a qualified, service-trained technician will select and connect the cables, adapters, and probes required for the test.

It is assumed that the temperature is no greater than 25ºC and the relative humidity is no greater than 40% (within the specifications as shown in *Appendix A)*.

Performance Test Record

The results of each performance verification test may be recorded in the Performance Test Record (Table 2-3). You can make a copy of this form, if desired.

Recommended System Configuration

All verification tests in this chapter assume the following:

- An E1406A command module and an E8480A switch module are installed in the mainframe.
- The Agilent SICL Library, VISA extensions, and an Agilent 82350 GPIB card had been installed and properly configured in your computer.
- The computer is connected to the E1406A command module via GPIB interface. The GPIB select code is 7, the GPIB primary address is 09, and the E8480A module is at logical address 120 (secondary address = 120/8 = 15).
- The E8480A SCPI driver (Revision A.11.01 or later) had been downloaded into the E1406A command module. For access to the most up to date instrument drivers, go to the web site (http://www.agilent.com/find/inst_drivers).
- DMM is an Agilent 3458A.

NOTE *You may need to change the module's address and/or command syntax to perform the tests for your setup. However, substituting alternate configuration may require that some procedures be modified. See Agilent E8480A High Power General Purpose Switch Module User's Manual for information on address selection, cabling guidelines, and the related SCPI commands.*

Artisan Technology Group - Quality Instrumentation ... Guaranteed | (888) 88-SOURCE | www.artisantg.com

Functional Verification Test

The Functional Verification Test for the Agilent E8480A switch module consists of sending the self-test command (*TST?) and checking the response. This test can be used at any time to verify that the module is connected properly and is responding to basic commands. However, it does not ensure module's switching operability.

Test Procedure

1. Verify that the E8480A switch module is properly installed in the mainframe and the mainframe has passed its power-on sequence test.

2. Verify that the computer is properly connected to the mainframe via GPIB interface.

3. Send the *TST? command to the module (GPIB primary address is 09 and secondary address is 120/8 = 15) from *Agilent VISA Assistant* application program.

4. A "+0" returned means no self-test failure, while any non-zero error code returned indicates a self-test failure. See Table 2-2 below for the description of self-test error codes.

NOTE *Test failures can be caused by improper cabling,improper selection of the interface select code, primary, and/or secondary address setting. Verify proper connection and address selection before troubleshooting. As required, see Agilent E8480A High Power General Purpose Switch Module User's Manual for more information on module installation, address selection, and the related SCPI commands.*

Corrective Action

An non-zero error code is returned when the module self-test fails. The meaning of each code is given in Table 2-2. If a self-test failure occurs, recycle power and repeat the self-test procedure as shown above. If the problem reoccurs, the module requires to be repaired. Contact Agilent Technologies for repair and service (see page 10).

Table 2-2. Self-test Error Codes

Error [a]	Description (probable Causes)
+0	Self-test passes.
+ss01	Firmware error.
+ss02	Bus error (problem communicating with the module).
+ss03	Incorrect ID information in ID register.
+ss05	Card data register incorrect (hardware and firmware with different values).
+ss10	Interrupt expected but not received.
+ss11	Card busy time incorrect.

a. ss = card number (with leading zero deleted, the typical is 1)

Artisan Technology Group - Quality Instrumentation ... Guaranteed | (888) 88-SOURCE | www.artisantg.com

Wiring the Test Fixture for Performance Tests

To simplify the following performance verification tests (Closed-Channel Resistance Test and DC Isolation Test), both Option 105 and Option 106 (see Figure 1-4) are required to make the test connections. Option 105 contains two 30-pin female connectors for mating to the J1 and J2 male connectors and 60 crimp-and-insert contacts for accepting test wirings. Option 106 contains one 24-pin female connector for mating to the J3 male connector and 24 crimp-and-insert contacts for accepting test wirings. Figure 2-1 shows the typical connections for the following performance tests, as well as the J1 through J3 connectors pinout matching to the channel numbers.

NOTE *We recommend to use wire sizes (AWG 20-22) when wiring the test fixture. The maximum wire size can be 12AWG. Wire ends should be stripped 5.84mm (0.23 inch) and tinned to prevent single strands from shorting to adjacent terminals. See the Agilent E8480A High Power General Purpose Switch Module User's Manual for more information on cabling guidelines.*

Artisan Technology Group - Quality Instrumentation ... Guaranteed | (888) 88-SOURCE | www.artisantg.com

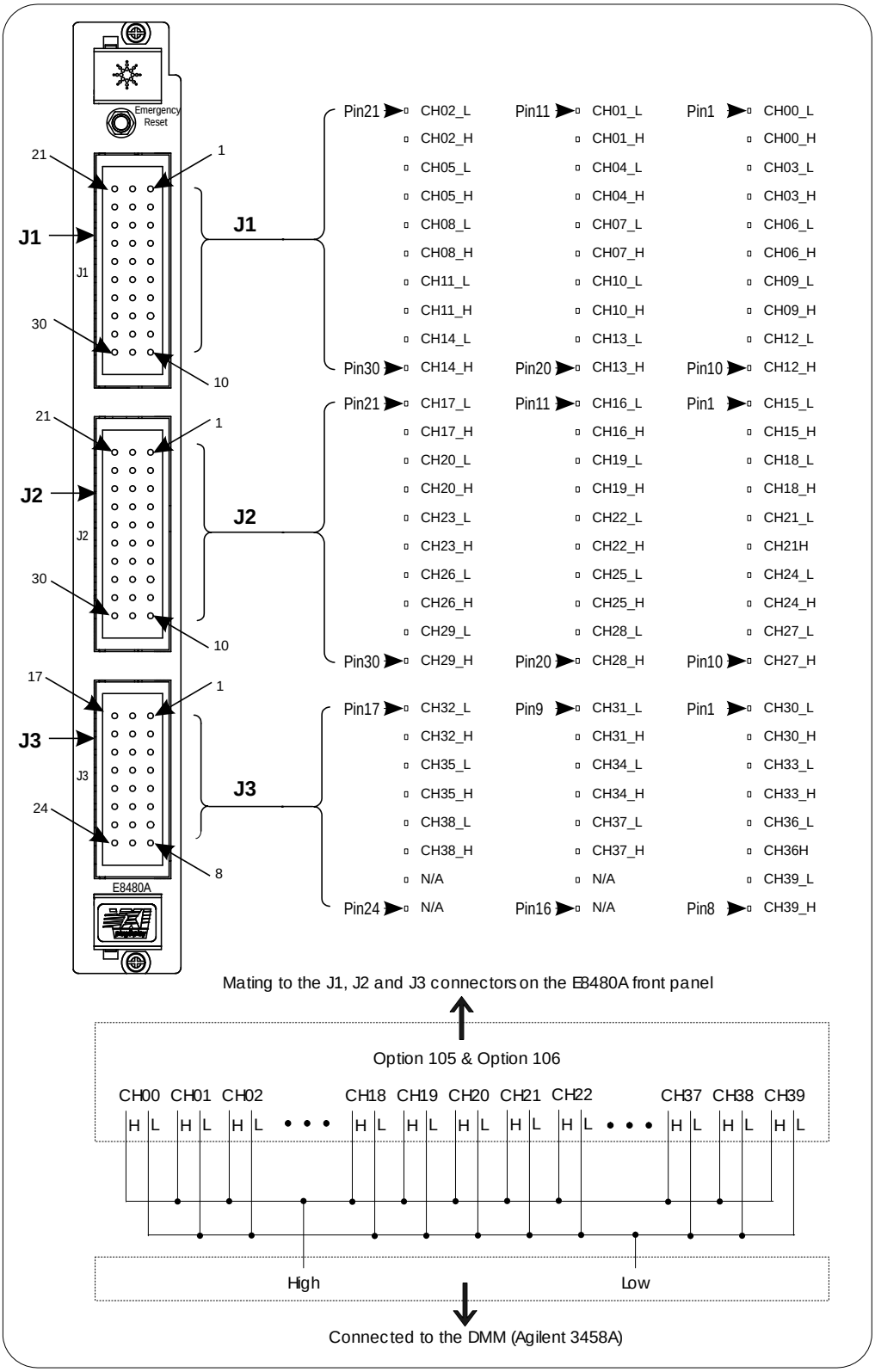

Figure 2-1. Typical Test Fixture

Artisan Technology Group - Quality Instrumentation ... Guaranteed | (888) 88-SOURCE | www.artisantg.com

Performance Test: Closed-Channel Resistance Test

The purpose of this test is to verify all Form-A relays of the E8480A module. It is suitable for identifying a damaged relay.

In general, a new relay should have a contact resistance of 0.1 Ω or less. Relays with contact resistance in excess of 1 Ω should be replaced. Performance of a relay will deteriorate with use.

In the following test, by measuring the dc voltage between the channel High and Low lines, the relay contact resistance is then calculated with the equation: $R = V/I$. Since the DC power supply is set to deliver a constant current of 1 Adc, the relay contact resistance would be equivalent to the value of measured dc voltage.

NOTE *In the following procedures, **ss** represents the card number (01-99) of the switch module. The typical value is 1. A leading zero can be omitted. cc represents module channel number (00 - 39).*

NOTE *In the following procedures, all commands sending to the switch module (GPIB primary address is 09 and secondary address is 120/8 = 15) are from the VISA Assistant Application Program.*

Test Procedure

1. Verify that the E8480A switch module is properly installed in the mainframe and the mainframe has passed its power-on sequence test.
2. Verify that the computer is properly connected to the mainframe via GPIB interface.
3. Make hardware connections as shown in Figure 2-2. See Figure 2-1 for the connectors pinout matching to the channel numbers.
4. Power on the DC power supply (Agilent 6545A), and set it to deliver a constant current of 1 Adc.

NOTE *As required, see the Agilent 6545A DC Power Supply Operating Manual for more configuration information.*

5. Power on the DMM (Agilent 3458A), and set the DMM to DCV, autorange.

NOTE *As required, see the Agilent 3458A Multimeter Operating, Programming, and Configuration Manual for more configuration information.*

Artisan Technology Group - Quality Instrumentation ... Guaranteed | (888) 88-SOURCE | www.artisantg.com

6. Measure dc voltage between High and Low Lines for channel 00.

   -- Send *RST to the switch module to open all channel relays.
   -- Send CLOS (@*ss00*) to the switch module to close channel 00.
   -- Read the DMM dc voltage reading and calculate the closed-channel resistance using the equation: $R = V/I = V/1 = V$. Record the reading in Table 2-3.
   -- Send OPEN (@*ss00*) to the switch module to open channel 00.

7. Repeat Step 6 for all remaining channels with the following change:

   -- Use CLOS (@*sscc*) and OPEN (@*sscc*), where *ss* = card number and *cc* = channel numbers (01 - 39).

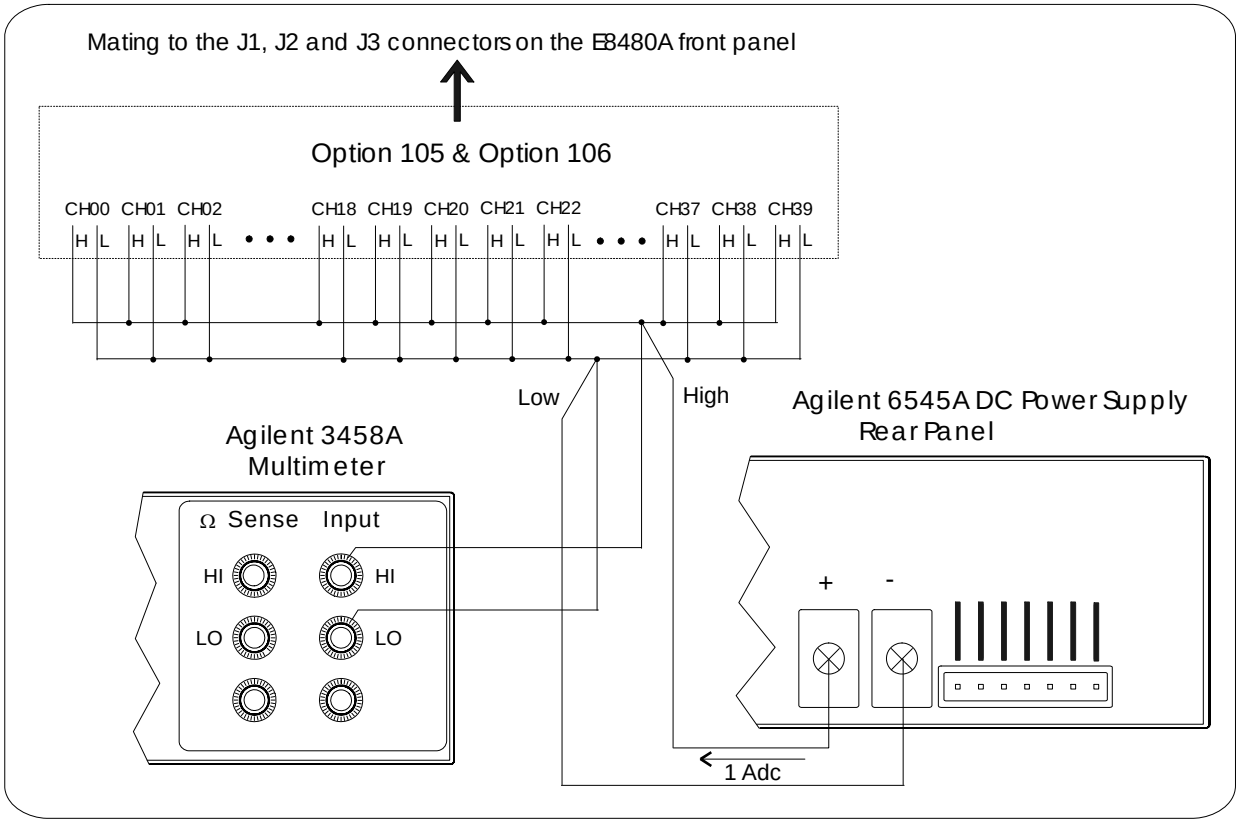

Figure 2-2. Closed-Channel Resistance (Channel High to Low)

Artisan Technology Group - Quality Instrumentation ... Guaranteed | (888) 88-SOURCE | www.artisantg.com

Corrective Action

As shown in *Appendix A*, the initial closed-channel resistance for any relay contact of the E8480A module is 0.1 Ω. However, the electromechanical relays are subject to normal wear-out (see *Appendix B*). As the relay begins to wear out, its contact resistance increases. When the resistance is in excess of 1 Ω or the end of relay life approaches, the relay should be replaced.

According to the repair strategy for the E8480A module (see page 35), you may need to replace entire printed circuit assembly (PCA) when any relay channel's performance is out of specification limit. However, the sensitivity of the application should be weighed against the cost of replacing the entire PCA board (P/N E8480-60001) with some useful life remaining.

WARNING **Any maintenance and repair of the module must be performed by qualified personnel. Contact Agilent Technologies (see page 10) for repair and service as required.**

Performance Test: DC Isolation Test

The purpose of this test is to verify that sufficient DC isolation (> 1.0 GΩ) exists between various points on the switch module. The DC isolation test is checked from Channel High to Channel Low, Channel High to Chassis, and Channel Low to Chassis.

NOTE *The DMM should be capable of measuring at least 1 GΩ. If the DMM indicates an overload, record the reading as ">Rmax", where Rmax is the highest resistance that the DMM can measure. For example, if the DMM is an Agilent 3458A, the reading should be recorded as ">1.2 GΩ" in Table 2-3.*

NOTE *In the following procedures, all commands sending to the switch module (GPIB primary address is 09 and secondary address is 120/8 = 15) are from the VISA Assistant Application Program.*

Test Procedure

1. Verify that the E8480A switch module is properly installed in the mainframe and the mainframe has passed its power-on sequence test.
2. Verify that the computer is properly connected to the mainframe via GPIB interface.
3. Make hardware connections as shown in Figure 2-3 to measure the DC isolation resistance for Channel High to Channel Low. See Figure 2-1 for the connectors pinout matching to the channel numbers.
4. Power on the DMM (Agilent 3458A), and set the DMM to 2-wire Ohms, 1 GΩ range.

Artisan Technology Group - Quality Instrumentation ... Guaranteed | (888) 88-SOURCE | www.artisantg.com

NOTE *As required, see the Agilent 3458A Multimeter Operating, Programming, and Configuration Manual for more configuration information.*

5. Send *RST to the switch module to open all channel relay contacts.

6. Read the DMM display and record the reading in Table 2-3.

7. Repeat steps 3 through 6 to measure DC isolation resistance for Channel High to Chassis with the following change:

   -- In step 3, make hardware connection as shown in Figure 2-4.

8. Repeat steps 3 through 6 to measure DC isolation resistance for Channel Low to Chassis with the following change:

   -- In step 3, make hardware connection as shown in Figure 2-5.

Corrective Action

As shown in *Appendix A*, the DC Isolation resistance between any two points of the E8480A module should be greater than 1.0 GΩ when the temperature is no greater than 25ºC and the relative humidity is no greater than 40%. The DC Isolation Test failure is most likely caused by the damaged relay(s).

When a test failure occurs, it may indicate that some relay(s) on the board are defective. According to the repair strategy for the E8480A module (see page 35), you may need to replace entire PCA board if any relay on the board is defective. However, the sensitivity of the application should be weighed against the cost of replacing the entire PCA board (P/N E8480-60001) with some useful life remaining.

WARNING **Any maintenance and repair of the module must be performed by qualified personnel. Contact Agilent Technologies (see page 10) for repair and service as required.**

Artisan Technology Group - Quality Instrumentation ... Guaranteed | (888) 88-SOURCE | www.artisantg.com

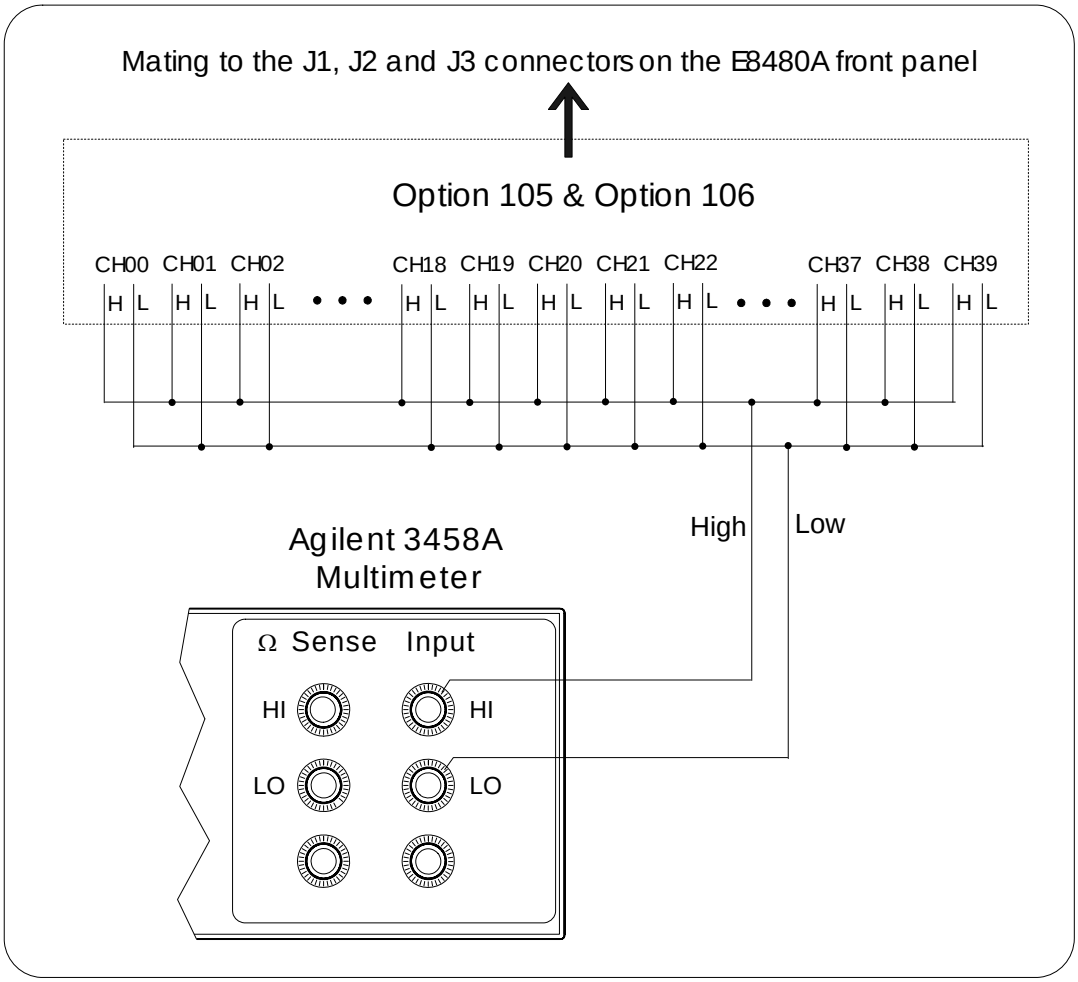

Figure 2-3. Channel High to Channel Low Isolation

Artisan Technology Group - Quality Instrumentation ... Guaranteed | (888) 88-SOURCE | www.artisantg.com

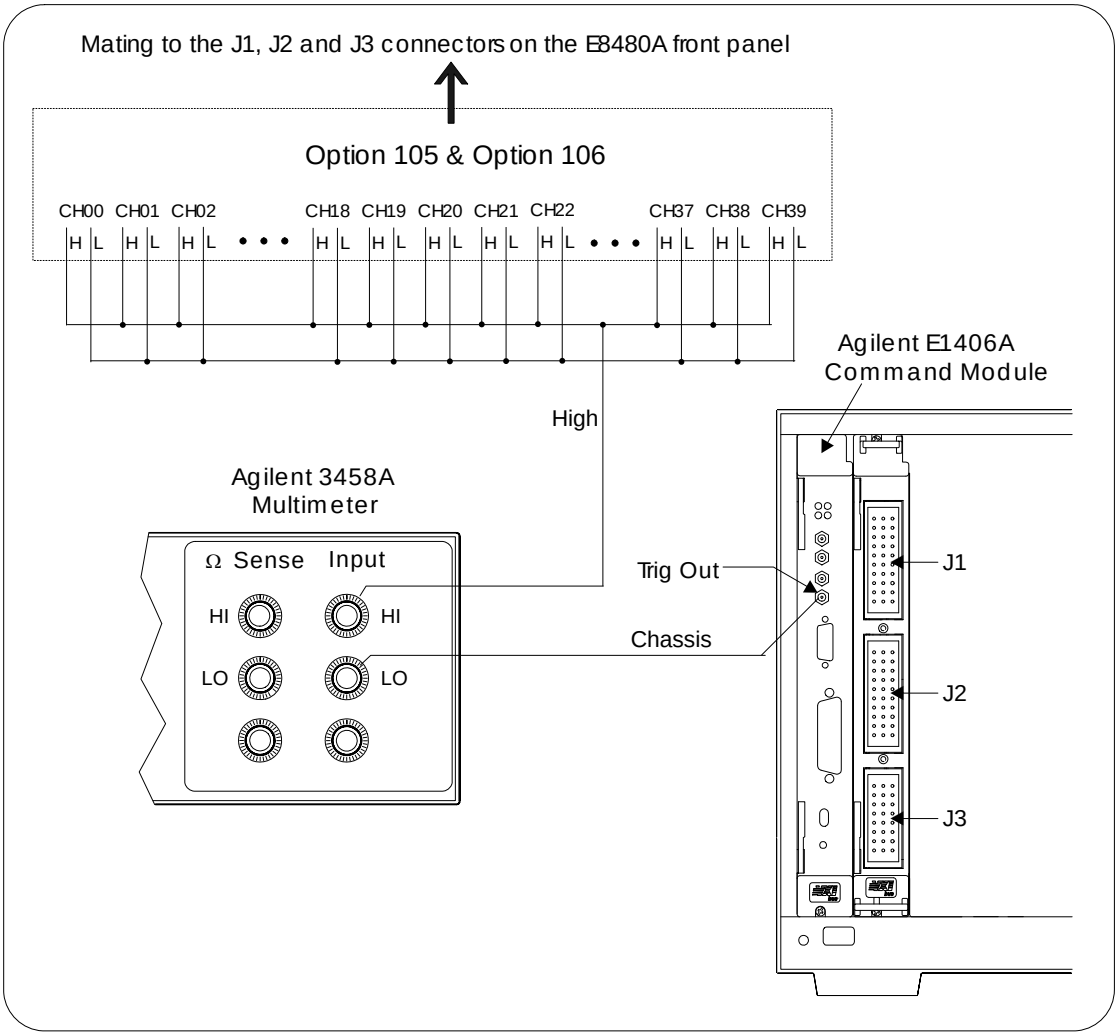

Figure 2-4. Channel High to Chassis Isolation

NOTE *Use any convenient chassis connection. The illustration shows the DMM LO terminal connected to the outside of the Trig Out BNC on the E1406A command module.*

Artisan Technology Group - Quality Instrumentation ... Guaranteed | (888) 88-SOURCE | www.artisantg.com

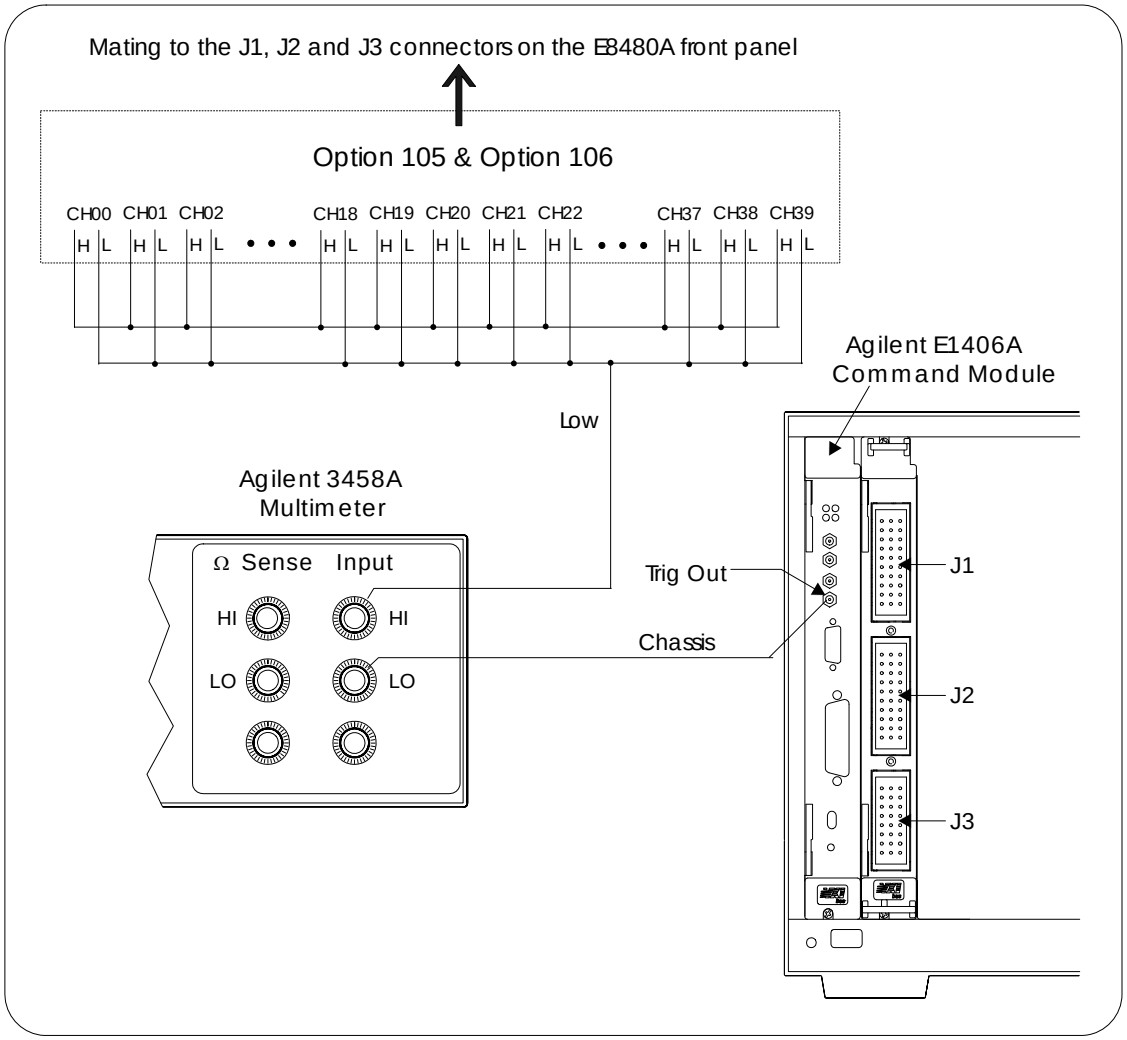

Figure 2-5. Channel Low to Chassis Isolation

NOTE *Use any convenient chassis connection. The illustration shows the DMM LO terminal connected to the outside of the Trig Out BNC on the E1406A command module.*

Artisan Technology Group - Quality Instrumentation ... Guaranteed | (888) 88-SOURCE | www.artisantg.com

Performance Test Record

Table 2-3 is a form you can copy and use to record performance verification test results for the E8480A module.

NOTE *In the Performance Test Record, the test limits for Closed-Channel Resistance Test and DC Isolation Test are single-sided (i.e., there is an upper limit or a lower limit, but not both).*

Table 2-3. Performance Test Record (Page 1 of 3)

Model _____ **Report Number** _____ **Date** _____

General Information

Test Facility	
Name _____	Phone _____
Address _____	Fax _____
City, State, ZIP _____	e-Mail _____
Customer _____	Tested by _____
Notes	
_____	
_____	
_____	
_____	
_____	
_____	
_____	

Test Equipment Used

Description	***Model No.***	***Trace No.***	***Cal Due Date***
1. _____	_____	_____	_____
2. _____	_____	_____	_____
3. _____	_____	_____	_____
4. _____	_____	_____	_____
5. _____	_____	_____	_____

Artisan Technology Group - Quality Instrumentation ... Guaranteed | (888) 88-SOURCE | www.artisantg.com

Table 2-3. Performance Test Record (Page 2 of 3)

Model _____ **Report Number** _____ **Date** _____

Test No/ Description	Minimum Value [a]	Measured Value (Channel High to Channel Low)	Maximum Value
Closed-Channel Resistance Test (*Values in Ohms****)***			
Channel 00		_____	1.0
Channel 01		_____	1.0
Channel 02		_____	1.0
Channel 03		_____	1.0
Channel 04		_____	1.0
Channel 05		_____	1.0
Channel 06		_____	1.0
Channel 07		_____	1.0
Channel 08		_____	1.0
Channel 09		_____	1.0
Channel 10		_____	1.0
Channel 11		_____	1.0
Channel 12		_____	1.0
Channel 13		_____	1.0
Channel 14		_____	1.0
Channel 15		_____	1.0
Channel 16		_____	1.0
Channel 17		_____	1.0
Channel 18		_____	1.0
Channel 19		_____	1.0
Channel 20		_____	1.0
Channel 21		_____	1.0
Channel 22		_____	1.0
Channel 23		_____	1.0
Channel 24		_____	1.0
Channel 25		_____	1.0
Channel 26		_____	1.0
Channel 27		_____	1.0
Channel 28		_____	1.0
Channel 29		_____	1.0
Channel 30		_____	1.0
Channel 31		_____	1.0
Channel 32		_____	1.0
Channel 33		_____	1.0
Channel 34		_____	1.0
Channel 35		_____	1.0
Channel 36		_____	1.0
Channel 37		_____	1.0
Channel 38		_____	1.0
Channel 39		_____	1.0

a. Single-sided specification - Minimum Value does not apply.

Artisan Technology Group - Quality Instrumentation ... Guaranteed | (888) 88-SOURCE | www.artisantg.com

Table 2-3. Performance Test Record (Page 3 of 3)

Model _____	**Report Number** _____	**Date** _____

Test Description	Minimum Value	Measured Value	Maximum Value [a]
DC Isolation Test (*Values in Ohms****)***			
Channel High to Channel Low Channel High to Chassis Channel Low to Chassis	1.2E9 1.2E9 1.2E9	_____ _____ _____	

a. Single-sided specification - Maximum Value does not apply.

Artisan Technology Group - Quality Instrumentation ... Guaranteed | (888) 88-SOURCE | www.artisantg.com

Notes:

Artisan Technology Group - Quality Instrumentation ... Guaranteed | (888) 88-SOURCE | www.artisantg.com

Chapter 3
Service

Introduction

This chapter contains service information for the Agilent E8480A High Power General Purpose Switch module, including repair strategy, ordering replaceable parts, repair/maintenance guidelines, as well as troubleshooting techniques.

WARNING **Do not perform any of the service procedures shown unless you are a qualified, service-trained technician, and have read the "Safety Considerations" in Chapter 1.**

NOTE *The performance tests, troubleshooting and repair procedures are written for the recommended test equipment as shown in Table 2-1 on page 19 of this manual. Substituting alternate test equipment may require that some procedures be modified.*

Repair Strategy

Agilent recommends replacement of the entire printed circuit assembly (PCA) board for the E8480A switch module when any of the relay fails or the end of relay life approaches. However, the sensitivity of the application should be weighed against the cost of replacing the entire circuit board with some useful life remaining. The replacement parts are also available for the Option 105/106. Table 3-1 shows the ordering information for the user-replaceable parts. See Figure 3-1 for the simplified diagram of the replaceable PCA board. See Figure 1-4 for the Option 105/106. For more repair information, contact Agilent Technologies (see page 10).

NOTE *As required, see Appendix C of this manual for the detailed schematics and component locator diagrams of Agilent E8480A High Power General Purpose Switch Module.*

Artisan Technology Group - Quality Instrumentation ... Guaranteed | (888) 88-SOURCE | www.artisantg.com

Replaceable Parts

The replaceable part for the E8480A High Power General Purpose Switch module is the printed circuit assembly (PCA) board. To order a replaceable PCA board (see Figure 3-1) or the replaceable parts for Option 105/106 (see Figure 1-4), specify the Agilent part number listed in Table 3-1 and the quantity required. Send your order to Agilent Technologies. See "Contact Agilent Technologies" in *Chapter 1* for details.

Table 3-1. Agilent E8480A Replaceable Parts

Reference Designator	Part Number	Quantity	Description
A1	E8480-60001	1	E8480A Switch Module PCA board
Option 105	E8480-61105	1	Two 30-pin connectors with 60 contacts
Option 106	E8480-61106	1	One 24-pin connector with 24 contacts

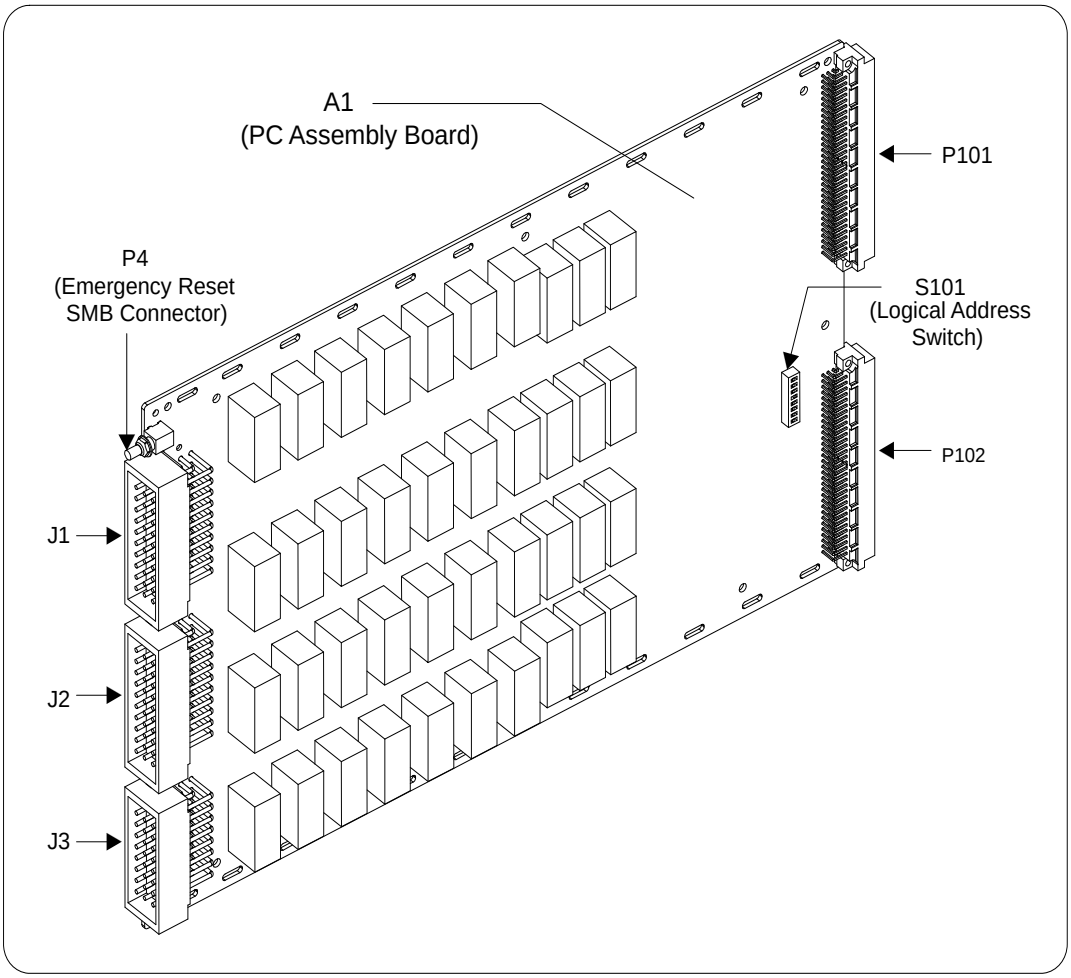

Figure 3-1. Printed Circuit Assembly (PCA) of the E8480A Module

Artisan Technology Group - Quality Instrumentation ... Guaranteed | (888) 88-SOURCE | www.artisantg.com

Repair/Maintenance Guidelines

This section provides guidelines for repairing and maintaining the Agilent E8480A module, including:

- ESD precautions
- Cleaning Requirements

ESD Precautions

Electrostatic discharge (ESD) may damage static-sensitive devices in the switch modules. This damage can range from slight parameter degradation to catastrophic failure. When handling module assemblies, follow these guidelines to avoid damaging components:

- Always use a static-free work station with a pad of conductive rubber or similar material when handling electronic components.
- After you remove an assembly from the module, place the assembly on a conductive surface to guard against ESD damage. Do not stack assemblies.

Cleaning Requirements

Preventive maintenance for the Agilent E8480A switch module consists of periodically cleaning the module to remove dust and debris that will build up over time. The cleaning interval is dependent on the environment conditions and application. For best results, you should clean the module once a year or more often if the module is used in extremely dusty or very humid area. The front panel and the top/bottom cover can be cleaned with a dry cloth or one slightly dampened with water.

WARNING **To prevent electrical shock, disconnect any AC power from the mainframe and from other modules that may be connected to the switch module before cleaning.**

Artisan Technology Group - Quality Instrumentation ... Guaranteed | (888) 88-SOURCE | www.artisantg.com

Troubleshooting

To troubleshoot an Agilent E8480A switch module problem, you should first identify the problem, and then isolate the cause to a user-replaceable assembly.

NOTE *Test failures can be caused by improper cabling,improper selection of the interface select code, primary, and/or secondary address setting. Verify proper connection and address selection before troubleshooting. As required, see the Agilent E8480A High Power General Purpose Switch Module User's Manual for information on address selection and cabling guidelines.*

Identifying the Problem

Table 3-2 lists some common problems, along with symptoms and possible solutions.

NOTE *If the problem can not be identified or traced to a user-replaceable assembly with the following procedures, contact Agilent Technologies for repair and service (see page 10).*

Table 3-2. Agilent E8480A Common Problems

Problem Type	Symptom	Recommended Actions [a]
Self-test Errors	Non-zero error code in response to the *TST? command.	See page 21 in *Chapter 2*.
Operator Errors	Non-zero error code in response to the SYST:ERR? command.	See *Appendix C - Error Messages* in *the Agilent E8480A High Power General Purpose Switch Module User's Manual* for module errors and causes.
Catastrophic Failures	Not responding to commands.	See "Testing the Assembly" later in this chapter.
Performance Out of Specification	Failing Closed-channel Resistance Test	See page 26 in *Chapter 2*.
	Failing DC Isolation Test	See page 27 in *Chapter 2*.

a. Verify proper connections and correct logical address setting before troubleshooting.

Artisan Technology Group - Quality Instrumentation ... Guaranteed | (888) 88-SOURCE | www.artisantg.com

Testing the Assembly

You can use the tests and checks in Table 3-3 to identify the apparent problem on the user-replaceable assembly. If there are no apparent problems following the typical checks, run the Verification Tests in Chapter 2 to see if the module is defective. See Figure 3-1 for the locations of the checked components on the E8480A printed circuit assembly (E8480-60001) board. The typical checks for the switch module include:

- Checking for heat damage
- Checking logical address switch setting
- Checking connectors contacts

Table 3-3. Agilent E8480A Tests/Checks

Test/Check	Reference Designator	Check:
Heat Damage	N.A.	Discolored PCA board Damaged insulation Evidence of arcing
Logical Address Switch	S101	Logical Address setting
Connectors	P101, P102, P4, J1, J2 and J3	Bent or damaged connectors

Checking for Heat Damage

Inspect the assembly for signs of abnormal internally generated heat such as discolored printed circuit boards or components, damaged insulation, or evidence of arcing. If there is damage, do not operate the module until you have corrected the problem.

Checking Logical Address Switch

Verify that the logical address switch (S101) is set correctly (factory set at 120). See *Agilent E8480A High Power General Purpose Switch Module User's Manual* for information on address setting.

Checking Connectors

Check all connectors (P101, P102, P4, J1, J2 and J3) for bent pins or damaged contacts. If any of them is damaged, you may have to replace the entire PCA (P/N E8480-60001).

WARNING **Any maintenance and repair of the module must be performed by qualified personnel. Contact Agilent Technologies (see page 10) for repair and service as required.**

Artisan Technology Group - Quality Instrumentation ... Guaranteed | (888) 88-SOURCE | www.artisantg.com

Module Disassembly

Use the following procedures to disassemble the E8480A switch module (see Figure 3-2).

NOTE *To avoid damage to the screw head slots, use a T8 Torx driver to remove the front panel and a T10 Torx driver to remove the top/bottom covers.*

1. To remove the top and bottom covers:

   -- Remove the seven T10 Torx screws from the top cover as shown.
   -- Lift the top cover off the module.
   -- Turn the A1 assembly over and lift off the bottom cover.

2. To remove the front panel:

   -- Remove the nut and washer from the SMB connector as shown.
   -- Remove the two T8 Torx screws from the front panel handles as shown.
   -- Remove the two T8 Torx screw from the front panel as shown.
   -- Remove the front panel off the A1 assembly.

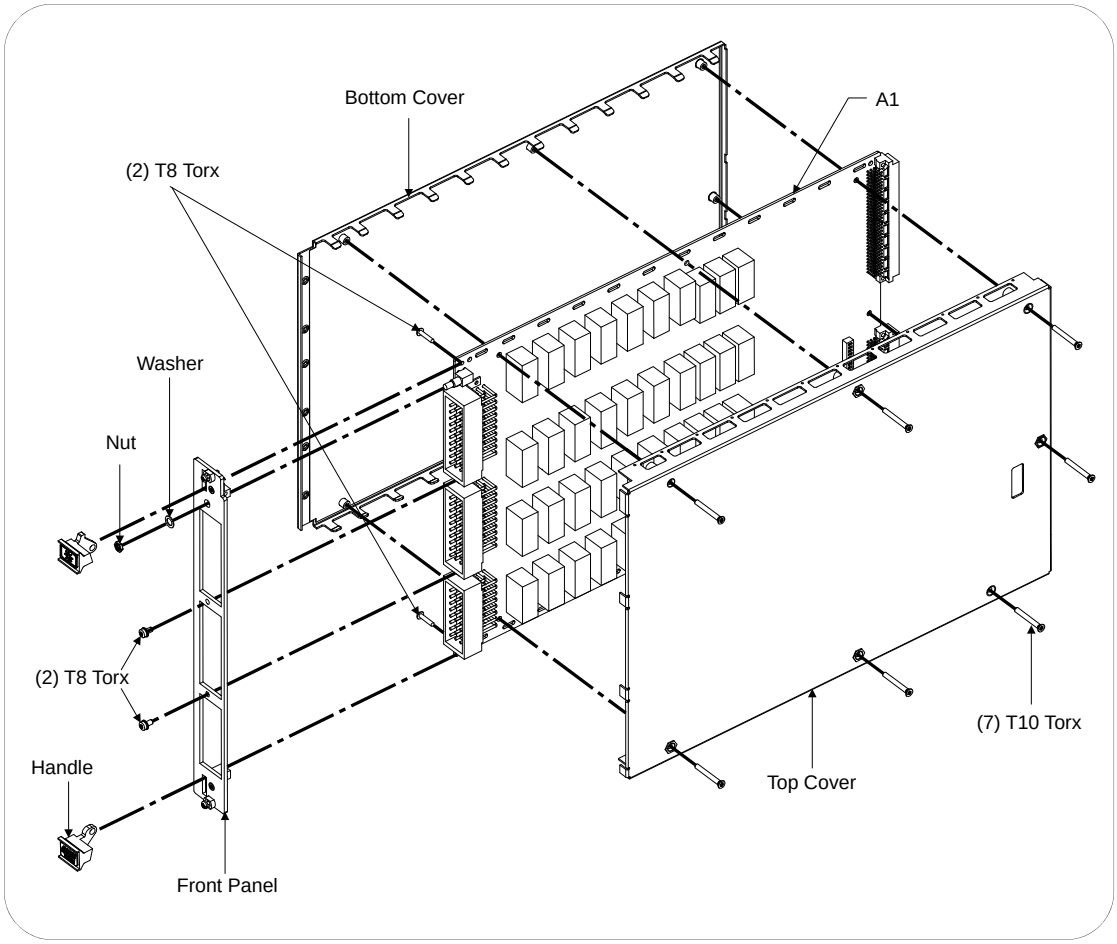

Figure 3-2. Agilent E8480A Module Disassembly

Artisan Technology Group - Quality Instrumentation ... Guaranteed | (888) 88-SOURCE | www.artisantg.com

Appendix A
E8480A Specifications

ITEMS		SPECIFICATIONS
GENERAL CHARACTERISTICS		
Module Size/Device Type:		C-Size 1-Slot, Register based, A16, slave only, P1 and P2 Connectors
Total Channels:		40 channels
Relays Type:		Non-latching Form A
Typical Relay Life:	No Load: At Rated Load (5 Vdc & 0.1A):	1×10^7 1×10^5
Power Requirements:	Peak Module Current: Dynamic Module Current:	3.5 A @ +5 V 0.1 A @ +5 V
Watts/slot:		86 W
Cooling/slot:		0.70 mm H_2O @ 6.9 Liter/sec for 10^oC rise
Operating Temperature:		0 - 55^oC
Operating Humidity:		65% RH, 0 - 40^oC
INPUT CHARACTERISTICS		
Maximum Voltage:		150 Vdc, 280 Vac_{rms}, 2500 Vpk
Maximum Current:	Non-inductive Per Channel: [a]	12 Adc @ 30 Vdc, or 12 Aac_{rms}
Maximum Power:	Per channel: Per Module:	360 W, or 3360 VA 2160 W, or 20160 VA
DC PERFORMANCE		
Initial Closed Channel Resistance:		0.1 Ω (typical)
Isolation resistance: **(between any two points)**	≤ (40^oC, 65% RH): ≤ (25^oC, 40% RH):	> 10^8 Ω > 10^9 Ω
Thermal Offset:	Per Channel:	< 10 μV
AC PERFORMANCE		
Capacitance:	Hi to Lo: Channel to Channel: Channel to Chassis:	< 200 pF < 200 pF < 200 pF
Bandwidth (-3 dB):		10 MHz
Crosstalk: **(Channel to Channel for Zl = Zs = 50Ω)**	< 10 KHz: < 100 KHz:	< -65 dB < -45 dB
Time to Close or Open a Channel:		15 ms (typical)

a. 8.0 Adc @ 35 Vdc; 3.5 Adc @ 40 Vdc; 1.5 Adc @ 50 Vdc; 0.8 Adc @ 70 Vdc; 0.3 Adc @ 150 Vdc.

Artisan Technology Group - Quality Instrumentation ... Guaranteed | (888) 88-SOURCE | www.artisantg.com

Notes:

Artisan Technology Group - Quality Instrumentation ... Guaranteed | (888) 88-SOURCE | www.artisantg.com

Appendix B
Relay Life

Replacement Strategy

Electromechanical relays are subject to normal wear-out. Relay life depends on several factors as shown below. The recommended repair strategy for the E8480A switch module is PCA-level replacement. User repairs to the E8480A module are limited to replacement of the entire circuit board (P/N E8480-60001) when any of the relay fails or the end of relay life approaches. However, the sensitivity of the application should be weighed against the cost of replacing the entire circuit board with some useful life remaining. For more information, contact Agilent Technologies (see page 10).

NOTE *Relays that wear out normally or fail due to misuse should not be considered defective and are not covered by the product's warranty.*

Relay Life Factors

Some effects of loading and switching frequency on relay life follow.

- **Relay Load.** In general, higher power switching reduces relay life. In addition, capacitive/inductive loads and high inrush currents (for example, turning on a lamp or starting a motor) reduces relay life. *Exceeding specified maximum inputs can cause catastrophic failure.*

- **Switching Frequency.** Relay contacts heat up when switched. As the switching frequency increases, the contacts have less time to dissipate heat. The resulting increase in contact temperature also reduces relay life.

End-of-Life Determination

A preventive maintenance routine can prevent problems caused by unexpected relay failure. The end of the life of the relay can be determined by using one or more of the three methods described below. The best method (or combination of methods), as well as the failure criteria, depends on the application in which the relay is used.

- **Contact Resistance Maximum Value.** As the relay begins to wear out, its contact resistance increases. When the resistance exceeds a predetermined value, the relay should be replaced.

Artisan Technology Group - Quality Instrumentation ... Guaranteed | (888) 88-SOURCE | www.artisantg.com

- **Contact Resistance Variance.** The stability of the contact resistance decreases with age. Using this method, the contact resistance is measured several (5-10) times, and the variance of the measurements is determined. An increase in the variance indicates deteriorating performance.

- **Number of Relay Operations.** Relays can be replaced after a predetermined number of contact closures. However, this method requires knowledge of the applied load and life specifications for the applied load.

Artisan Technology Group - Quality Instrumentation ... Guaranteed | (888) 88-SOURCE | www.artisantg.com

Manual Part Number: E8480-90010
Printed in U.S.A. E0912

Agilent Technologies

Artisan Technology Group - Quality Instrumentation ... Guaranteed | (888) 88-SOURCE | www.artisantg.com

Artisan Technology Group - Quality Instrumentation ... Guaranteed | (888) 88-SOURCE | www.artisantg.com

Artisan Technology Group

Artisan Technology Group is your source for quality new and certified-used/pre-owned equipment

- FAST SHIPPING AND DELIVERY
- TENS OF THOUSANDS OF IN-STOCK ITEMS
- EQUIPMENT DEMOS
- HUNDREDS OF MANUFACTURERS SUPPORTED
- LEASING/MONTHLY RENTALS
- ITAR CERTIFIED SECURE ASSET SOLUTIONS

SERVICE CENTER REPAIRS
Experienced engineers and technicians on staff at our full-service, in-house repair center

InstraView℠ REMOTE INSPECTION
Remotely inspect equipment before purchasing with our interactive website at ***www.instraview.com*** ↗

WE BUY USED EQUIPMENT
Sell your excess, underutilized, and idle used equipment
We also offer credit for buy-backs and trade-ins
www.artisantg.com/WeBuyEquipment ↗

LOOKING FOR MORE INFORMATION?
Visit us on the web at ***www.artisantg.com*** ↗ for more information on price quotations, drivers, technical specifications, manuals, and documentation

Contact us: (888) 88-SOURCE | sales@artisantg.com | www.artisantg.com