General Service

2 and 3 Way Miniature Solenoid Valves

10-32 UNF Porting, In-line Porting

ASCO SCIENTIFIC®

The Series AL Valves are suitable for a wide range of OEM applications where small size, low power and long life are a must.

- Cycle life in the hundreds of millions.
- Corrosion resistant materials of construction.
- In-line porting for use with standard metal or plastic #10-32 UNF fittings.
- Magnetic latching construction available to maintain valve position with loss of power, eliminate coil heat rise and extend battery life.

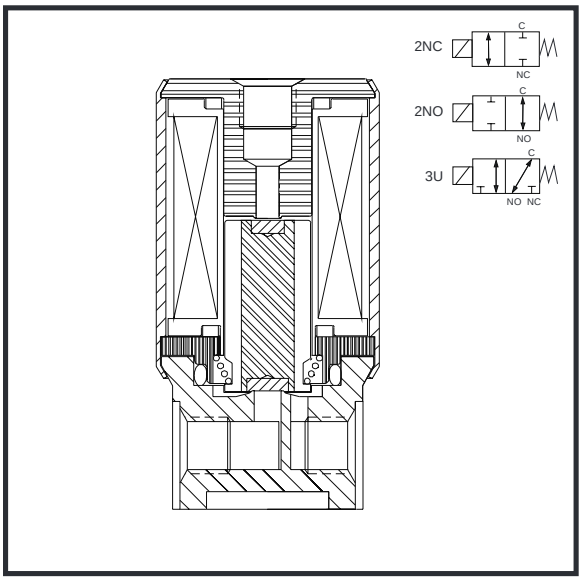

Construction

Valve Parts in Contact with Fluids	
Body	POM or 300 Series Stainless Steel
Disc	FKM
Gaskets	FKM
Bobbin/Core Tube	PBT
Core and Plugnut	400 Series Stainless Steel
Springs	300 Series Stainless Steel

Electrical

Standard Voltages	6, 12, 24 VDC+ 10%, -5% 115 VAC (with rectifier in lead wires)
Power Consumption	0.65-2.0 Watts (10 watts for latching version)
Duty Cycle Rating	Continuous (Intermittent for latching version)
Coil Insulation	266°F (130°C)
Electrical Connection	26 gage lead wire

Valve

Response Time	~5 ms at rated voltage (2 watt coil) ~12 ms at rated voltage (0.65 watt coil)
Internal Volume	2 Way NC = 330 µL, 2 Way NO = 310 µL, 3 Way = 370 µL
Mounting Bracket	Optional mounting clip, pin 5188-02 (see drawing)
Options	Oxygen service construction available Lubricant free construction available

Alternative Constructions

Many alternative constructions are available and include a variety of voltages, electrical connectors and materials of construction. ASCO Scientific can also custom design a valve for your specific application.

Contact your local ASCO sales office for more information.

Temperature Range:

Ambient & Media:

32°F to 77°F (0°C to 25°C) continuous duty
up to 104°F (40°C) intermittent duty

Approvals:

Meets applicable CE directives.

ASCO SCIENTIFIC®

Specificatons

Ports	Orifice Size (ins.)	Cv Flow Factor	Maximum Pressure (psi)	Catalog Number	Watt Rating @ 20°C	Weight (oz.)
2 WAY NORMALLY CLOSED (Closed when de-energized)						
#10-32 UNF	0.025	0.015	110	AL11xx	0.65	1.3
#10-32 UNF	0.055	0.038	50	AL21xx	0.65	1.3
#10-32 UNF	0.055	0.038	100	AL31xx	2.0	1.3
#10-32 UNF	0.090	0.07	30	AL41xx	2.0	1.3
2 WAY NORMALLY OPEN (Open when de-energized)						
#10-32 UNF	0.025	0.013	110	AL12xx	0.65	1.3
#10-32 UNF	0.048	0.033	50	AL22xx	0.65	1.3
#10-32 UNF	0.048	0.033	100	AL32xx	2.0	1.3
#10-32 UNF	0.078	0.06	30	AL42xx	2.0	1.3
3 WAY UNIVERSAL OPERATION (Pressure at any port)						
#10-32 UNF	0.025/0.025	0.015/0.013	110	AL13xx	0.65	1.3
#10-32 UNF	0.055/0.048	0.038/0.033	50	AL23xx	0.65	1.3
#10-32 UNF	0.055/0.048	0.038/0.033	100	AL33xx	2.0	1.3
#10-32 UNF	0.090/0.078	0.07/0.06	30	AL43xx	2.0	1.3
2 WAY LATCHING						
#10-32 UNF	0.025	0.015	110	AL11xxL	10*	1.8
#10-32 UNF	0.055	0.038	100	AL31xxL	10*	1.8
#10-32 UNF	0.090	0.07	30	AL41xxL	10*	1.8
3 WAY LATCHING						
#10-32 UNF	0.025/0.025	0.015/0.013	110	AL13xxL	10*	1.8
#10-32 UNF	0.055/0.048	0.038/0.033	100	AL33xxL	10*	1.8
#10-32 UNF	0.090/0.078	0.07/0.06	30	AL43xxL	10*	1.8

Notes
"xx" Denotes place in catalog number for voltage, three characters may be used when required.
* Latching valves are designed for intermittent duty only. Wattage rating applies to 20 □30 ms duration required to actuate valve. Once switched no additional power is required to hold the valve in its position.

Catalog Number Description and Options

AL33	xx	L	O	S
Base Catalog Number	Voltage - 06 (DC) - 12 (DC) - 24 (DC) - 115 (AC)	Latching Suffix	Options Suffix A = AC service (rectifier in lead wire) O = No Lubricant K = Oxygen Service Construction PBT Valve Body, FKM Seals, PFPE lubricant	Optional Body Material S = 300 Series Stainless Steel

To Construct Catalog Number

- □ Select base catalog number
- □ Insert voltage into the 5th, 6th, (and 7th when required), digits denoted by □xx□
- □ Add suffix for optional features to end of base catalog number

Examples

AL1124 = 2 Way Normally Closed valve with 0.025" orifice, 110 psig max pressure rating, and 24 VDC coil rated at 0.65 watts.
AL32115A = 2 Way Normally Open valve with 0.048" orifice, 100 psig max pressure rating, and 115 VAC coil with rectifier.
AL4306LK = 3 Way Latching valve with 0.090" and 0.078" orifices, 30 psig max pressure rating, 6 VDC coil and suitable for oxygen service.

ASCO SCIENTIFIC®

Dimensions 2 and 3 way Standard Solenoid: Inches [mm]

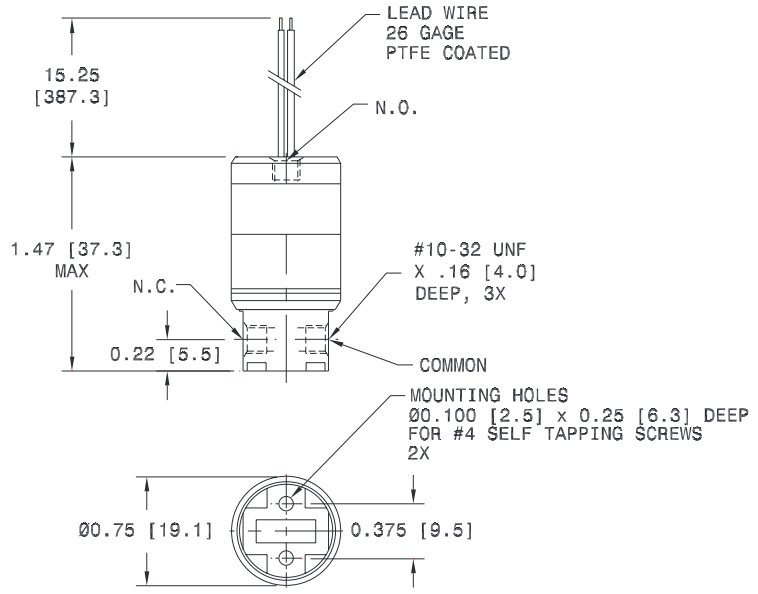

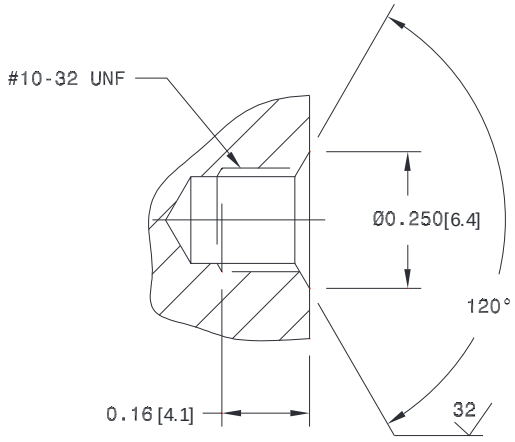

PORT DIMENSIONS

Dimensions 2 and 3 way Latching Solenoid: Inches [mm]

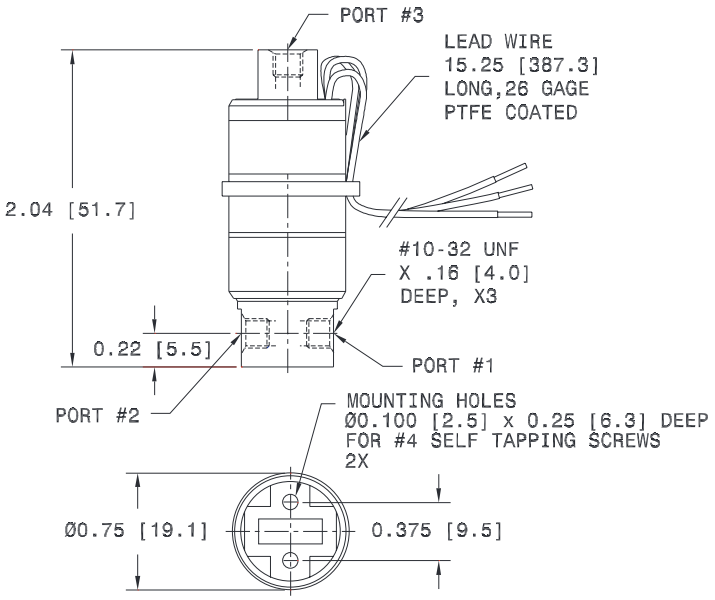

Latching Wiring Diagram

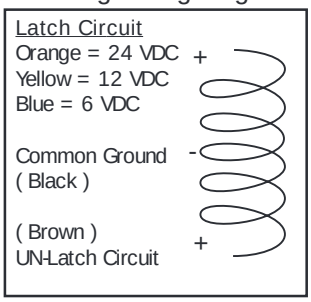

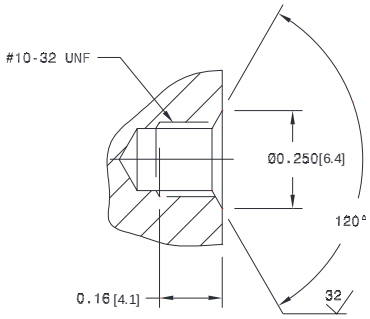

PORT DIMENSIONS