Artisan Technology Group

Artisan Technology Group is your source for quality new and certified-used/pre-owned equipment

- FAST SHIPPING AND DELIVERY
- TENS OF THOUSANDS OF IN-STOCK ITEMS
- EQUIPMENT DEMOS
- HUNDREDS OF MANUFACTURERS SUPPORTED
- LEASING/MONTHLY RENTALS
- ITAR CERTIFIED SECURE ASSET SOLUTIONS

SERVICE CENTER REPAIRS
Experienced engineers and technicians on staff at our full-service, in-house repair center

InstraView℠ REMOTE INSPECTION
Remotely inspect equipment before purchasing with our interactive website at ***www.instraview.com*** ↗

WE BUY USED EQUIPMENT
Sell your excess, underutilized, and idle used equipment
We also offer credit for buy-backs and trade-ins
www.artisantg.com/WeBuyEquipment ↗

LOOKING FOR MORE INFORMATION?
Visit us on the web at ***www.artisantg.com*** ↗ for more information on price quotations, drivers, technical specifications, manuals, and documentation

Contact us: (888) 88-SOURCE | sales@artisantg.com | www.artisantg.com

DATEL®
INNOVATION and EXCELLENCE

DVME-626
16-Bit, 6-Channel VMEbus D/A Board Board

FEATURES

- 6 D/A channels
- 16-Bit resolution
- 14-Bit monotonicity
- Designed to meet precision servo control requirements
- Complete hardware-compatible with VMEbus specifications
- 25 µseconds settling time
- Available in two models:
  DVME-626V1 for ±10V dc output
  DVME-626V2 for 0 to +10V dc and ±5V dc outputs
- Three input coding types:
  A. Bipolar 2's complement
  B. Bipolar offset binary
  C. Unipolar straight binary
- Up to 0.005% full-scale range accuracy
- ±0.005% of full-scale range differential nonlinearity
- On-board dc-to-dc power converter supplies ±15V dc for internal logic circuits

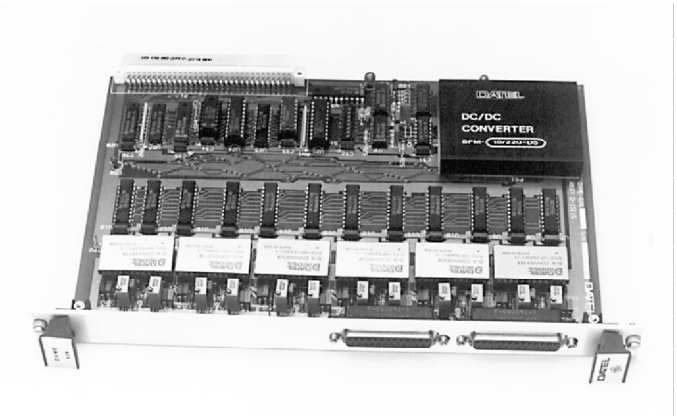

The DVME-626 is DATEL's high resolution VMEbus-based D/A board that provides analog outputs for up to 6 channels. The 16-bit D/A board is designed to deliver exceptionally high-performance in rugged industrial environments. The 14-bit monotonicity and 0.005% FSR accuracy makes the board an ideal choice for precision servo control and simliar applications. The DVME-626 is supported by MS-DOS software for calibration and diagnostics.

GENERAL DESCRIPTION

The DVME-626 is a D/A member of DATEL's VMEbus family. The board delivers precision and performance that makes it easily acceptable for various test and control applications. On-board hardware resources provide 6 high-resolution analog outputs with an accuracy of better than 0.005% of full-scale range. The DVME-626 accepts 16-bit digital data, coded in bipolar 2's complement, bipolar offset binary, or unipolar straight binary. The board is rigorously tested under extreme environmental conditions to meet DATEL's stringent quality assurance requirements.

The DVME-626 easily fits into a VMEbus card cage and is addressable using short I/O space address lines. The on-board switches select the base address of the board. Functions relating to input data coding and output voltage range are easily selectable using jumpers.

Functionally, the DVME-626 consists of a VMEbus interface section and a digital-to-analog converter (DAC) section. The DAC data register section contains a data register and D/A converter for each section. One unique feature of the DVME-626 is that the DAC outputs will reset to 0.000V during reset, regardless of whether unipolar or bipolar outputs are selected. Figure 1 shows the functional block diagram of the board.

The DVME-626 D/A board will be shipped with a user's manual. The user's manual describes the installation and calibration procedures for different applications and explains the theory of operation of the board. The user's manual also contains information on troubleshooting the board.

The board is shipped with an example 68010 assembly language diagnostic program on a 5 1/4" floppy diskette, formatted for the MS-DOS operating systems. Consult the factory regarding the availability of the diagnostic program's source code on other disk formats.

ORDERING INFORMATION

DVME-626V
- 1 — ± 10V dc output range
- 2 — 0 to 10V and ±5V dc output ranges

DATEL, Inc., 11 Cabot Boulevard, Mansfield, MA 02048-1151 (U.S.A.) • Tel: (508) 339-3000 Fax: (508) 339-6356 • For immediate assistance (800) 233-2765
Artisan Technology Group - Quality Instrumentation ... Guaranteed | (888) 88-SOURCE | www.artisantg.com

VMEbus Interface

The DVME-626 interfaces to the host system using the P1 connector. The board uses short I/O space address lines and 16 data lines. On-board switches select the base address of the board. The board responds to address modifier codes 29H, 2DH, 39H, and 3DH for data output purposes. The DVME-626 generates the data acknowledge (DTACK ★) signal to notify acceptance of data from the VMEbus data lines, D00 through D15. The DTACK ★ signal is jumper-selectable for delay times from 125 nanoseconds to 1000 nanoseconds, accommodating different host CPU response times.

The interface logic decodes the VMEbus control lines WRITE ★, DS0 ★, DS1 ★, and SYSRESET ★ to select and control the interface. These signals control the board select and the VMEbus transfer functions. The DVME-626 uses programmable array logic (PAL) devices for interface and control, guaranteeing true asynchronous operation.

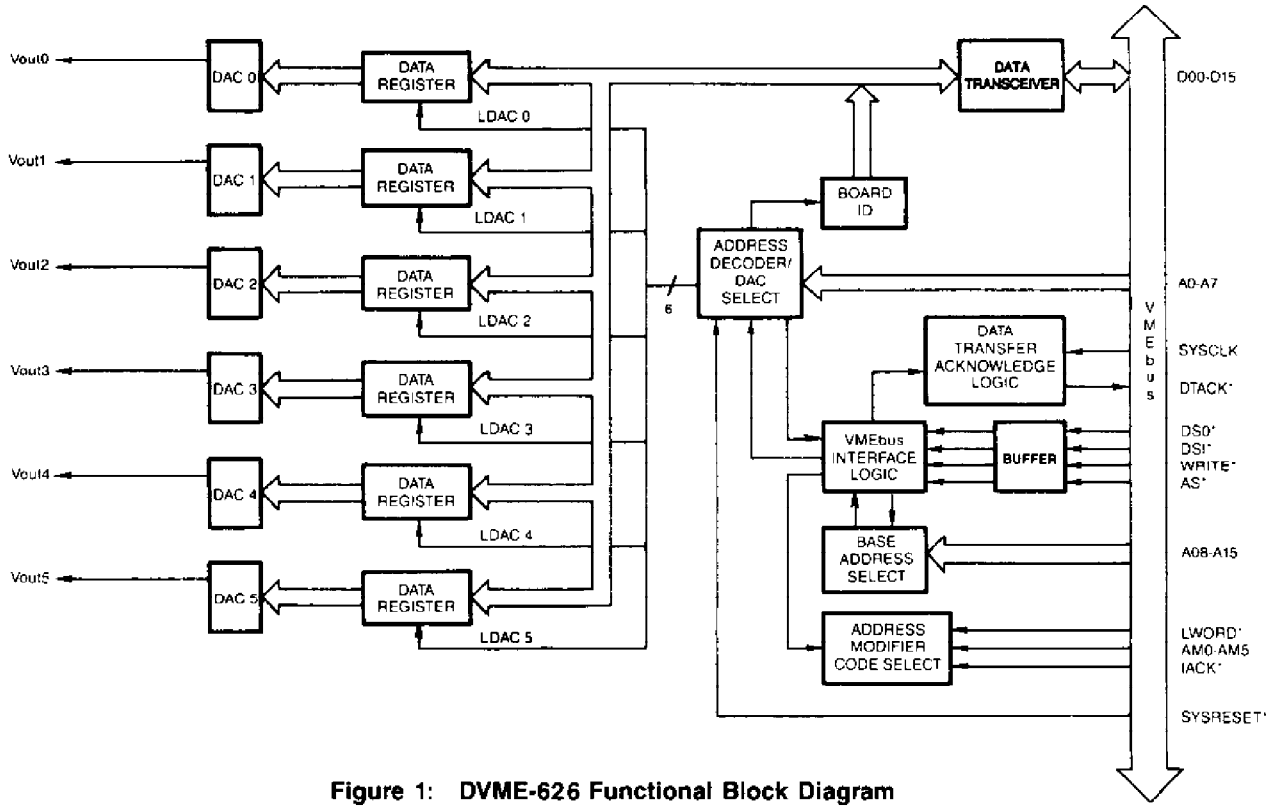

Figure 1: DVME-626 Functional Block Diagram

FUNCTIONAL SPECIFICATIONS

(Typical at 25 degrees Celcius, unless otherwise noted)

INTERFACE SPECIFICATIONS

Data Bus . . . . . 16 Bits (A16:D16 slave)

Address Bus . . . . . Short I/O Space; 16 address lines

Address Modifier Codes . . . . . Codes used 29H, 2DH, 39H, and 3DH

Memory Mapping . . . . . Short I/O space, user or supervisor, 256 words allocated per board.

Data Transfer . . . . . DTACK ★ signal line. Acknowledges the VMEbus host that data has been placed or accepted from the VMEbus data lines.

CONNECTOR SPECIFICATIONS

VMEbus P1 Connector . . . . . 96-pin male DIN connector.

J1 and J2 Analog Output Connectors . . . . . 25-pin D-type female connector, DB-25S

ANALOG SPECIFICATONS

ANALOG OUTPUT

Number of Channels . . . . . 6, non-isolated

Output Range
DVME-626V1 . . . . . ±10V dc
DVME-626V2 . . . . . 0 to 10V and ± 5V dc

Digital Input Coding . . . . . Bipolar 2's complement
Bipolar offset binary
Unipolar straight binary
(jumperable)

Note: The VMEbus SYSCLK signal is required.

Artisan Technology Group - Quality Instrumentation ... Guaranteed | (888) 88-SOURCE | www.artisantg.com

Resolution . . . . . 16 Bits

Monotonicity . . . . . 14 bits

Reset . . . . . Output resets to 0.000V dc at power-on

Accuracy . . . . . 0.005% of FSR, minimum

Differential nonlinearity . . . . . 0.005% of FSR, maximum

Zero temperature drift . . . . . 5 ppm/°C, typical

Offset temperature drift . . . . . 8 ppm/°C, typical

Gain temperature drift . . . . . 20 ppm/°C, typical

Settling time . . . . . **25 µseconds (small step)**

Output current . . . . . ±5 mA, typical

Output impedance . . . . . 50 milliohms, typical

POWER SUPPLY REQUIREMENTS

+5V dc ±0.5% at 3.0 Amperes, typical

Power Supply Rejection . . . . . ±0.002%, typical

PHYSICAL CHARACTERISTICS

Outline Dimensions . . . . . 9.19″ W×6.3″ D×0.6″ H (233.35×160×15.24 mm)

Weight . . . . . 1 lb. (453.6 grams)

Operating Temperature Range . . . . . 0 to +60° C Range

Storage Temperature Range . . . . . −20 to +80° C Range

Humidity . . . . . 0 to 90%, non-condensing

DVME-626 PROGRAMMING INFORMATION

The DVME-626 contains six programmable registers that store digital data for each 16-bit D/A converter. The board responds only to word data transfers on write operations. Table 1 shows the addresses of the identification code and the registers. Figure 2 shows the format of the DAC data register.

Table 1: DVME-626 Register Locations.

ADDRESS	FUNCTION	CONTENTS
Base + 0 through Base + 63	Read	Manufacturer's/Board's identification code
Base + 160	Write	D/A Channel 0
Base + 162	Write	D/A Channel 1
Base + 164	Write	D/A Channel 2
Base + 166	Write	D/A Channel 3
Base + 168	Write	D/A Channel 4
Base + 170	Write	D/A Channel 5

Word Address: Base + 160, Base+162, Base+164, Base+166, Base + 168, and Base + 170

15	14	13	12	11	10	9	8	7	6	5	4	3	2	1	0
DA1	DA2	DA3	DA4	DA5	DA6	DA7	DA8	DA9	DA10	DA11	DA12	DA13	DA14	DA15	DA16
MSB															LSB

Figure 2: DVME-626 DAC Data Register Format

I/O CONNECTIONS

The DVME-626 D/A boards provide front panel J1 and J2 connectors for analog output connections. Tables 2 and 3 list the output signals of the J1 and J2 connectors respectively.

Table 2: DVME-626 ANALOG OUTPUT CONNECTOR J1

PIN #	DESCRIPTION
1	DAC 0 V OUT
2	NO CONNECTION
3	NO CONNECTION
4	DAC 1 V OUT
5	NO CONNECTION
6	NO CONNECTION
7	DAC 2 V OUT
8	NO CONNECTION
9	NO CONNECTION
10	DAC 3 V OUT
11	NO CONNECTION
12	NO CONNECTION
13	NO CONNECTION
14	DAC 0 ANALOG RETURN
15	DAC 0 ANALOG RETURN
16	NO CONNECTION
17	DAC 1 ANALOG RETURN
18	DAC 1 ANALOG RETURN
19	NO CONNECTION
20	DAC 2 ANALOG RETURN
21	DAC 2 ANALOG RETURN
22	NO CONNECTION
23	DAC 3 ANALOG RETURN
24	DAC 3 ANALOG RETURN
25	NO CONNECTION

Artisan Technology Group - Quality Instrumentation ... Guaranteed | (888) 88-SOURCE | www.artisantg.com

Table 3: DVME-626 ANALOG OUTPUT CONNECTOR J2

PIN #	DESCRIPTION
1	DAC 4 V OUT
2	NO CONNECTION
3	NO CONNECTION
4	DAC 5 V OUT
5	NO CONNECTION
6	NO CONNECTION
7	NO CONNECTION
8	NO CONNECTION
9	NO CONNECTION
10	NO CONNECTION
11	NO CONNECTION
12	NO CONNECTION
13	NO CONNECTION
14	DAC 4 ANALOG RETURN
15	DAC 4 ANALOG RETURN
16	NO CONNECTION
17	DAC 5 ANALOG RETURN
18	DAC 5 ANALOG RETURN
19	NO CONNECTION
20	NO CONNECTION
21	NO CONNECTION
22	NO CONNECTION
23	NO CONNECTION
24	NO CONNECTION
25	NO CONNECTION

DVME-626 Board Identification Code

Byte Address	ASCII Code	FUNCTION
Base + 1 Base + 3 Base + 5 Base + 7 Base + 9	V M E I D	Identifier. This ASCII code is present for all DATEL VMEbus boards
Base + 0B Base + 0D Base + 0F	D A T	Manufacturer ID. DAT is the ID for DATEL
Base + 11 Base + 13 Base + 15 Base + 17 Base + 19 Base + 1B Base + 1D Base + 1F	d V M E - 6 2 6	Board model number

DATEL VMEbus Short I/O Memory Organization

Base Address	Board Model Number	Function
Base+0 through Base+63	All DATEL VMEbus boards	Manufacturer's and Board's identification code
Base+64 through Base+77	DVME-660	48 line digital I/O board
Base+78 through Base+127	----------	Not Used ----------
Base+128 through Base+143	DVME-611	DVME-611: 32 single-ended/ 16 differential channel A/D board
	DVME-612	DVME-612: 32 single-ended/ 16 differential channel A/D board with 2 D/A channels
Base+144 through Base+151	DVME-602	DVME-602: 4-channel isolated board for measuring thermocouples, RTD's, strain gage, high-level, low-level, and 4-to-20 mA current loop inputs
Base+152 through Base+159	----------	Not Used ----------
Base+160 through Base+175	DVME-612	DVME-612: 32 single-ended/ 16 differential channel A/D board with 2 D/A channels
	DVME-624	DVME-624: 4-channel isolated board
	DVME-626	DVME-626: 6-channel 16-bit D/A board
	DVME-628	DVME-628: 8-channel 12-bit D/A board
Base+176 through Base+191	----------	Not Used ----------
Base+192 through Base+255	----------	Not Used ----------

DATEL, Inc. 11 Cabot Boulevard, Mansfield, MA 02048-1151
Tel: (508) 339-3000 / Fax: (508) 339-6356
For immediate assistance: (800) 233-2765

DATEL (UK) LTD. Tadley, England Tel: (01256)-880444
DATEL S.A.R.L. Montigny Le Bretonneux, France Tel: 1-34-60-01-01
DATEL GmbH Munchen, Germany Tel: 89-544334-0
DATEL KK Tokyo, Japan Tel: 3-3779-1031, Osaka Tel: 6-354-2025

DATEL makes no representation that the use of its products in the circuits described herein, or the use of other technical information contained herein, will not infringe upon existing or future patent rights. The descriptions contained herein do not imply the granting of licenses to make, use, or sell equipment constructed in accordance therewith. Specifications are subject to change without notice. The DATEL logo is a registered DATEL, Inc. trademark.

Artisan Technology Group - Quality Instrumentation ... Guaranteed | (888) 88-SOURCE | www.artisantg.com

Artisan Technology Group

Artisan Technology Group is your source for quality new and certified-used/pre-owned equipment

- FAST SHIPPING AND DELIVERY
- TENS OF THOUSANDS OF IN-STOCK ITEMS
- EQUIPMENT DEMOS
- HUNDREDS OF MANUFACTURERS SUPPORTED
- LEASING/MONTHLY RENTALS
- ITAR CERTIFIED SECURE ASSET SOLUTIONS

SERVICE CENTER REPAIRS
Experienced engineers and technicians on staff at our full-service, in-house repair center

InstraView℠ REMOTE INSPECTION
Remotely inspect equipment before purchasing with our interactive website at ***www.instraview.com*** ↗

WE BUY USED EQUIPMENT
Sell your excess, underutilized, and idle used equipment
We also offer credit for buy-backs and trade-ins
www.artisantg.com/WeBuyEquipment ↗

LOOKING FOR MORE INFORMATION?
Visit us on the web at ***www.artisantg.com*** ↗ for more information on price quotations, drivers, technical specifications, manuals, and documentation

Contact us: (888) 88-SOURCE | sales@artisantg.com | www.artisantg.com