Artisan Technology Group

Artisan Technology Group is your source for quality new and certified-used/pre-owned equipment

- FAST SHIPPING AND DELIVERY
- TENS OF THOUSANDS OF IN-STOCK ITEMS
- EQUIPMENT DEMOS
- HUNDREDS OF MANUFACTURERS SUPPORTED
- LEASING/MONTHLY RENTALS
- ITAR CERTIFIED SECURE ASSET SOLUTIONS

SERVICE CENTER REPAIRS
Experienced engineers and technicians on staff at our full-service, in-house repair center

InstraView℠ REMOTE INSPECTION
Remotely inspect equipment before purchasing with our interactive website at ***www.instraview.com*** ↗

WE BUY USED EQUIPMENT
Sell your excess, underutilized, and idle used equipment
We also offer credit for buy-backs and trade-ins
www.artisantg.com/WeBuyEquipment ↗

LOOKING FOR MORE INFORMATION?
Visit us on the web at ***www.artisantg.com*** ↗ for more information on price quotations, drivers, technical specifications, manuals, and documentation

Contact us: (888) 88-SOURCE | sales@artisantg.com | www.artisantg.com

Artisan Scientific
QUALITY INSTRUMENTATION ... GUARANTEED

Looking for more information?

Visit us on the web at **http://www.artisan-scientific.com** for more information:

- Price Quotations
- Drivers
- Technical Specifications, Manuals and Documentation

Artisan Scientific is Your Source for Quality New and Certified-Used/Pre-owned Equipment

- Tens of Thousands of In-Stock Items
- Hundreds of Manufacturers Supported
- Fast Shipping and Delivery
- Leasing / Monthly Rentals
- Equipment Demos
- Consignment

Service Center Repairs

Experienced Engineers and Technicians on staff in our State-of-the-art Full-Service In-House Service Center Facility

InstraView™ Remote Inspection

Remotely inspect equipment before purchasing with our Innovative InstraView™ website at **http://www.instraview.com**

We buy used equipment! We also offer credit for Buy-Backs and Trade-Ins

Sell your excess, underutilized, and idle used equipment. Contact one of our Customer Service Representatives today!

Talk to a live person: 888-88-SOURCE (888-887-6872) | Contact us by email: sales@artisan-scientific.com | Visit our website: http://www.artisan-scientific.com

Artisan Technology Group - Quality Instrumentation ... Guaranteed | (888) 88-SOURCE | www.artisantg.com

D1000 SERIES USERS MANUAL

REVISED: 10/1/97

DGH CORPORATION
P. O. BOX 5638
MANCHESTER, NH 03108

TELEPHONE: 603-622-0452

FAX: 603-622-0487

URL: http://www.dghcorp.com

The information in this publication has been carefully checked and is believed to be accurate; however, no responsibility is assumed for possible inaccuracies or omissions. Applications information in this manual is intended as suggestions for possible use of the products and not as explicit performance in a specific application. Specifications may be subject to change without notice.

D1000 modules are not intrinsically safe devices and should not be used in an explosive environment unless enclosed in approved explosion-proof housings.

Artisan Scientific - Quality Instrumentation Guaranteed | (888) 88-SOURCE | www.artisan-sci.com

TABLE OF CONTENTS

Warranty **4**

CHAPTER 1 **Getting Started**
- Default Mode 1-1
- Quick Hook-Up 1-2

CHAPTER 2 **Functional Description**
- Block Diagram 2-4

CHAPTER 3 **Communications**
- Data Format 3-2
- RS-232 3-2
- Multi-party Connection 3-3
- Software Considerations 3-4
- Changing Baud Rate 3-5
- Using a Daisy-Chain With a Dumb Terminal 3-5
- RS-485 3-6
- RS-485 Multidrop System 3-8

CHAPTER 4 **Command Set**
- Table of Commands 4-6
- User Commands 4-7
- Error Messages 4-18

CHAPTER 5 **Setup Information and Command**
- Command Syntax 5-2
- Setup Hints 5-11

CHAPTER 6 **Digital I/O Function**
- Digital Outputs 6-1
- Digital Inputs 6-2
- Events Counter 6-3
- Alarm Outputs 6-4
- On-Off Controller 6-5
- Setpoint 6-9

CHAPTER 7 **Power Supply**

CHAPTER 8 **Troubleshooting**

CHAPTER 9 **Calibration**

Appendix A **(ASCII TABLE)**

Appendix B **D1600 Data Sheet**

Appendix C **D1400 Data Sheet**

Appendix D **D1500 Data Sheet**

Appendix E **D2000 Series**

Appendix F **Continuous Operation**

Appendix G **RTS Operation**

Appendix H **D1000/2000 Specifications**

Artisan Technology Group - Quality Instrumentation ... Guaranteed | (888) 88-SOURCE | www.artisantg.com

WARRANTY

DGH warrants each D1000 and D2000 series module to be free from defects in materials and workmanship under normal conditions of use and service and will replace any component found to be defective, on its return to DGH, transportation charges prepaid within one year of its original purchase. DGH assumes no liability, expressed or implied, beyond its obligation to replace any component involved. Such warranty is in lieu of all other warranties expressed or implied.

WARNING

The circuits and software contained in D1000 and D2000 series modules are proprietary. Purchase of these products does not transfer any rights or grant any license to the circuits or software used in these products. Disassembling or decompiling of the software program is explicitly prohibited. Reproduction of the software program by any means is illegal.

As explained in the setup section, all setups are performed entirely from the outside of the D1000 module. There is no need to open the module because there are no user-serviceable parts inside. Removing the cover or tampering with, modifying, or repairing by unauthorized personnel will automatically void the warranty. DGH is not responsible for any consequential damages.

RETURNS

When returning products for any reason, contact the factory and request a Return Authorization Number and shipping instructions. Write the Return Authorization Number on the outside of the shipping box. DGH strongly recommends that you insure the product for value prior to shipping. Items should not be returned collect as they will not be accepted.

Shipping Address:

DGH Corporation
Hillhaven Industrial Park
146 Londonderry Turnpike
Hooksett, NH 03106

Artisan Scientific - Quality Instrumentation Guaranteed | (888) 88-SOURCE | www.artisanscientific.com

Chapter 1
Getting Started

Default Mode

All D1000 modules contain an EEPROM (Electrically Erasable Programmable Read Only Memory) to store setup information and calibration constants. The EEPROM replaces the usual array of switches and pots necessary to specify baud rate, address, parity, etc. The memory is nonvolatile which means that the information is retained even if power is removed. No batteries are used so it is never necessary to open the module case.

The EEPROM provides tremendous system flexibility since all of the module's setup parameters may be configured remotely through the communications port without having to physically change switch and pot settings. There is one minor drawback in using EEPROM instead of switches; there is no visual indication of the setup information in the module. It is impossible to tell just by looking at the module what the baud rate, address, parity and other settings are. It is difficult to establish communications with a module whose address and baud rate are unknown. To overcome this, each module has an input pin labeled DEFAULT*. By connecting this pin to Ground, the module is put in a known communications setup called Default Mode.

The Default Mode setup is: 300 baud, one start bit, eight data bits, one stop bit, no parity, any address is recognized.

Grounding the DEFAULT* pin does not change any of the setups stored in EEPROM. The setup may be read back with the Read Setup (RS) command to determine all of the setups stored in the module. In Default Mode, all commands are available.

A module in Default Mode will respond to any address except the six identified illegal values (NULL, CR, $, #, {, }). A dummy address must be included in every command for proper responses. The ASCII value of the module address may be read back with the RS command. An easy way to determine the address character is to deliberately generate an error message. The error message outputs the module's address directly after the "?" prompt.

Setup information in a module may be changed at will with the SetUp (SU) command. Baud rate and parity setups may be changed without affecting the Default values of 300 baud and no parity. When the DEFAULT* pin is released, the module automatically performs a program reset and configures itself to the baud rate and parity stored in the setup information.

The Default Mode is intended to be used with a single module connected to a terminal or computer for the purpose of identifying and modifying setup

Artisan Technology Group - Quality Instrumentation ... Guaranteed | (888) 88-SOURCE | www.artisantg.com

values. In most cases, a module in Default Mode may not be used in a string with other modules.

RS-232 & RS-485 Quick Hook-Up

Software is not required to begin using your D1000 module. We recommend that you begin to get familiar with the module by setting it up on the bench. Start by using a dumb terminal or a computer that acts like a dumb terminal. Make the connections shown in the quick hook-up drawings, Figures 1.1 or 1.2. Put the module in the default mode by grounding the Default* terminal. Initialize the terminal communications package on your computer to put it into the “terminal” mode. Since this step varies from computer to computer, refer to your computer manual for instructions.

Begin by typing $1RD and pressing the Enter or Return key. The module will respond with an * followed by the data reading at the input. The data includes sign, seven digits and a decimal point. For example, if you are using a thermocouple module and measuring room temperature your reading might be *+00025.00. The temperature reading will initially be in °C which has been preset at the factory. Once you have a response from the module you can turn to the Chapter 4 and get familiar with the command set.

All modules are shipped from the factory with a setup that includes a channel address of 1, 300 baud rate, no linefeeds, no parity, alarms off, no echo and two-character delay. Refer to the Chapter 5 to configure the module to your application.

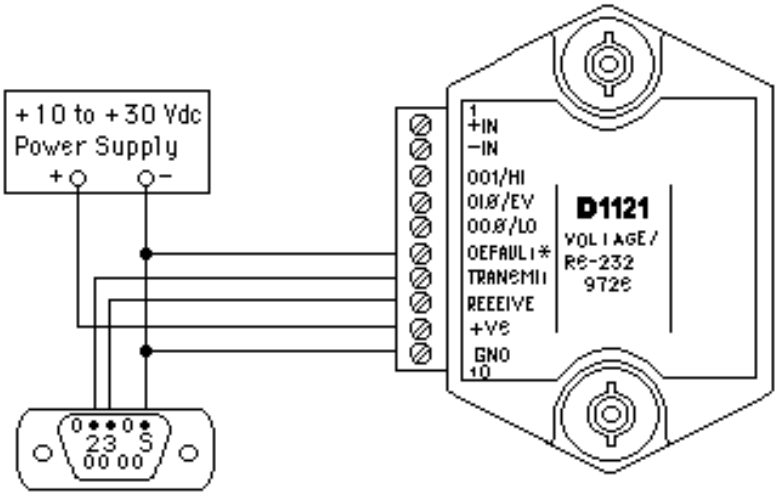

Note: If using a DB-25 connector ground is tied to pin 7. Pin 3 is tied to TRANSMIT and pin 2 is tied to RECEIVE on the module.

Figure 1.1 RS-232C Quick Hook-Up.

Artisan Technology Group - Quality Instrumentation ... Guaranteed | (888) 88-SOURCE | www.artisantg.com

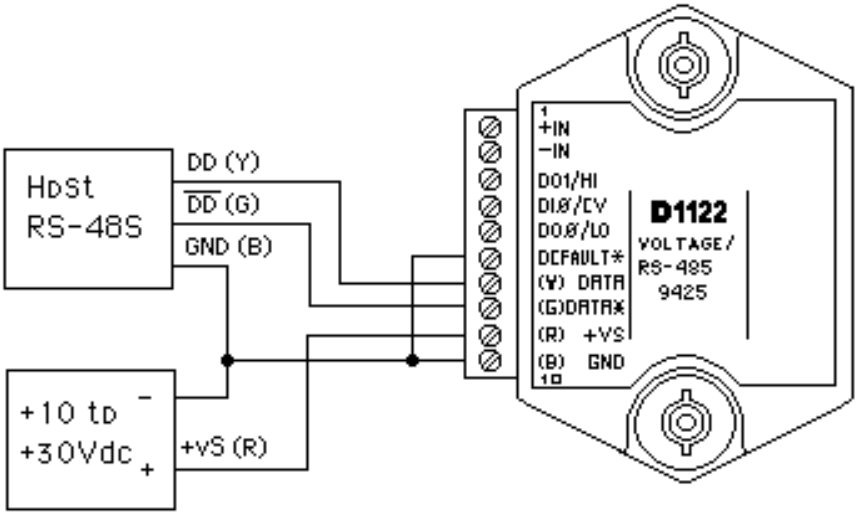

Figure 1.2 RS-485 Quick Hook-Up.

RS-485 Quick Hook-up to a RS-232 port

An RS-485 module may be easily interfaced to an RS-232C terminal for evaluation purposes. This connection is only suitable for benchtop operation and should never be used for a permanent installation. Figure 1.3 shows the hook-up. This connection will work provided the RS-232C transmit output is current limited to less than 50mA and the RS-232C receive threshold is greater than 0V. All terminals that use 1488 and 1489 style interface IC's will satisfy this requirement. With this connection, characters generated by the terminal will be echoed back. To avoid double characters, the local echo on the terminal should be turned off.

If the current limiting capability of the RS-232C output is uncertain, insert a 100Ω to 1kΩ resistor in series with the RS-232 output.

In some rare cases it may be necessary to connect the module's DATA pin to ground through a 100Ω to 1kΩ resistor.

Artisan Technology Group - Quality Instrumentation ... Guaranteed | (888) 88-SOURCE | www.artisantg.com

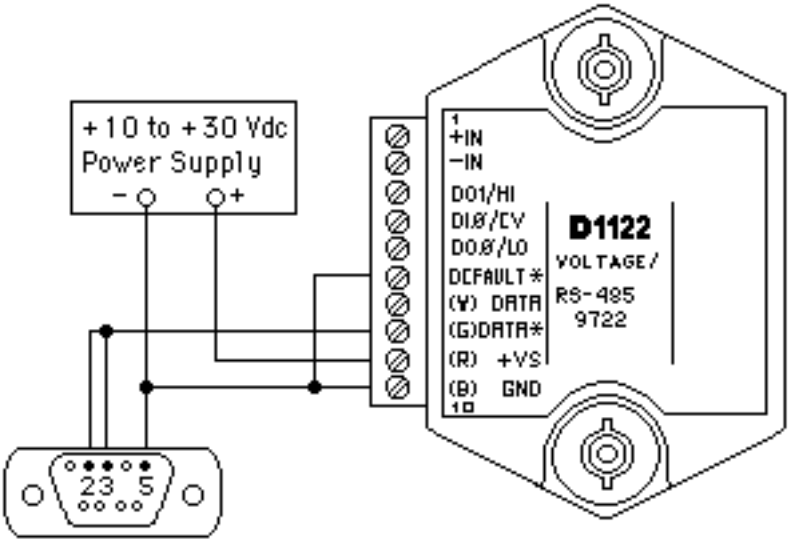

Note: If using a DB-25 connector ground is tied to pin 7.

Figure 1.3 RS-485 Quick Hook-Up with RS-232C Port.

Artisan Technology Group - Quality Instrumentation ... Guaranteed | (888) 88-SOURCE | www.artisantg.com

Chapter 2
Functional Description

A functional diagram of a typical module is shown in Figure 2.1. It is a useful reference that shows the data path in the module and to explain the function of many of the module's commands.

The first step is to acquire the sensor signal and convert it to digital data. In Figure 2.1, all the signal conditioning circuitry has been lumped into one block, the analog/digital converter (A/D). Autozero and autocalibration is performed internally and is transparent to the user.

The full-scale output of the A/D converter may be trimmed using the Trim Span (TS) command. The TS command adjusts calibration values stored internally in the EEPROM. The TS command should only be used to trim the accuracy of the unit with a laboratory standard reference applied to the sensor input.

The trimmed data flows into either of two digital filters. The filter selection is performed automatically by the microprocessor after every A/D conversion. The filter selection depends on the difference of the current A/D output data and the previous data stored in the output data register. If the least significant decimal digit from the A/D differs from the old output data by more than 10 counts, the large signal filter is selected. If the change is less than 10 counts, the small signal filter is used.

The two-filter system allows for different degrees of filtering depending on the rate of the input change. For steady-state signals, the small-signal filter averages out noise and small input changes to give a stable steady-state output. The large-signal filter is activated by step changes or very noisy input signals. The time constants for the two filters can be specified independently with the SetUp (SU) command. The filter values are stored in nonvolatile memory. Typically, the small-signal filter is set to a larger time constant than the large-signal filter. This gives very good noise rejection along with fast response to step inputs.

The modules allow user selectable output scaling in °C or °F on temperature data. This selection is shown in Figure 2.1 as a switch following the digital filters. The default scaling in the modules is °C, but this may be converted to °F by feeding the data through a conversion routine. The switch position is controlled by a bit in the setup data and may be changed with the SetUp (SU) command. The scaling selection is nonvolatile. In non-temperature applications, °C should always be selected.

The scaled data is summed with data stored in the Output Offset Register to obtain the final output value. The output offset is controlled by the user and has many purposes. The data in the Output Offset Register may be used to trim any offsets caused by the input sensor. It may be used to null out

Artisan Technology Group - Quality Instrumentation ... Guaranteed | (888) 88-SOURCE | www.artisantg.com

undesired signal such as a tare weight. The Trim Zero (TZ) command is used to adjust the output to any desired value by loading the appropriate value in the offset register. The offset register data is nonvolatile.

The output offset may also be modified using the Set Point (SP) command. The data value specified by the SP command is multiplied by -1 before being loaded into the register. The Set Point command specifies a null value that is subtracted from the input data. The output reading becomes a deviation value from the downloaded setpoint. This feature is very useful in on-off controllers as described in Chapter 6 of this manual.

The value stored in the offset register may be read back using the Read Zero (RZ) command. Data loaded in with the SP command will be read back with the sign changed. The output register may be reset to zero with the Clear Zero (CZ) command.

The output data may be read with the Read Data (RD) command. In some cases when a computer is used as a host, the same data value may be read back several times before it is updated with a new A/D conversion. To guarantee that the same data is not read more than once, the New Data (ND) command is used. Each time an RD or ND command is performed, the New Data Flag is cleared. The flag is set each time the output data register is loaded as the result of a new A/D conversion. The ND command waits until the flag is set before it outputs the data reading.

The remainder of Figure 2.1 shows several functions: a versatile alarm function, an event counter and general-purpose digital inputs and outputs. These functions are described in detail in Chapter 6.

The alarm section consists of two registers that are used to store high and low alarm limit values. These registers may be down-loaded with data values by using the HI and LO alarm commands. The alarm values are loaded with the same data format that is used with the output data. The high and low alarm registers are nonvolatile so they will not be lost when the unit is powered down. The values held in the alarm registers may be read back at any time with the Read High (RH) and Read Low (RL) commands.

The data held in the alarm registers is continually compared with the calculated output data. The result of the comparison is used to trip alarms that may be used as control outputs. The high alarm is turned on when the output data exceeds the high limit value. The low alarm is activated if the output data is less than the low alarm value. Each alarm has two user selectable modes, either Momentary (M) or Latching (L). Momentary alarms are activated only while the alarm condition is met; if the output data returns within limits, the alarm is turned off. Conversely, when latching alarms are activated, they remain on even if the output data returns within limits.

Artisan Technology Group - Quality Instrumentation ... Guaranteed | (888) 88-SOURCE | www.artisantg.com

Latching alarms are turned off with the Clear Alarms (CA) command or if the opposite alarm limit is exceeded.

The state of the alarms may be read with the Digital Input (DI) command. Also, the alarm outputs may be used to activate digital outputs on the module to turn on alarms or to perform simple control functions. The alarm outputs are shared with the general purpose digital output bits DO0 and DO1. To connect the alarm outputs to the module connector, the Enable Alarm (EA) command is used. The connector pins may be switched back to the general-purpose digital outputs using the Disable Alarms (DA) command. The EA/DA selection is nonvolatile.

The general-purpose digital outputs are open-collector transistor switches that may be controlled by the host with the Digital Output (DO) command. They are designed to activate external solid-state relays to control AC or DC power circuits. The output may also be used to interface to other logic-level devices. The number of digital outputs available depends on the module type.

The Digital Input (DI) command is used to sense the logic levels on the digital input pins DI0-DI7. The digital inputs are used to read logic levels generated by other devices. They are also useful to sense the state of electro-mechanical limit switches. The number of digital inputs available varies with the module type.

The DI0 input is shared with the input to the Event Counter. The Event Counter accumulates the number of positive transitions that occur on the DI0/EV connector pin. The counter can accumulate up to 9999999 (decimal) events and may be read with the Read Events (RE) command. The counter input is filtered and uses a Schmitt-trigger input to provide a bounce-free input for mechanical switches. The counter value may be zeroed with the Clear Events (CE) command or the write-protected Events Clear (EC) command.

Artisan Technology Group - Quality Instrumentation ... Guaranteed | (888) 88-SOURCE | www.artisantg.com

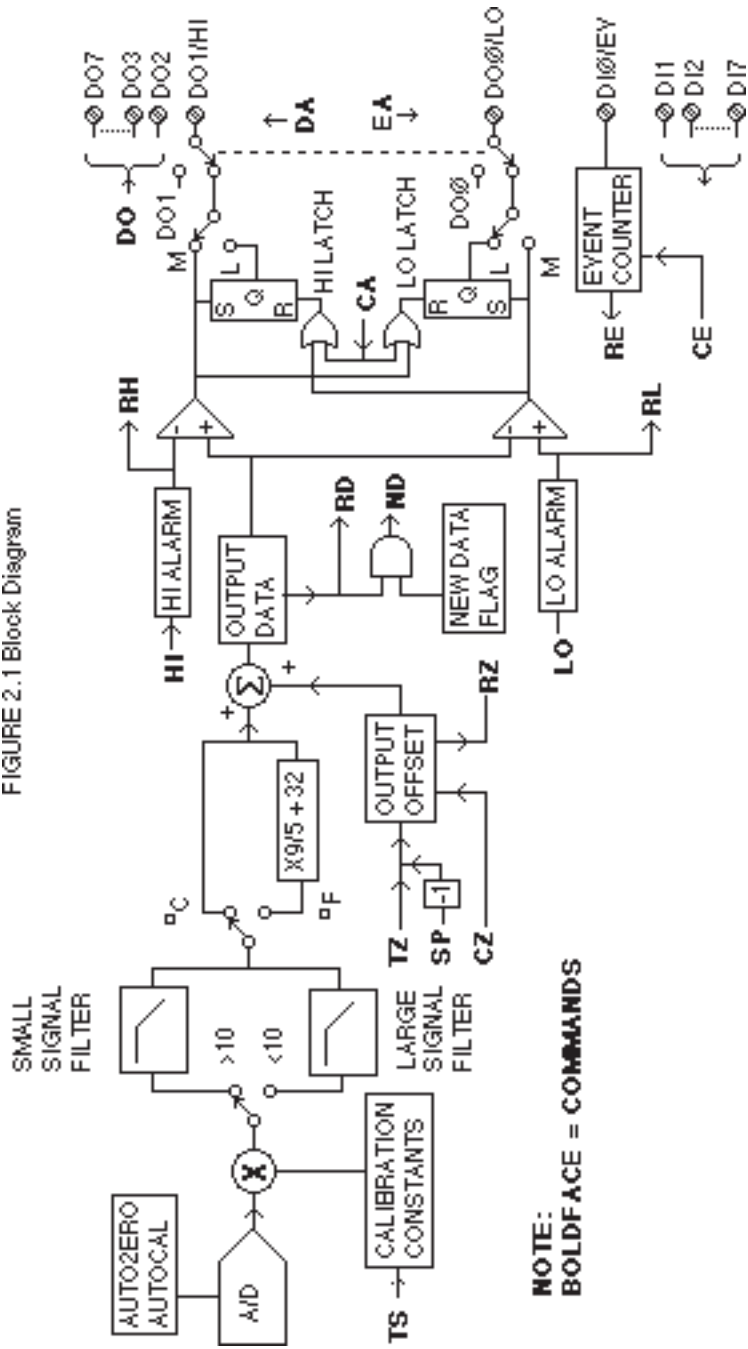

FIGURE 2.1 Block Diagram

Artisan Technology Group - Quality Instrumentation ... Guaranteed | (888) 88-SOURCE | www.artisantg.com

Chapter 3
Communications

Introduction

The D1000 modules has been carefully designed to be easy to interface to all popular computers and terminals. All communications to and from the modules are performed with printable ASCII characters. This allows the information to be processed with string functions common to most high-level languages such as BASIC. For computers that support RS-232C, no special machine language software drivers are necessary for operation. The modules can be connected to auto-answer modems for long-distance operation without the need for a supervisory computer. The ASCII format makes system debugging easy with a dumb terminal.

This system allows multiple modules to be connected to a communications port with a single 4-wire cable. Up to 32 RS-485 modules may be strung together on one cable; 122 with repeaters. A practical limit for RS-232C units is about ten, although a string of 122 units is possible. The modules communicate with the host on a polling system; that is, each module responds to its own unique address and must be interrogated by the host. A module can never initiate a communications sequence. A simple command/response protocol must be strictly observed to avoid communications collisions and data errors.

Communications to the D1000 modules is performed with two-character ASCII command codes such as RD to Read Data from the analog input. A complete description of all commands is given in the Chapter 4. A typical command/response sequence would look like this:

Command: **$1RD**
Response: ***+00123.00**

A command/response sequence is not complete until a valid response is received. The host may not initiate a new command until the response from a previous command is complete. Failure to observe this rule will result in communications collisions. A valid response can be in one of three forms:

1) a normal response indicated by a ‘ * ‘ prompt
2) an error message indicated by a ‘ ? ‘ prompt
3) a communications time-out error

When a module receives a valid command, it must interpret the command, perform the desired function, and then communicate the response back to the host. Each command has an associated delay time in which the module is busy calculating the response. If the host does not receive a response in an appropriate amount of time specified in Table 3.1, a communications time-out error has occurred. After the communications time-out it is assumed that no response data is forthcoming. This error usually results when

Artisan Technology Group - Quality Instrumentation ... Guaranteed | (888) 88-SOURCE | www.artisantg.com

an improper command prompt or address is transmitted. The table below lists the timeout specification for each command:

Mnemonic	Timeout
DI,DO,RD	10 mS
ND	See text
All other commands	100 mS

Table 3.1 Response Timeout Specifications.

The timeout specification is the turn-around time from the receipt of a command to when the module starts to transmit a response.

Data Format

All modules communicate in standard NRZ asynchronous data format. This format provides one start bit, seven data bits, one parity bit and one stop bit for each character.

RS-232C

RS-232C is the most widely used communications standard for information transfer between computing equipment. RS-232C versions of the D1000 will interface to virtually all popular computers without any additional hardware. Although the RS-232C standard is designed to connect a single piece of equipment to a computer, the D1000 system allows for several modules to be connected in a daisy-chain network structure.The advantages offered by the RS-232C standard are:

1) widely used by all computing equipment
2) no additional interface hardware in most cases
3) separate transmit and receive lines ease debugging
4) compatible with dumb terminals

However, RS-232C suffers from several disadvantages:

1) low noise immunity
2) short usable distance
3) greater communications delay in multiple-module systems
4) less reliable–loss of one module; communications are lost
5) wiring is slightly more complex than RS-485
6) host software must handle echo characters

Single Module Connection

Artisan Technology Group - Quality Instrumentation ... Guaranteed | (888) 88-SOURCE | www.artisantg.com

Figure 1.1 shows the connections necessary to attach one module to a host. Use the Default Mode to enter the desired address, baud rate, and other setups (see Setups). The use of echo is not necessary when using a single module on the communications line.

Multi-party Connection

RS-232C is not designed to be used in a multiparty system; however the D1000 modules can be daisy-chained to allow many modules to be connected to a single communications port. The wiring necessary to create the daisy-chain is shown in Figure 3.1. Notice that starting with the host, each Transmit output is wired to the Receive input of the next module in the daisy chain. This wiring sequence must be followed until the output of the last module in the chain is wired to the Receive input of the host. All modules in the chain must be setup to the same baud rate and must echo all received data (see Setups). Each module must be setup with its own unique address to avoid communications collisions (see Setups). In this network, any characters transmitted by the host are received by each module in the chain and passed on to the next station until the information is echoed back to the Receive input of the host. In this manner all the commands given by the host are examined by every module. If a module in the chain is correctly addressed and receives a valid command, it will respond by transmitting the response on the daisy chain network. The response data will be ripple through any other modules in the chain until it reaches its final destination, the Receive input of the host.

The daisy chain network must be carefully implemented to avoid the pitfalls

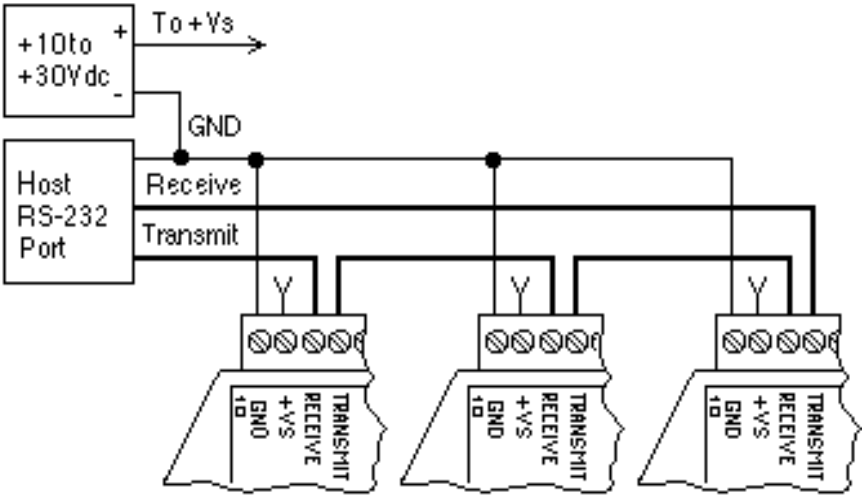

Figure 3.1 RS-232 Daisy Chain Network.

Artisan Technology Group - Quality Instrumentation ... Guaranteed | (888) 88-SOURCE | www.artisantg.com

inherent in its structure. The daisy-chain is a series-connected structure and any break in the communications link will bring down the whole system. Several rules must be observed to create a working chain:

1. All wiring connections must be secure; any break in the wiring, power, ground or communications breaks the chain.
2. All modules must be plugged into their own connectors.
3. All modules must be setup for the same baud rate.
4. All modules must be setup for echo.

Software Considerations

If the host device is a computer, it must be able to handle the echoed command messages on its Receive input along with the responses from the module. This can be handled by software string functions by observing that a module response always begins with a ‘ * ‘ or ‘ ? ‘ character and ends with a carriage return.

A properly addressed D1000 module in a daisy chain will echo all of the characters in the command including the terminating carriage return. Upon receiving the carriage return, the module will immediately calculate and transmit the response to the command. During this time, the module will not echo any characters that appear on its receive input. However, if a character is received during this computation period, it will be stored in the module’s internal receive buffer. This character will be echoed after the response string is transmitted by the module. This situation will occur if the host computer appends a linefeed character on the command carriage return. In this case the linefeed character will be echoed after the response string has been transmitted.

The daisy chain also affects the command timeout specifications. When a module in the chain receives a character it is echoed by retransmitting the character through the module’s internal UART. This method is used to provide more reliable communications since the UART eliminates any slewing errors caused by the transmission lines. However, this method creates a delay in propagating the character through the chain. The delay is equal to the time necessary to retransmit one character using the baud rate setup in the module:

Baud Rate	Delay	Baud Rate	Delay
300	33.30ms	9600	1.04ms
600	16.70ms	19200	0.52ms
1200	8.33ms	38400	0.26ms
2400	4.17ms	57600	173.6µs
4800	2.08ms	115200	86.8µs

One delay time is accumulated for each module in the chain. For example,

Artisan Technology Group - Quality Instrumentation ... Guaranteed | (888) 88-SOURCE | www.artisantg.com

if four modules are used in a chain operating at 1200 baud, the accumulated delay time is 4 X 8.33 mS = 33.3 mS This time must be added to the times listed in Table 3.1 to calculate the correct communications time-out error.

For modules with RS-232C outputs, the programmed communications delay specified in the setup data (see Chapter 5) is implemented by sending a NULL character (00) followed by an idle line condition for one character time. This results in a delay of two character periods. For longer delay times specified in the setup data, this sequence is repeated. Programmed communications delay is seldom necessary in an RS-232C daisy chain since each module in the chain adds one character of communications delay.

Changing Baud Rate

It is possible to change the baud rate of an RS-232C daisy chain on-line. This process must be done carefully to avoid breaking the communications link.

1. Use the SetUp (SU) command to change the baud rate setup on each module in the chain. Be careful not to generate a reset during this process. A reset can be caused by the Remote Reset (RR) command or power interruptions.

2. Verify that all the modules in the chain contain the new baud rate setup using the Read Setup (RS) command. Every module in the chain must be setup for the same baud rate.

3. Remove power from all the modules for at least 10 seconds. Restore power to the modules. This generates a power-up reset in each module and loads in the new baud rate.

4. Change the host baud rate to the new value and check communications.

5. Be sure to compensate for a different communications delay as a result of the new baud rate.

Using A Daisy-Chain With A Dumb Terminal

A dumb terminal can be used to communicate to a daisy-chained system. The terminal is connected in the same manner as a computer used as a host. Any commands typed into the dumb terminal will be echoed by the daisy chain. To avoid double characters when typing commands, set the terminal to full duplex mode or turn off the local echo. The daisy chain will provide the input command echo.

Artisan Technology Group - Quality Instrumentation ... Guaranteed | (888) 88-SOURCE | www.artisantg.com

RS-485

RS-485 is a recently developed communications standard to satisfy the need for multidropped systems that can communicate at high data rates over long distances. RS-485 is similar to RS-422 in that it uses a balanced differential pair of wires switching from 0 to 5V to communicate data. RS-485 receivers can handle common mode voltages from -7V to +12V without loss of data, making them ideal for transmission over great distances. RS-485 differs from RS-422 by using one balanced pair of wires for both transmitting and receiving. Since an RS-485 system cannot transmit and receive at the same time it is inherently a half-duplex system. RS-485 offers many advantages over RS-232C:

1) balanced line gives excellent noise immunity
2) can communicate with D1000 modules at 115200 baud
3) communications distances up to 4,000 feet.
4) true multidrop; modules are connected in parallel
5) can disconnect modules without losing communications
6) up to 32 modules on one line; 122 with repeaters
7) no communications delay due to multiple modules
8) simplified wiring using standard telephone cable

RS-485 does have disadvantages. Very few computers or terminals have built-in support for this new standard. Interface boards are available for the IBM PC and compatibles and other RS-485 equipment will become available as the standard gains popularity. An RS-485 system usually requires an interface.

We offer the A1000 and A2000 interface converters that will convert RS-232 signals to RS-485 or repeat RS-485 signals. The A1000 converters also include a +24Vdc, one amp power supply for powering D1000 series modules. The A1000 or A2000 connected as an RS-485 repeater can be used to extend an existing RS-485 network or connect up to 122 modules on one serial communications port.

Artisan Scientific - Quality Instrumentation Guaranteed (888) 88-SOURCE | www.artisanscientific.com

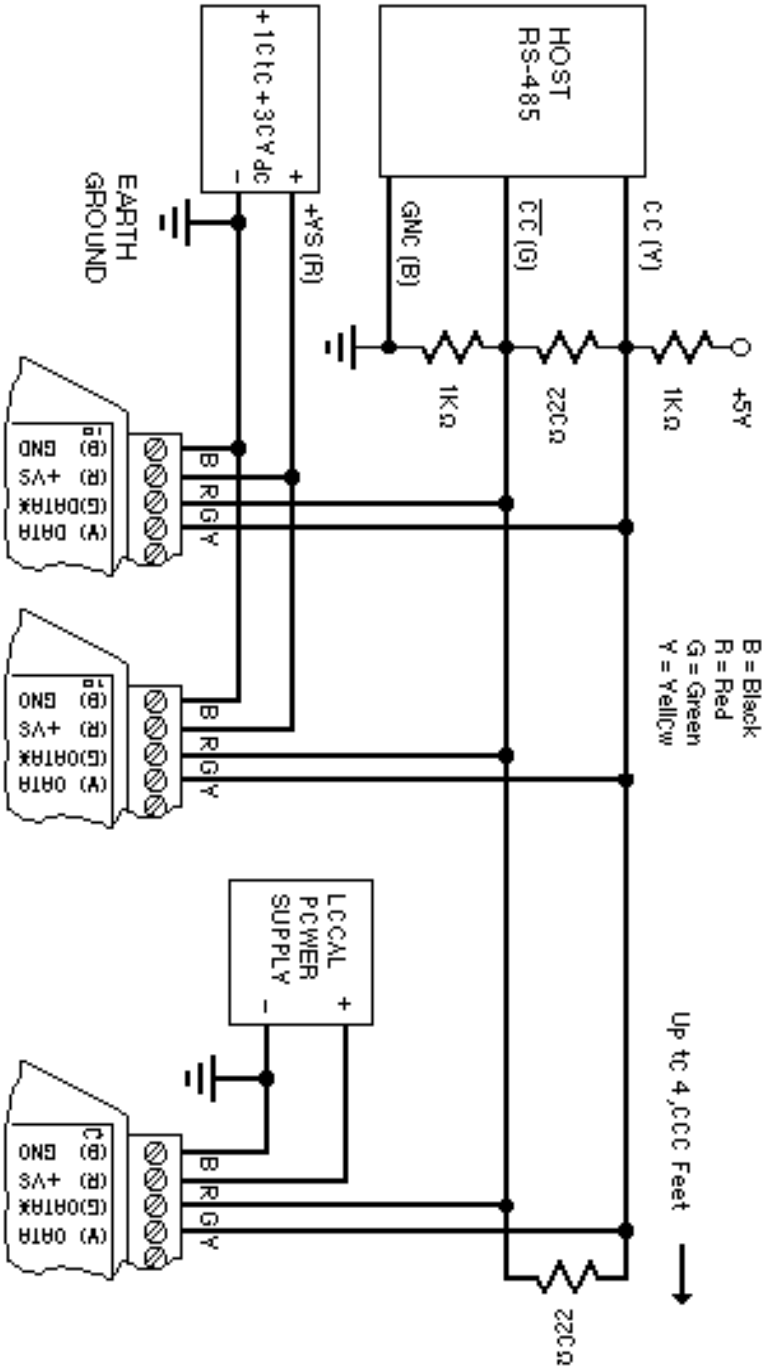

Figure 3.2 RS-485 Network.

RS-485 Multidrop System

Figure 3.2 illustrates the wiring required for multiple-module RS-485 system. Notice that every module has a direct connection to the host system. Any number of modules may be unplugged without affecting the remaining modules. Each module must be setup with a unique address and the addresses can be in any order. All RS-485 modules must be setup for no echo to avoid bus conflicts (see Setup). Also note that the connector pins on each module are labelled with notations (B), (R), (G), and (Y). This designates the colors used on standard 4-wire telephone cable:

Label	Color
(B) GND	Black
(R) V+	Red
(G) DATA* (-)	Green
(Y) DATA (+)	Yellow

This color convention is used to simplify installation. If standard 4-wire telephone cable is used, it is only necessary to match the labeled pins with the wire color to guarantee correct installation.

DATA* on the label is the complement of DATA (negative true).

To minimize unwanted reflections on the transmission line, the bus should be arranged as a line going from one module to the next. ‘Tree’ or random structures of the transmission line should be avoided. When using long transmission lines and/or high baud rates, the data lines should be terminated at each end with 200 ohm resistors. Standard values of 180 ohms or 220 ohms are acceptable.

During normal operation, there are periods of time where all RS-485 drivers are off and the communications lines are in an 'idle' high impedance condition. During this condition, the lines are susceptible to noise pickup which may be interpreted as random characters on the communications line. To prevent noise pickup, all RS-485 systems should incorporate 1K ohm bias resistors as shown in Figure 3.2. The resistors will maintain the data lines in a 'mark' condition when all drivers are off.

A1000 series converter boxes have the 1KΩ resistors built-in. The resistors are user-selectable via dip switch located on the rear panel of the A1000.

Special care must be taken with very long busses (greater than 1000 feet) to ensure error-free operation. Long busses must be terminated as described above. The use of twisted cable for the DATA and DATA* lines will greatly enhance signal fidelity. Use parity and checksums along with the ‘#’ form of all commands to detect transmission errors. In situations where many modules are used on a long line, voltage drops in the power leads

Artisan Technology Group - Quality Instrumentation ... Guaranteed | (888) 88-SOURCE | www.artisantg.com

becomes an important consideration. The GND wire is used both as a power connection and the common reference for the transmission line receivers in the modules. Voltage drops in the GND leads appear as a common-mode voltage to the receivers. The receivers are rated for a maximum of -7V. of common-mode voltage. For reliable operation, the common mode voltage should be kept below -5V.

To avoid problems with voltage drops, modules may be powered locally rather than transmitting the power from the host. Inexpensive 'calculator' type power supplies are useful in remote locations. When local supplies are used, be sure to provide a ground reference with a third wire to the host or through a good earth ground. With local supplies and an earth ground, only two wires for the data connections are necessary.

Communications Delay

All D1000 modules with RS-485 outputs are setup at the factory to provide two units of communications delay after a command has been received (see Chapter 5). This delay is necessary when using host computers that transmit a carriage return as a carriage return-linefeed string. Without the delay, the linefeed character may collide with the first transmitted character from the module, resulting in garbled data. If the host computer transmits a carriage return as a single character, the delay may be set to zero to improve communications response time.

Artisan Scientific - Quality Instrumentation Guaranteed | (888) 88-SOURCE | www.artisan-sci.com

Chapter 4
Command Set

The D1000 modules operate with a simple command/response protocol to control all module functions. A command must be transmitted to the module by the host computer or terminal before the module will respond with useful data. A module can never initiate a communications sequence. A variety of commands exists to exploit the full functionality of the modules. A list of available commands and a sample format for each command is listed in Table 4.1.

Command Structure

Each command message from the host must begin with a command prompt character to signal to the modules that a command message is to follow. There are four valid prompt characters; a dollar sign character ($) is used to generate a short response message from the module. A short response is the minimum amount of data necessary to complete the command. The second prompt character is the pound sign character (#) which generates long responses (will be covered later in this chapter). The other two prompt characters: left curly brace ({) and right curly brace (}) are part of the Extended Addressing mode described in chapter 10

The prompt character must be followed by a single address character identifying the module to which the command is directed. Each module attached to a common communications port must be setup with its own unique address so that commands may be directed to the proper unit. Module addresses are assigned by the user with the SetUp (SU) command. Printable ASCII characters such as ‘1’ (ASCII $31) or ‘A’ (ASCII $41) are the best choices for address characters.

The address character is followed by a two-character command that identifies the function to be performed by the module. All of the available commands are listed in Table 4.1 along with a short function definition. All commands are described in Chapter 4. Commands must be transmitted as upper-case characters.

A two-character checksum may be appended to any command message as a user option. See ‘Checksum’ in Chapter 4 .

All commands must be terminated by a Carriage Return character (ASCII $0D). (In all command examples in this text the Carriage Return is either implied or denoted by the symbol ‘CR’.)

In addition to the command structure discussed above there is a special command format called Extended Addressing. This mode uses a different prompt, either '{' or '}' to distinguish it from the regular command syntax. The Extended Addressing mode is described in chapter 10.

Artisan Technology Group - Quality Instrumentation ... Guaranteed | (888) 88-SOURCE | www.artisantg.com

Data Structure

Many commands require additional data values to complete the command definition as shown in the example commands in Table 4.1. The particular data necessary for these commands is described in full in the complete command descriptions.

The most common type of data used in commands and responses is analog data. Analog data is always represented in the same format for all models in the D1000 series. Analog data is represented as a nine-character string consisting of a sign, five digits, decimal point, and two additional digits. The string represents a decimal value in engineering units. Examples:

+12345.68
+00100.00
-00072.10
-00000.00

When using commands that require analog data as an argument, the full nine-character string must be used, even if some digits are not significant. Failure to do this results in a SYNTAX ERROR.

Analog data responses from the module will always be transmitted in the nine-character format. This greatly simplifies software parsing routines since all analog data is in the same format for all module types.

In many cases, some of the digits in the analog data may not be significant. For instance, the D1300 thermocouple input modules feature 1 degree output resolution. A typical analog data value from this type of module could be +00123.00. The two digits to the right of the decimal point have no significance in this particular model. However, the data format is always adhered to in order to maintain compatibility with other module types.

The maximum computational resolution of the module is 16 bits, which is less than the resolution that may be represented by an analog data variable. This may lead to round-off errors in some cases. For example, an alarm value may be stored in a D1000 module using the ‘HI’ command:

Command: **$1HI+12345.67M**
Response: ***

The alarm value is read back with the Read High (RH) command:

Command: **$1RH**
Response: ***+12345.60M**

It appears that the data read back does not match the value that was originally saved. The error is caused by the fact that the value saved exceeds the computational resolution of the module. This type of round-off error only

Artisan Technology Group - Quality Instrumentation ... Guaranteed | (888) 88-SOURCE | www.artisantg.com

appears when large data values saved in the module's EEPROM are read back. In most practical applications, the problem is non-existent.

Overload values of analog data are +99999.99 and -99999.99 .

Data read back from the Event Counter with the Read Events (RE) command is in the form of a seven-digit decimal number with no sign or decimal point. Round-off errors do not occur on the event counter. For example:

Command: $1RE
Response: *0000123

The Digital Input, Digital Output, and Setup commands use hexadecimal representations of data. The data structures for these commands are detailed in the command descriptions.

Write Protection

Many of the commands listed in Table 4.1 are under the heading of 'Write Protected Commands'. These commands are used to alter setup data in the module's EEPROM. They are write protected to guard against accidental loss of setup data. All write-protected commands must be preceded by a Write Enable (WE) command before the protected command may be executed.

Miscellaneous Protocol Notes

The address character must transmitted immediately after the command prompt character. After the address character the module will ignore any character below ASCII $23 (except CR). This allows the use of spaces (ASCII $20) within the command message for better readability if desired.

The length of a command message is limited to 20 printable characters. If a properly addressed module receives a command message of more than 20 characters the module will abort the whole command sequence and no response will result.

If a properly addressed module receives a second command prompt before it receives a CR, the command will be aborted and no response will result.

Response Structure

Response messages from the module begin with either an asterisk ' * ' (ASCII $2A) or a question mark ' ? ' (ASCII $3F) prompt. The ' * ' prompt indicates acknowledgment of a valid command. The ' ? ' prompt precedes an error message. All response messages are terminated with a CR. Many commands simply return a ' * ' character to acknowledge that the command has been executed by the module. Other commands send data information

Artisan Technology Group - Quality Instrumentation ... Guaranteed | (888) 88-SOURCE | www.artisantg.com

following the ‘ * ‘ prompt. The response format of all commands may be found in the detailed command description.

The maximum response message length is 20 characters.

A command/response sequence is not complete until a valid response is received. The host may not initiate a new command until the response from a previous command is complete. Failure to observe this rule will result in communications collisions. A valid response can be in one of three forms:

1) a normal response indicated by a ‘ * ‘ prompt
2) an error message indicated by a ‘ ? ‘ prompt
3) a communications time-out error

When a module receives a valid command, it must interpret the command, perform the desired function, and the communicate the response back to the host. Each command has an associated delay time in which the module is busy calculating the response. If the host does not receive a response in an appropriate amount of time specified in Table 4.1, a communications time-out error has occurred. After the communications time-out it is assumed that no response data is forthcoming. This error usually results when an improper command prompt or address is transmitted.

Long Form Responses

When the pound sign ‘ # ‘ command prompt is used, the module responds with a ‘long form’ response. This type of response will echo the command message, supply the necessary response data and will add a two-character checksum to the end of the message. Long form responses are used when the host wishes to verify the command received by the module. The checksum is included to verify the integrity of the response data. The ‘ # ‘ command prompt may be used with any command. For example:

Command:	**$1RD**	**(short form)**
Response:	***+00072.10**	
Command:	**#1RD**	**(long form)**
Response:	***1RD+00072.10A4**	**(A4=checksum)**

Checksum

Checksum is a two character hexadecimal value appended to the end of a message. It verifies that the message received is exactly the same as the message sent. The checksum ensures the integrity of the information communicated.

Command Checksum

A two-character checksum may be appended to any command to the module as a user option. When a module interprets a command, it looks for

Artisan Scientific - Quality Instrumentation Guaranteed | (888) 88-SOURCE | www.artisan.com

the two extra characters and assumes that it is a checksum. If the checksum is not present, the module will perform the command normally. If the two extra characters are present, the module calculates the checksum for the message. If the calculated checksum does not agree with the transmitted checksum, the module responds with a 'BAD CHECKSUM' error message and the command is aborted. If the checksums agree, the command is executed. If the module receives a single extra character, it responds with 'SYNTAX ERROR' and the command is aborted For example:

Command:	**$1RD**	**(no checksum)**
Response:	***+00072.10**	
Command:	**$1RDEB**	**(with checksum)**
Response:	***+00072.10**	
Command:	**$1RDAB**	**(incorrect checksum)**
Response:	**?1 BAD CHECKSUM**	
Command:	**$1RDE**	**(one extra character)**
Response:	**?1 SYNTAX ERROR**	

Response Checksums

If the long form ' # ' version of a command is transmitted to a module, a checksum will be appended to the end of the response. For example:

Command:	**$1RD**	**(short form)**
Response:	***+00072.10**	
Command:	**#1RD**	**(long form)**
Response:	***1RD+00072.10A4**	**(A4=checksum)**

Checksum Calculation

The checksum is calculated by summing the hexadecimal values of all the ASCII characters in the message. The lowest order two hex digits of the sum are used as the checksum. These two digits are then converted to their ASCII character equivalents and appended to the message. This ensures that the checksum is in the form of printable characters.

Example: Append a checksum to the command #1DOFF

Characters:	#	1	D	O	F	F
ASCII hex values:	23	31	44	4F	46	46
Sum (hex addition)	23 +	31 +	44 +	4F +	46 +	46 = 173

The checksum is 73 (hex). Append the characters 7 and 3 to the end of the message: #1DOFF73

Example: Verify the checksum of a module response *1RD+00072.10A4

Artisan Technology Group - Quality Instrumentation ... Guaranteed | (888) 88-SOURCE | www.artisantg.com

The checksum is the two characters preceding the CR: A4

Add the remaining character values:

```
*    1    R    D    +    0    0    0    7    2    .    1    0
2A + 31 + 52 + 44 + 2B + 30 + 30 + 30 + 37 + 32 + 2E + 31 + 30 = A4
```

The two lowest-order hex digits of the sum are A4 which agrees with the transmitted checksum.

The transmitted checksum is the character string equivalent to the calculated hex integer. The variables must be converted to like types in the host software to determine equivalency.

If checksums do not agree, a communications error has occurred.

If a module is setup to provide linefeeds, the linefeed characters are not included in the checksum calculation.

Parity bits are never included in the checksum calculation.

Table 4.1 D1000 Command Set

Command and Definition		Typical Command Message	Typical Response Message ($ prompt)
DI	Read Alarms/Digital Inputs	$1DI	*0003
DO	Set Digital Outputs	$1DOFF	*
ND	New Data	$1ND	*+00072.00
RD	Read Data	$1RD	*+00072.00
RE	Read Event Counter	$1RE	*0000107
REA	Read Extended Address	$1REA	*3031
RH	Read High Alarm Value	$1RH	*+00510.00L
RID	Read IDentification	$1RID	* BOILER
RL	Read Low Alarm Value	$1RL	*+00000.00L
RPT	Read Pulse Transition	$1RPT	*+-
RS	Read Setup	$1RS	*31070142
RZ	Read Zero	$1RZ	*+00000.00
WE	Write Enable	$1WE	*
Write Protected Commands			
CA	Clear Alarms	$1CA	*
CE	Clear Events	$1CE	*
CZ	Clear Zero	$1CZ	*
DA	Disable Alarms	$1DA	*
EA	Enable Alarms	$1EA	*

Artisan Technology Group - Quality Instrumentation ... Guaranteed | (888) 88-SOURCE | www.artisantg.com

EC	Events Read & Clear	$1EC	*0000107
HI	Set High Alarm Limit	$1HI+12345.67L	*
ID	IDentification	$1ID BOILER	*
LO	Set Low Alarm Limit	$1LO+12345.67L	*
PT	Pulse Transition	$1PT+-	*
RR	Remote Reset	$1RR	*
SU	Setup Module	$1SU31070142	*
SP	Set Setpoint	$1SP+00600.00	*
TS	Trim Span	$1TS+00600.00	*
TZ	Trim Zero	$1TZ+00000.00	*
WEA	Write Extended Address	$1WEA3031	*

D1000 User Commands

Note that in all command and response examples given below, a carriage return is implied after every character string.

Clear Alarms (CA)

The clear alarms command turns both the HI and LO alarms OFF. This command does not affect the enable/disable or momentary/latching alarm conditions. The alarms will continue to be compared to the input data after the CA command is given. In cases where the alarm condition persists, the alarms will be set at the end of the next input data conversion. The primary purpose of the CA command is to clear latching alarms. See the Alarm Output section of Chapter 6 for more information.

Command: $1CA
Response: *

Command: #1CA
Response: *1CADF

Clear Events (CE)

Clear Events command clears the events counter to 0000000.

Command: $1CE
Response: *

Command: #1
Response: *1CEE3

Note: When the events counter reaches 9999999, it stops counting. A CE command must be sent to resume counting.

Clear Zero (CZ)

The Clear Zero command clears the output offset register value to +00000.00. This command clears any data resulting from a Trim Zero (TZ)

Artisan Technology Group - Quality Instrumentation ... Guaranteed | (888) 88-SOURCE | www.artisantg.com

or SetPoint (SP) command.

Command: **$1CZ**
Response: *****

Command: **#1CZ**
Response: ***1CZF8**

Disable Alarms (DA)

Most D1000 modules feature LO/DO0 and HI/DO1 pins on the module connector. These pins serve a dual function and can be used to output either the alarm outputs or digital outputs 0 and 1. The Disable Alarms command is used to connect the digital outputs 0 and 1 to the connector pins. The alarm settings are not affected in any way except that the alarm outputs are disconnected from the module connector. The alarm status can still be read with the Digital Input (DI) command. The complement to the DA command is the Enable Alarms (EA) command.

Command: **$1DA**
Response: *****

Command: **#1DA**
Response: ***1DAE0**

Digital Input (DI)

The DI command reads the status of the digital inputs and the alarms. The response to the DI command is four hex characters representing two bytes of data. The first byte contains the alarm status. The second byte contains the digital input data.

Command: **$1DI**
Response: ***0003**

Command: **#1DI**
Response: ***1DI0003AB**

Listed below are the four possible alarm states in the first digital input byte and their hex values.

00 Both HI and LO alarms off.
01 HI alarm off. LO alarm on.
02 HI alarm on. LO alarm off.
03 Both HI and LO alarms on.

The second byte displays the hex value of the digital input status. The number of digital inputs varies depending on module type.

Digital Inputs	DI7	DI6	DI5	DI4	DI3	DI2	DI1	DI0
Data Bits	7	6	5	4	3	2	1	0

Artisan Technology Group - Quality Instrumentation ... Guaranteed | (888) 88-SOURCE | www.artisantg.com

For example: A typical response from a $1DI command could be: *01FE. This response indicates that the HI alarm is off, the LO alarm is on, DI0 = 0 and all other digital inputs are = 1

All digital inputs that are not implemented or left unconnected are read as ‘1’

Digital input 0 serves a dual function. It is both a digital input and the Event Counter input.

When reading digital inputs with a checksum, be sure not to confuse the checksum with the data.

Digital Output (DO)

The DO command controls eight bits of digital outputs on the module connector. The number of digital outputs implemented depends on the model used. The digital outputs allow the module to control external circuits under host command. The DO command requires an argument of two hex characters specifying the eight bits of output data.

Digital Outputs	DO7	DO6	DO5	DO4	DO3	DO2	DO1	DO0
Data Bits	7	6	5	4	3	2	1	0

The electrical implementation of the digital output consists of open-collector transistors wired to the module connector. If a digital output is set to ‘1’ the corresponding transistor is turned on and sinks current. Note that when a digital output bit is set to ‘1’ the electrical output is near 0 volts. If a digital output is set to ‘0’ the corresponding transistor is turned off and sinks no current.

Assume a module has two digital outputs, and you wish to turn both outputs on (sinking current). Set data bit 0 and data bit 1 to ‘1’. Since the module has only two digital outputs, all the other bits are ‘don’t cares’. For example, this command will turn both outputs ‘on’:

Command: **$1DOFF**
Response: ***

To turn both outputs off you could use the command:

Command: **$1DO00**
Response: ***

Digital outputs 0 and 1 share connector pins with the HI and LO alarms. The Disable Alarms (DA) command is used to configure these pins as digital outputs.

Digital output settings are not stored in nonvolatile memory. If a power failure occurs, all digital outputs will be 0 upon power up.

Artisan Technology Group - Quality Instrumentation ... Guaranteed | (888) 88-SOURCE | www.artisantg.com

Enable Alarms (EA)

Digital outputs DO0/LO and DO1/HI serve a dual purpose as both digital outputs and alarms. Digital output 0 is shared with the LO alarm and digital output 1 is shared with the HI alarm. The Enable Alarms (EA) command configures the shared outputs to indicate alarm conditions and disconnects digital outputs 0 and 1. The EA command only affects the electrical output of the alarms to the pins. The alarm status can be read at any time with the Digital Input (DI) command. The complement to the EA command is the Disable Alarms (DA) command.

Command: **$1EA**
Response: *****

Command: **#1EA**
Response: ***1EAE1**

Events Read & Clear (EC)

The EC command is used to read the value of the Events Counter and automatically clears the count to zero:

Command: **$1EC**
Response: ***0000123**

Command: **#1EC**
Response: ***1EC000012339**

The EC command eliminates a problem that may occur with a Read Events (RE) and Clear Events (CE) command sequence. Any counts that may occur between the RE-CE sequence will be lost. The EC command guarantees that the counter is read and cleared without missing any counts.

High Alarm Limit (HI)

The high alarm command sets the value and type of the high alarm. The data specified by the HI command is stored in nonvolatile memory and compared with the sensor data after every A/D conversion. The high alarm is activated if the input data is greater than the value stored by the HI command. The high alarm status may be read using the Digital Input (DI) command. The alarm may be used to activate a digital output by using the Enable Alarms (EA) command. The HI command also specifies whether the high alarm is momentary or latching. A letter indicating the alarm type, “L” for latching or “M” for momentary, must follow the alarm value. For example:

Command: **$1HI+00100.00M**
Response: *****

Command: **#1HI+00100.00M**
Response: ***1HI+00100.00ME3**

Artisan Scientific - Quality Instrumentation Guaranteed (888) 88-SOURCE | www.artisan.com

The alarm limit should be set within the output range of the module. If the alarm limit is set beyond the output range, the alarm will be activated only on an overload condition.

The high alarm value may be read back with the Read High Alarm (RH) command.

A latched alarm may be cleared with the Clear Alarms (CA) command. More information on alarms may be found in Chapter 6.

IDentification (ID)

The IDentification command allows the user to write a message into the internal nonvolatile memory which may be read back at any time using the Read IDentification (RID) command. The message may be up to 16 characters long and has no affect on the module operation. Useful information such as the module location, calibration date or model number may be stored for later retrieval.

The ID command is write protected and checksums are not supported. The module will abandon any ID command with a message length in excess of 16 characters.

Command: **$1IDBOILER ROOM**
Response: *****

Command: **#1IDBOILER ROOM**
Response: ***1IDBOILER ROOM02**

Low Alarm Limit (LO)

The low alarm command sets the value and type of the low alarm. The data specified with the LO command is stored in nonvolatile memory and compared with the sensor data after every A/D conversion. If the input data is less than the low limit, the low alarm is activated. The low alarm status may be read using the Digital Input (DI) command. The alarm may be used to activate a digital output by using the Enable Alarms (EA) command. A letter indicating the alarm type, “L” for latching or “M” for momentary, must follow the alarm value. For example:

Command: **$1LO+00000.00M**
Response: *****

Command: **#1LO+00000.00M**
Response: ***1LO+00000.00MEC**

The alarm limit should be set within the output range of the module. If the alarm limit is set beyond the output range, the alarm will be activated only on an overload condition.

Artisan Technology Group - Quality Instrumentation ... Guaranteed | (888) 88-SOURCE | www.artisantg.com

The low limit value may be read back with the Read Low Limit (RL) command. More information on alarms may be found in Chapter 6.

New Data Command (ND)

The New Data (ND) command is a variation of the Read Data (RD) command used to read sensor data from the module. The ND command guarantees that the output data has not been previously read.

The D1000 module acquires analog input data eight times a second and stores the result in the output buffer (see Figure 2.1). The Read Data (RD) command simply reads the results stored in the output buffer. A fast host communicating at a high baud rate could possibly read the output buffer several times before the information is updated with a new A/D conversion. This results in redundant information which may be confusing or may be a waste of host processor time.

Associated with the output buffer is the New Data Flag (see Figure 2.1). This flag is cleared each time an RD or ND command is performed. The flag is set when the module's microprocessor loads the output buffer with the result of the most recent A/D conversion. The ND command will output data only when the New Data Flag is set. If the flag is cleared when an ND command is received, the module will wait until new data is present in the output buffer before responding to the command. Thus, the output data obtained with an ND command is always the result of a new A/D conversion.

The ND command is especially useful with computers that handle communications on an interrupt basis. The ND command is used to get maximum throughput without producing redundant data.

Command: **$1ND**
Response: ***+00072.00**

Command: **#1ND**
Response: ***1ND+00072.009F**

A special condition exists when using the ND command with the D1600 frequency/pulse modules. These modules differ from the other sensor input modules in that they require an input trigger signal to obtain new data. If no signal exists on the input of the D1600, an ND command will wait indefinitely for new data and the module will not respond.

In order to escape this condition, a single control-C ($03) may be issued by the host to abort the ND command. The aborted ND command will respond with the data value currently stored in the output buffer. Be aware that on an RS-485 system, the control-C character may interfere with the ND output data, causing a communications collision.

Artisan Technology Group - Quality Instrumentation ... Guaranteed | (888) 88-SOURCE | www.artisantg.com

Pulse Transition (PT)

The Pulse Transition command is used on Frequency and Timer input modules. It is used to set the direction of the edge used to trigger the measurement cycle. There are four possible edge transitions: (+ to -), (- to +), (- to -), (+ to +). For example:

Command: **$1PT+ -**
Response: *****

Command: **#1PT**

Response: ***1PT+ -50**

Read Data (RD)

The read data command is the basic command used to read the buffered sensor data. The output buffer (Figure 2.1) allows the data to be read immediately without waiting for an input A/D conversion. For example:

Command: **$1RD**
Response: ***+00072.00**

Command: **#1RD**
Response: ***1RD+00072.10A4**

Since the RD command is the most frequently used command in normal operation, a special shortened version of the command is available. If a module is addressed without a two-letter command, the module interprets the string as an RD command.

Command: **$1**
Response: ***+00072.10**

Command: **#1**
Response: ***1RD+00072.10A4**

Read Events (RE)

The Read Events command reads the number of events that have been accumulated in the Events Counter. The output is a seven-digit decimal number. For example:

Command: **$1RE**
Response: ***0000107**

Command: **#1RE**
Response: ***1RE00001074A**

The maximum accumulated count is 9999999. When this count is reached, the Events Counter stops counting. The counter may be cleared at any time with the Clear Events (CE) command.

The Event Counter count is stored in volatile memory. If power is removed, the Event Counter will reset to all 0's upon power up.

Artisan Technology Group - Quality Instrumentation ... Guaranteed | (888) 88-SOURCE | www.artisantg.com

The Remote Reset (RR) command or a line break does not effect the value of the Event Counter.

When reading the Event Counter with a checksum, be sure not to confuse the checksum with the data.

Read Extended Address (REA)

The Read Extended Address is used to read back two character address stored by the Extended Address (EA) command. The response message is four characters representing the hex ASCII codes for the two-character address :

Command: $1REA
Response: *3031

Command: #1REA
Response: *1REA3031FA

In this example the '30' and '31' are the hex ASCII codes for the characters '0' and '1' respectively. The Extended Address is '01'.

Read High Alarm (RH)

The Read High alarm command reads the value and type of the high alarm previously loaded by the HI command. The alarm type can be either latching or momentary. A letter indicating the alarm type, “L” for latching or “M” for momentary, will follow the alarm value. For example:

Command: $1RH
Response: *+00510.00L

Command: #1RH
Response: *1RH+00510.00LF0

The RH command may be used to verify the data loaded into nonvolatile memory by the HI command.

Read IDentification (RID)

The Read Identification (RID) command is used to read data previously stored by the ID command. The RID command response message length is variable depending on the stored message length. The maximum response length can be up to 25 characters using the long form prompt and linefeeds enabled.

Command: $1RID
Response: *BOILER ROOM

Command: #1RID
Response: *1RIDBOILER ROOM54

Artisan Scientific - Quality Instrumentation Guaranteed (888) 88-SOURCE | www.artisan.com

Read Low Alarm (RL)

The Read Low alarm command reads the value and type of the low alarm. The alarm type can be either latching or momentary. A letter indicating the alarm type, “L” for latching or “M” for momentary, will follow the alarm value. For example:

Command: **$1RL**
Response: ***+00000.00L**

Command: **#1RL**

Response: ***1RL+00000.00LEE**

The RL command may be used to verify data loaded into the nonvolatile memory with the LO command.

Read Pulse Transition (RPT)

The Read Pulse Transition command is used on the Timer and Frequency input modules. The RPT command reads the direction of the edge used to trigger the measurement cycle. The direction of the pulse transition is set by the user using the Pulse Transition (PT) command. There are four possible edge transitions: (+ to -), (- to +), (- to -), (+ to +). For example:

Command: **$1RPT**
Response: ***+ -**

Command: **#1RPT**

Response: ***1RPT+ -A2**

Remote Reset (RR)

The reset command allows the host to perform a program reset on the module’s microprocessor. This may be necessary if the module’s internal program is disrupted by static or other electrical disturbances. Once a reset command is received, the module will recalibrate itself. The calibration process takes approximately 3 seconds. For example:

Command: **$1RR**
Response: ***

Command: **#1RR**
Response: ***1RRFF**

In general, the state of the digital outputs and the event counter will not be affected by the RR command. However, if data in the microprocessor’s RAM (Random Access Memory) has been lost, the RR command will result in a full power-up reset.

Any commands sent to the module during the self-calibration sequence will result in a NOT READY error.

Artisan Technology Group - Quality Instrumentation ... Guaranteed | (888) 88-SOURCE | www.artisantg.com

Read Setup (RS)

The read setup command reads back the setup information loaded into the module's nonvolatile memory with the SetUp (SU) command. The response to the RS command is four bytes of information formatted as eight hex characters.

Command: $1RS
Response: *31070142

Command: #1RS
Response: *1RS3107014292

The response contains the module's channel address, baud rate and other parameters. Refer to the setup command (SU), and Chapter 5 for a list of parameters in the setup information.

When reading the setup with a checksum, be sure not to confuse the checksum with the setup information.

Read Zero (RZ)

The Read Zero command reads back the value stored in the Output Offset Register (Figure 2.1).

Command: $1RZ
Response: *+00000.00

Command: #1RZ
Response: *1RZ+00000.00B0

The data read back from the Output Offset Register may be interpreted in several ways. The commands that affect this value are: Trim Zero (TZ), SetPoint (SP) and Clear Zero (CZ).

Setpoint (SP)

Data specified by the setpoint command is multiplied by -1 and loaded into the Output Offset Register (Figure 2.1). The SP command is useful in on-off controllers—see Chapter 6. The SP command may be used to null out sensor data to obtain a deviation output when using RD or ND commands.

Command: $1SP+00450.00
Response: *

Command: #1SP+00450.00
Response: *1SP+00450.00B0

It is possible to load setpoint data that is beyond the output range of the sensor. In this case, the setpoint is never reached by the sensor data unless an overload is present.

Artisan Technology Group - Quality Instrumentation ... Guaranteed | (888) 88-SOURCE | www.artisantg.com

To clear a setpoint, use the Clear Zero (CZ) command.

The SP command writes over data written into the Output Offset Register by the Trim Zero (TZ) command. If the Output Offset Register is used as a trim value, this must be accounted for by the host before using the SP command. The value stored in this register may be read back using the Read Zero (RZ) command.

The setpoint data or trim data in the Output Offset Register is saved in nonvolatile memory.

Setup Command (SU)

Each D1000 module contains an EEPROM (Electrically Erasable Programmable Read Only Memory) which is used to store module setup information such as address, baud rate, parity, etc. The EEPROM is a special type of memory that will retain information even if power is removed from the module. The EEPROM is used to replace the usual array of DIP switches normally used to configure electronic equipment.

The SetUp command is used to modify the user-specified parameters contained in the EEPROM to tailor the module to your application. Since the SetUp command is so important to the proper operation of a module, a whole section of this manual has been devoted to its description. See Chapter 5.

The SU command requires an argument of eight hexadecimal digits to describe four bytes of setup information:

Command:	**$1SU31070182**
Response:	*****
Command:	**#1SU31070182**
Response:	***1SU3107018299**

Trim Span (TS)

The trim span command is the basic means of trimming the accuracy of a D1000 module. The TS command loads a calibration factor into nonvolatile memory to trim the full-scale output of the signal conditioning circuitry. It is intended only to compensate for long-term drifts due to aging of the analog circuits, and has a useful trim value of ±10% of the nominal calibration set at the factory. It is not to be used to change the basic transfer function of the module. Full information on the use of the TS command may be found in Chapter 9.

Command:	**$1TS+00500.00**
Response:	*****
Command:	**#1TS+00500.00**
Response:	***1TS+00500.00B0**

Artisan Technology Group - Quality Instrumentation ... Guaranteed | (888) 88-SOURCE | www.artisantg.com

Caution! TS is the only command associated with the span trim. There is no provision to read back or clear errors loaded by the TS command. Misuse of the TS command may destroy the calibration of the unit which can only be restored by using laboratory calibration instruments in a controlled environment. An input signal must be applied when using this command.

Trim Zero (TZ)

The Trim Zero command is used to load a value into the Output Offset Register (Figure 2.1) to null out an offset in the output data. It may be used to trim offsets created by sensors. It may also be used to null out data to create a deviation output.

Example: Assume a D1511 bridge input module is being used with a load cell for weight measurement. An initial reading of the load cell with no weight applied may reveal an initial offset error:

Command: $1RD
Response: *+00005.00

With no weight applied, trim the output to read zero. To trim, use the TZ command and specify the desired output reading:

Command: $1TZ+00000.00 (zero output)
Response: *

The TZ command will load a data value into the Output Offset Register to force the output to read zero. The module will compensate for any previous value loaded into the Output Offset Register. If another output reading is taken, it will show that the offset has been eliminated:

Command: $1RD
Response: *+00000.00

Although the TZ command is most commonly used to null an output to zero, it may be used to offset the output to any specified value. Assume that with the previously nulled load cell system we performed this command:

Command: $1TZ-00100.00
Response: *

The new data output with no load applied would be:

Command: $1RD
Response: *-00100.00

The load cell output is now offset by -100.

The offset value stored by the TZ command is stored in nonvolatile memory and may be read back with the Read Zero (RZ) command and cleared with the Clear Zero (CZ) command.

Artisan Technology Group - Quality Instrumentation ... Guaranteed | (888) 88-SOURCE | www.artisantg.com

The SetPoint (SP) command will write over any value loaded by the TZ command.

Write Enable (WE)

Each module is write protected against accidental changing of alarms, limits, setup, or span and zero trims. To change any of these write protected parameters, the WE command must precede the write-protected command. The response to the WE command is an asterisk indicating that the module is ready to accept a write-protected command. After the write-protected command is successfully completed, the module becomes automatically write disabled. Each write-protected command must be preceded individually with a WE command. For example:

Command: **$1WE**
Response: *****

Command: **#1WE**
Response: ***1WEF7**

If a module is write enabled and the execution of a command results in an error message other than WRITE PROTECTED, the module will remain write enabled until a command is successfully completed resulting in an ‘ * ‘ prompt. This allows the user to correct the command error without having to execute another WE command.

Write Extended Address (WEA)

The Write Extended Address (WEA) command allows the user to set the two-byte address to be used with Extended Addressing (see Chapter 7). The argument of the command specifies the hex ASCII values of the two characters to be used as the Extended Address. For example, if the address is to be set for characters '01':

Command: **$1WEA3031**
Response: *****

Command: **#1WEA3031**
Response: ***1WEA3031FF**

Note that '30' and '31' are the hex ASCII values for characters '0' and '1' respectively.

The EA command is write-protected and must be preceded with a WE command.

The address data may be read back with the Read Extended Address (REA) command.

Artisan Technology Group - Quality Instrumentation ... Guaranteed | (888) 88-SOURCE | www.artisantg.com

ERROR MESSAGES

The D1000 modules feature extensive error checking on input commands to avoid erroneous operation. Any errors detected will result in an error message and the command will be aborted.

All error messages begin with "**?**", followed by the channel address, a space and error description. The error messages have the same format for either the ' $ ' or ' # ' prompts. For example:

?**1 SYNTAX ERROR**

There are eight error messages, and each error message begins with a different character. It is easy for a computer program to identify the error without having to read the entire string.

ADDRESS ERROR

There are six ASCII values that are illegal for use as a module address: NULL ($00), CR ($0D), $ ($24), # ($23), { ($7B) and } ($7D). The ADDRESS ERROR will occur when an attempt is made to load an illegal address into a module with the SetUp (SU) command. An attempt to load an address greater than $7F will produce an error.

BAD CHECKSUM

This error is caused by an incorrect checksum included in the command string. The module recognizes any two hex characters appended to a command string as a checksum. Usually a BAD CHECKSUM error is due to noise or interference on the communications line. Often, repeating the command solves the problem. If the error persists, either the checksum is calculated incorrectly or there is a problem with the communications channel. More reliable transmissions might be obtained by using a lower baud rate.

COMMAND ERROR

This error occurs when the two-character command is not recognized by the module. Often this error results when the command is sent with lower-case letters. All valid commands are upper-case.

NOT READY

If a module is reset, it performs a self-calibration routine which takes 2-3 seconds to complete. Any commands sent to the module during the self-calibration period will result in a NOT READY error. When this occurs, simply wait a couple seconds and repeat the command.

The module may be reset in three ways: a power-up reset, a Remote Reset (RR) command, or an internal reset. All modules contain a 'watchdog' timer

Artisan Scientific - Quality Instrumentation Guarantee - Call (888) 88-SOURCE | www.artisanscientific.com

to ensure proper operation of the microprocessor. The timer may be tripped if the microprocessor is executing its program improperly due to power transients or static discharge.

If the NOT READY error persists for more than 30 seconds, check the power supply to be sure it is within specifications.

PARITY ERROR

A parity error can only occur if the module is setup with parity on (see Setup). Usually a parity error results from a bit error caused by interference on the communications line. Random parity errors are usually overcome by simply repeating the command. If too many errors occur, the communications channel may have to be improved or a slower baud rate may be used.

A consistent parity error will result if the host parity does not match the module parity. In this situation, the easiest solution may be to change the parity in the host to obtain communication. At this point the parity in the module may be changed to the desired value with the SetUp (SU) command.

The parity may be changed or turned off by using Default Mode.

SYNTAX ERROR

A SYNTAX ERROR will result if the structure of the command is not correct. This is caused by having too few or too many characters, signs or decimal points missing or in the wrong place. Table 4.1 lists the correct syntax for all the commands.

VALUE ERROR

This error results when an incorrect character is used as a numerical value. Data values can only contain decimal digits 0-9. Hex values used in the SetUp (SU) and Digital Output (DO) commands can range from 0-F.

WRITE PROTECTED

All commands that write data into nonvolatile memory are write-protected to prevent accidental erasures. These commands must be preceded with a Write Enable (WE) command or else a WRITE PROTECTED error will result.

Artisan Technology Group - Quality Instrumentation - Guaranteed | (888) 88-SOURCE | www.artisan-scientific.com

Chapter 5
Setup Information/SetUp Command

The D1000 modules feature a wide choice of user configurable options which gives them the flexibility to operate on virtually any computer or terminal based system. The user options include a choice of baud rate, parity, address, and many other parameters. The particular choice of options for a module is referred to as the setup information.

The setup information is loaded into the module using the SetUp (SU) command. The SU command stores 4 bytes (32 bits) of setup information into a nonvolatile memory contained in the module. Once the information is stored, the module can be powered down indefinitely (10 years minimum) without losing the setup data. The nonvolatile memory is implemented with EEPROM so there are no batteries to replace.

The EEPROM has many advantages over DIP switches or jumpers normally used for option selection. The module never has to be opened because all of the options are selected through the communications port. This allows the setup to be changed at any time even though the module may be located thousands of feet away from the host computer or terminal. The setup information stored in a module may be read back at any time using the Read Setup command (RS).

The following options can be specified by the SetUp command:

Channel address (122 values)
Linefeeds
Parity (odd, even, none)
Baud rate (300 to 115,200)
Addressing Mode: Extended/Normal
Alarm enable/disable
Alarm momentary / latching
CJC disable (D1300 series)
RTD 3/4 wire (D1400 series)
Fahrenheit / Celsius
Echo
Communication delay (0-6 characters)
Number of displayed digits
Large-signal filter constant
Small-signal filter constant

Each of these options will be described in detail below. For a quick look-up chart on all options, refer to Tables 5.1-4.

Artisan Technology Group - Quality Instrumentation ... Guaranteed | (888) 88-SOURCE | www.artisantg.com

Command Syntax

The general format for the SetUp (SU) command is:

$1SU[byte1][byte 2][byte 3][byte 4]

A typical SetUp command would look like: $1SU31070182.

Notice that each byte is represented by its two-character ASCII equivalent. In this example, byte 1 is described by the ASCII characters '31' which is the equivalent of binary 0011 0001 (31 hex). The operand of a SU command must contain exactly 8 hex (0-F) characters. Any deviation from this format will result in a SYNTAX ERROR. The Appendix contains a convenient hex-to-binary conversion chart.

For the purposes of describing the SetUp command, 'bit 7' refers to the highest-order bit of a byte of data. 'Bit 0' refers to lowest-order bit:

'bit number':	7	6	5	4	3	2	1	0
binary data:	0	0	1	1	0	0	0	1 = $31 (hex)

The SU command is write protected to guard against erroneous changes in the setup data; therefore each SU command must be preceded by a Write Enable (WE) command. To abort an SU command in progress, simply send a non-hex character (an 'X' for example) to generate a SYNTAX ERROR, and try again.

CAUTION: Care must be exercised in using the SU command. Improper use may result in changing communications parameters (address, baud rate, parity) which will result in a loss of communications between the host and the module. In some cases the user may have to resort to using Default Mode to restore the proper setups. The recommended procedure is to first use the Read Setup (RS) command to to examine the existing setup data before proceeding with the SU command.

Byte 1

Byte 1 contains the module (channel) address. The address is stored as the ASCII code for the string character used to address the module. In our example command $1SU31070080 , the first byte '31' is the ASCII code for the character '1'. If our sample command is sent to a module, the EEPROM will be loaded with the address '1', which in this particular case remains unchanged. To change the module address to '2' , byte 1 of the SetUp command becomes '32', which is the ASCII code for the character '2'. Now the command will look like this: $1SU32070080. When this command is sent, the module address is changed from '1' to '2' and will no longer respond to address '1'.

Artisan Technology Group - Quality Instrumentation ... Guaranteed | (888) 88-SOURCE | www.artisantg.com

When using the SU command to change the address of a module, be sure to record the new address in a place that is easily retrievable. The only way to communicate with a module with an unknown address is with the Default Mode.

The most significant bit of byte 1 (bit 7) must be set to ‘0’. In addition, there are six ASCII codes that are illegal for use as an address. These codes are $00, $0D, $24, $23, $7B, $7D which are ASCII codes for the characters NUL, CR, $, #, { and }. Using these codes for an address will cause an ADDRESS ERROR and the setup data will remain unchanged. This leaves a total of 122 possible addresses that can be loaded with the SU command. It is highly recommended that only ASCII codes for printable characters be used ($21 to $7E) which greatly simplifies system debugging with a dumb terminal. Refer to Appendix A for a list of ASCII codes. Table 5.1 lists the printable ASCII codes that may be used as addresses.

Table 5.1 Byte 1 ASCII Printable Characters.

HEX	ASCII	HEX	ASCII	HEX	ASCII	HEX	ASCII
21	!	3A	:	51	Q	68	h
22	“	3B	;	52	R	69	i
25	%	3C	<	53	S	6A	j
26	&	3D	=	54	T	6B	k
27	‘	3E	>	55	U	6C	l
28	(	3F	?	56	V	6D	m
29	)	40	@	57	W	6E	n
2A	*	41	A	58	X	6F	o
2B	+	42	B	59	Y	70	p
2C	,	43	C	5A	Z	71	q
2D	-	44	D	5B	[	72	r
2E	.	45	E	5C	\	73	s
2F	/	46	F	5D	]	74	t
30	0	47	G	5E	^	75	u
31	1	48	H	5F	_	76	v
32	2	49	I	60	‘	77	w
33	3	4A	J	61	a	78	x
34	4	4B	K	62	b	79	y
35	5	4C	L	63	c	7A	z
36	6	4D	M	64	d	7B	{
37	7	4E	N	65	e	7C	|
38	8	4F	O	66	f	7D	}
39	9	50	P	67	g	7E	~

Artisan Technology Group - Quality Instrumentation ... Guaranteed | (888) 88-SOURCE | www.artisantg.com

Byte 2

Byte 2 is used to configure some of the characteristics of the communications channel; linefeeds, parity, and baud rate.

Linefeeds

The most significant bit of byte 2 (bit 7) controls linefeed generation by the module. This option can be useful when using the module with a dumb terminal. All responses from the D1000 are terminated with a carriage return (ASCII $0D). Most terminals will generate a automatic linefeed when a carriage return is detected. However, for terminals that do not have this capability, the D1000 module can generate the linefeed if desired. By setting bit 7 to '1' the module will send a linefeed (ASCII $0A) before and after each response. If bit 7 is cleared (0), no linefeeds are transmitted.

When using the '#' command prompt, the linefeed characters are not included in the checksum calculation.

Parity

Bits 5 and 6 select the parity to be used by the module. Bit 5 turns the parity on and off. If bit 5 is '0', the parity of the command string is ignored and the parity bit of characters transmitted by the module is set to '1'.

If bit 5 is '1', the parity of command strings is checked and the parity of characters output by the module is calculated as specified by bit 6.

If bit 6 is '0', parity is even; if bit 6 is '1', parity is odd.

If a parity error is detected by the module, it will respond with a PARITY ERROR message. This is usually caused by noise on the communications line.

If parity setup values are changed with the SU command, the response to the SU command will be transmitted with the old parity setup. The new parity setup becomes effective immediately after the response message from the SU command.

Baud Rate

Bits 0-3 specify the communications baud rate. The baud rate can be selected from ten values between 300 and 115200 baud. Refer to Table 5.2 for the desired code.

The baud rate selection is the only setup data that is not implemented directly after an SU command. In order for the baud rate to be actually changed, a module reset must occur. A reset is performed by sending a Remote Reset (RR) command (see Communications) or powering down. This extra level of write protection is necessary to ensure that communications to the module is not accidently lost. This is very important when

Artisan Technology Group - Quality Instrumentation ... Guaranteed | (888) 88-SOURCE | www.artisantg.com

changing the baud rate of an RS-232C string. For more information on changing baud rate, refer to Chapter 3.

Let's run through an example of changing the baud rate. Assume our sample module contains the setup data value of '31070080'. Byte 2 is '07'. By referring to the SU command chart we can determine that the module is set for no linefeeds, no parity, and baud rate 300. If we perform the Read Setup command with this module we would get:

Command: **$1RS**
Response: ***31070080**

Let's say we wish to change the baud rate to 9600 baud. The code for 9600 baud is '0010' (from Table 5.2). This would change byte 2 to '02'. To perform the SU command we must first send a Write Enable command because SU is write protected:

Command: **$1WE**
Response: ***

Command: **$1SU31020080**
Response: ***

This sequence of messages is done in 300 baud because that was the original baud rate of the module. The module remains in 300 baud after this sequence. We can use the Read Setup (RS) command to check the setup data:

Command: **$1RS**
Response: ***31020080**

Notice that although the module is communicating in 300 baud, the setup data indicates a baud rate of 9600 (byte 2 = '02'). To actually change the baud rate to 9600, send a Remote Reset (RR) command (RR is write protected):

Command: **$1WE**
Response: ***

Command: **$1RR**
Response: ***

Up to this point all communications have been sent at 300 baud. The module will not respond to any further communications at 300 baud because it is now running at 9600 baud. At this point the host computer or terminal must be set to 9600 baud to continue operation.

If the module does not respond to the new baud rate, most likely the setup data is incorrect. Try various baud rates from the host until the module

Artisan Technology Group - Quality Instrumentation - Guaranteed | (888) 88-SOURCE | www.artisan-scientific.com

responds. The last resort is to set the module to Default Mode where the baud rate is always 300.

Setting a string of RS-232C modules to a new baud rate requires special consideration. Refer to Chapter 3 for instructions.

Bit 4

Bit 4 is used to enable or disable extended addressing mode.

Table 5.2 Byte 2: Linefeed, Parity, Addressing and Baud Rate.

FUNCTION	DATA BIT							
	7	6	5	4	3	2	1	0
LINEFEED	1							
NO LINEFEED	0							
NO PARITY		0	0					
NO PARITY		1	0					
EVEN PARITY		0	1					
ODD PARITY		1	1					
NORMAL ADDRESSING				0				
EXTENDED ADDRESSING				1				
115200 BAUD					1	0	0	0
57600 BAUD					1	0	0	1
38400 BAUD					0	0	0	0
19200 BAUD					0	0	0	1
9600 BAUD					0	0	1	0
4800 BAUD					0	0	1	1
2400 BAUD					0	1	0	0
1200 BAUD					0	1	0	1
600 BAUD					0	1	1	0
300 BAUD					0	1	1	1

Byte 3

This byte contains the setup information for several seldom-used options. The default value for this byte is ‘01’.

Alarm Enable

Bit 7 determines if the outputs from the LO and HI alarms are connected to module terminal block. If the value is ‘0’ the alarms are not connected to the terminal block. In this condition the outputs are controlled by the Digital Output (DO) command. If bit 7 is ‘1’ the alarms are connected to the terminal block. This bit is also controlled by the Enable Alarms (EA) command which sets the bit to ‘1’. The Disable Alarms (DA) command clears the bit to ‘0’.

Low Alarm Latch

Bit 6 determines whether the LO Alarm is latching or momentary. A ‘1’ indicates that the alarm is latching; ‘0’ indicates a momentary alarm. Bit 6 is also controlled by the LO Alarm (LO) command.

Artisan Technology Group - Quality Instrumentation - Guaranteed | (888) 88-SOURCE | www.artisan-scientific.com

High Alarm Latch
Bit 5 determines whether the HI Alarm is latching or momentary. A'1' indicates latching. Bit 5 is also controlled individually by the HI Alarm (HI) command.

Disable CJC
RTD 3/4 Wire
Trigger Edge Select
The setup information stored in bit 4 has different meanings depending on the D1000 model number.

Disable CJC; this function pertains only to the D1300 series of thermocouple input modules. If the bit is set to '1' the Cold Junction Compensation is disabled. The module calculates the temperature output with a fixed cold junction temperature of 0 degrees Celsius. This setup is useful for calibrating the module or in cases where remote CJC is used. Normally this bit is cleared to '0'.

RTD 3/4 Wire; this function pertains only to the D1400 series of RTD input modules. If the bit is set to '1', the module provides the correct lead-compensation calculation for 4-wire RTD's. If the bit is cleared to '0', the module calculates the correct lead compensation for 3-wire RTD's. Measurement errors may result if the module is not set to the correct sensor type. This function has no affect on D145X or D146X Thermistor inputs.

Celsius/Fahrenheit
The default scaling for temperature output modules is Celsius which is selected by making bit 3 = 0. To change the scaling to Fahrenheit, set bit 3 to '1'. All modules that do not have temperature output must have bit 3 cleared to zero. The scaling factors are operative only on the sensor data; HI and LO limits and setpoints must be modified by appropriate commands to reflect a scaling change (see Figure 2.1).

Echo
When bit 2 is set to '1', the D1000 module will retransmit any characters it has received on the communications line. This option is necessary to 'daisy-chain' multiple RS-232C modules. Echo is optional for systems with a single RS-232C module. Bit 2 must be cleared to '0' on RS-485 models. See Chapter 3 for a more complete description.

Delay
Bits 0 and 1 specify a minimum turn-around delay between a command and the module response. This delay time is useful on host systems that are not fast enough to capture data from quick-responding commands such as RD. This is particularly true for systems that use software UART's. The specified

Artisan Scientific - Quality Instrumentation Guaranteed | (888) 88-SOURCE | www.artisanscientific.com

delay is added to the typical command delays listed in the Software Considerations section of Chapter 3. Each unit of delay specified by bits 0 and 1 is equal to the amount of time required to transmit one character with the baud rate specified in byte 2. For example, one unit of delay at 300 baud is 33.3 mS; for 38.4 kilobaud the delay is 0.26 mS. The number of delay units is selectable from 0 to 6 as shown in Table 5.3.

In some systems, such as IBM BASIC, a carriage return (CR) is always followed by a linefeed (LF). The D1000 modules will respond immediately after a command terminated by a CR and will ignore the linefeed. To avoid a communications collision between the linefeed and the module response, the module should be setup to delay by 2 units.

Table 5.3 Byte 3 Options.

FUNCTION	DATA BIT							
	7	6	5	4	3	2	1	0
ALARMS OFF	0							
ALARMS ON	1							
HIGH ALARM MOMENTARY		0						
HIGH ALARM LATCHING		1						
LOW ALARM MOMENTARY			0					
LOW ALARM LATCHING			1					
CJC (D1300'S)				0				
NO CJC (D1300'S)				1				
3 WIRE (D1400'S)				0				
4 WIRE (D1400'S)				1				
CELSIUS					0			
FAHRENHEIT					1			
NO ECHO						0		
ECHO						1		
NO DELAYS							0	0
2 BYTE TIME DELAYS							0	1
4 BYTE TIME DELAYS							1	0
6 BYTE TIME DELAYS							1	1

Artisan Technology Group - Quality Instrumentation ... Guaranteed | (888) 88-SOURCE | www.artisantg.com

Byte 4

This setup byte specifies the number of displayed digits and the digital filter time constants.

Number of displayed digits

For ease of use, the data outputs of all modules are standardized to a common 7-digit output consisting of sign, 5 digits, decimal point, and two more digits. Typical output data looks like: +00100.00. However, best-case resolution of the A/D converter is 1 part in 32,768. In some cases, the resolution of the output format is much greater than the resolution of the measurement system. In such cases, the trailing digits of the response would display meaningless information. Bits 6 and 7 are used to insert trailing zeros into the output data to limit the output resolution and mask off meaningless digits.

Bit 7	**Bit 6**		
0	**0**	**XXXX0.00**	**(4 displayed digits)**
0	**1**	**XXXXX.00**	**(5 displayed digits)**
1	**0**	**XXXXX.X0**	**(6 displayed digits)**
1	**1**	**XXXXX.XX**	**(7 displayed digits)**

For example, the D1411 model for RTD's has 0.1 degree output resolution. The appropriate number of digits for this module is 6, to mask off the 0.01 digit which has no meaningful data. In some cases, the user may want to limit the output resolution to 1 degree. To do this, select bits 6 and 7 to display 5 digits. With this selection, the right-most two digits will always be set to '0'.

The number of displayed digits affects only data received from an RD or ND command.

Large Signal Filter, Bits 3,4,5
Small Signal Filter, Bits 0,1,2

The modules contain a versatile single-pole, low-pass digital filter to smooth out unwanted noise caused by interference or small signal variations. The digital filter offers many advantages over traditional analog filters. The filtering action is done completely in firmware and is not affected by component drifts, offsets, and circuit noise typically found in analog filters. The filter time constant is programmable through the SetUp (SU) command and can be changed at any time, even if the module is remote from the host.

The digital filter features separate time constants for large and small signal variations. The Large Signal Filter time constant is controlled by bits 3,4,5. This time constant is used when large signal variations are present on the input. The Small Signal Filter time constant is controlled by bits 0,1,2. This filter time constant is automatically selected when input signal variations are small. The microprocessor in the module automatically selects the correct

Artisan Technology Group - Quality Instrumentation ... Guaranteed | (888) 88-SOURCE | www.artisantg.com

filter constant after every A/D conversion. The constant selected depends on the magnitude of the change of the input signal and the setup for the number of digits displayed. The microprocessor always keeps the value of the last calculated output to compare to a new data conversion. If the new data differs from the last output by more than ten counts of the last displayed digit, the large signal time constant is used in the digital filter. If the result of the most recent A/D conversion differs from the last output value by less than ten counts of the last displayed digit, the small signal time constant is used. Let's look at an example:

The D1411 RTD module has a standard output resolution of 0.1 degrees. The standard number-of-displayed-digits setup for this module is 6 digits, from byte 4 of the setup data. Therefore, the large signal filter will be selected if a new input conversion differs from the previous value by > 1.0 degree:

Previous data	New data	Filter selected
+00100.00	+00100.50	small
+00100.00	+00101.50	large
+00100.00	+00099.90	small
+00100.00	+00098.90	large
-00050.50	-00050.00	small
-00050.50	-00060.00	small

If the number of displayed digits is changed to reduce output resolution, filter selection is also affected. If the number of displayed digits in the previous example is changed to 5, the output resolution becomes 1.0 degree.

In this case the large signal time constant is used if the new reading differs from the old by more than 10.0 degrees:

Previous data	New data	Filter selected
+00100.00	+00105.00	small
+00100.00	+00111.00	large
+00100.00	+00091.00	small
+00100.00	+00085.00	large
-00050.00	-00045.00	small
-00050.00	-00039.00	large

Large Signal Time Constant

The large signal filter time constant is specified by bits 3,4,5 of byte 4. It may be specified from 0 (no filter) to 16 seconds. The time constant for a first-order filter is the time required for the output to reach 63% of its final value for a step input.

Artisan Technology Group - Quality Instrumentation ... Guaranteed | (888) 88-SOURCE | www.artisantg.com

Small Signal Time Constant

Bits 0,1, 2 specify the filter time constant for small signals. Its values are similar to the ones for the large signal filter. Most sensors can benefit from a small amount of small signal filtering such as T = 0.5 seconds In most applications, the small signal time constant should be larger than the large signal time constant. This gives stable readings for steady-state inputs while providing fast response to large signal changes.

Table 5.4 Byte 4 Displayed Digits and Filter Time Constants.

BYTE 4

FUNCTION	DATA BIT							
	7	6	5	4	3	2	1	0
+XXXX0.00 DISPLAYED DIGITS	0	0						
+XXXXX.00 DISPLAYED DIGITS	0	1						
+XXXXX.X0 DISPLAYED DIGITS	1	0						
+XXXXX.XX DISPLAYED DIGITS	1	1						
NO LARGE SIGNAL FILTERING			0	0	0			
0.25 SECOND TIME CONSTANT			0	0	1			
0.5 SECOND TIME CONSTANT			0	1	0			
1.0 SECOND TIME CONSTANT			0	1	1			
2.0 SECOND TIME CONSTANT			1	0	0			
4.0 SECOND TIME CONSTANT			1	0	1			
8.0 SECOND TIME CONSTANT			1	1	0			
16.0 SECOND TIME CONSTANT			1	1	1			
NO SMALL SIGNAL FILTERING						0	0	0
0.25 SECOND TIME CONSTANT						0	0	1
0.5 SECOND TIME CONSTANT						0	1	0
1.0 SECOND TIME CONSTANT						0	1	1
2.0 SECOND TIME CONSTANT						1	0	0
4.0 SECOND TIME CONSTANT						1	0	1
8.0 SECOND TIME CONSTANT						1	1	0
16.0 SECOND TIME CONSTANT						1	1	1

Setup Hints

Until you become completely familiar with the SetUp command, the best method of changing setups is to change one parameter at a time and to verify that the change has been made correctly. Attempting to modify all the setups at once can often lead to confusion. If you reach a state of total confusion, the best recourse is to reload the factory setup shown in Table 5.5 and try again, changing one parameter at a time. Use the Read Setup (RS) command to examine the setup information currently in the module as a basis for creating a new setup.

For example: Assume you have a D1111 unit and you wish to set the unit

Artisan Technology Group - Quality Instrumentation ... Guaranteed | (888) 88-SOURCE | www.artisantg.com

to echo so that it may be used in a daisy-chain (See Communications). Read out the current setup with the Read Setup command:

Command: **$1RS**
Response: ***310701C2**

By referring to Table 5.3, we find that the echo is controlled by bit 2 of byte 3. From the RS command we see that byte 3 is currently set to 01. This is the hexadecimal representation of binary 0000 0001. To set echo, bit 2 must be set to '1'. This results in binary 0000 0101. The new hexadecimal value of byte 3 is 05. To perform the SU command, use the data read out with the RS command, changing only byte 3:

Command: **$1WE (SU is write-protected)**
Response: ***

Command: **$1SU310705C2**
Response: ***

Verify that the module is echoing characters and the setup is correct.

By using the RS command and changing one setup parameter at a time, any problems associated with incorrect setups may be identified immediately. Once a satisfactory setup has been developed, record the setup value and use it to configure similar modules.

If you commit an error in using the SetUp command, it is possible to lose communications with the module. In this case, it may be necessary to use the Default Mode to re-establish communications.

The DA, EA, HI, and LO commands affect some of the bits of the setup data that are associated with alarms. If these commands are performed, the setup data read back with the Read Setup command may not correspond exactly with the data previously written with the SetUp command.

Table 5.5 Factory Setups by Model.
(All modules from the factory are set for address '1', 300 baud, no parity)

Model	Setup Message
D111X, D115X, D121X, D123X, D125X	310701C2
D112X, D124X	31070182
D110X, D113X, D114X	31070142
D13XX, D155X, D156X	31070142
D141X, D142X, D143X, D146X	31070182
D145X, D15XX	310701C2
D16XX	310701C0
D170X	31070100

Artisan Technology Group - Quality Instrumentation ... Guaranteed | (888) 88-SOURCE | www.artisantg.com

Chapter 6
Digital I/O Functions

The D1000 series features versatile digital I/O capability to interface to auxiliary equipment. The functions available are:

1) Digital Outputs
2) Digital Inputs
3) Alarm Outputs
4) Events Counter

Digital Outputs

A digital output consists of an open-collector transistor controlled by the host, using the Digital Output (DO) command (See Figure 6.1). The number of digital outputs implemented depends on the specific D1000 model number. Most sensor modules contain two digital outputs and the D1701/2 has eight digital outputs. The open-collector configuration is used to provide maximum versatility in interfacing to solid state relays (SSR's) or to standard logic levels such as TTL or CMOS. Each digital output can sink up to 30mA and can withstand up to 30V. Power in the transistor must be limited to 300mW. The emitter of each transistor is tied to the GND terminal on the input connector.

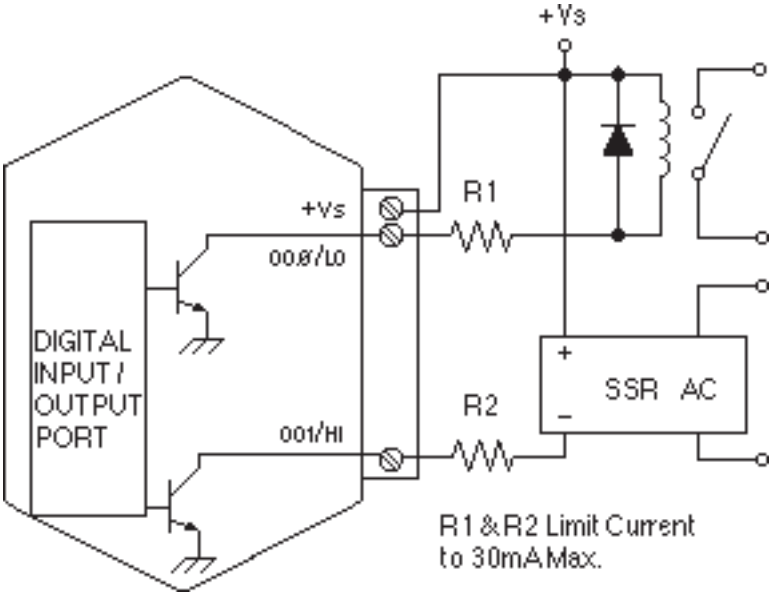

Figure 6.1 Digital Outputs Used With Relays

A typical connection of a digital I/O output is shown in Figure 6.1. In this case, a solid state relay is controlled by the D1000 module. The SSR can then be used to control AC power to alarms, heaters, pumps, etc. A typical

Artisan Technology Group - Quality Instrumentation ... Guaranteed | (888) 88-SOURCE | www.artisantg.com

connection to a logic input is shown in Figure 6.2. In some cases, the common-mode voltage of the GND terminal may be significantly different from the ground potential of the logic input to be interfaced. This may occur when the module is powered remotely. In this case, an opto-isolator may be used to eliminate the common-mode voltage. See Figure 6.2. In all cases, the current switched by the transistor may not be more than 30mA.

Only three commands can effect the Digital Output. The Enable Alarms (EA) and Disable Alarms (DA) commands select the function of the DOØ/LO and DO1/HI pin outputs. To route digital outputs to these pins, use the Disable Alarms (DA) command. The Enable Alarms (EA) command configures these two pins as alarm outputs. The Enable Alarms and Disable Alarms commands do not affect the other digital outputs, DO2-DO7. The digital outputs are controlled by the host with the Digital Output (DO) command.

If the module loses power, the digital outputs are turned off. The outputs will remain off until switched by a Digital Output (DO) command. The function of the shared pins, DOØ/LO and DO1/HI is not affected if power is lost, since this information is stored in nonvolatile memory.

The digital outputs are not affected by the Remote Reset (RR) command.

Digital Inputs

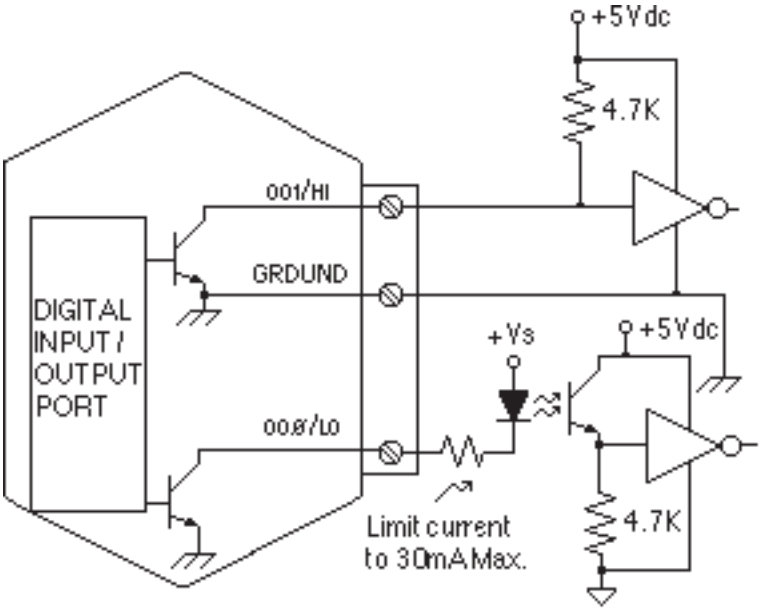

Figure 6.2 Digital Outputs Used With Logic

Artisan Technology Group - Quality Instrumentation ... Guaranteed | (888) 88-SOURCE | www.artisantg.com

Digital inputs are used to sense switch closures and the state of digital signals. The inputs are protected to voltages up to ±30V and are normally pulled up to the logic “1” condition (see Figure 6.3). Digital inputs can be read by the Digital Input (DI) command. Voltage inputs less than 1 V are read back as ‘0’. Signals greater than 3.5 V are read as ‘1’. No other commands have any affect on the inputs.

Switch closures can be read by the digital input by simply connecting the switch between GND terminal and a digital input. Internal pull-ups are used so additional parts are unnecessary.

The pull-ups supply only 0.5ma; therefore, self-wiping switches designed for low current operation should be used. For other types of switches, it may be necessary to provide extra pull-up current with an external resistor. The resistor should be tied between the switch and +V.

Connection to logic outputs is shown in Figure 6.2. Opto-isolation is used for isolation and where common-mode exists between the D1000 module and the signal being sensed.

Digital inputs may be used to sense AC voltages by using isolated sensing modules offered by many manufacturers.

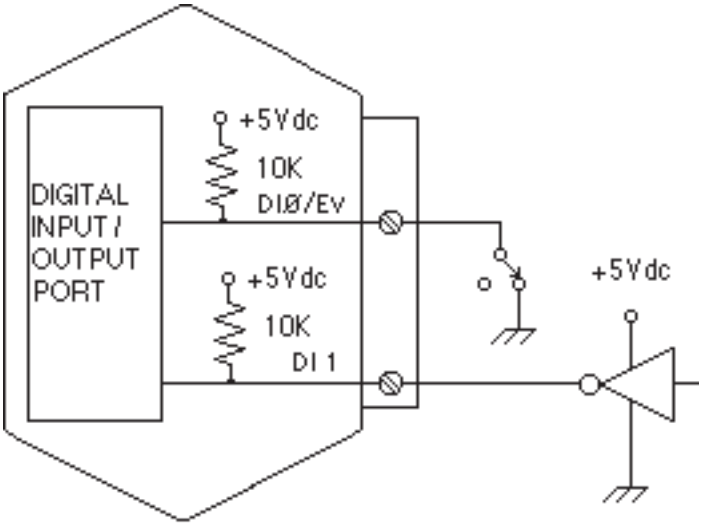

Figure 6.3 Digital Inputs

Event Counter

The Event Counter input is connected to the Digital Input 0 terminal. It can be used to count any low speed event that occurs on the DIØ/EV input. Any of the interfacing techniques described for Digital Inputs may be used. The input pulses must meet the specifications in Figure 6.4 to avoid missing counts. Switch inputs are filtered to eliminate contact bounce.

Artisan Technology Group - Quality Instrumentation ... Guaranteed | (888) 88-SOURCE | www.artisantg.com

The Event Counter is read by using the Read Events (RE) command. The maximum accumulated count is 9,999,999. If the maximum count is reached, counting stops. The Event Counter may be cleared to zero with the Clear Events (CE)or Events Read & Clear (EC) command.

The Event Counter is not nonvolatile and the count will be lost if power to the module goes down. Upon power up, the counter is cleared to zero. The Remote Reset (RR) command or a line break will not affect the counter.

ALARM OUTPUTS

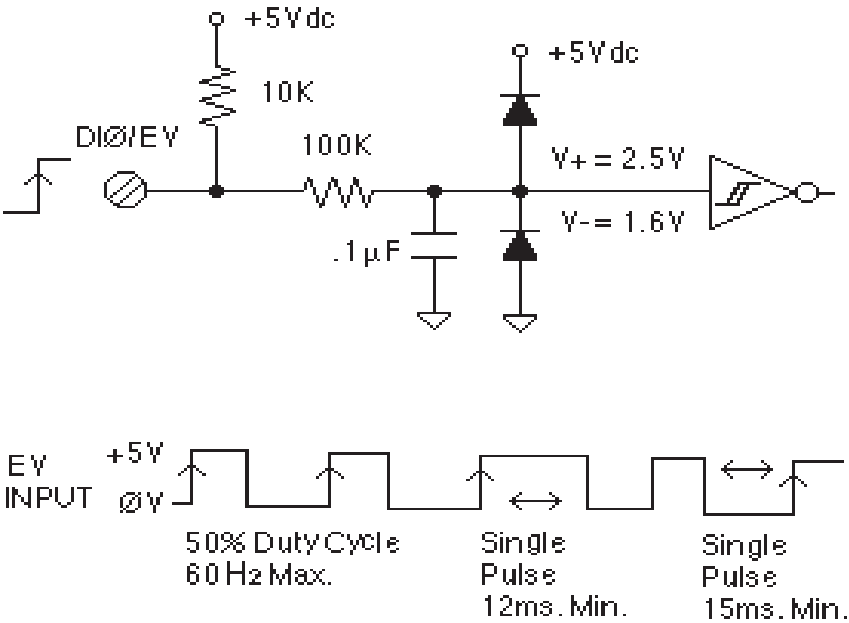

Figure 6.4 Events Counter Circuit

The D1000 sensor input modules perform HI/LO limit checking by comparing the sensor input value to downloaded HI/LO limit values stored in memory (see HI and LO commands). The result of the limit check can be used to control special HI and LO digital outputs.

The DOØ/LO and DO1/HI output pins can be configured to be alarm outputs by using the Enable Alarms (EA) command. After performing an EA command, the state of the DOØ/LO and DO1/HI pins will be controlled by the alarm settings. The EA command does not affect the other digital outputs, DO2-DO8. The Disable Alarms (DA) command is used to disconnect the alarms from the output pins whereupon they are controlled by the Digital Output (DO) command.

Since the Alarm Outputs share the same circuits with the Digital Outputs, all electrical interfacing considerations are the same.

Artisan Technology Group - Quality Instrumentation ... Guaranteed | (888) 88-SOURCE | www.artisantg.com

Alarm limit values are loaded into the module with the Low limit (LO) and Hi limit (HI) commands. The limit values are stored in nonvolatile memory so they will not be lost when power is removed. The HI and LO commands are also used to specify whether the alarms are momentary or latching. If an alarm is specified as momentary, the alarm is activated as long as the alarm condition exists. The alarm output will turn off when the input is within limits. A Latching alarm is activated when the specified limit is exceeded and will remain on even if the input value returns within limits. A Latching alarm can be turned off with the Clear Alarms (CA) command. The HI alarm output is turned on (sinking current) when the measured sensor input is greater than the high limit loaded in with the HI command. The LO alarm output is turned on (sinking current) when the input value is less than the stored low limit.

The alarm limit values may be read back at any time using the Read Low (RL) or Read High (RH) commands.

ON-OFF CONTROLLERS

The alarm capabilities of the D1000 sensor-input modules may be utilized to construct simple ON-OFF controllers that operate without host intervention. In fact, since all the alarm information is stored in nonvolatile memory, the module can act as a stand-alone controller with the communications lines disconnected.

The simplest controller connection is to use a momentary alarm output to control the process. A typical application would have a temperature input module controlling a heater, as shown in Figure 6.5. To maintain a constant temperature, set the low limit to the setpoint desired and specify the alarm output to be momentary. Use the LO alarm output to control the heater. If the temperature measurement exceeds the low limit, the heater will be turned off. When the temperature goes below the limit, the LO alarm output goes on, turning on the heater. The negative feedback action of the control output will keep the temperature at the desired value. The high limit is still available to activate an alarm or shut down the system if the temperature goes out of limit.

Artisan Technology Group - Quality Instrumentation ... Guaranteed | (888) 88-SOURCE | www.artisantg.com

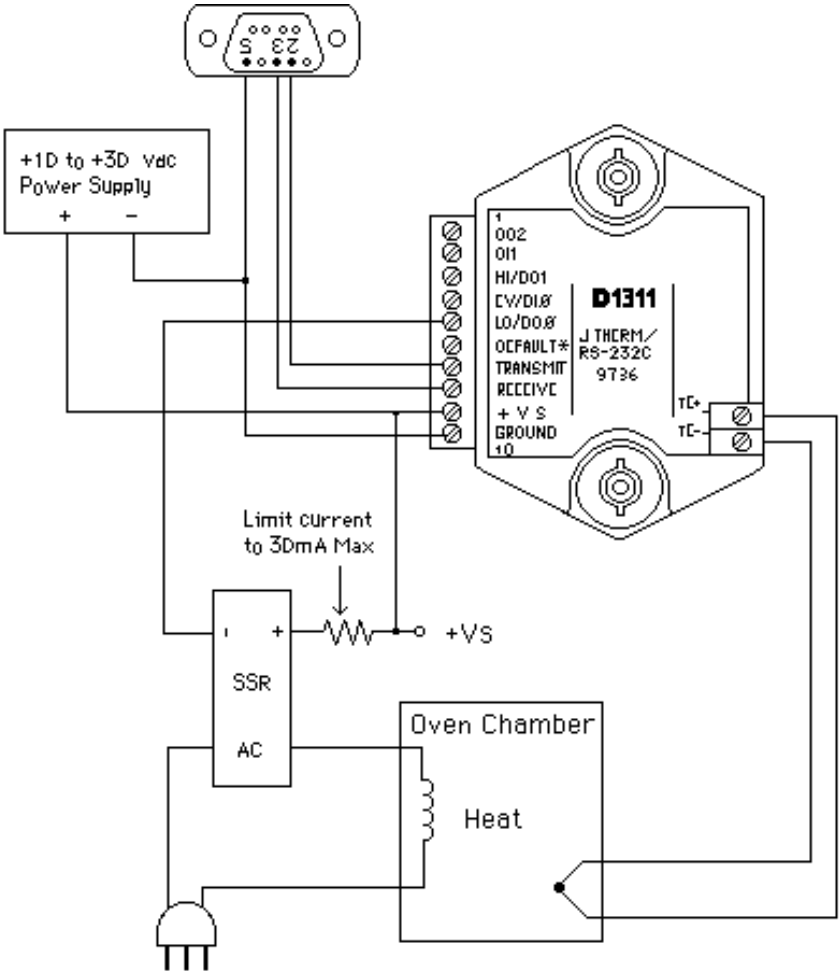

Figure 6.5 On-Off Controller

ON-OFF CONTROLLER WITH HYSTERESIS

The simple single-value controller, by its very nature, suffers from erratic output that may not be acceptable, particularly when high-power equipment is being controlled. To lengthen the control cycle and to make the control action smoother, hysteresis (dead band) is often used in on-off controllers. With hysteresis, the process variable is controlled between the two setpoints in order to lengthen the duty cycle of the control output. To increase the control duty cycle, the hysteresis, or difference between the setpoints, must be increased. Figure 6.6 shows the effect of hysteresis on the control output.

Artisan Technology Group - Quality Instrumentation ... Guaranteed | (888) 88-SOURCE | www.artisantg.com

The high and low alarm limits on the D1000 sensor modules may be set to provide on-off control with hysteresis. The two limits specify the two control setpoints. The difference between the high limit and the low limit is the hysteresis value. The high limit must be greater than the low limit for proper operation. The alarm output used to control the process must be set to the Latching mode. If the control output is turned on, it will remain on until the input data exceeds the second alarm value. At this point the control output is turned off.

A typical example of a controller with hysteresis is illustrated in Figure 6.5. A J-Thermocouple input module such as a D1311 maybe used to regulate the temperature of an oven. The thermocouple is used to sense the oven temperature. The LO alarm output controls a solid state relay (SSR) which in turn controls the oven heater. The Enable Alarms (EA) command must be used to activate the alarm outputs. In this case the desired regulated temperature is 100°C. The Lo alarm is set to 95°C in the latching mode with the LO command. The HI alarm command is used to set the upper limit to 105°C in the momentary mode. The total hysteresis is the difference between the two alarm values, or 10°C. In the steady state condition, the oven temperature will oscillate between 95°C and 100°C (ideally).

Assume the oven temperature is below 95°C. This value is less than the value loaded into the low limit, therefore the LO alarm output is turned on. Since the low alarm is set for latching mode, the control output stays on even as the oven temperature goes above the 95°C low limit. The control output will stay on until the temperature reaches the value loaded into the high limit, in this case 105°C. At this point the latched LO alarm is turned off, turning off the heater. The control output will remain off as the oven cools down through heat losses. When the oven cools to 95°C, the LO alarm is again turned on, and the control process repeats indefinitely. The control signals are shown in Figure 6.6.

In this case the high alarm was set to momentary mode. The high alarm could have been set to the latching mode without affecting the LO alarm output. However, the output at the HI alarm terminal would change. If the high alarm is set to Latching, the alarm output is simply the complement of the LO alarm. Either alarm output may be used for control depending on which one will result in negative feedback. For example, in a refrigeration system, the HI output may be used to control the refrigeration compressor and the low alarm value is used only to set the desired hysteresis value.

Artisan Technology Group - Quality Instrumentation ... Guaranteed | (888) 88-SOURCE | www.artisantg.com

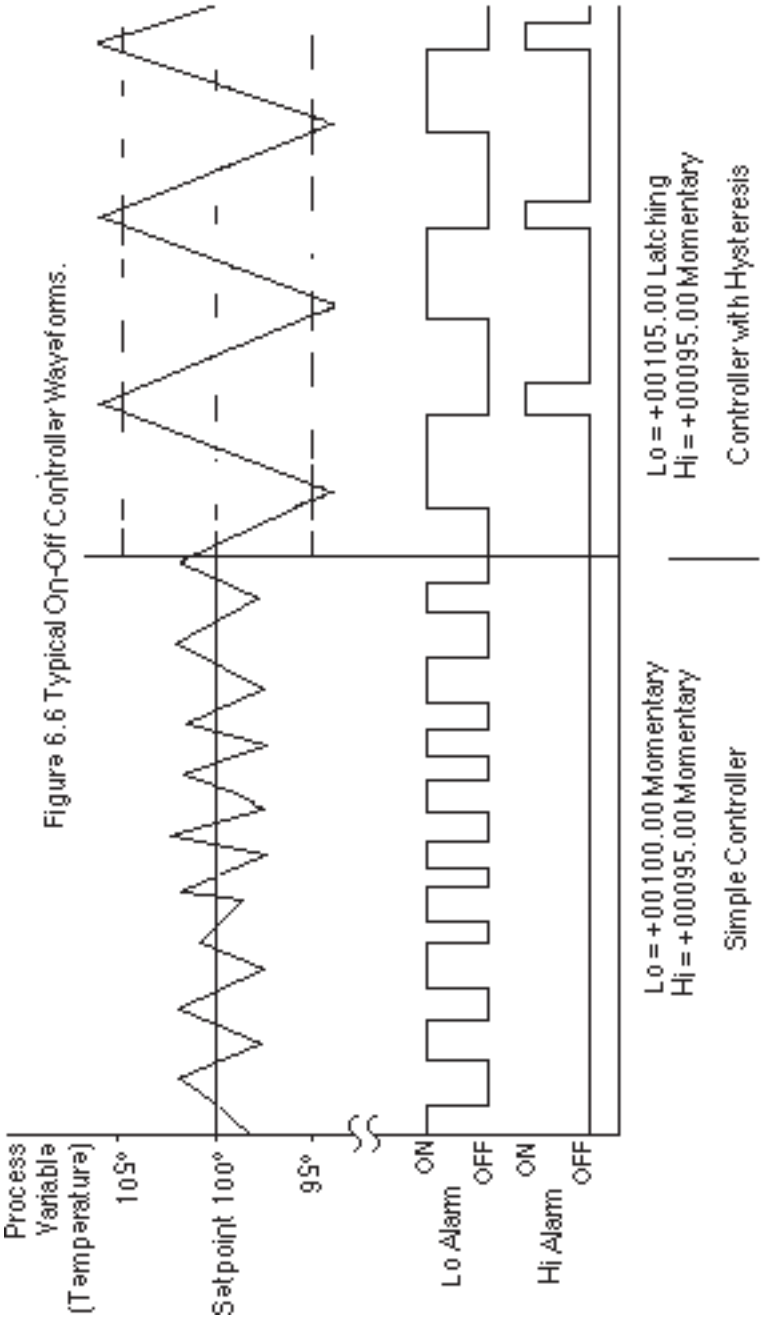

Figure 6.6 Typical On-Off Controller Waveforms.

Artisan Technology - Quality Instrumentation Guarantee | (888) 88-SOURCE | www.artisantg.com

SETPOINT

In the preceding example, the low and high alarm limits are used to specify a hysteresis value around a desired setpoint. To change the desired setpoint, both the low and high alarm values must be changed. In this type of controller operation, the Read Data (RD) or New Data (ND) commands will read out the actual value of the process variable.

The D1000 modules provide a means of downloading a setpoint value without affecting the desired hysteresis by using the Setpoint (SP) command. The Setpoint command is used to load the desired control value into the output offset register (see Figure 2.1). The value in the output offset register is always added to the data derived from the sensor input. For instance, if the sensor data is +00100.00 and the output offset register contains +00050.00, a Read Data command will yield an output of +00150.00. The Setpoint command loads a value into the offset register to null out the sensor data. If the command $1SP+00100.00 is given to a module with address 1, the effect of the command is to load the output offset register with -00100.00. An RD command will now result in the deviation of the input data from the downloaded setpoint value.

A careful look at Figure 2.1 will reveal that the alarm limits are checked after the output offset is added the input data. To construct a controller using the SP command, the high and low alarms must be loaded with the hysteresis values referred to the deviation from the setpoint value. In the oven controller example, the hysteresis was set to ±5°C from the desired control temperature of 100°C. When using the SP command, the high limit would be set to +00005.00 and the low limit would be set to -00005.00 to get the same hysteresis affect. The Latching modes of the alarm limits are used in the same manner as previously described.

Let's look at the oven controller again using the Setpoint command. The desired oven temperature is 100°C. This time we'll use the SP command to load the 100°C value into the temperature module. As before, we would like a hysteresis band of ±5°C from the nominal temperature of 100°C. In this case, set the low limit to -00005.00 latching and the high limit to +00005.00. The high and low limits are now used solely to define the hysteresis band. If the oven temperature is low, say 90°C, the resulting deviation from the setpoint of 100°C is -10°C. This value exceeds the low limit and the LO alarm control output is turned on to activate the heater. The latched LO alarm will stay on until the measured temperature exceeds 105°C. At this point the deviation from the setpoint is greater than ±5°C, the value loaded into the high limit. When the high limit is exceeded, the latched LO alarm output is turned off, turning off the heater. The control action is identical to the controller described in Figure 6.6.

Artisan Technology Group - Quality Instrumentation ... Guaranteed | (888) 88-SOURCE | www.artisantg.com

The benefit of using SP command is that only one command is necessary to change the setpoint value. The hysteresis is stored in the HI and LO alarm registers and does not have to be changed when a new setpoint is used.

The SP command makes it particularly easy to construct a controller whose setpoint is a time varying function downloaded from a host computer. The SP command can also be used without control functions whenever a deviation output is desired.

The setpoint value may be read back by using the Read Zero (RZ) command. The RZ simply reads back the contents of the output offset register. The RZ command will always read back the setpoint value with the sign changed.

The setpoint value is stored in the same register as the output offset trim (see TZ command). In cases where the output offset register is used to hold a calibration trim value, the SP command will erase the trim. In most cases, an offset calibration trim is not necessary and the trim value would read back as +00000.00 using the Read Zero (RZ) command. If the trim is non-zero, it must be read and stored by the host before the SP command is executed. To download setpoint values the host must then subtract the trim value from the desired setpoint to derive the proper data for the SP command. To restore the trim, use the SP command to download the negative of the trim that was previously read back with the RZ command.

Artisan Technology Group - Quality Instrumentation ... Guaranteed | (888) 88-SOURCE | www.artisantg.com

Chapter 7
Power Supply

D1000 modules may be powered with an unregulated +10 to +30Vdc. Power-supply ripple must be limited to 5V peak-to-peak, and the instantaneous ripple voltage must be maintained between the 10 and 30 volt limits at all times. The modules contain a low voltage detection circuit that shuts down all circuits in the module at approximately 9.5 Vdc. All power supply specifications are referred to the module connector; the effects of line voltage drops must be considered when the module is powered remotely.

All D1000 modules employ an on-board switching regulator to maintain good efficiency over the 10 to 30 volt input range; therefore the actual current draw is inversely proportional to the line voltage. D1000 modules without sensor excitation consume a maximum of .75 watts and this figure should be used in determining the power supply current requirement. For example, assume a 24 volt power supply will be used to power four modules. The total power requirement is 4 X .75 = 3 watts. The power supply must be able to provide 3 / 24 = 0.125 amps.

For modules with sensor excitation, consult individual data sheets for power requirements.

The low voltage detection circuit shuts down the module at approximately 9.5Vdc. If the module is interrogated while in a low power supply condition, the module will not respond. Random NOT READY error messages could indicate that the power supply voltage is periodically drooping below the 10V minimum.

In some cases, a small number of modules may be operated by “stealing” power from a host computer or terminal.

Small systems may be powered by using wall-mounted calculator-type modular power supplies. These units are inexpensive and may be obtained from many retail electronics outlets.

Artisan Scientific - Quality Instrumentation Guaranteed | (888) 88-SOURCE | www.artisanscientific.com

Chapter 8
Troubleshooting

Symptom:
RS-232 Module is not responding to commands
RS-485 Module is not responding to commands
Events counter not counting properly.
Error in displayed value.
Read Data (RD) values are factor of two times normal values.
Module responds with ?1 COMMAND ERROR to every command.
Characters in each response message appear as graphics characters

• RS-232 Module is not responding to commands

1. Using a voltmeter, measure the power supply voltage at the +Vs and GND terminals to verify the power supply voltage is constantly between +10 and +30Vdc.

2. Verify using an ohmmeter that there are no breaks in the communications data lines.

3. Connect the module to the host computer and power-up each device (module and computer) then using a voltmeter measure the voltage between RECEIVE and GND. This voltage should be approximately - 10Vdc. Repeat the measurement between TRANSMIT and GND terminals and confirm the voltage value to be approximately -10Vdc. If either of the two readings is approximately 0.0Vdc then the communications data lines are wired backwards. Proper communications levels on both TRANSMIT and RECEIVE terminals should idle at -10Vdc.

4. If you are using a serial communications converter (A1000) ensure that the communications Baud Rate switch is set to the proper Baud Rate value.

5. Confirm software communications settings in Host computer match those values being used by the connected module(s).

6. If the Baud Rate value being used in the application is greater than 300 Baud and the module will only communicate 300 Baud then make sure that the DEFAULT* terminal is not connected to Ground (GND).

7. If the module(s) are being used in a RS-232 daisy-chain communications configuration then ensure that the "Echo Bit" is enabled in the setup(SU) message of each module.

8. If the problem is not corrected after completing the steps above then connect the module by itself to a Host computer as outlined in Chapter 1.0 under "Quick Hook-up". Start the supplied Utility software and please call the factory for further assistance.

Artisan Scientific - Quality Instrumentation Guaranteed | (888) 88-SOURCE | www.artisanscientific.com

• RS-485 Module is not responding to commands

1. Perform steps 1, 2, 4, 5 and 6 listed above.

2. Ensure that module RS-485 "Data" line (module terminal pin #7) is connected to the Host RS-485 "Data+" line.

3. Ensure that module RS-485 "Data*" line (module terminal pin #8) is connected to the Host RS-485 "Data-" line.

4. If the problem is not corrected after completing the steps above then connect the module by itself to a Host computer as outlined in Chapter 1.0 under "Quick Hook-up". Start the supplied Utility software and please call the factory for further assistance.

• Events counter not counting properly.

1. Check that the frequency of the signal, being counted is less than 60Hz.

2. Ensure that the signal levels are swinging below +1.0Vdc and greater than +3.5Vdc.

• Error in displayed value

Make sure that the °C/°F bit is set to a 0. Otherwise the values will be scaled by the °F equation.

• Read Data (RD) values are factor of two times normal values

Ensure that the Degree C/Degree F bit in the setup (SU) message is set to Degree C.

• Module responds with ?1 COMMAND ERROR to every command

Ensure that characters in the command message are uppercase characters. All commands consist of uppercase characters only.

• Characters in each response message appear as graphics characters

1. Set the communications software parity setting to "M" for 'MARK' parity type and 7 data bits. Or, utilize any parity type in both the module and software other than "NO" parity.

2. In custom written software routines, mask off the most significant bit of each received character to logic "0". Thus forcing the received character to 7-bit ASCII value.

Chapter 9
Calibration

The D1000 module is initially calibrated at the factory and has a recommended calibration interval of one year. Calibration constants are stored in the EEPROM and may be trimmed using the Trim Span (TS) and Trim Zero (TZ) commands. There are no pots to adjust. Calibration procedure is as follows.

Voltage and current inputs: clear the output offset register using the Clear Zero (CZ) command. Zero trims are not neccessary due to the built-in auto-zero function. Apply a known calibrated voltage or current to the input of the module. The calibrated stimulus should be adjusted to be near 90% of the full scale output of the modules for best results. Obviously, the accuracy of the calibrated voltage or current must be better than the rated accuracy of the module, which in most cases is 0.02% of full scale. Use the Read Data (RD) command to obtain an output reading. If the output corresponds to the applied input, no calibration is necessary. If the output is in overload, check the circuit connections or use a different input value to obtain an output within the operating range of the module.

To trim the output, use the Trim Span (TS) command. The argument of the TS command should correspond to the desired module output. After performing the TS command, verify the trim with the RD command. For example to trim a D1121 module:

1. Clear the output offset register.

Command:	**$1WE**	
Response:	*****	**(CZ is write protected)**
Command:	**$1CZ**	
Response:	*****	

2. Apply an input voltage near 90% of rated full scale. In this case we will use a +900mV input voltage that is accurate to at least 0.02%. Obtain an output reading.

Command:	**$1RD**
Response:	***+00900.30**

In this case, the output of the module is off by 300µV. To trim:

Command:	**$1WE**	
Response:	*****	**(TS is write protected)**
Command:	**$1TS+00900.00**	
Response:	*****	

Artisan Technology Group - Quality Instrumentation ... Guaranteed | (888) 88-SOURCE | www.artisantg.com

This sequence will trim the output to +00900.00. Verify:

Command: **$1RD**
Response: ***+00900.00**

The module is calibrated.

Thermocouples: Disable the cold junction compensation by setting bit 4 in byte 3 of the setup data with the SetUp (SU) command. The module may now be calibrated using a known input voltage. Perform the calibration as described for a voltage input module. Table 9.1 gives recommended calibration points. Due to the nonlinear nature of thermocouples, it may be necessary to repeat the TS command to obtain the desired output. After calibration is complete, enable the cold junction compensation by clearing bit 4 in byte 3 of the setup data.

RTD: Use a calibrated resistor mounted directly on the module connector to avoid lead resistance errors. The resistor must be accurate to 0.01% for proper calibration. Recommended calibration points are listed in Table 9.1. Follow the command sequence described for voltage inputs to calibrate the module. Due to the nonlinear nature of RTD's it may be necessary to repeat the TS command to obtain the desired output.

Artisan Technology Group - Quality Instrumentation ... Guaranteed | (888) 88-SOURCE | www.artisantg.com

Table 9.1 Calibration Values

Model	Input Stimulus	Output Data	°F
D110X	+9000µV	+09000.00	
D111X	+90mV	+00090.00	
D112X	+900mV	+00900.00	
D113X	+4.5V	+04500.00	
D114X	+9V	+09000.00	
D115X	+90V	+00090.00	
D121X	+9000µA	+09000.00	
D122X	+900µA	+00900.00	
D123X	+90mA	+00090.00	
D124X	+900mA	+00900.00	
D125X	+20mA	+00020.00	
D131X	+39.13mV	+00700.00	+01292.00
D132X	+41.269mV	+01000.00	+01832.00
D133X	+17.816mV	+00350.00	+00662.00
D134X	+68.783mV	+01000.00	+01832.00
D135X	+17.445mV	+01500.00	+02732.00
D136X	+15.576mV	+01500.00	+02732.00
D137X	+10.094mV	+01500.00	+02732.00
D138X	+33.442mV	+01982.00	+03600.00
D141X	300.00Ω	+00558.00	+01036.40
D142X	300.00Ω	+00547.60	+01017.70
D143X	134.91Ω	+00115.00	+00239.00
D145X	206.1Ω	+00090.00	+00194.00
D146X	3018Ω	+00140.00	+00284.00
D151X	25mV	+00025.00	
D152X	25mV	+00025.00	
D153X	90mV	+00090.00	
D154X	90mV	+00090.00	
D155X	5.5V	+05500.00	
D156X	5.5V	+05500.00	
D160X	18Khz	+18000.00	
D161X	25 seconds	+25000.00	
D163X	9Khz	+09000.00	
D164X	25 seconds	+25000.00	

Chapter 10
Extended Addressing

The D1000 may be configured to a special command format called Extended Addressing. This mode uses a different prompt, either '{' or '}' to distinguish it from the regular command syntax. The major difference in syntax for the Extended Addressing mode is that it uses a two-character address. A typical command in Extended Address mode would look like this:

Command: **{01WE**
Response: ***

Both the command and response are terminated with carriage returns. Note that the command uses a two-character address, '01.'

There are two benefits to using Extended Addressing with the D1000:

1) Greatly expanded addressing capability.

2) Allow for a more structured addressing method in large systems.

With single-byte addressing of the normal command structure, address space is limited to 122 points. Extended addressing allows an addressing range of 249 points.

Structured Addressing
Even for a relatively small system, it can be advantageous to employ a hierarchical addressing system as used in Fig. 7.1. This is particularly true in systems that consist of many sites that are identical. From a host software standpoint, each site can be treated identically with the same module addresses, with each site having a different D1000 address.

Extended Address Syntax
The command syntax used with Extended Addressing is quite similar to the normal protocol. The Extended Address commands are initiated with a '{' character (left curly brace, ASCII $7B), or a '}' character (right curly brace, ASCII $7E). The '{' prompt is analogous to the '$' prompt in that it returns the shortest possible response to complete the command. The '}' prompt is similar to the '#' prompt in that the command is echoed and a checksum is generated along with the other data necessary to complete the response. The '*' response prompt is used in all command forms.

Artisan Technology Group - Quality Instrumentation ... Guaranteed | (888) 88-SOURCE | www.artisantg.com

The Extended Address commands use a two-character ASCII address, each character may be one of 122 legal possibilities. Illegal characters are: NULL ($00), CR ($0D), $ ($24), # ($23), { ($7B), and } ($7E).

Command examples with Extended Address '01':

Command:	**{01WE**	
Response:	*****	
Command:	**}01WE**	
Response:	***01WE27**	
Command:	**{01RS**	
Response:	***31070000**	**(typical)**
Command:	**}01RS**	
Response:	***01RS31070000BB**	**(typical)**

Checksums may be appended to commands:

Command:	**{01WE78**
Response:	*****

All commands that are available with single-byte addressing may be accessed with Extended Addressing, and vice-versa.

Artisan Scientific - Quality Instrumentation Guarantee - (888) 88-SOURCE | www.artisanscientific.com

Appendix A
ASCII Table

Table of ASCII characters (A) and their equivalent values in Decimal (D), Hexadecimal (Hex), andBinary.Claret (^) represents Control function.

A	D	Hex	Binary	D	Hex	Binary
^@	0	00	00000000	128	80	10000000
^A	1	01	00000001	129	81	10000001
^B	2	02	00000010	130	82	10000010
^C	3	03	00000011	131	83	10000011
^D	4	04	00000100	132	84	10000100
^E	5	05	00000101	133	85	10000101
^F	6	06	00000110	134	86	10000110
^G	7	07	00000111	135	87	10000111
^H	8	08	00001000	136	88	10001000
^I	9	09	00001001	137	89	10001001
^J	10	0A	00001010	138	8A	10001010
^K	11	0B	00001011	139	8B	10001011
^L	12	0C	00001100	140	8C	10001100
^M	13	0D	00001101	141	8D	10001101
^N	14	0E	00001110	142	8E	10001110
^O	15	0F	00001111	143	8F	10001111
^P	16	10	00010000	144	90	10010000
^Q	17	11	00010001	145	91	10010001
^R	18	12	00010010	146	92	10010010
^S	19	13	00010011	147	93	10010011
^T	20	14	00010100	148	94	10010100
^U	21	15	00010101	149	95	10010101
^V	22	16	00010110	150	96	10010110
^W	23	17	00010111	151	97	10010111
^X	24	18	00011000	152	98	10011000
^Y	25	19	00011001	153	99	10011001
^Z	26	1A	00011010	154	9A	10011010
^[	27	1B	00011011	155	9B	10011011
^\	28	1C	00011100	156	9C	10011100
^]	29	1D	00011101	157	9D	10011101
^^	30	1E	00011110	158	9E	10011110
^_	31	1F	00011111	159	9F	10011111
	32	20	00100000	160	A0	10100000
!	33	21	00100001	161	A1	10100001
“	34	22	00100010	162	A2	10100010

Artisan Technology Group - Quality Instrumentation ... Guaranteed | (888) 88-SOURCE | www.artisantg.com

A	D	Hex	Binary	D	Hex	Binary
#	35	23	00100011	163	A3	10100011
$	36	24	00100100	164	A4	10100100
%	37	25	00100101	165	A5	10100101
&	38	26	00100110	166	A6	10100110
‘	39	27	00100111	167	A7	10100111
(	40	28	00101000	168	A8	10101000
)	41	29	00101001	169	A9	10101001
*	42	2A	00101010	170	AA	10101010
+	43	2B	00101011	171	AB	10101011
,	44	2C	00101100	172	AC	10101100
-	45	2D	00101101	173	AD	10101101
.	46	2E	00101110	174	AE	10101110
/	47	2F	00101111	175	AF	10101111
0	48	30	00110000	176	B0	10110000
1	49	31	00110001	177	B1	10110001
2	50	32	00110010	178	B2	10110010
3	51	33	00110011	179	B3	10110011
4	52	34	00110100	180	B4	10110100
5	53	35	00110101	181	B5	10110101
6	54	36	00110110	182	B6	10110110
7	55	37	00110111	183	B7	10110111
8	56	38	00111000	184	B8	10111000
9	57	39	00111001	185	B9	10111001
:	58	3A	00111010	186	BA	10111010
;	59	3B	00111011	187	BB	10111011
<	60	3C	00111100	188	BC	10111100
=	61	3D	00111101	189	BD	10111101
>	62	3E	00111110	190	BE	10111110
?	63	3F	00111111	191	BF	10111111
@	64	40	01000000	192	C0	11000000
A	65	41	01000001	193	C1	11000001
B	66	42	01000010	194	C2	11000010
C	67	43	01000011	195	C3	11000011
D	68	44	01000100	196	C4	11000100
E	69	45	01000101	197	C5	11000101
F	70	46	01000110	198	C6	11000110
G	71	47	01000111	199	C7	11000111
H	72	48	01001000	200	C8	11001000
I	73	49	01001001	201	C9	11001001
J	74	4A	01001010	202	CA	11001010
K	75	4B	01001011	203	CB	11001011

Artisan Technology Group - Quality Instrumentation - Guaranteed | (888) 88-SOURCE | www.artisan-scientific.com

A	D	Hex	Binary	D	Hex	Binary
L	76	4C	01001100	204	CC	11001100
M	77	4D	01001101	205	CD	11001101
N	78	4E	01001110	206	CE	11001110
O	79	4F	01001111	207	CF	11001111
P	80	50	01010000	208	D0	11010000
Q	81	51	01010001	209	D1	11010001
R	82	52	01010010	210	D2	11010010
S	83	53	01010011	211	D3	11010011
T	84	54	01010100	212	D4	11010100
U	85	55	01010101	213	D5	11010101
V	86	56	01010110	214	D6	11010110
W	87	57	01010111	215	D7	11010111
X	88	58	01011000	216	D8	11011000
Y	89	59	01011001	217	D9	11011001
Z	90	5A	01011010	218	DA	11011010
[	91	5B	01011011	219	DB	11011011
\	92	5C	01011100	220	DC	11011100
]	93	5D	01011101	221	DD	11011101
^	94	5E	01011110	222	DE	11011110
_	95	5F	01011111	223	DF	11011111
‘	96	60	01100000	224	E0	11100000
a	97	61	01100001	225	E1	11100001
b	98	62	01100010	226	E2	11100010
c	99	63	01100011	227	E3	11100011
d	100	64	01100100	228	E4	11100100
e	101	65	01100101	229	E5	11100101
f	102	66	01100110	230	E6	11100110
g	103	67	01100111	231	E7	11100111
h	104	68	01101000	232	E8	11101000
i	105	69	01101001	233	E9	11101001
j	106	6A	01101010	234	EA	11101010
k	107	6B	01101011	235	EB	11101011
l	108	6C	01101100	236	EC	11101100
m	109	6D	01101101	237	ED	11101101
n	110	6E	01101110	238	EE	11101110
o	111	6F	01101111	239	EF	11101111
p	112	70	01110000	240	F0	11110000
q	113	71	01110001	241	F1	11110001
r	114	72	01110010	242	F2	11110010
s	115	73	01110011	243	F3	11110011
t	116	74	01110100	244	F4	11110100

Artisan Technology Group - Quality Instrumentation - Guaranteed | (888) 88-SOURCE | www.artisantg.com

A	D	Hex	Binary	D	Hex	Binary
u	117	75	01110101	245	F5	11110101
v	118	76	01110110	246	F6	11110110
w	119	77	01110111	247	F7	11110111
x	120	78	01111000	248	F8	11111000
y	121	79	01111001	249	F9	11111001
z	122	7A	01111010	250	FA	11111010
{	123	7B	01111011	251	FB	11111011
|	124	7C	01111100	252	FC	11111100
}	125	7D	01111101	253	FD	11111101
~	126	7E	01111110	254	FE	11111110
	127	7F	01111111	255	FF	11111111

Artisan Scientific - Quality Instrumentation Guarantee - (888) 88-SOURCE | www.artisan.com

The Frequency and Timer Input modules feature a versatile input stage that can be used in a variety of applications. Figure 1 is a block diagram of the input signal conditioning.

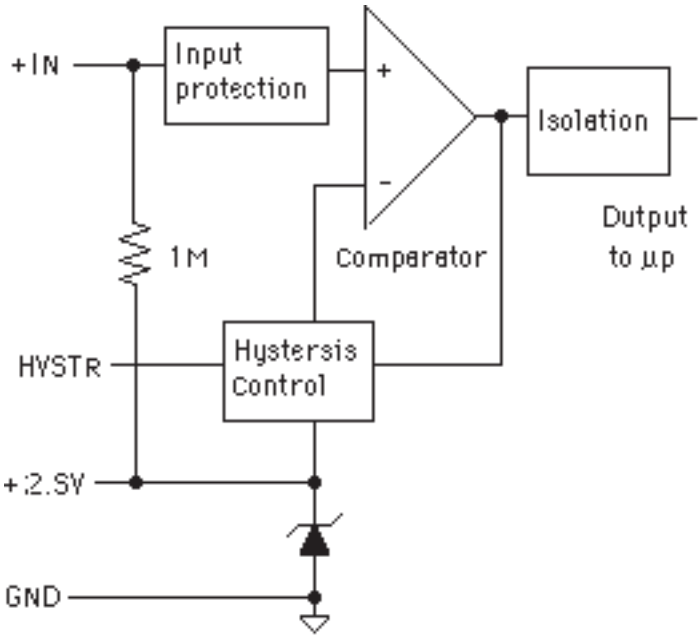

Figure B-1. D1601/2 Input Signal Conditioning Block Diagram.

The input signal is applied to a precision comparator through the + input. Input protection is provided to withstand inputs up to 230Vac. The comparator output is then fed through an opto-isolator to the module's microprocessor for scaling and formatting. The input section is completely isolated from the power and communications lines. The isolation allows up to 500V of common-mode voltage between the input ground and the power connections.

The input comparator employs hysteresis to provide reliable readings with noisy or slow input signals. The amount of hysteresis may be controlled by connecting the hysteresis control line (HYSTR) to ground or the 2.5V terminal through an external resistor. Figure 2 shows the most frequently used connection.

Artisan Technology Group - Quality Instrumentation ... Guaranteed | (888) 88-SOURCE | www.artisantg.com

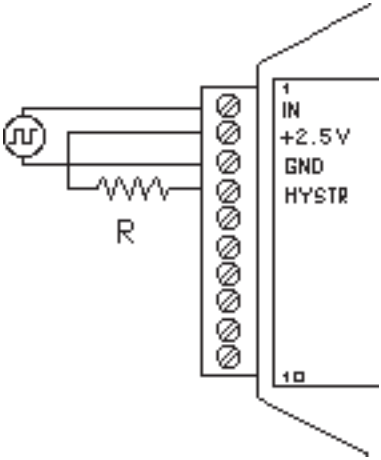

R	$V_{switching} \pm V_{hysteresis}$
Open	2.5V ± 0.5V
ØΩ	2.5V ± 5mV

For $V_{hysteresis}$ >5mV and <0.5V:

$$R\ (\text{in K}\Omega) = \frac{34\ V_{hysteresis}}{0.5 - V_{hysteresis}}$$

Figure B-2. Controlling Hysteresis For Positive-Going Signals

This connection is used for unipolar positive-going frequency signals. The hysteresis is centered around a +2.5V switching level. If R is left open, the switching levels are +3V and +2V, or 2.5V ±0.5V. If R is shorted, the hysteresis decreases with resulting switching levels of 2.5V ±5mV. Any hysteresis value from ±5mV to ±0.5V may be obtained by selecting an appropriate value for R. Figure B-2 shows the relationship between the hysteresis and R.

The input comparator may be setup for comparisons around zero volts by using the connections in Figure B-3. This connection is useful for AC or bipolar signals. Since the input section is isolated, the +2.5V pin may be connected to any signal with a common-mode voltage up to 500V. With the hysteresis control connected as in Figure B-3, the switching points occur symmetrically on either side of the +2.5V level. Since the low side of the input signal is connected to the +2.5V pin, the switching points appear to be symmetrical to zero, as referenced to the input signal. The hysteresis may be varied from ±5mV to ±0.5V as shown in Figure B-2.

Artisan Technology Group - Quality Instrumentation ... Guaranteed | (888) 88-SOURCE | www.artisantg.com

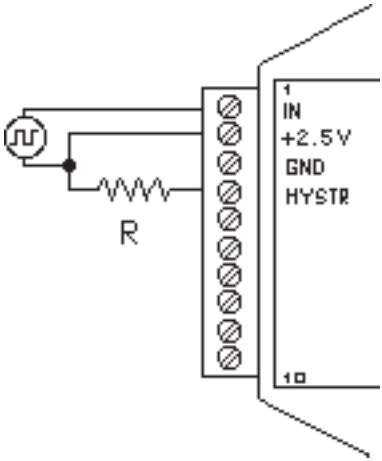

Figure B-3. Controlling Hysteresis For Bipolar Signals.

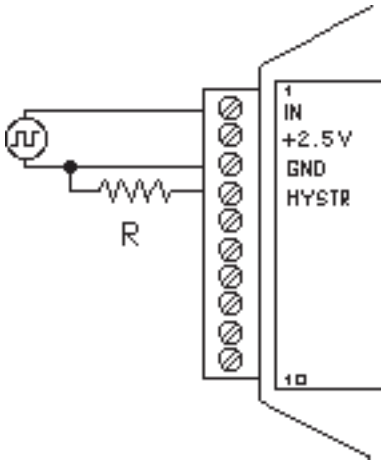

R	$V_{switching} \pm V_{hysteresis}$
Open	2.5V ± 0.5V
ØΩ	1.7V ± 5mV

For $V_{hysteresis}$ >5mV and <0.5V:

$$R\ (\text{in K}\Omega) = \frac{34\ V_{hysteresis}}{0.5 - V_{hysteresis}}$$

$$V_{switching} = 2.5 - \frac{14}{17 + R}$$

Figure B-4. Controlling Switching Level and Hysteresis.

The hysteresis control may also be connected to ground (GND), which produces another set of switching levels. This connection is shown in figure B-4. If the HYSTR terminal is shorted to GND the nominal switching point is 1.6V with ±5mV of hysteresis.

To measure AC signals super-imposed on a DC value, the input may be AC coupled by simply placing a capacitor in series with the +IN terminal. The

Artisan Technology Group - Quality Instrumentation ... Guaranteed | (888) 88-SOURCE | www.artisantg.com

module contains an internal 1MΩ resistor connected from the +IN to +2.5V for biasing. A .01 uf cap may be used for frequencies down to 10HZ.

D1630/D1640 Accumulator Modules

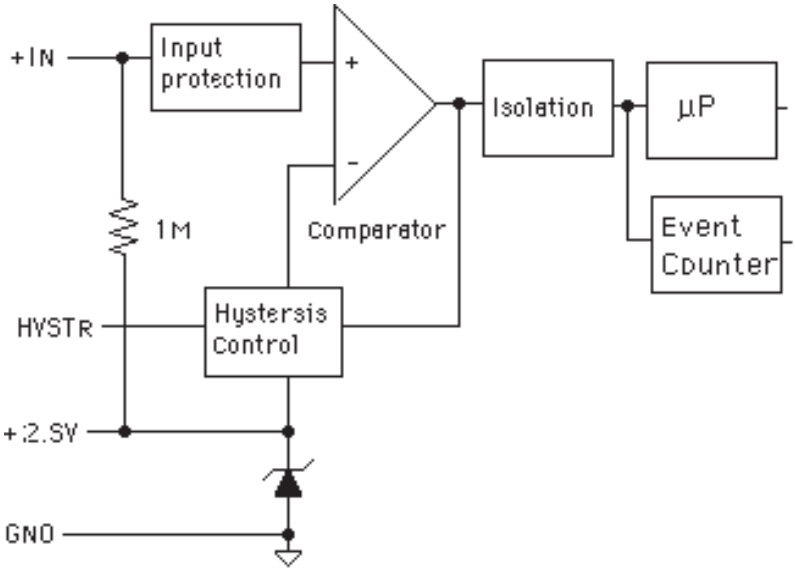

Figure B-5. Accumulator Block Diagram.

The Accumulator models are: D1631, D2631, D1632, D2632, D1641, D2641, D1642 and D2642 are designed for applications that require reading and accumulating pulse type information. They can accumulate the output of pulse type flow meters or keep track of power consumption by interfacing with a power meter. The Accumulator modules combine a frequency or pulse input circuit with an event counter. These modules allow a host computer to read both rate and total count of events. As shown in figure B-5 the input signal is passed through a comparator and the output of the comparator is sent to the microprocesor and to an event counter. Use the Read Data (RD) command to read the instantaneous value or rate of the frequency or pulse input. Use the Read Events (RE) command to read the total of events since the last time the event counter was cleared. Use the Events Clear (EC) command to read the total of events since the last time the event counter was cleared and clear the counter. The event counter will count up to 10 million transitions.

Artisan Technology Group - Quality Instrumentation ... Guaranteed | (888) 88-SOURCE | www.artisantg.com

Event Counter

The Event Counter input is connected to the Digital Input 0 terminal. It can be used to count any low speed event that occurs on the DIØ/EV input. Any of the interfacing techniques described for Digital Inputs may be used. The input pulses must meet the specifications in Figure 6.4 to avoid missing counts. Switch inputs are filtered to eliminate contact bounce.

The Event Counter is read by using the Read Events (RE) command. The maximum accumulated count is 9,999,999. If the maximum count is reached, counting stops. The Event Counter may be cleared to zero with the Clear Events (CE)or Events Read & Clear (EC) command. The Events Read & Clear (EC) command reads the number of events since the counter was last cleared and automatically clears the count to zero..The EC command eliminates a problem that may occur with a Read Events (RE) and Clear Events (CE) command sequence. Any counts that may occur between the RE-CE sequence will be lost. The EC command guarantees that the counter is read and cleared without missing any counts.

The Event Counter is not nonvolatile and the count will be lost if power to the module goes down. Upon power up, the counter is cleared to zero. The Remote Reset (RR) command or a line break will not affect the counter.

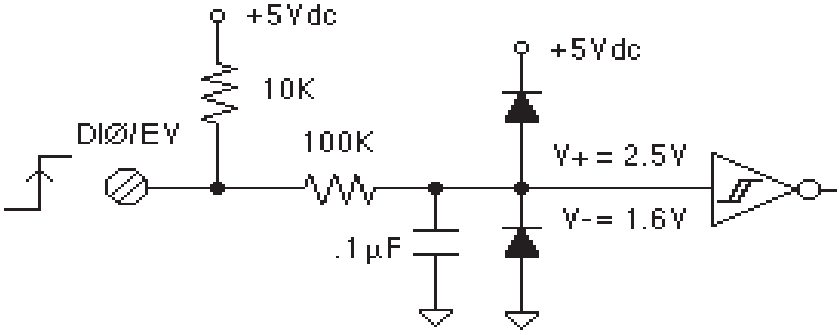

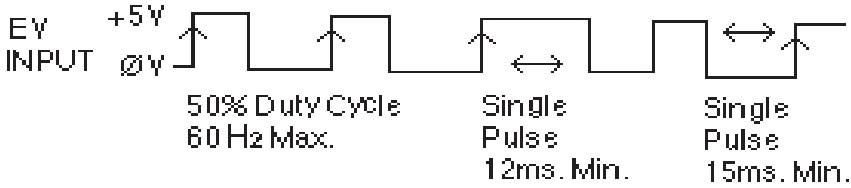

Figure B-6 Events Counter Cicuit.

Artisan Technology Group - Quality Instrumentation ... Guaranteed | (888) 88-SOURCE | www.artisantg.com

Appendix C
D1400 Data Sheet

SPECIFICATIONS: (Typical @ 25°C, V+ = +15V)

RTD Types: =.00385, .00388, .00392 100Ω @ 0°C
Resolution: 0.1°
Accuracy: ±0.3°C
Input connections: 2, 3, or 4 wire
Excitation current: .25 mA
Max. Lead resistance: 50Ω
Input protection to 120Vac
Automatic linearization and lead compensation
User selectable °C or °F
Lead resistance effect: 3 wire—2.5°C per Ω of imbalance
4 wire—Negligible
1 Digital Output

Sensor Hookups

The RTD sensor must be connected as shown in the accompanying diagrams to insure proper operation.

3-Wire: The D1400 modules are shipped from the factory configured for 3-wire operation. Connect the RTD sensor as shown in the diagram. The wires connected to the +I and -I terminals should be matched in length and gauged for proper lead compensation. The +I and +SENSE terminals must be tied together at the connector with a short wire jumper. For proper 3-wire lead compensation, the RTD 3/4 wire set-up bit must be 0 (see Set-Up (SU) command). A typical set-up for 3-wire operation would be 31070182.

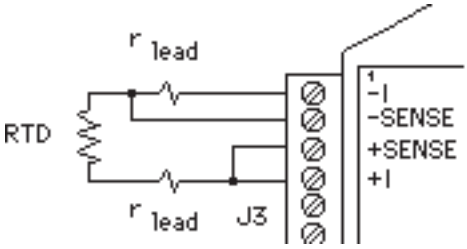

J1,J2 = Wire Jumper

J3 = Wire Jumper

Figure C-1. 3-wire RTD Configuration

Artisan Technology Group - Quality Instrumentation ... Guaranteed | (888) 88-SOURCE | www.artisantg.com

4-Wire: For 4-wire operation, connect the RTD as shown in the diagram. If the RTD has heavy excitation wires, they should be connected to the +I and -I terminals. For proper 4-wire operation, the RTD set-up bit must be set to 1 (see Set-Up (SU) command). A typical set-up for 4-wire operation would be 31071182.

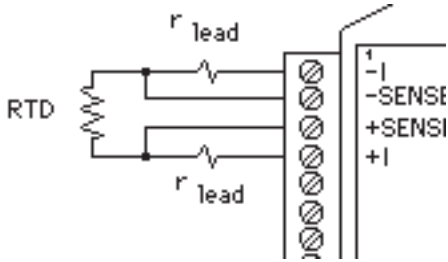

Figure C-2. 4-Wire RTD Configuration.

2-Wire: The 2-wire connection requires two jumpers on the connector (J1 & J2) as shown in the diagram. This connection provides no lead compensation. The RTD set-up bit can be either 0 or 1 for this connection.

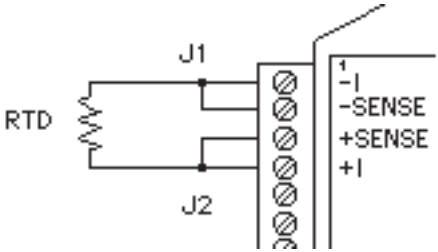

Figure C-3. 2-Wire RTD Configuration.

Start-Up: During normal operation, the RTD lead resistance is periodically scanned and filtered by the D1400 module. This may result in large initial errors if the RTD sensor is connected while the D1400 is powered up. To avoid this error, the sensor should be wired to the connector before power is applied. The error may also be eliminated by performing a Remote Reset (RR) command.

Lead Resistance Overload: If the lead resistance exceeds 50Ω, the output data is set to +99999.99.

Sensor Grounding: The sensor input is electrically isolated from the power and communications inputs for common-mode voltages up to 500V. If the sensor is to be grounded or shielded, the ground connection should be made to the -I terminal.

Artisan Technology Group - Quality Instrumentation ... Guaranteed | (888) 88-SOURCE | www.artisantg.com

Appendix D
D1500 Data Sheet

The D1500 Bridge Sensor Interface Modules contain all of the signal conditioning functions necessary to interface Strain Gage and other resistive bridge devices to an RS-232C or RS-485 computer port. Each module contains excitation, an instrumentation amplifier, and a smart analog to digital converter to convert resistive bridge sensor signals to ASCII data.

The user should become familiar with the generic D1000 information described in the D1000 User's Manual before attempting any of the procedures outlined below.

Data Format

The ASCII output data is expressed in millivolts with 10 microvolt resolution. For Example:

Command: **$1RD** **(Read Data)**
Response: ***+00012.34**

In this case, the output data is 12.34 millivolts.

Modules that are configured for ±30mV and have a usable span of ±60mV. Modules configured for ±100mV have a usable span of ±120mV. The extra overhead is used to trim any bridge offsets. Modules configured for 1-6V have a usable span of 0-6V with a resolution of 1mV.

Setup Data

The factory setup for all versions of D1500 modules is 310701C2

Sensor Connections

See Figure 1 for the proper bridge sensor connections. Shields or grounds should be connected to the -Excitation terminal.

Offset Trim

The D1500 modules do not provide any means of trimming the analog offset of the sensor bridge. However, sensor offsets may be nulled from the output data with the Trim Zero (TZ) command. This method of trimming is convenient because the offset may be trimmed through the communications port at any time. There is no need to have access to the module since the trimming is performed remotely.

The input signal conditioning circuitry of the D1500 modules have a wide input range to accommodate large sensor offsets without the need for external trims. Modules rated for ±30mV. have an input range capability of ±60mV. Modules rated for ±100mV have an input range of ±120mV.

Artisan Technology Group - Quality Instrumentation ... Guaranteed | (888) 88-SOURCE | www.artisantg.com

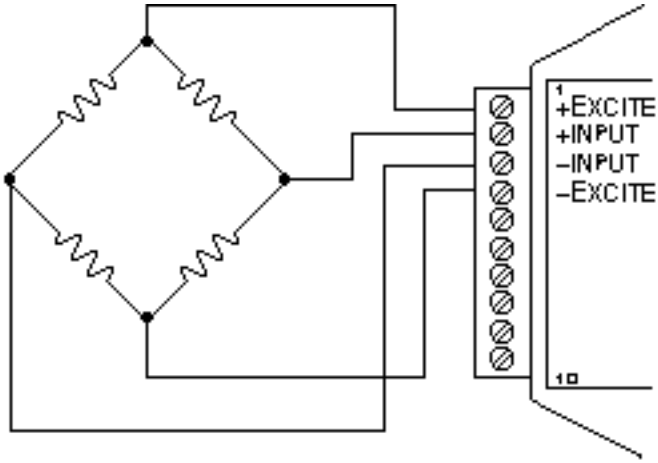

Figure D-1 Bridge Circuit Wiring

To perform an initial offset trim, attach the bridge unit to the module (as shown in Figure 1). Clear out any previous offset trims with the Clear Zero (CZ) command. Apply the desired zero condition to the bridge sensor. For a Strain Gage Bridge this would be the relaxed or unstrained condition. For load cells, the zero condition could include any tare weight due to a weighing platform or other attachments that would affect the zero balance. Obtain an initial reading using the Read Data (RD) command. The output data will indicate the total offset of the system. Subtract the offset value from the usable input range of your module, either ±60mV or ±120mV. The result is the maximum usable "input overhead". If the overhead is not sufficient for your application, the bridge must be trimmed externally to lower the offset to an acceptable value. The bridge may be trimmed with a small series resistance or a large shunt resistance to the appropriate leg of the bridge (as shown is Figure 2). If the initial offset is acceptable, the offset may be trimmed with the Trim Zero (TZ) command.

Artisan Technology Group - Quality Instrumentation ... Guaranteed | (888) 88-SOURCE | www.artisantg.com

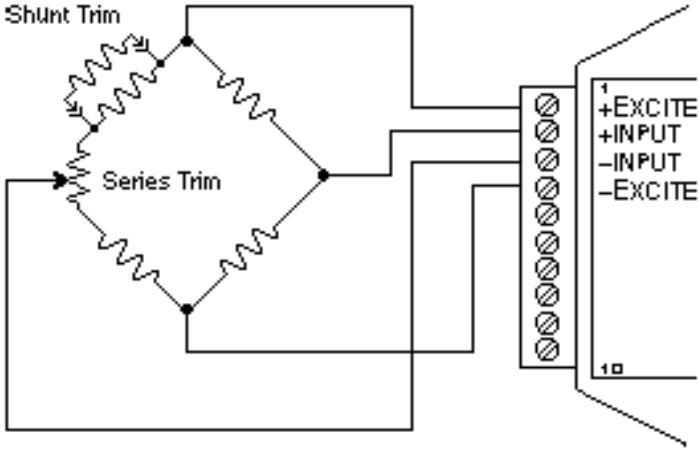

Figure D-2 Bridge Circuit Trim

Example 1:
A load cell to be used in a weighing application is mated to a D1521 module. The load cell is rated for 3mV/V, which results in a maximum ±30mV with 10V excitation. However, in this application, the load cell is used only in tension so its ideal output will be from 0 to +30mV.

The load cell is mounted in position with the weighing attachments. Clear any offset data that may be stored in the D1521 module:

Command:	**$1WE**	**(CZ is write-protected)**
Response:	*****	
Command:	**$1CZ**	**(Clear Zero)**
Response:	*****	

Verify that the Zero Trim is cleared:

Command:	**$1RZ**	**(Read Zero)**
Response:	***+00000.00**	

Obtain an initial offset reading from the load cell with no weight attached:

Command:	**$1RD**	**(Read Data)**
Response:	***+00002.34**	

Artisan Technology Group - Quality Instrumentation ... Guaranteed | (888) 88-SOURCE | www.artisantg.com

The initial offset is +2.34mV. The D1521 has a useful input range of ±60mV. After subtracting the offset the "input overhead" is -62.34mV and +57.66mV. The expected 0 to +30mV output of the load cell easily falls within the overhead range and no external trimming is necessary.

To Trim Zero:

Command: $1WE (TZ is write protected)
Response: *

Command: $1TZ+00000.00 (zero output)
Response: *

Now read the data output to verify the trim:

Command: $1RD (Read Data)
Response: *+00000.00

The load cell system has been trimmed to zero.

Example 2:
A strain gage bridge will be used to measure both compression and tensile strains on a structural member. The bridge is attached to a D1521 module and the ideal output from the bridge is ±30mV full scale.

Clear the Zero Trim:

Command: $1WE
Response: *

Command: $1CZ (Clear Zero)
Response: *

Measure the initial offset from the bridge:

Command: $1RD
Response: *-00043.21

In this case, the bridge exhibits a large initial offset of -43.21mV. Subtract this value from the ±60mV useful range of the D1521 to obtain and "input overhead" value of -16.79mV to 103.21mV. In this case the -16.79mV overhead is not large enough to cover the -30mV that may be obtained from the bridge. The bridge must be trimmed externally to bring the offset to within ±30mV. It is not necessary to obtain an exact zero with the external trim.

After the external trim has been performed, check the offset:

Command: $1RD
Response: *-00022.22

Artisan Technology Group - Quality Instrumentation ... Guaranteed | (888) 88-SOURCE | www.artisantg.com

This value is within the ±30mV offset necessary to provide enough head-room for the strain gage bridge.

Trim out the remaining offset with the Trim Zero (TZ) command:

Command: **$1WE**
Response: *****

Command: **$1TZ+00000.00**
Response: *****

The bridge is now trimmed to zero. Verify:

Command: **$1RD**
Response: *** +00000.00**

The Trim Zero (TZ) command may be used at any time to balance out offsets due to temperature, residual stress, tare, etc.

Excitation

D1500 modules may be ordered with either 5V or 10V excitation. Maximum excitation current available is 60mA. Modules with 10V excitation may be used with bridges that have input impedances of 166 ohms or greater. Half-bridges of 120 Ω strain gages may be used with 10V excitation if the bridge is completed with 350 Ω resistors. Modules with 5V excitation will source bridges of 85 Ω and up.

The actual excitation voltage may vary ±0.5V from the nominal values of +10V and +5V. However, the module's internal microprocessor constantly monitors the actual excitation voltage and provides compensation for any deviation from the nominal value. This results in a constant data output for a constant bridge load even if the excitation changes. From a user's point of view, the excitation voltage will appear to be exactly +10V or +5V.

Calibration

Since the D1500 modules use a ratiometric technique to compensate for variances in the excitation voltage, special consideration is required to properly calibrate the unit. Figure 3 shows the calibration setup. The Digital Voltmeter (DVM) must be capable of measuring the excitation voltage to 4 digit accuracy. The voltage source must be able to provide millivolt signals accurate to ±5 microvolts. The resistive divider may be constructed from 1% resistors of equal value from 100 to 1000 Ω. The resistor divider places the voltage source in the center of the common-mode range of the input amplifier for best accuracy.

Artisan Scientific - Quality Instrumentation Guarantee - Call (888) 88-SOURCE | www.artisanscientific.com

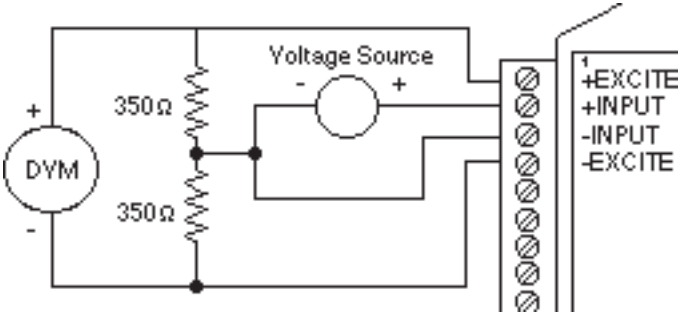

Figure D-3 D1500 Calibration

Step 1: power up the unit under test and let it warm up for at least two minutes.

Step 2: set the voltage source to 0 volts (short). Perform a TZ+00000.00 (Trim Zero) command to eliminate any common-mode offset errors.

Step 3: measure the excitation voltage with the DVM. Divide the result by the nominal excitation voltage, either 10V or 5V, to obtain a "compensation factor" = CF.

Step 4: calculate the correct calibration voltage to apply to the unit.

For ±30mV units the voltage is V = +50mV X CF

For ±100mV units the voltage is V = +100mV X CF

Set the voltage source to the calculated voltage V.

Step 5: trim the unit with the Trim Span (TS) command.

For ±30mV modules the command is $1TS+00050.00

For ±100mV modules the command is $1TS+00100.00

Step 6: verify the trim using the $1RD command. The result should be either *+00050.00 or *+00100.00

Artisan Technology Group - Quality Instrumentation ... Guaranteed | (888) 88-SOURCE | www.artisantg.com

Calibration Example:

We wish to calibrate a D1511 module. This unit contains 5V excitation and a ±30mV input.

Step 1 is straightforward and needs no further explanation.

Step 2: set the voltage source to 0 volts. Trim zero:

Command: **$1WE**
Response: *****

Command: **$1TZ+00000.00**
Response: *****

Step 3: measure the excitation voltage with the DVM. In this example the measured voltage is 4.954V Calculate the "compensation factor":

CF=4.954/5=0.9908

Step 4: calculate the calibration voltage:

V=+50mV X 0.9908=+49.54mV.

Set the voltage standard to +49.54mV.

Step 5: perform the Trim Span command:

Command: **$1WE**
Response: *****

Command: **$1TS+00050.00**
Response: *****

Step 6: verify the calibration, continuing to apply +49.54mV to the input:

Command: **$1RD**
Response: ***+00050.00**

The span trim is now complete. The Trim Zero (TZ) command may be used to trim sensor offsets without affecting the span trim.

Options

All D1500 units come standard with a Digital Output/Low Alarm output. This connector pin may be factory configured for a Digital Input/Event Counter input. Consult factory.

Continuous Output

Any of the D1000 sensor input modules may be factory configured to provide continuous output data without interrogation from the host. This option is ideal for use with LED display panels to provide a continuous visual output.

Artisan Technology Group - Quality Instrumentation ... Guaranteed | (888) 88-SOURCE | www.artisantg.com

To specify continuous output, add a "C" suffix to the model number; D1511C for example.

Programmable Scaling

The D2500 series of interface modules are bridge units similar to the D1500 series except that the input/output transfer function may be programmed by the user. Output data may be scaled to any desired engineering units such as pounds, psi, Newtons, etc. Nonlinear functions may also be programmed into the module. All scaling data is stored in nonvolatile memory and may be reprogrammed any number of times. Call factory for details.

Bridge Completion Resistors

For convenience, standard bridge completion resistors may be obtained from the factory. Standard values available are 120 Ω and 350 Ω.

Artisan Technology Group - Quality Instrumentation ... Guaranteed | (888) 88-SOURCE | www.artisantg.com

Appendix E
D2000 Series

The D2000 series is an enhancement of the D1000 series. As shipped from the factory, the D2000 modules operate in the same manner as their D1000 counterparts. For example, a D2111 shipped from the factory contains the same transfer function as a D1111 module; in this case they are both ±100 mV inputs and communicate with RS-232C.

Before any attempt is made to program a D2000, you must first be familiar with the operation of a D1000 module as described in this manual. That is why you received both the D1000 manual and the D2000 programming manual with your purchase of the D2000. Please refer to Chapter 1 "Getting Started" of this manual.

The D2000 series hardware is similar to the D1000 series in every respect except that the D2000 contains built-in commands to create custom input-to-output transfer functions. All programming is performed through the communications port of the D2000 module. There is never any need to open the module case. Modules may be re-ranged remotely as many times as desired. Function data is stored in nonvolatile memory to retain the scaling even if power is removed.

Artisan Technology Group - Quality Instrumentation ... Guaranteed | (888) 88-SOURCE | www.artisantg.com

Appendix F
D1000/2000 Continuous Operation

All D1000/2000 computer interface modules may be factory-configured to provide continuous output of analog input data. A D1000/2000 continuous module is intended for applications where no host computer is present. The limitation to the continuous mode is that only one module can be on the communications line.

Continuous output may be ordered by adding a “C” suffix to the model number. For example, a D1111 with the continuous output option may be ordered by specifying model number D1111C.

Interfaces with the “C” option have one connector pin labeled CONT*. This input pin is used to activate the continuous mode. The “*” in CONT* label indicates that the signal is active low. The CONT* signal is pulled up internally in the module and is voltage protected up to ±30Vdc.

If the CONT* line is left open or pulled high (>3.5Vdc), the module will operate normally as described in the manual. The only change is that the CONT* input occupies a pin normally used for a digital input or output.

If the CONT* input is pulled low or shorted to GND, the module will continuously output the analog input data. The data output is transmitted in the “short form” response format. For example, a typical output would look like *+00100.00. Each data message starts with an asterisk (*) and is terminated with a carriage return. Communication delays and line feeds may be added if necessary using the Set Up Command (see manual).

When the CONT* input is held low, the module will not respond to any input commands. Usually this is not a problem since in most cases a continuous-output module is used in a dedicated output-only application. If it is necessary to send commands to the module, some means of switching the CONT* line must be employed. This may be in the form of a simple toggle switch between the CONT* line and GND. The switch may be located local to the module or a dedicated wire may be run from the module to the host.

If a module with RS-232 communications is used with a host computer, the continuous mode may be controlled by running a wire from the CONT* pin to an RS-232 control signal, such as Request To Send (RTS). The RTS signal may be turned on and off by the computer to select continuous or normal mode. The CONT* input will handle the RS-232 voltage levels since it is protected to ±30Vdc.

Artisan Technology Group - Quality Instrumentation ... Guaranteed | (888) 88-SOURCE | www.artisantg.com

For dedicated output-only applications the RECEIVE input of RS-232 modules serves no purpose and may be disconnected to eliminate one wire connection to the host. In this case, be sure to connect the RECEIVE input to GND to prevent a line break condition.

In continuous mode, a module will output data after every A/D conversion, or approximately eight times a second. For baud rates of 300 and 600, the repetition rate is limited by the time required for communications.

When using higher baud rates, you may notice a slight pause in the data output after every 15 conversions. This pause is created when the module performs an internal auto-calibration cycle and is part of normal operation.

Setup with computer

The first issue before configuring the modules is to determine the application baud rate. This is the data rate for communicating information from the analog input module to the analog output module. This value is normally governed by the modems being used or the length of cable in hard-wired systems. Some modems communicate at many baud rates while others are limited to one or two baud rate values. Hard-wired systems that run over long distance should consider baud rates of 9600 baud or less. Remember, only eight new readings will be transmitted from the analog input module in one second and those readings will be transmitted about once every 125 milliseconds. Therefore, the highest baud rates are not really necessary.

Once baud rate is determined, the modules can be properly configured. In most cases, the majority of other pre-installed factory settings in both the analog input and output module will work “as is”. The Baud Rate is the only parameter that must be changed in the analog input module. The Baud Rate and “Continuous Enabled” bit must be changed in the analog output module.

Step1. The S1000 utility software is the best way to alter the setup message in each module. This program will run on any personal computer that is DOS compatible. The configuration process for both modules should take about 10 minutes after all wiring connections have been made.

Connect the analog input module to a computer serial port (either COM1: or COM2:) using the “Figure 1.1 RS-232C Quick Hook-Up” drawing in Chapter 1 of this users manual. Note that a power supply is also required. Once the connections are made turn the power supply on and

Artisan Technology Group - Quality Instrumentation ... Guaranteed | (888) 88-SOURCE | www.artisantg.com

execute the S1000 utility software (filename = 100030.exe). At the main menu, select HOST and specify the correct serial computer port. All remaining host values should not have to be changed. Press <ESC> key and return to main menu when port selection is complete.

Step 2. Select main menu “SETUP” and enter a module address and model number. If the module “DEFAULT*” pin is grounded (connected to GND terminal) then enter address “1” and press <ENTER>. Enter the correct model number located on the module label and press <ENTER>. The module setup information will then be read and displayed for editing.

The Baud Rate value is the only value that must change in most cases. With the mouse pointer, double-click on the Baud Rate box and increment to the desired value. Press the “+” key to increment the value if a mouse is not available. After the value has been changed, depress the <F10> function key to download the new setup value. Press “N” not to reset the remote device. The analog input module is now configured.

Press the <ESC> key and return to the main menu. Turn the module power supply off and remove the black screw terminal plug from the side of the analog input module.

Step 3. Plug the screw terminal plug, that is connected to the computer, into the side of the analog output module and turn the power supply on. Select main menu “SETUP” and re-enter the address and new model number. If the “DEFAULT*” pin is grounded, enter address “1” and press <ENTER>. Enter the analog output module model number and press <ENTER>.

The Baud Rate value and “Continuous Enabled” bit are the only values that must change in most cases. With the mouse pointer, double-click on the Baud Rate box and increment to the desired value. Double-click on the “Continuous Input” selection box to “enable” that option. Press the “+” key to increment either value if a mouse is not available. After the values have been changed, depress the <F10> function key to download the new values. Press “N” not to reset the remote device.

The analog output module is now configured. Press the <ESC> key and return to the main menu. Turn the module power supply off and remove the black screw terminal plug from the side of the analog output module. Both modules are now properly configured.

Artisan Technology Group - Quality Instrumentation ... Guaranteed | (888) 88-SOURCE | www.artisantg.com

Install/Test the configuration

The module setup modifications are complete. Both modules may now be bench tested or installed into the final application. The module power supply and communications connections should be straight forward during installation.

Make sure that the “DEFAULT*” pin on each module IS NOT connected to ground. For proper “continuous” operation, another pin on each module MUST BE connected to ground. The “CONT*” pin on the analog input module and the “DI2” pin on the analog output module must both be connected to ground (GND pin).

Turn the power supplies on for both modules, apply an test or real signal input into the analog input module and some corresponding signal level should be output from the output module.

Artisan Scientific - Quality Instrumentation Guaranteed | (888) 88-SOURCE | www.artisan-sci.com

Appendix G
RTS Operation

The D1000R/2000R series analog input modules interface to radio and leased telephone line modems. Many of these modems require an RS-232 signal to activate, or “key-up”, the transmitter. They also require adequate delay time for the transmitter to turn on before transmitting data. The amount of delay time required varies between modem types and manufacturers. Typical time periods range from 150ms for leased line modems to 500ms for radio modems.

D1000/2000 modules have a quick response turnaround time. After a module receives a valid command, it takes typically 10ms (RD command) for a module to begin transmitting data. This response time is much too fast for the transmitter delays associated with radio frequency and leased-line modems. The R series is designed to solve this problem.

The D1000R/2000R series modules each contain a Request-To-Send (RTS) output to synchronize RS-232 data to radio frequency or leased-line modems. The RTS signal is used as a hand-shaking signal to activate and deactivate a modem transmitter. Once the transmitter turns on, it is safe to transmit the data. The RTS signal normally remains on until immediately after the last data character is transmitted.

The D1000R/2000R series modules are designed for applications that contain one analog process point per modem. For applications containing multiple analog points per modem the A2400 Radio Modem Interface is recommended. The A2400 converts RS-232 modem data to RS-485 and provides RS-232 handshaking signals to the modem. The A2400 is used with standard D1000R/2000R series RS-485 modules.

The D1000R/2000R series is similar to the standard D1000/2000 series. This manual is an appendix to the D1000 series manual. Users of the D1000R/2000R RTS modules should read the D1000 series manual. The commands listed below are additional commands found only in the D1000R/2000R series.

THEORY OF OPERATION

The D1000R/2000R series analog input modules each contain an RS-232 Request-To-Send (RTS) output signal. The RTS signal may be activated using simple ASCII commands. The RTS output signal works together with three user programmable time delays that control the operation of the RTS signal. Each delay has a user-programmable range of 0 to 2000ms and may be set to 1ms resolution. The delay values are stored in EEPROM and must

Artisan Technology Group - Quality Instrumentation ... Guaranteed | (888) 88-SOURCE | www.artisantg.com

be specified using the standard data format '+#####.##'. Use the write protected commands T1, T2 and T3 to specify the delay time values.

The RTS output function is activated using the RTS+ or RTS- commands. The + and - polarity characters determine the active polarity of the RTS signal while data is being transmitted. The signal polarity can be either active high (typically +Vs) or low (zero volts). Use the RTS+ command to specify an active high output or the RTS- command to specify an active low output. Once the RTS+ or RTS- command is received, the module will store the polarity information in internal EEPROM and the RTS output function will be enabled. The RTS output function will remain enabled until an RTSD command is received by the module.

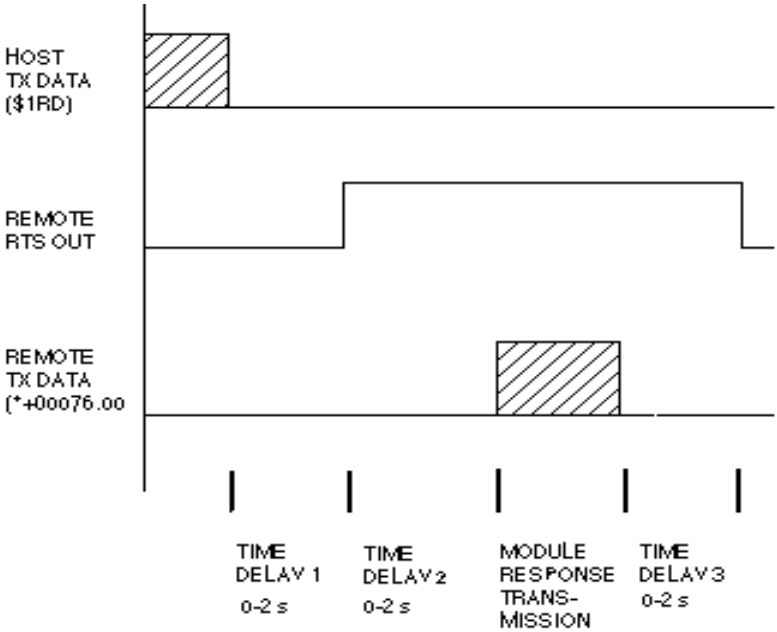

Figure G-1. Timing Diagram.

In addition to the RTS signal three user programmable time delays are provided in the RTS series. As shown in Figure G-1, when the RTS module receives a command it begins the first delay time, T1. After T1 is completed, the module activates the RTS signal to key the radio transmitter. After the RTS signal is activated, delay time T2 started to allow the transmitter adequate time to turn-on. After T2 is completed the module outputs the buffered response data to the RS-232 Transmit line. When the data transmission is complete, the module starts delay time T3. After time T3, the module's RTS signal turns off and is now ready for the next command.

Artisan Technology Group - Quality Instrumentation ... Guaranteed | (888) 88-SOURCE | www.artisantg.com

The RTS output and the delay time values are disabled while in Default Mode.

The RTS output is located on digital output bit 0 (DO0/RTS). The digital output is an open-collector transistor and will require an external pull-up resistor. The external pull-up may be eliminated if a module contains one unused digital input bit. All D1000R/2000R series digital input bits contain an internal 10K ohm pull-up resistor to +5Vdc. Simply connect the DO0/RTS terminal to the unused digital input.

RTS COMMAND SET

Command and Definition		Typical Command Message	Typical Response Message ($ prompt)
RID	Read Identification	$1RID	*BOILER
RT1	Read Time Delay #1	$1RT1	*+00300.00
RT2	Read Time Delay #2	$1RT2	*+00155.00
RT3	Read Time Delay #3	$1RT3	*+00035.00
WE	Write Enable	$1WE	*
Write Protected Commands			
ID	Identification	$1ID BOILER	*
RTS+	RTS Active HIGH	$1RTS+	*
RTS-	RTS Active LOW	$1RTS-	*
RTSD	RTS Disable	$1RTSD	*
T1	Set Time Delay #1	$1T1+00300.00	*
T2	Set Time Delay #2	$1T2+00250.00	*
T3	Set Time Delay #3	$1T3+00035.00	*

IDentification (ID)

The IDentification command allows the user to write a message into the internal nonvolatile memory which may be read back at any time using the Read IDentification (RID) command. The message may be up to 16 characters long and has no affect on the module operation. Useful information such as the module location, calibration date or model number may be stored for later retrieval.

Artisan Technology Group - Quality Instrumentation ... Guaranteed | (888) 88-SOURCE | www.artisantg.com

The ID command is write protected and checksums are not supported. The module will abandon any ID command with a message length in excess of 16 characters.

Command: **$1IDBOILER ROOM**
Response: *****

Command: **#1IDBOILER ROOM**
Response: ***1IDBOILER ROOM02**

Read IDentification (RID)

The Read Identification (RID) command is used to read data previously stored by the ID command. The RID command response message length is variable depending on the stored message length. The maximum response length can be up to 25 characters using the long form prompt and linefeeds enabled.

Command: **$1RID**
Response: ***BOILER ROOM**

Command: **#1RID**
Response: ***1RIDBOILER ROOM54**

Read Time Delay 1 (RT1)

The RT1 command is used to read the time delay value previously stored with the T1 command. The value returned is scaled in milliseconds and has a range of 0 to 2000ms.

Command: **$1RT1**
Response: ***+00100.00**

Command: **#1RT1**
Response: ***1RT1+00100.00DC**

Read Time Delay 2 (RT2)

The RT2 command is used to read the time delay value previously stored with the T2 command. The value returned is scaled in milliseconds and has a range of 0 to 2000ms.

Command: **$1RT2**
Response: ***+00550.00**

Artisan Technology Group - Quality Instrumentation ... Guaranteed | (888) 88-SOURCE | www.artisantg.com

Command: **#1RT2**
Response: ***1RT2+00550.00E6**

Read Time Delay 3 (RT3)
The RT3 command is used to read the time delay value previously stored with the T3 command. The value returned is scaled in milliseconds and has a range of 0 to 2000ms.

Command: **$1RT3**
Response: ***+00035.00**

Command: **#1RT3**
Response: ***RT3+00035.00E5**

Request-To-Send+ (RTS+)
The RTS+ command enables the RTS output function and sets the active signal polarity to high (positive voltage). The RTS+ command should be selected for modems that require a positive signal level to enable the transmitter. During the idle state, while no data is being transmitted, the RTS output terminal will be low (zero volts).

The RTS+ command is write protected and the polarity value is stored in EEPROM memory. Therefore, all subsequent power ups will activate the RTS+ mode eliminating the need for software initialization. The RTS+ mode will remain active until the module receives a RTSD command.

NOTE: The RTS output function will override any alarm or digital output commands associated with digital output 0.

Command: **$1RTS+**
Response: ***

Command: **#1RTS+**
Response: ***1RTS+7F**

Request-To-Send- (RTS-)
The RTS- command enables the RTS output function and sets the active signal polarity to low (zero volts). The RTS- command should be selected for modems that require a low signal level to enable the transmitter. During the idle state, while no data is being transmitted, the RTS output terminal will be high (positive voltage).

Artisan Technology Group - Quality Instrumentation ... Guaranteed | (888) 88-SOURCE | www.artisantg.com

The RTS- command is write protected and the polarity value is stored in EEPROM memory. Therefore, all subsequent power ups will activate the RTS- mode eliminating the need for software initialization. The RTS- mode will remain active until the module receives a RTSD command.

NOTE: The RTS output function will override any alarm or digital output commands associated with digital output 0.

Command: **$1RTS-**
Response: *****

Command: **#1RTS-**
Response: ***1RTS-81**

Request-To-Send Disable (RTSD)

The RTSD command disables the RTS+ or RTS- function. This command returns digital output DO0/RTS to a normal digital or alarm output. This output will now respond to Digital Output (DO) commands or as alarms.

The RTSD command is write protected and stored in EEPROM. Therefore, the RTS function will remain disabled until another RTS+ or RTS- command is received.

Command: **$1RTSD**
Response: *****

Command: **#1RTSD**
Response: ***1RTSD98**

Set Time Delay 1 (T1)

Time delay T1 is used to guarantee a certain amount of dead time between the completion of a host transmitted command and the beginning of a remote module response transmission. This delay starts immediately after a carriage return character ($0D) is received by the RTS module.

Time delay T1 has a user programmable time range from 0 to 2000 milliseconds. Once T1 expires the RTS signal will be asserted active and delay time T2 will begin. The examples below would specify a time delay value of 100ms.

Command: **$1T1+00100.00**
Response: *****

Artisan Technology Group - Quality Instrumentation ... Guaranteed | (888) 88-SOURCE | www.artisantg.com

Command: **#1T1+00100.00**
Response: ***1T1+00100.008A**

Set Time Delay 2 (T2)
Time delay T2 is used to ensure adequate time is allowed for the modem transmitter to turn on before any data is transmitted. Delay T2 starts immediately after the RTS signal is enabled. Once T2 expires, RS-232 data will be transmitted thru the modem to the host computer. The amount of delay time required is hardware specific and can usually be found in the modem users manual.

Time delay T2 has a user programmable time range from 0 to 2000 milliseconds. The examples below would specify a time delay value of 450ms.

Command: **$1T2+00450.00**
Response: ***

Command: **#1T2+00450.00**
Response: ***1T2+00450.0093**

Set Time Delay 3 (T3)
Time delay T3 is required to hold the RTS signal active for a short period of time after the response data transmission is complete. Delay T3 begins immediately after the module has transmitted the last response message character. Once T3 expires the RTS signal will return to the disabled (off) state.

Time delay T3 has a user programmable time range from 0 to 2000 milliseconds. The examples below would specify a time delay value of 35ms.

Command: **$1T3+00035.00**
Response: ***

Command: **#1T3+00035.00**
Response: ***1T3+00035.0093**

Write Enable (WE)
The EEPROM in each RTS module is write protected against accidental changes of setup or time delay data. To change these write protected values, the WE command must precede each write protected command.

Artisan Technology Group - Quality Instrumentation ... Guaranteed | (888) 88-SOURCE | www.artisantg.com

The response to a WE command is an asterisk indicating that the module is ready to accept a write protected command. Once the write protected command is successfully completed, the module will automatically become write disabled. Each write protected command must be individually preceded by a WE command.

If a module is write enabled and the execution of a command results in an error message other than WRITE PROTECTED, the module will remain write enabled until a command is successfully completed resulting in a '*' response.

Command: **$1WE**
Response: *****

Command: **#1WE**
Response: ***1WEF7**

Artisan Technology Group - Quality Instrumentation ... Guaranteed | (888) 88-SOURCE | www.artisantg.com

Appendix H
D1000/2000 Specifications

Specifications (typical @ +25° C and nominal power supply unless otherwise noted.)

Analog
• Single channel analog input.
• Maximum CMV, input to output at 60Hz: 500V rms.
• Leakage current, input to output at 115Vrms, 60Hz: <2µA rms.
• 15 bit measurement resolution.
• 8 conversions per second.
• Autozero & autocalibration—no adjustment pots.

Digital
• 8-bit CMOS microcomputer.
• Digital scaling, linearization and calibration.
• Nonvolatile memory eliminates pots and switches.

Digital filtering
• Small and large signal with user selectable time constants from 0 to 16 seconds.

Events counter
• Up to 10 million positive transitions at 60Hz max., filtered for switch debounce.

Digital inputs
• Voltage levels: ±30V without damage.
• Switching levels: High, 3.5V min., Low, 1.0V max.
• Internal pull up resistors for direct switch input.

Digital outputs
• Open collector to 30V, 30mA max. load.

Alarm outputs
• HI/LO limit checking by comparing input values to down-loaded HI/LO limit values stored in memory.
• Alarms: latching (stays on if input returns to within limits) or momentary (turns off if input returns to within limits).

Communications
• Communications in ASCII via RS-232C, RS-485 ports.
• Selectable baud rates: 300, 600, 1200, 2400, 4800, 9600, 19200, 38400, 57600, 115200.
• NRZ asynchronous data format; 1 start bit, 7 data bits, 1 parity bit and 1 stop bit.

Artisan Technology Group - Quality Instrumentation ... Guaranteed | (888) 88-SOURCE | www.artisantg.com

- Parity: odd, even, none.
- User selectable channel address.
- ASCII format command/response protocol.
- Up to 122 multidrop modules per host serial port.
- Communications distance up to 4,000 feet (RS-485)**.**
- Transient suppression on RS-485 communications lines.
- Communications error checking via checksum.
- Can be used with "dumb terminal".
- Scan up to 250 channels per second.
- All communications setups stored in EEPROM.

Power

Requirements: Unregulated +10V to +30Vdc, 0.75W max (D1500/D2500, 2.0W max.).
Internal switching regulator.
Protected against power supply reversals.

Environmental

Temperature Range: Operating -25°C to +70°C.
Storage -25°C to +85°C.
Relative Humidity: 0 to 95% noncondensing.

Warranty

12 months on workmanship and material.

D1100/D2100 Voltage Inputs

- Voltage ranges: ±10mV, ±1V, ±5V, ±10V, ±100Vdc.
- Resolution: 0.01% of FS (4 digits).
- Accuracy: ±0.02% of FS max.
- Common mode rejection: 100dB at 50/60Hz.
- Zero drift: ±1 count max (autozero).
- Span tempco: ±50ppm/°C max.
- Input burnout protection to 250Vac .
- Input impedance: ≤ ±1V input = 100MΩ min.
  ≥ ±5V input = 1MΩ min.
- 1 Digital input/Event counter, 2 Digital outputs.

D1200/D2200 Current Inputs

- Current ranges: ±1mA, ±10mA, ±100mA, ±1A, 4-20mAdc.
- Resolution: 0.01% of FS (4 digits), 0.04% of FS (4-20mA).
- Accuracy: ±0.02% of FS, 0.04% of FS (4-20mA).
- Common mode rejection: 100dB at 50/60Hz.
- Zero drift: ±1 count max (autozero).
- Span tempco: ±50ppm/°C max. (±1A = ±80 ppm/°C max.)
- Voltage drop: ±0.1V max.
- 1 Digital input/Event counter, 2 Digital outputs.

Artisan Technology Group - Quality Instrumentation ... Guaranteed | (888) 88-SOURCE | www.artisantg.com

D1300 Thermocouple Inputs

- Thermocouple types: J, K, T, E, R, S, B, C (factory set).
- Ranges: J = -200°C to +760°C B = 0°C to +1820°C
  K = -150°C to +1250°C S = 0°C to +1750°C
  T = -200°C to +400°C R = 0°C to +1750°C
  E = -100°C to +1000°C C = 0°C to +2315°C
- Resolution: ±1°.
- Overall Accuracy (error from all sources) from 0 to +40°C ambient:
  ±1.0 °C max (J, K, T, E).
  ±2.5 °C max (R, S, B, C)(300°C TO FS).
- Common mode rejection: 100dB at 50/60Hz.
- Input impedance: 100MΩ min.
- Lead resistance effect: <20µV per 350Ω.
- Open thermocouple indication.
- Input burnout protection to 250Vac.
- User selectable °C or °F.
- Overrange indication.
- Automatic cold junction compensation and linearization.
- 2 Digital inputs, Event counter, 3 Digital outputs.

D1400RTDInputs

- RTD types: α = .00385, .00392, 100Ω at 0°C,
  .00388, 100Ω at 25°C.
- Ranges: .00385 = -200°C to +850°C.
  .00392 = -200°C to +600°C.
  .00388 = -100°C to +125°C.
- Resolution: 0.1°.
- Accuracy: ±0.3°C.
- Span tempco: ±50 ppm/°C max.
- Common mode rejection: 100dB at 50/60Hz.
- Input connections: 2, 3, or 4 wire.
- Excitation current: 0.25mA.
- Lead resistance effect: 3 wire - 2.5°C per Ω of imbalance.
  4 wire - negligible.
- Max lead resistance: 50Ω.
- Input burnout protection to 120Vac .
- Automatic linearization and lead compensation.
- User selectable °C or °F.
- 1 Digital output.

D1450 Thermistor Inputs

- Thermistor types: 2252Ω at 25°C, TD Series
- Ranges: 2252Ω = -0°C to +100°C.
  TD = -40°C to +150°C.
- Resolution: 2252Ω = 0.01°C or F.
  TD = 0.1°C or F

Artisan Technology Group - Quality Instrumentation ... Guaranteed | (888) 88-SOURCE | www.artisantg.com

- Accuracy: 2252Ω = ±0.1°C.
  TD = ±0.2°C
- Common mode rejection: 100dB at 50/60Hz.
- Input protection to 30Vdc .
- User selectable °C or °F.
- 1 Digital input/ Event counter, 2 Digital outputs.

D1500/D2500 Bridge Inputs

- Voltage Ranges: ±30mV, ±100mV, 1-6Vdc.
- Resolution: 10µV (mV spans).
  0.02% of FS (V span).
- Accuracy: ±0.05% of FS max.
- Common mode rejection: 100dB at 50/60Hz.
- Input burnout protection to 30Vdc .
- Offset Control: Full input range.
- Excitation Voltage: 5V, 8V, 10Vdc, 60mA max.
- Zero drift: ±1µV/°C max.
- Span tempco: ±50ppm/°C max.
- 1 Digital output.

D1600/D2600 Timer and Frequency Inputs

- Input impedance: 1M Ω.
- Switching level: selectable 0V, +2.5V.
- Hysteresis: Adjustable 10mV-1.0V.
- Input burnout protection: 250Vac.
- 1 Digital input/Event counter.

Frequency Input

- Range: 1Hz to 20KHz.
- Resolution: 0.005% of reading + 0.01Hz.
- Accuracy: ±0.01% of reading ±0.01Hz.
- Tempco: ±20ppm/ °C.

Timer Input

- Range: 100 µs to 30s.
- Resolution: 0.005% of reading + 10 µs.
- Accuracy: ±0.01% of reading ±10 µs.
- Tempco: ±20ppm/ °C.

Event Counter Input

- Input Bandwidth: 60Hz, (optional 20KHz max) .
- Up to 10 million positive transitions.

Accumulator Input

- Input Frequency Range: 1Hz to 10KHz.

Artisan Technology Group - Quality Instrumentation ... Guaranteed | (888) 88-SOURCE | www.artisantg.com

- Input Timer Range: 100 µs to 30s.
- Pulse Count: Up to 10 million positive transitions.
- Resolution: 0.005% of reading + 0.01Hz (Frequency).
  0.005% of reading + 10 µs (Timer).
- Accuracy: ±0.01% of frequency reading ±0.01Hz.
  ±0.01% of timer reading ±10µs.
- Tempco: ±20ppm/°C.

D1700 Digital Inputs/Outputs

D1711, D1712: 15 digital input/output bits.
- User can define any bit as an input or an output.
- Input voltage levels: 0-30V without damage.
- Input switching levels: High, 3.5V min., Low, 1.0V max.
- Outputs: Open collector to 30V, 100mA max. load.
- Vsat: 1.0V max @ 100mA.
- Single bit or parallel I/O addressing.

D1701, D1702: 7 digital inputs and 8 digital outputs.
- Input voltage levels: ±30V without damage.
- Input switching levels: High,3.5V min.,Low,1.0V max.
- Outputs: open collector to 30V, 30mA max. load.
- Vsat: 0.2V max @ 30mA.
- Internal pull up resistors for direct switch input.
- Inputs/Outputs are read/set in parallel.

Artisan Technology Group - Quality Instrumentation ... Guaranteed | (888) 88-SOURCE | www.artisantg.com

Artisan Scientific
QUALITY INSTRUMENTATION ... GUARANTEED

Looking for more information?

Visit us on the web at **http://www.artisan-scientific.com** for more information:

- Price Quotations
- Drivers
- Technical Specifications, Manuals and Documentation

Artisan Scientific is Your Source for Quality New and Certified-Used/Pre-owned Equipment

- Tens of Thousands of In-Stock Items
- Hundreds of Manufacturers Supported
- Fast Shipping and Delivery
- Leasing / Monthly Rentals
- Equipment Demos
- Consignment

Service Center Repairs

Experienced Engineers and Technicians on staff in our State-of-the-art Full-Service In-House Service Center Facility

InstraView™ Remote Inspection

Remotely inspect equipment before purchasing with our Innovative InstraView™ website at **http://www.instraview.com**

We buy used equipment! We also offer credit for Buy-Backs and Trade-Ins

Sell your excess, underutilized, and idle used equipment. Contact one of our Customer Service Representatives today!

Talk to a live person: 888-88-SOURCE (888-887-6872) | Contact us by email: sales@artisan-scientific.com | Visit our website: http://www.artisan-scientific.com

Artisan Technology Group - Quality Instrumentation ... Guaranteed | (888) 88-SOURCE | www.artisantg.com

Artisan Technology Group

Artisan Technology Group is your source for quality new and certified-used/pre-owned equipment

- FAST SHIPPING AND DELIVERY
- TENS OF THOUSANDS OF IN-STOCK ITEMS
- EQUIPMENT DEMOS
- HUNDREDS OF MANUFACTURERS SUPPORTED
- LEASING/MONTHLY RENTALS
- ITAR CERTIFIED SECURE ASSET SOLUTIONS

SERVICE CENTER REPAIRS
Experienced engineers and technicians on staff at our full-service, in-house repair center

InstraView℠ REMOTE INSPECTION
Remotely inspect equipment before purchasing with our interactive website at ***www.instraview.com*** ↗

WE BUY USED EQUIPMENT
Sell your excess, underutilized, and idle used equipment
We also offer credit for buy-backs and trade-ins
www.artisantg.com/WeBuyEquipment ↗

LOOKING FOR MORE INFORMATION?
Visit us on the web at ***www.artisantg.com*** ↗ for more information on price quotations, drivers, technical specifications, manuals, and documentation

Contact us: (888) 88-SOURCE | sales@artisantg.com | www.artisantg.com