Artisan Technology Group

Artisan Technology Group is your source for quality new and certified-used/pre-owned equipment

- FAST SHIPPING AND DELIVERY
- TENS OF THOUSANDS OF IN-STOCK ITEMS
- EQUIPMENT DEMOS
- HUNDREDS OF MANUFACTURERS SUPPORTED
- LEASING/MONTHLY RENTALS
- ITAR CERTIFIED SECURE ASSET SOLUTIONS

SERVICE CENTER REPAIRS
Experienced engineers and technicians on staff at our full-service, in-house repair center

InstraView℠ REMOTE INSPECTION
Remotely inspect equipment before purchasing with our interactive website at ***www.instraview.com*** ↗

WE BUY USED EQUIPMENT
Sell your excess, underutilized, and idle used equipment
We also offer credit for buy-backs and trade-ins
www.artisantg.com/WeBuyEquipment ↗

LOOKING FOR MORE INFORMATION?
Visit us on the web at ***www.artisantg.com*** ↗ for more information on price quotations, drivers, technical specifications, manuals, and documentation

Contact us: (888) 88-SOURCE | sales@artisantg.com | www.artisantg.com

D3000 and D4000 SERIES
COMPUTER TO ANALOG OUTPUT MODULES

D3000 and D4000 FEATURES

- Analog output ranges: 0-1V, ±1V, 0-5V, ±5V, 0-10V, ±10V, 0-20mA, 4-20mA.
- Communicates in ASCII with RS-232 or RS-485 serial ports.
- Programmable high/low output limits.
- 500Vrms output isolation.
- 12-bit output resolution.
- Scaling in engineering units.
- Baud rates: 300 to 38,400.
- Nonvolatile digital calibration.
- Output protection: 240VAC (current output).
  ±30V (voltage outputs).
- Direct connection to ‘dumb’ terminals or modems.
- Requires +10 to +30Vdc unregulated supply.
- May be located up to 4,000 feet from host (RS-485).
- Addressable: up to 124 units per serial port.
- ‘Bumpless’ manual control inputs.

D4000 PROGRAMMING FEATURES

Provides intelligent features not found in the D3000.

- Fully programmable output slopes: 0.01V/s (mA/s) to 10,000V/s (mA/s).
- Programmable data scaling to any desired units.
- True analog readback of output signal.
- Programmable starting value.
- Programmable watchdog timer provides orderly shutdown in the event of host failure.

APPLICATIONS

- Motion control
- Motor speed control
- Robotic welding control
- Interfaces to modems
- Programmable analog source for product test

D3000/4000 SPECIFICATIONS (typical @+25°C and nominal power supply unless otherwise noted.)

Analog Output
- Single channel analog output.
  Voltage: 0-1V, ±1V, 0-5V, ±5V, 0-10V, ±10V.
  Current: 0-20mA, 4-20mA.
- Output isolation: 500V rms.
- 12-bit output resolution.
- Accuracy: 0.1% FSR max (Integral & Differential Non-linearity.
- Zero drift: ±30µV/°C (Voltage Output).
  ±1.0µA/°C (Current Output).
- Span tempco: ±50ppm/°C max.
- 1000 conversions per second.
- Settling time to 0.1% FS: 300µs typ (1ms max).
- Output change manual mode (-FS to +FS): 5s.
- Programmable output slope (D4000): 0.01V/s (mA/s) to 10,000V/s (mA/s).
- Current output voltage compliance: ±12V.
- Voltage Output drive: 5mA max.

Analog Output Readback (D4000)
- 8-bit analog to digital converter.
- Accuracy over temperature (-25 to +70°C): 2.0% FS max.

Digital
- 8-bit CMOS microcomputer.
- Digital scaling and calibration stored in nonvolatile memory.
- Programmable High/Low output limits.
- Programmable data scaling (D4000).
- Programmable starting value (D4000).
- Programmable watchdog timer provides orderly shut-down in the event of host failure (D4000).

Digital Inputs
- Three digital inputs per module.
- Voltage levels: ±30V without damage.
- Switching levels: High, 3.5V min., Low, 1.0V max.
- Internal pull up resistors for direct switch input.

Communications
- Communications in ASCII via RS-232C, RS-485 ports.
- Selectable baud rates: 300, 600, 1200, 2400, 4800, 9600,19200, 38400.
- NRZ asynchronous data format; 1 start bit, 7 data bits, 1 parity bit and 1 stop bit.
- Parity: odd, even, none.
- User selectable channel address.
- ASCII format command/response protocol.
- Up to 124 multidrop modules/host serial port.
- Communications distance up to 4,000 feet (RS-485).
- Can be used with “dumb” terminal.
- All communications setups (address, baud rate, parity) stored in nonvolatile memory using EEPROM.
- Checksum can be added to any command or response.

Power
Requirements: Unregulated +10V to +30Vdc, 0.75W max. (voltage output), 1.0W max. (current output).
Internal switching regulator.
Protected against power supply reversals.

Environmental
Temperature Range: Operating -25°C to +70°C.
Storage -25°C to +85°C.
Relative Humidity: 0 to 95% noncondensing.

Specifications are subject to change without notice.

Mechanicals and Dimensions
Case: ABS with captive mounting hardware.
Connectors: Screw terminal barrier plug (supplied).
Repace with Phoenix MSTB 1.5/10 ST 5.08 or equivalent.

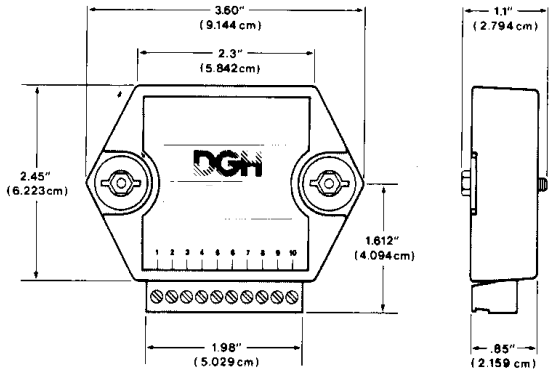

NOTE: Spacing for mounting screws = 2.700" (6.858 cm). Screw threads are 6 X 32.

GENERAL DESCRIPTION & BLOCK DIAGRAM

The DGH D3000/4000 series are complete computer-to-analog output interfaces. They are designed to be mounted remotely from a host computer and communicate, in ASCII, with standard RS-232 and RS-485 serial ports. Simple ASCII commands are used to control a 12-bit DAC (Digital-to-Analog Converter) which is scaled to provide commonly used current and voltage ranges. An 8-bit CMOS microprocessor provides an intelligent interface between the host and the DAC.

The DGH modules are easy to use. You do not need engineering experience in complicated data acquisition hardware. This modular approach to data acquisition is extremely flexible, easy to use and cost effective. The modules can be mixed and matched to fit the application. They can be placed remote from the host and from each other. You can string up to 124 modules on one set of wires.

Figure 1 shows a functional block diagram of the D3000/4000. The DAC converts digital data derived from host commands into the desired analog output. The microprocessor receives commands and data from the host computer through an RS-232 or RS-485 port. A wide variety of two-or-three-letter commands from the host control the DAC, read status information, and configure the module to fit your requirements. Responses to commands are produced by the microprocessor and transmitted back to the host over the serial link.

For example, the module's analog output is controlled by the Analog Output (AO) command from the host. The host command/module response sequence looks like this:

Command: $1AO+00010.00
Response: *

If a 0-20mA output module is used for this example, the AO command produces a 10mA output. The module performs the output function and responds with a '*' as an acknowledgement that the command has been performed.

In response to host commands, the microprocessor produces the appropriate digital data necessary to control the DAC. Digital data is transmitted to the DAC through opto-isolators that provide electrical isolation. The DAC produces a precise analog current that is directly proportional to the magnitude of the digital data. The DAC output current is processed and amplified by signal conditioning circuits to produce the desired output voltage or current. Output protection circuits protect the module from potentially damaging output faults.

An EEPROM (Electrically Erasable Programmable Read-Only Memory) retains important data such as the address, baud rate, parity and calibration data even if the module is powered down.

The D4000 series features an 8-bit ADC (Analog to Digital Converter) that monitors the output signal. The ADC input is tied to the analog output and converts the

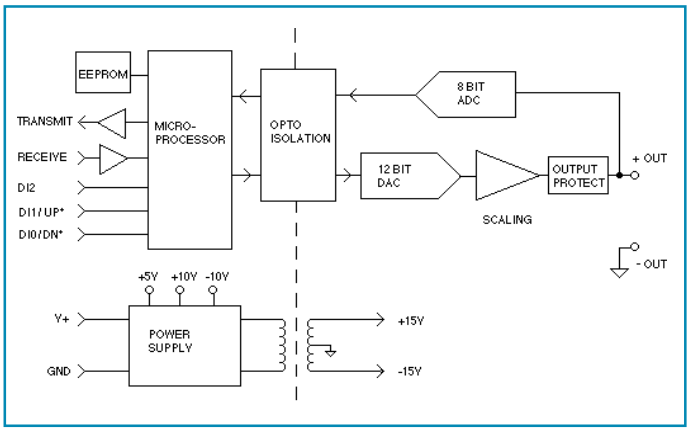

Figure 1. D3000/4000 Block Diagram.

signal level to digital data. The digital data is optically isolated and may be read by the microprocessor. The ADC allows the user to monitor the output signal and ensure its integrity.

The power supply converts the raw 10 to 30V input power into regulated voltages used to operate the module. The power it supplies to the DAC and output circuits is transformer isolated from the input power and communications connections. The transformer and opto-isolators provide an isolation barrier between the output section and the rest of the circuitry. The isolation barrier is helpful in breaking ground loops, isolating troublesome common-mode voltages and protects the host and module in cases where the output may accidentally contact AC power lines.

The combination of an accurate high-resolution DAC and a dedicated microprocessor produces a very powerful system for generating process control signals. The microprocessor provides software addressing for multidrop capability, data formatting in engineering units, limit checking, digital calibration and many other features not possible with unintelligent analog output systems.

The D3000/4000 are compatible with the DGH D1000 and D2000 series and may be mixed in any order.

All modules are supplied with screw terminal plug connectors and captive mounting hardware. The connectors allow system expansion, reconfiguration or repair without disturbing field wiring.

UTILITY SOFTWARE

Complimentary Utility Software is included with each purchase order. The software is compatible with Windows 95, 98, NT 4.0+, 2000 operating systems and distributed on CD-ROM. The Utility Software simplifies configuration of all user-selectable options such as device address, baud rate and filtering constants. The latest version of our software is always downloadable from our web site at www.dghcorp.com.

MANUAL MODE

Manual Up/Down control option provides a local operator interface to control the analog output value independent of the host. As shown in Figure 2, the analog output may be moved up or down by shorting the UP* or DN* inputs to the GND terminal. Grounding both pins at once holds the output at its present value and inhibits any output commands from the communications ports. The control inputs may also be logic signals from other equipment. The manual mode controls the output with a linear slope. The slope rate on D3000 modules is fixed and scaled so that a full-scale output change takes 5 seconds.

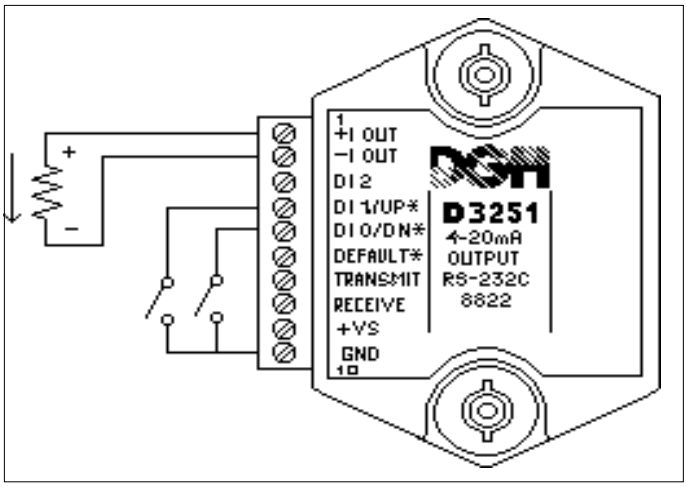

Figure 2. Manual Up/Down Control.

SLOPE CONTROL (D4000)

Most DACs provide a step function when a new output value is desired. That is, the analog output change is instantaneous subject only to DAC settling time. In many applications this characteristic is undesirable and a gradual controlled output slew rate is more appropriate. In applications where controlled output rates are needed, precious host computer time must be used to continually monitor and step the DAC until the desired output is reached.

The D4000 allows controlled output slopes automatically without host computer intervention. User-programmable output slew rates are stored in nonvolatile memory. If a command is sent to the D4000 to change the output value, the output will automatically slope to the new value at the specified rate. The nonvolatile slope value is restored each time the module is powered up.

The D4000 microprocessor controls the output slew rate by updating the DAC at a rate of 1000 conversions per second at precise 1ms intervals. In this manner the DAC is smoothly stepped until the final output value is reached. The DAC's incremental output steps and its conversion rate combine to make the output change appear to be a linear ramp.

MANUAL SLOPE CONTROL (D4000)

The D4000 allows the user to specify the output slope when the output is controlled by the manual UP/DOWN inputs. The manual slope data is stored in EEPROM. The manual slope is independent of the slopes used with the computer controlled output. The manual rate may be changed with the Manual Slope command.

INPUT DATA SCALING (D4000)

All D3000 and D4000 modules are factory set with data values in millivolts or milliamps. The D4000 allows the user to scale the input data to any desired units. In many applications a change in input scaling makes the data easier to read and interpret. For example, a D4000 used to control a valve actuator may be easier to use if the data is scaled with a range of 0-100% rather than 4-20mA.

The input scaling may be changed by using the Maximum and Minimum commands to assign input data values corresponding to the module's maximum and minimum output values.

STARTING VALUE (D4000)

When a D4000 module is powered up from a cold start, the analog output is automatically forced to a user-programmable predetermined starting value. This feature is useful for cold-starting systems in a controlled manner. Usually the starting value is specified as a “safe” condition to protect equipment and material from damage.

WATCHDOG TIMER (D4000)

The D4000 contains a user-programmable software timer to provide an orderly shutdown of the output signal in the event of host computer or communications failure. The timer is preset using the Watchdog Timer command to specify a timer interval in minutes. The timer is continually incremented in software. Each time the D4000 module receives a valid command, the timer is cleared to zero and restarted. If the timer count reaches the preset value, the output will automatically be forced to slew to the starting value using the present output slope rate. The starting value should be programmed to provide a "safe" output value to minimize damage and disruption to the system under control.

ANALOG READBACK (D4000)

The Read Data command in the D3000/4000 series provides a status report of the output of a module. However, the data obtained with this command only indicates the digital data that is being transferred from the onboard microprocessor to the DAC. It does not indicate whether the the DAC output is correct. It cannot detect fault conditions such as shorts or open circuits.

The D4000 series contains an ADC that provides true readback of the analog output signal. The ADC is independent of the DAC. The ADC provides true analog readback data to the microprocessor. While not intended to be a highly accurate measurement of the output signal, the ADC greatly enhances the user’s confidence that the analog output is being produced as intended. Output fault conditions from improper wiring or loads can be easily detected. The ADC also provides a form of redundancy to ensure that the module is working properly.

COMMAND SET

The D3000/4000 series uses a simple command/response protocol for communication. A module must be interrogated by the host to obtain data. A module can never initiate a command sequence. A typical command/response sequence could look like this:

Command: $1RD
Response: *+00075.00

A command is initiated with a command prompt, which may be a dollar sign ($) or a pound sign (#). Following the prompt a single address character must be transmitted. Each module on a communications bus must be setup with a unique address. In this case, the command is directed to module address '1'. The address is followed by a two-or-three-character command which in this case is RD for Read Data. The command is terminated with a carriage return.

After module address '1' receives the command it will respond with the analog output data. The response begins with a response prompt, which is an asterisk (*). The data is read back in a standardized format of sign, 5 digits, decimal point, and 2 more digits. All D3000/4000 modules represent data in the same standard format.

Table 1 shows all of the D3000/4000 commands. For each case, a sample command and response is shown. Note that some commands only respond with an * as an acknowledgment. For clarity, Table 1 separates D4000 commands from the commands that are common to both the D3000 and D4000. Table 1 also separates write protected commands from commands that are not write protected.

For greater data security, options are available to echo transmitted commands and to send and receive checksums. The # command prompt requests a response message from the module that begins with an *, followed by the channel address, command, data (if necessary) and checksum. This response echoes the channel address and command for verification and adds checksum for error checking. Checksum is a two character hexadecimal value that can be added to the end of any command message, regardless of prompt, at your option. Checksum verifies that the message received is exactly the same as the message sent.

The D3000/4000 performs extensive error checking on commands and responds with an error message if necessary. All error messages start with an error prompt (?) followed by the channel address and the error description. In the following example, the D3000/4000 does not recognize 'AB' as a valid command.

Command: $1AB
Response: ?1 COMMAND ERROR

Table 1 D3000/4000 Command Set

Command	Definition	Typical Command Message	Typical Response Message
D3000/4000 Commands			
ACK	Acknowledge	$1ACK	*
AO	Analog Output	$1AO+00020.00	*
DI	Digital Input	$1DI	*0007
HX	Hex Output	$1HX0FFF	*
RAO	Read Analog Output	$1RAO	*+00017.50
RD	Read Data	$1RD	*+00012.34
RHI	Read High Limit	$1RHI	*+00020.00
RID	Read Identification	$1RID	*BOILER
RLO	Read Low Limit	$1RLO	*+00000.00
RMS	Read Manual Slope	$1RMS	*+00004.00
RMX	Read Maximum	$1RMX	*+00020.00
RMN	Read Minimum	$1RMN	*+00000.00
RS	Read Setup	$1RS	*31070140
RSU	Read Setup	$1RSU	*31070140
WE	Write Enable	$1WE	*
The following D3000/4000 commands are Write Protected			
HI	High Limit	$1HI+00015.00	*
ID	Identification	$1IDBOILER	*
LO	Low Limit	$1LO+00004.00	*
RR	Remote Reset	$1RR	*
SU	Setup	$1SU310701C0	*
TMX	Trim Maximum	$1TMX+00020.17	*
TMN	Trim Minimum	$1TMN+00000.95	*
D4000 Commands			
RAD	Read Analog Data	$1RAD	*+00012.34
RPS	Read Present Slope	$1RPS	*+00001.00
RSL	Read Slope	$1RSL	*+00001.00
RSV	Read Starting Value	$1RSV	*+00005.00
RWT	Read Watchdog Timer	$1RWT	*+00010.00
The following D4000 commands are Write Protected			
MS	Manual Slope	$1MS+00001.00	*
MX	Maximum	$1MX+00100.00	*
MN	Minimum	$1MN-00025.00	*
SL	Slope	$1SL+00001.00	*
SV	Starting Value	$1SV+00004.00	*
TRX	Trim Readback Maximum	$1TRX	*
TRN	Trim Readback Minimum	$1TRN	*
WT	Watchdog Timer	$1WT+00010.00	*
WSL	Write Slope To EEPROM	$1WSL+00100.00	*

COMMUNICATIONS

The D3000/4000 is designed to be easy to interface to all popular computers and terminals. All communications to and from the module are performed with printable ASCII characters. This allows the information to be processed with string functions common to most high-level languages such as BASIC. For computers that support standard interfaces such as RS-232C, no special machine language software drivers are necessary for operation. The ASCII format makes system debugging easy with a dumb terminal.

RS-232C is the most widely used communications standard for information transfer between computing equipment. RS-232C versions of the D3000/4000 will interface to virtually any computer without additional hardware. RS-232C is not designed to be used as a multiparty system; however the D3000/4000 modules can be daisy-chained, as shown in Figure 3, to allow many modules to be connected to a single communications port. In this network, any characters transmitted by the host are received by each module in the chain and passed on to the next station until the information is echoed back to the host. In this way all commands given

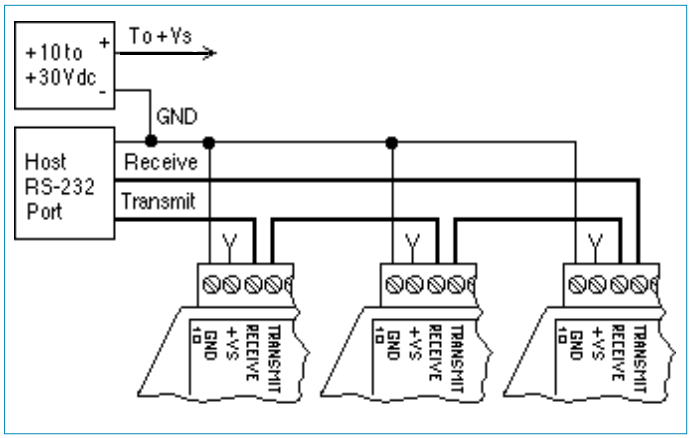

Figure 3. RS-232 Daisy Chain Network.

APPLICATIONS

100 Channel Network

Figure 5 shows 100 analog outputs being controlled by a personal computer and D4000 modules. RS-485 is the obvious choice for high channel count networks because of its multidrop capability.

RS-485 is inherently half-duplex so it cannot transmit and receive at the same time. Each module contains its own unique channel address that you specify. Only the channel requested will respond to your command. The modules work on a command/response protocol so they can never initiate a transmission sequence. Therefore, errors due to bus contention are eliminated.

Since very few computers or terminals have built-in support for RS-485, a DGH A1000 RS-232C/RS-485 Converter is required. RS-485 handles only 32 drivers on each communications port. The DGH A1000 acting as an RS-485 Repeater reshapes and amplifies the RS-485 signal to handle as many as 32 more drivers allowing you to extend the RS-485 network by adding a repeater every 30 channels. The A1000 converter also provides a power supply output of +24V @ 1A to power the modules. The supply protects against overloads and short circuits. To protect the host computer, the host input connection is optically isolated to 1500Vac, and the RS-485 output connections are tied to ground to provide a safe path for static discharge.

Scaling data in RPM

A D4000 voltage output module is used to supply the control signal to a motor speed controller. The full scale range of the D4000 is 0 to +10V. When this voltage is applied to the motor, speed varies from 100 to 3000 RPM. To command the motor to turn at a specified RPM requires some computation to obtain the correct command data.

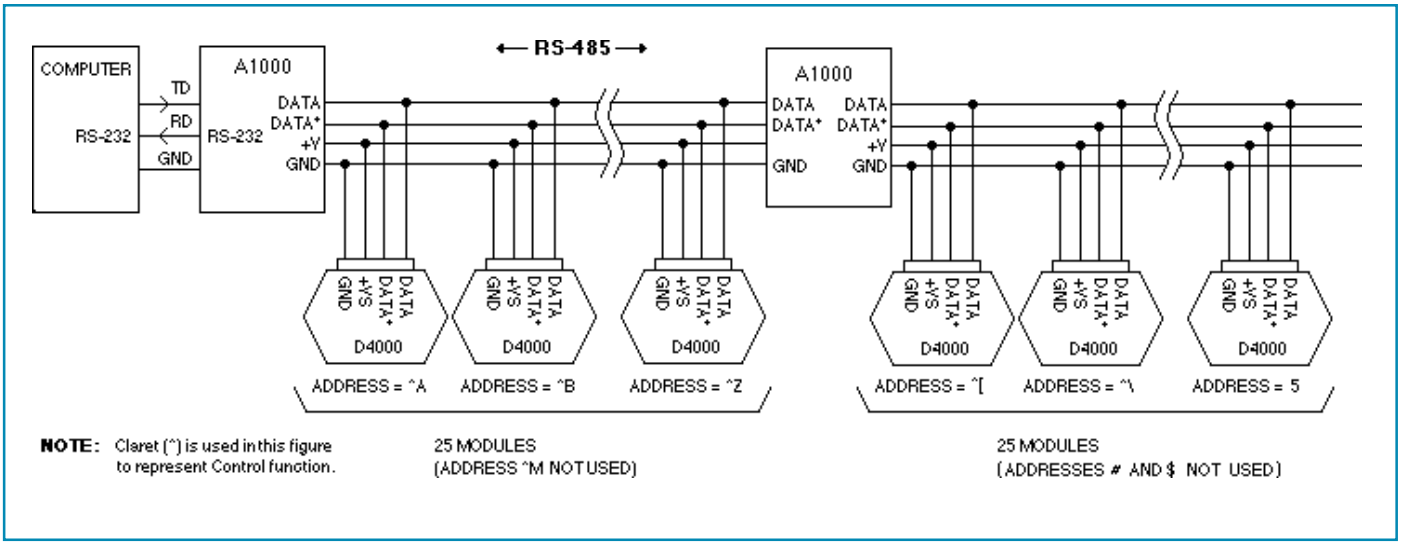

Figure 5a. 100 Channel Network.

by the host are examined by every module in the chain. If a module is correctly addressed and receives a valid command, it transmits a response on the daisy chain network. The response is rippled through any other modules in the chain until it reaches the host.

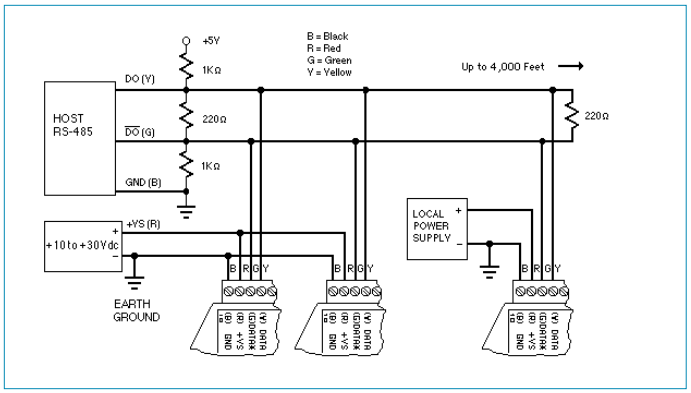

Figure 4. RS-485 Multidrop Network.

RS-485 is a communications standard developed for multi-dropped systems that can communicate at high data rates over long distances, as shown in Figure 4. RS-485 is similar to RS-422 in that it uses a balanced differential pair of wires switching from 0 to 5V to communicate data. RS-485 receivers can handle common mode voltages from -7 to +12V without loss of data, making them ideal for transmission over great distances. RS-485 differs from RS-422 by using one balanced pair of wires for both transmit and receive. Since an RS-485 system cannot transmit and receive at the same time it is a half-duplex system. For systems that require more than a few modules, long wiring distances, or high speed, we recommend RS-485.

For instance, to command the motor to go at 1500 RPM requires an output voltage of 4.666V. This data is difficult to read and interpret. A solution to this problem is to scale the input data directly in units of RPM.

The - full scale output of 0V is assigned the value 100 RPM with the MN command. The + full scale output of +10V is assigned the value 3000 RPM with the MX command. Once the endpoint values are assigned, all other data values are interpolated linearly. Now to set the motor to 1500 RPM requires the analog output command:

$1AO+01500.00

The data is much easier to interpret since the scaling is in RPM. The actual output voltage is +4.666V.

Scaling data in %

A valve actuator accepts a 4-20mA signal: at 4mA the valve is fully closed and at 20mA the valve is fully open. We wish to rescale a D4252 0-20mA module to accept data of 0% closed to 100% open.

The Minimum (MN) command assigns an input data value of 0mA to the - full scale output of the module.

Using the two scaling points (4mA = 0%) and (20mA = 100%) and a bit of computation, we find that 0mA interpolates to a value of -25%. This value is used in the argument of the MN command:

$1MN-00025.00

The maximum scaling point of 20mA is assigned the input value of 100%:

$1MX+00100.00

The module is now scaled in percentage of valve opening. To set the valve to 50% opening:

$1AO+00050.00

In this case the D4000 module produces an output of 12mA, opening the valve halfway.

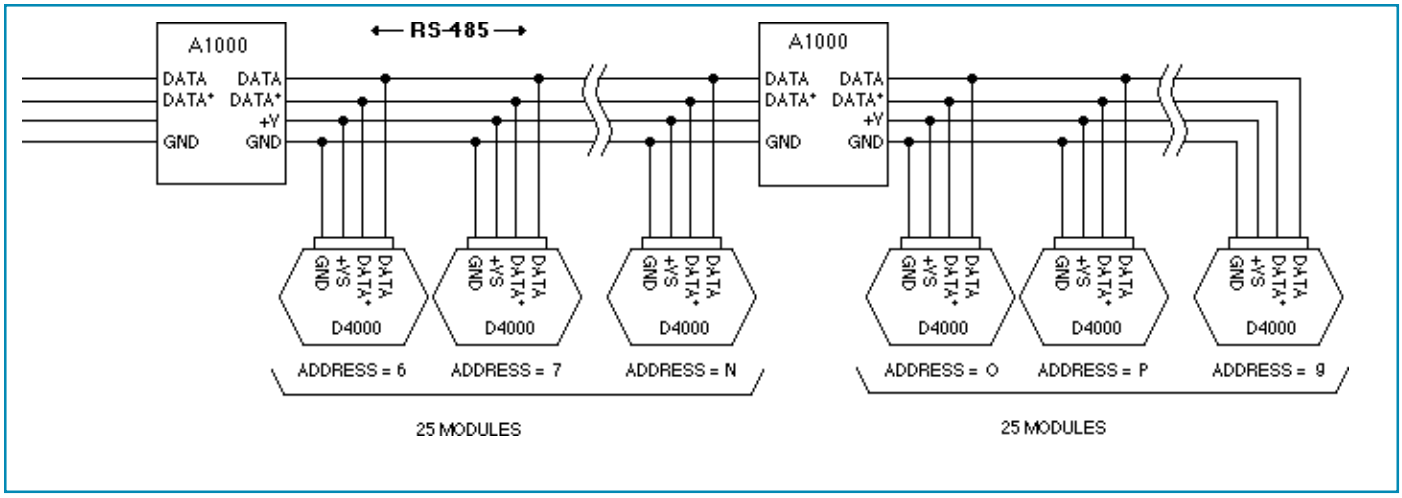

Figure 5b. 100 Channel Network.

Using modems and D3000/4000 modules

The modules can be used with auto-answer modems at remote sites for long-distance operation. A host computer may be used to call a modem and check the status of the process. The modules communicate using RS-232 which is the standard used by modems to communicate with devices such as printers or computers.

The modem must be an auto-answer type. When an incoming telephone call occurs, the modem will pickup the telephone line and establish communication with the computer at the other end. The other modem function required is the Ignore RS-232C DTR line. The modules do not support the Data Transmit Ready line so the modem must ignore it. Since DTR is ignored, the modem and module are always ready for incoming calls. Other modem control functions such as: enable auto redial on busy, enable command mode, etc. are not applicable and may be set to their default settings.

The computer must have either an internal modem or ability to connect to an external modem via an RS-232 serial communications port. Terminal software, or equivalent, is also required to control the modem and communicate with the remote module.

All communications parameters needed to establish communication with the remote module are shown in the following table.

	Terminal software	Computer modem	Remote modem	D4000 module
Baud rate	1200	1200	1200	1200
Parity	N			N
Data bits	7			
Stop bits	1			
Auto-dial		On		
Auto-ans.			On	

Once configured, have the host computer call the site. Upon carrier detection from the remote site, begin communicating with the remote module. After data gathering is complete, use the terminal software to hang up the telephone. Once the telephone is back on the hook, the remote modem will reset itself and await the next call.

Transmitting analog signals over long distances

The D4000 models may be paired with an appropriate D1000 module to transmit analog signals over great distances without a host computer.

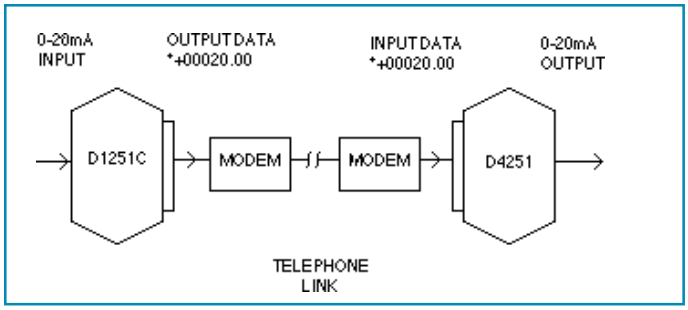

Figure 6. Transmitting analog signals over long distances.

In Figure 6, a D1251C sensor module is used to convert a 0-20mA process signal to ASCII data. The D1251C is operated in continuous output mode to produce data without a host. The D1251C will produce an ASCII output data string after every analog-to-digital conversion. Typical output data shown in Figure 6 is *+00020.00. The data output is connected to a modem which allows the data to be transmitted to another modem which may be located thousands of miles away. The receive modem reconstructs the ASCII data and feeds it to the D4251 module. The D4251 is configured in continuous input mode which allows it to accept the data string of *+00020.00 as an analog output command. The D4251 will respond by producing an output of 20mA.

In this case the process variable sensed by the D1251C may be accurately reproduced by the D4251 anywhere a telephone connection is available. The D4251 output will follow the input signal applied to the D1251C. No host is necessary on either end to provide a continuous signal.

The continuous input configuration may be used to convert analog data from one type to another. In figure 7, a thermocouple signal may be converted to a 0-20mA analog output. The D4251 may be rescaled to any input range, including thermocouple input data. In this case, we rescale the D4251 to produce a 0-20mA signal corresponding to 100°-300°F at the thermocouple.

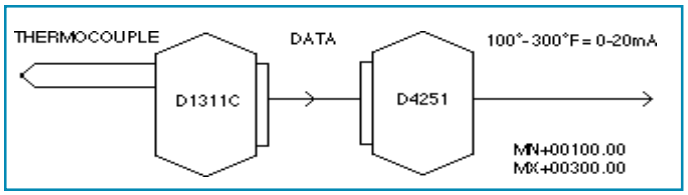

Figure 7. Rescaling a temperature input to a 0-20mA output.

D3000/D4000 Ordering Guide

MODEL	OUTPUT RANGE/INPUT
Voltage Output	
D3121/D4121	±1V Output/RS-232C Input
D3122/D4122	±1V Output/RS-485 Input
D3131/D4131	±5V Output/RS-232C Input
D3132/D4132	±5V Output/RS-485 Input
D3141/D4141	±10V Output/RS-232C Input
D3142/D4142	±10V Output/RS-485 Input
D3161/D4161	0 to 1V Output/RS-232C Input
D3162/D4162	0 to 1V Output/RS-485 Input
D3171/D4171	0 to 5V Output/RS-232C Input
D3172/D4172	0 to 5V Output/RS-485 Input
D3181/D4181	0 to 10V Output/RS-232C Input
D3182/D4182	0 to 10V Output/RS-485 Input
Current Output	
D3251/D4251	0 to 20mA Output/RS-232C Input
D3252/D4252	0 to 20mA Output/RS-485 Input
D3261/D4261	4 to 20mA Output/RS-232C Input
D3262/D4262	4 to 20mA Output/RS-485 Input

Artisan Technology Group

Artisan Technology Group is your source for quality new and certified-used/pre-owned equipment

- FAST SHIPPING AND DELIVERY
- TENS OF THOUSANDS OF IN-STOCK ITEMS
- EQUIPMENT DEMOS
- HUNDREDS OF MANUFACTURERS SUPPORTED
- LEASING/MONTHLY RENTALS
- ITAR CERTIFIED SECURE ASSET SOLUTIONS

SERVICE CENTER REPAIRS
Experienced engineers and technicians on staff at our full-service, in-house repair center

InstraView℠ REMOTE INSPECTION
Remotely inspect equipment before purchasing with our interactive website at ***www.instraview.com*** ↗

WE BUY USED EQUIPMENT
Sell your excess, underutilized, and idle used equipment
We also offer credit for buy-backs and trade-ins
www.artisantg.com/WeBuyEquipment ↗

LOOKING FOR MORE INFORMATION?
Visit us on the web at ***www.artisantg.com*** ↗ for more information on price quotations, drivers, technical specifications, manuals, and documentation

Contact us: (888) 88-SOURCE | sales@artisantg.com | www.artisantg.com