

ARTISAN®
TECHNOLOGY GROUP

Your **definitive** source for quality pre-owned equipment.

Artisan Technology Group
(217) 352-9330 | sales@artisantg.com | artisantg.com

Full-service, independent repair center
with experienced engineers and technicians on staff.

We buy your excess, underutilized, and idle equipment
along with credit for buybacks and trade-ins.

Custom engineering
so your equipment works exactly as you specify.

- Critical and expedited services
- In stock / Ready-to-ship
- Leasing / Rentals / Demos
- ITAR-certified secure asset solutions

Expert team | Trust guarantee | 100% satisfaction

All trademarks, brand names, and brands appearing herein are the property of their respective owners.

Visit our website - *Click HERE*

PRODUCT DATA SHEET

nEXT85 TURBOMOLECULAR PUMP

edwardsvacuum.com

nEXT85, one of the smaller members of our nEXT turbomolecular pump family, has been extended to include variants that can be mounted in any orientation.

These variants deliver the same performance characteristics and reliability as our current pumps, but also provide further flexibility for applications where it is required.

In addition to enhanced performance nEXT85 benefits from the same service and operational functionalities from the larger nEXT range, including field serviceability and in-built intelligence, for a truly class leading product.





FEATURES AND BENEFITS

- Any orientation for flexibility of use
- Class leading performance in a reduced footprint
- Enhanced customer choice with standard and compression focused variants
- Increased operating envelope maximised by Edwards' patented direct impeller temperature measurement technology
- The bearing and oil cartridge in the nEXT85 are fully end-user serviceable
- Intelligent pumps with included micro USB port and Edwards nST software allowing pump monitoring, control and configuration
- Full suite of tailored accessories

TECHNICAL DATA

	nEXT85D NW40	nEXT85H NW40	nEXT85D ISO63	nEXT85H ISO63	nEXT85D CF63	nEXT85H CF63	nEXT85D ISO100	nEXT85H ISO100
Main inlet pumping speed								
N_2 ls^{-1}	47	47	84	84	84	84	86	86
He ls^{-1}	61	61	78	78	78	78	80	78
H_2 ls^{-1}	49	44	60	54	60	54	60	54
Ar ls^{-1}	44	44	80	80	80	80	84	84
Peak compression ratio from the backing port to the main inlet port								
N_2	$>10^{11}$	$>10^{11}$	$>10^{11}$	$>10^{11}$	$>10^{11}$	$>10^{11}$	$>10^{11}$	$>10^{11}$
He	$8x10^6$	$2x10^7$	$8x10^6$	$2x10^7$	$8x10^6$	$2x10^7$	$8x10^6$	$2x10^7$
H_2	$2x10^5$	$5x10^5$	$2x10^5$	$5x10^5$	$2x10^5$	$5x10^5$	$2x10^5$	$5x10^5$
Ar	$>10^{11}$	$>10^{11}$	$>10^{11}$	$>10^{11}$	$>10^{11}$	$>10^{11}$	$>10^{11}$	$>10^{11}$
Ultimate pressure (mbar) (Torr)	$<5x10^{-9}$ $<3.8x10^{-9}$	$<5x10^{-9}$ $<3.8x10^{-9}$	$<5x10^{-9}$ $<3.8x10^{-9}$	$<5x10^{-9}$ $<3.8x10^{-9}$	$<5x10^{-10}$ $<3.8x10^{-10}$	$<5x10^{-10}$ $<3.8x10^{-10}$	$<5x10^{-9}$ $<3.8x10^{-9}$	$<5x10^{-9}$ $<3.8x10^{-9}$
Mass	2.9 Kg	2.9 Kg	3.0Kg	3.0Kg	4.4Kg	4.4Kg	3.2Kg	3.2Kg

	Forced air cooling (20°C Ambient)	Natural convection (35°C Ambient)	Forced air cooling (40°C Ambient)	Water cooling (40°C Ambient)
Maximum continuous backing pressure at ultimate inlet pressure (mbar)				
Nitrogen	18	10	11	17
Maximum input flow sccm:				
Nitrogen	60	22	25	42
Argon	21	7	7	15
Helium	232	96	128	191
Operation attitude	Vertical and upright to horizontal ± 2°			



DIMENSIONS

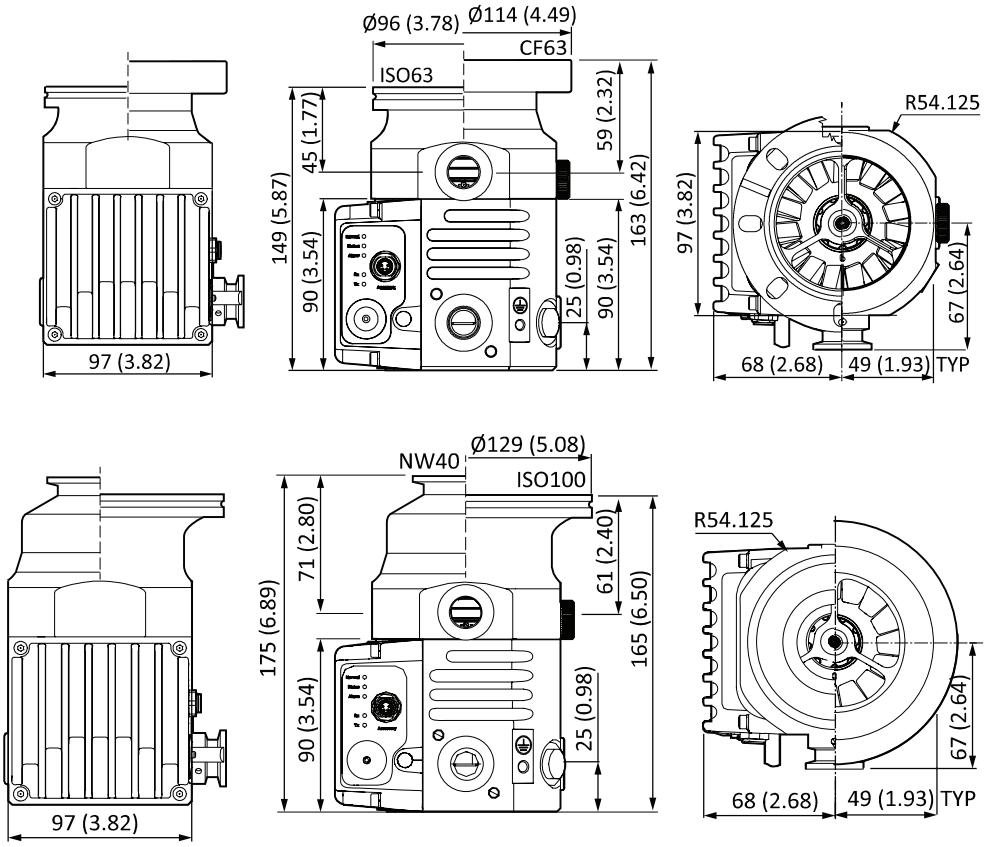

ORDER INFORMATION

nEXT85 Product description	Order number
nEXT85D ISO63 NW16 80W	B8G210B01
nEXT85D CF63 NW16 80W	B8G210C01
nEXT85D ISO100 NW16 80W	B8G210101
nEXT85D NW40 NW16 80W	B8G210A01
nEXT85D ISO100 NW25 80W	B8G240101
nEXT85ID ISO63 NW16/16 80W	B8G211B01
nEXT85ID ISO63 NW16/25 80W	B8G214B01
nEXT85H ISO63 NW16 80W	B8G410B01
nEXT85H CF63 NW16 80W	B8G410C01
nEXT85H NW40 NW16 80W	B8G410A01
nEXT85H ISO100 NW16 80W	B8G410101
nEXT85IH CF63 NW16/16 80W	B8G411C01
nEXT85D ISO63 NW16 80W AO	B8C210B01
nEXT85D CF63 NW16 80W AO	B8C210C01
nEXT85D ISO100 NW16 80W AO	B8C210101
nEXT85D NW40 NW16 80W AO	B8C210A01
nEXT85H ISO63 NW16 80W AO	B8C410B01
nEXT85H CF63 NW16 80W AO	B8C410C01
nEXT85H ISO100 NW16 80W AO	B8C410101
nEXT85H NW40 NW16 80W AO	B8C410A01

PERFORMANCE GRAPH

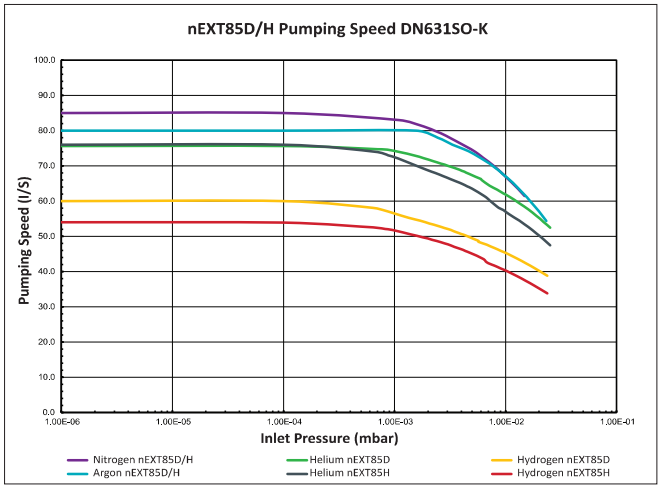

ORDER INFORMATION

Accessories and spares	Product description	Order number
Controller	TAG controller	D39592000
	TAG power supply	D39592800
	TIC100 turbo and instrument controller	D39721000
Extension cables	1m pump to controller cable	D39700835
	3m pump to controller cable	D39700836
	5m pump to controller cable	D39700837
Power cables	2m electrical supply cable UK plug	D40013025
	2m electrical supply cable EU plug	D40013030
	2m electrical supply cable US plug	D40013120
Cooling	WCX85 water cooling kit (4 position)	B8G200833
	AXC85 air cooler connector fitted	B8G200820
	AXC85 air cooler bare wired	B8G200821
Venting	N/O TAV5 vent valve connector fitted	B8G200834
	N/C TAV5 vent valve connector fitted	B8G200835
	N/O TAV5 vent valve bare wired	B58066010
	N/C TAV5 vent valve bare wired	B58066040
	Vent port adaptor	B58066011
Bakeout	CF63 flange heater 110V	B8G200823
	CF63 flange heater 240V	B8G200824
Service	Bearing exchange tool kit	B8G200827
	Bearing exchange tool kit AO	B8E200485
	Oil cartridge kit	B8G200828
	Oil cartridge kit AO	B8C200828
	Bearing and oil cartridge kit	B8G200811
	Bearing and oil cartridge kit AO	B8C200811
	Bearing replacement tool kit	B8G200840
Miscellaneous	PRX10 purge restrictor	B58065001
	Accessory "Y" adaptor	B8G200837
	Accessory cable 90 degree / extension	B8G200836
	Accessory connector bare wired	B8G200839
	nEXT85 / EXT75DX base mounting adaptor	B8G200838

Publication Number: 3601 0243 01
© Edwards Limited 2023. All rights reserved Edwards and the Edwards logo are trademarks of Edwards Limited

Whilst we make every effort to ensure that we accurately describe our products and services, we give no guarantee as to the accuracy or completeness of any information provided in this datasheet.

Edwards Ltd., registered in England and Wales.
No. 6124750, registered office: Innovation Drive, Burgess Hill, West Sussex, RH15 9TW, UK.

Artisan Technology Group is an independent supplier of quality pre-owned equipment

Gold-standard solutions

Extend the life of your critical industrial, commercial, and military systems with our superior service and support.

We buy equipment

Planning to upgrade your current equipment? Have surplus equipment taking up shelf space? We'll give it a new home.

Learn more!

Visit us at **artisantg.com** for more info on price quotes, drivers, technical specifications, manuals, and documentation.

Artisan Scientific Corporation dba Artisan Technology Group is not an affiliate, representative, or authorized distributor for any manufacturer listed herein.

We're here to make your life easier. How can we help you today?

(217) 352-9330 | sales@artisantg.com | artisantg.com

ARTISAN® TECHNOLOGY GROUP