

ARTISAN®
TECHNOLOGY GROUP

Your **definitive** source for quality pre-owned equipment.

Artisan Technology Group
(217) 352-9330 | sales@artisantg.com | artisantg.com

Full-service, independent repair center
with experienced engineers and technicians on staff.

We buy your excess, underutilized, and idle equipment
along with credit for buybacks and trade-ins.

Custom engineering
so your equipment works exactly as you specify.

- Critical and expedited services
- In stock / Ready-to-ship
- Leasing / Rentals / Demos
- ITAR-certified secure asset solutions

Expert team | Trust guarantee | 100% satisfaction

All trademarks, brand names, and brands appearing herein are the property of their respective owners.

Visit our website - *Click HERE*

B811-00-880
Issue E

Instruction Manual

nEXT Pump Accessories



EDWARDS

www.edwardsvacuum.com

Declaration of Conformity

We, Edwards,
Innovation Drive,
Burgess Hill,
West Sussex,
RH15 9TW, UK

declare under our sole responsibility, as manufacturer and person within the EU authorised to assemble the technical file, that the product(s)

B8G200823	Flange Heater 110 V 90 W
B8G200824	Flange Heater 240 V 90 W

to which this declaration relates is in conformity with the following standard(s) or other normative document(s)

EN60335-1:2012	Household and similar electrical appliances – Safety – General requirements

and fulfils all the relevant provisions of

2014/35/EU	Low Voltage Directive
2011/65/EU	Restriction of Certain Hazardous Substances (RoHS) Directive

Note: This declaration covers all product serial numbers from the date this Declaration was signed onwards.

Mr Peter Meares
Senior Technical Support Manager, General Vacuum

15.03.2017, Burgess Hill
Date and Place

This product has been manufactured under a quality management system certified to ISO 9001:2008

Contents

Section Page

1 Introduction 1

1.1 Definition of Warnings and Cautions 1
1.2 Safety symbols 1
1.3 Installation and operation safety 2
1.4 nEXT85 motor controller auxiliary connector socket 2

2 Flange heater 7

2.1 Description 7
2.2 Installation 8
2.2.1 Unpack and inspect 8
2.2.2 Fit the flange heater to the pump 8
2.2.3 Electrical connection to an independent electrical supply 8
2.3 Operation 8

3 ACX nEXT Air Coolers 11

3.1 Description 11
3.2 Technical data 11
3.3 Installation 11
3.3.1 Unpack and inspect 11
3.3.2 Side (or Radial) mounting 11
3.3.3 Axial mounting 13
3.3.4 Combined radial and axial mounting 13
3.4 Electrical connection 15
3.4.1 Power supply requirements 15
3.5 Operation 16

4 nEXT85 Air Cooler 17

4.1 Description 17
4.2 Technical data 17
4.3 Installation 17
4.3.1 Unpack and inspect 17
4.4 Side (or radial) mounting 17
4.4.1 Axial mounting 18
4.4.2 Combined radial and axial mounting 18
4.5 Electrical connection 18
4.5.1 Power supply requirements 19
4.6 Operation 19

5 TAV vent-valve 21

5.1 Description 21
5.2 nEXT85 TAV5 vent-valve 21
5.3 Technical data 22
5.4 Installation 24
5.4.1 Unpack and inspect 24
5.4.2 Fit the TAV vent-valve to the pump 24
5.4.3 Electrical connection 25
5.5 Operation 26

6 Inlet-screens 27

6.1 Description 27
6.2 Technical data 27

cg/0086/02/18

© Edwards Limited 2018. All rights reserved.
Edwards and the Edwards logo are trademarks of Edwards Limited.

Contents

6.3 Installation 27
6.3.1 Unpack and inspect 27
6.3.2 Fit or remove the inlet-screen 28

7 PRX10 purge-restrictor 31

7.1 Description 31
7.2 Technical data 31
7.3 Installation 31
7.3.1 Unpack and inspect 31
7.3.2 Fit the purge-restrictor 31
7.4 Operation 32
7.4.1 General 32
7.4.2 Calibration of the PRX10 purge-restrictor for different purge gases 32

8 Vent-port adaptor 35

8.1 Description 35
8.2 Technical data 36
8.3 Installation 36
8.3.1 Unpack and inspect 36
8.3.2 Connect the vent-port adaptor 36

9 VRX vent-restrictor 37

9.1 Description 37
9.2 Technical data 37
9.3 Installation 37
9.3.1 Unpack and inspect 37
9.3.2 VRX vent-restrictor selection 37
9.3.3 Fit the vent-restrictor 37

10 nEXT water-cooler 39

10.1 Description 39
10.2 Technical data 39
10.3 Installation 39
10.3.1 Unpack and inspect 39
10.3.2 Fit the water-cooler to the pump 39
10.4 Operation 40

11 nEXT Interface Cable 41

11.1 Description 41
11.2 Technical data 41
11.3 Installation 41
11.3.1 Unpack and inspect 41
11.3.2 Fit the interface cable to the pump 41
11.4 Operation 42

12 Auxiliary connectors 43

12.1 Auxiliary connector 43
12.2 Auxiliary extension cable 43
12.3 Auxiliary ‘Y’ cable adaptor 44

13 Base mounting adaptor 45

13.1 Description 45
13.2 Installation 45
13.2.1 Unpack and inspect 45

© Edwards Limited 2018. All rights reserved.
Edwards and the Edwards logo are trademarks of Edwards Limited.

13.2.2 Fit the base mounting adaptor to the pump 45

14 Maintenance 47

For return of equipment, complete the HS Forms at the end of this manual.

Illustrations

Figure Page

1 Accessories for nEXT pumps - general view (nEXT 240D pump shown) 3
2 Accessories for nEXT pumps -general view continued (nEXT240D DN100CF shown) 4
3 Accessories for nEXT85 pumps 5
4 nEXT85 auxiliary connector 6
5 nEXT85 auxiliary connector showing pin numbers 6
6 ACX nEXT air cooler installation, alternative mounting positions 12
7 ACX nEXT radial and axial air cooler installation 14
8 nEXT connector plug and socket 16
9 TAV vent-valve dimensions (mm) 23
10 Fitting the TAV vent-valve 24
11 TAV vent-valve connections 26
12 Integral mesh centring ring inlet-screen 28
13 Mesh inlet-screen 29
14 PRX10 purge-restrictor 33
15 Vent-port adaptor 35
16 Extended vent-port adaptor 35
17 VRX vent-restrictor 38
18 nEXT water-cooling 40
19 nEXT interface cable 42
20 Auxiliary connector 43
21 Auxiliary extension cable 43
22 Auxiliary ‘Y’ cable adaptor 44

© Edwards Limited 2018. All rights reserved.
Edwards and the Edwards logo are trademarks of Edwards Limited.

Contents

Tables

Table		Page
1	nEXT85 monitor controller technical data	5
2	nEXT85 auxiliary connector pin data	6
3	CF63, CF100 and CF160 flange heaters technical data	7
4	CF63, CF100 and CF160 flange heaters fuse ratings	7
5	CF63, CF100 and CF160 flange heaters part numbers	7
6	ACX nEXT Air Cooler technical data	11
7	ACX nEXT air cooler power requirements	15
8	nEXT85 air cooler kits	17
9	nEXT85 air cooler technical data	17
10	nEXT85 air cooler power requirements	19
11	TAV vent-valve and vent port adaptor	21
12	TAV vent-valve technical data	22
13	nEXT85 TAV5 vent-valve technical data	22
14	Inlet-screens technical data	27
15	PRX10 purge-restrictor technical data	31
16	Nitrogen flow rate through the PRX10 purge-restrictor	32
17	Vent-port adaptor technical data	36
18	Extended vent-port adaptor technical data	36
19	Vent-restrictor technical data	37
20	nEXT water-cooler technical data	39
21	nEXT interface cable technical data	41
22	nEXT85 Auxiliary connector	43
23	nEXT85 auxiliary connector configuration	43
24	Auxiliary extension cable	44
25	Auxiliary ‘Y’ cable adaptor	44
26	Requirements for securing the pump in the event of seizure	45

Associated publications

Publication title	Publication number
Vacuum pump and vacuum system safety	P400-40-100
nEXT85 instruction manual	B8G0-00-880

© Edwards Limited 2018. All rights reserved.
Edwards and the Edwards logo are trademarks of Edwards Limited.

1 Introduction

1.1 Definition of Warnings and Cautions

Important safety information is highlighted as WARNING and CAUTION instructions; these instructions must be obeyed.

The use of WARNINGS and CAUTIONS is defined below.

WARNING



Warnings are given where failure to observe the instruction could result in injury or death to people. The actual symbol shown varies according to the hazard.

CAUTION

Cautions are given where failure to observe the instruction could result in damage to the equipment, associated equipment or process.

1.2 Safety symbols

The safety symbols on the products denote areas where care and attention is required.

The following safety symbols may be used on the pump or its accessories and throughout the product documentation.



Warning/Caution

An appropriate safety instruction should be followed or caution to a potential hazard exists.



Warning Dangerous Voltage

Indicates hazards arising from dangerous voltages.



Warning Hot Surfaces

Indicates that the marked item may be hot and should not be touched without taking precautions.

© Edwards Limited 2018. All rights reserved.
Edwards and the Edwards logo are trademarks of Edwards Limited.

1.3 Installation and operation safety

WARNING



You must use the procedures described in this manual to install your accessory, and you must obey all safety instructions and take note of all appropriate precautions. If you do not, you can damage the accessory or other equipment and can cause injury to people.

WARNING



The user of the nEXT pump system is responsible for the safe operation and monitoring of the system.

WARNING



Before you install the accessory, ensure that you switch off the pump and isolate the controller/podule as described below.

Before you install your accessory, you must:

- Switch off the nEXT pump and wait until the pump has stopped rotating.
- Isolate the pump controller from the electrical supply.

1.4 nEXT85 motor controller auxiliary connector socket

The nEXT85 motor controller contains the drive electronics that control the pump operation, the TAV vent-valve and the air cooler.

The nEXT85 pump has a 4-way auxiliary connector socket on the side of the controller where the TAV vent-valve and the air cooler can be plugged into. The mating plug for this connector is available pre-fitted to a number of accessories.

The connector is intended to drive a vent-valve and/or fan. The connector is shown in Figures 4 and 5. Table 2 shows the polarity of the pins marked when the vent-valve or fan are energised.

The auxiliary connector output is regulated to 24 V d.c. to control the accessories, even when the pump is operating from a 48 V d.c. supply and is protected against overload and short circuits. If the auxiliary load current exceeds the value given in Table 1 the output will shut down to protect the motor controller.

© Edwards Limited 2018. All rights reserved.
Edwards and the Edwards logo are trademarks of Edwards Limited.

Figure 1 - Accessories for nEXT pumps - general view (nEXT 240D pump shown)

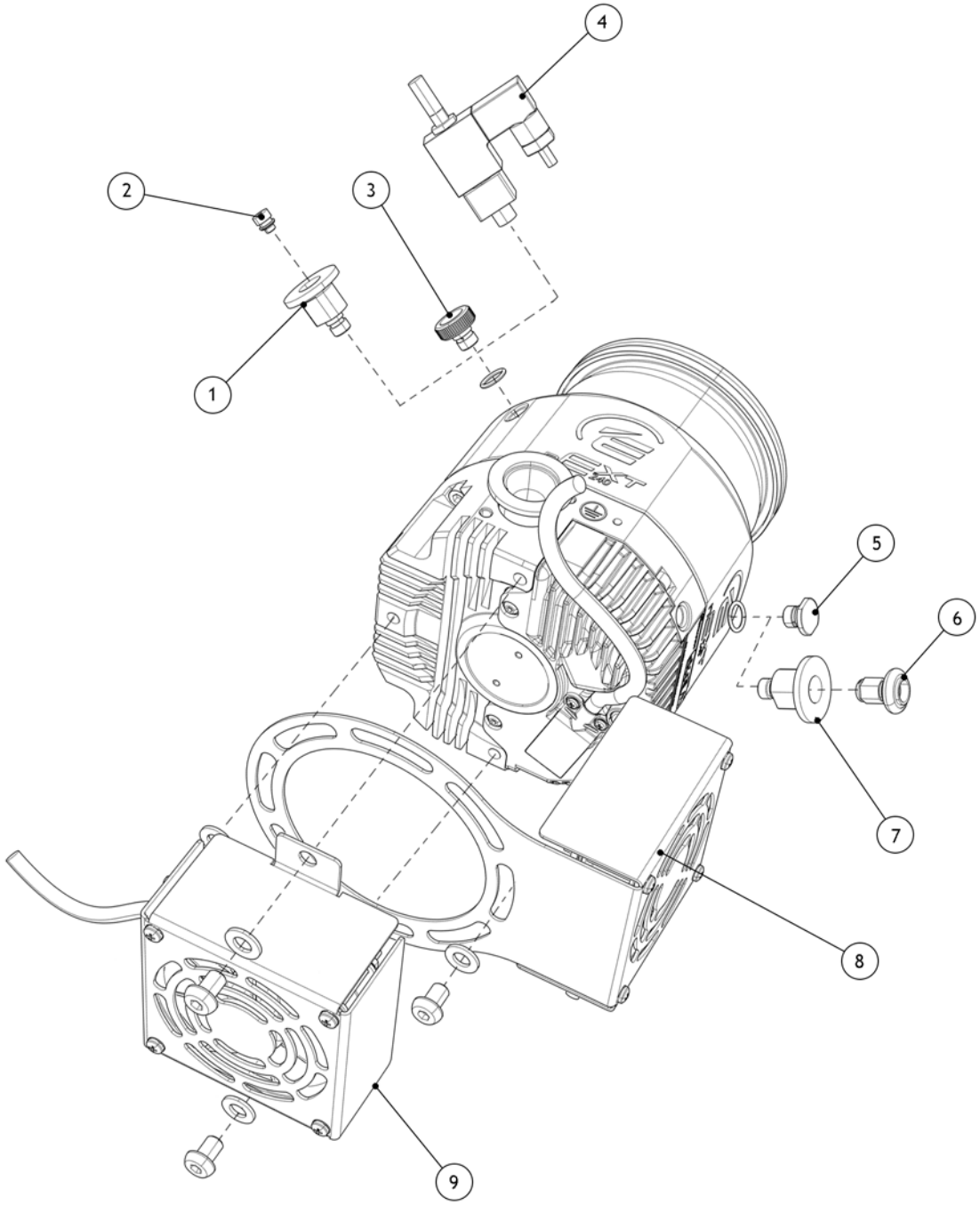

1. DN10NW Adaptor
2. VRX vent-restrictor
3. Manual vent-valve (fitted)
4. TAV Solenoid vent-valve
5. Purge plug (fitted)
6. PRX purge-restrictor
7. DN10NW Adaptor
8. ACX nEXT air cooler (Radial)
9. ACX nEXT ait cooler (Axial)

IA/041/05/09

© Edwards Limited 2018. All rights reserved.
Edwards and the Edwards logo are trademarks of Edwards Limited.

Figure 2 - Accessories for nEXT pumps -general view continued (nEXT240D DN100CF shown)

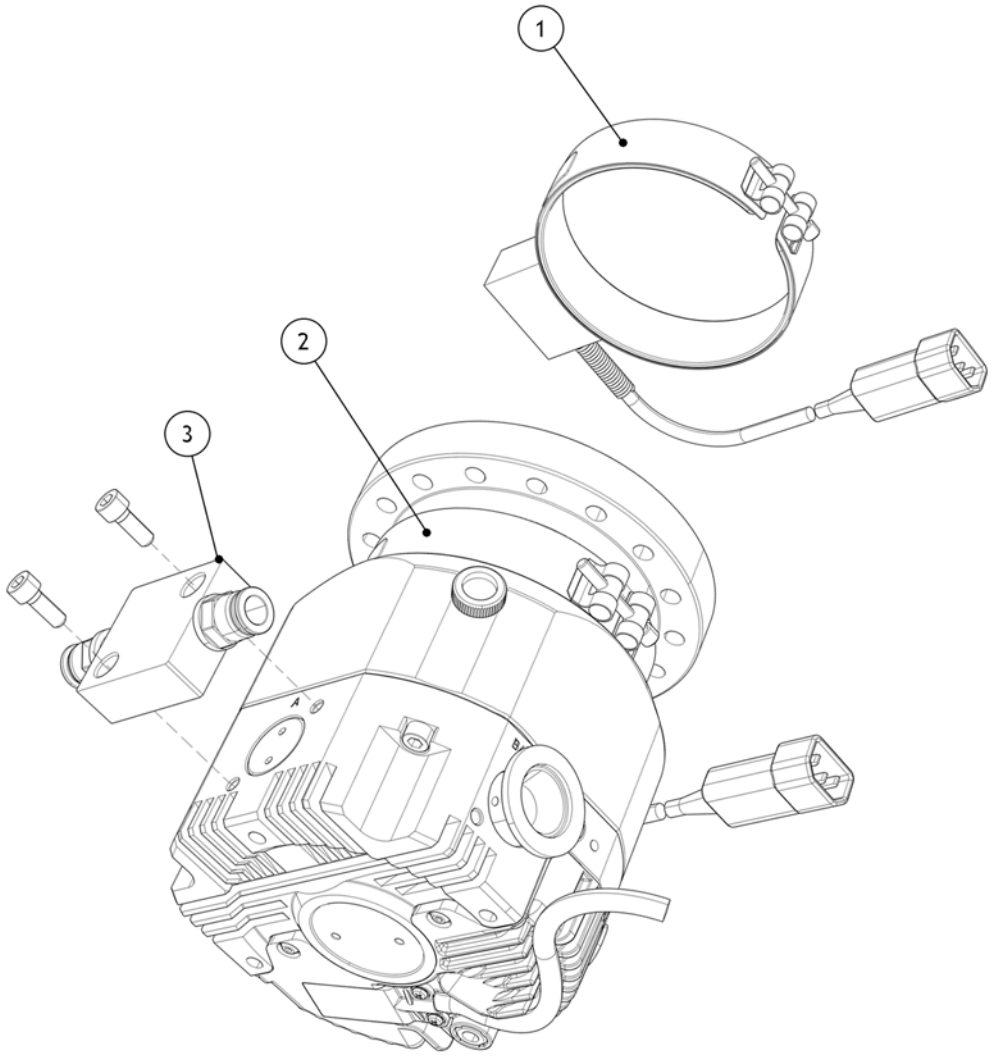

1. BX 250 Bake out band (DN100CF envelope shown)
2. BX 250 Bake out band position
3. WCX Water cooling accessory

© Edwards Limited 2018. All rights reserved.
Edwards and the Edwards logo are trademarks of Edwards Limited.

Figure 3 - Accessories for nEXT85 pumps

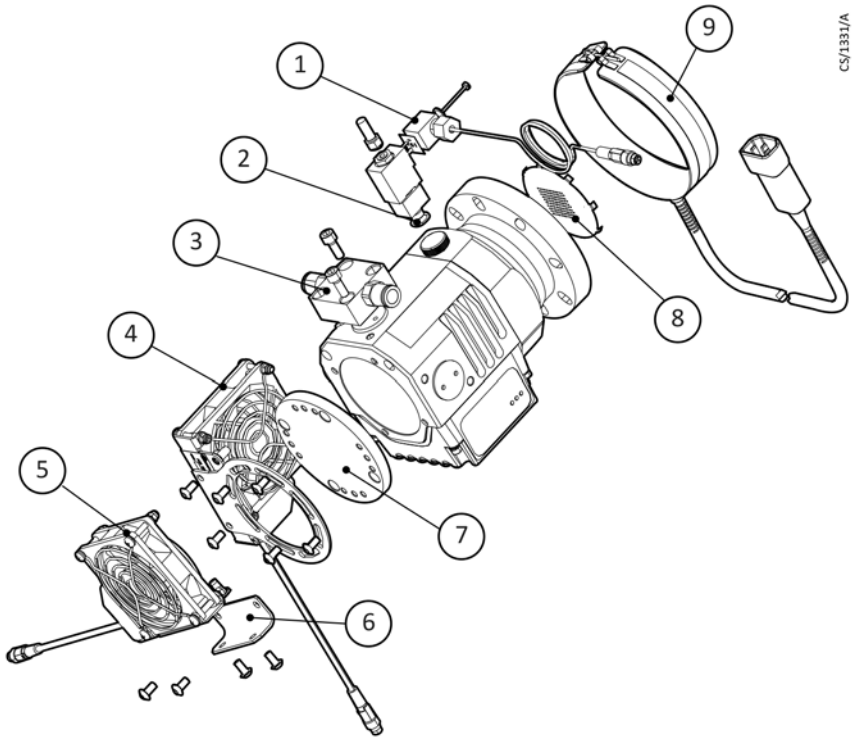

1. TAV solenoid vent-valve
2. Manual vent-valve
3. nEXT85 water cooler
4. ACX85 radial air cooler
5. ACX85 axial air cooler
6. ACX axial air cooler mounting bracket
7. Base mounting adaptor
8. Inlet screen (CF63 shown)
9. Flange heater band

Table 1 - nEXT85 monitor controller technical data

Description	Data
Connector plug	Phoenix part number SACC-DSI-M 8FS-4CON-M12/0.5
Voltage output	24 V d.c. -25%, +10% (18 V d.c. to 26.4 V d.c.)
Current output	500 mA

© Edwards Limited 2018. All rights reserved.
Edwards and the Edwards logo are trademarks of Edwards Limited.

Figure 4 - nEXT85 auxiliary connector

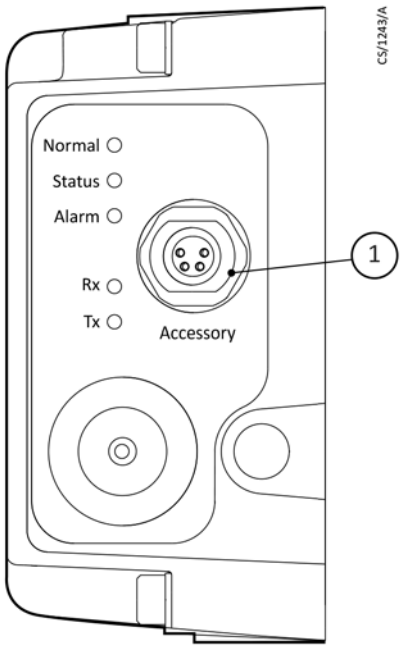

1. Auxiliary connector

Figure 5 - nEXT85 auxiliary connector showing pin numbers

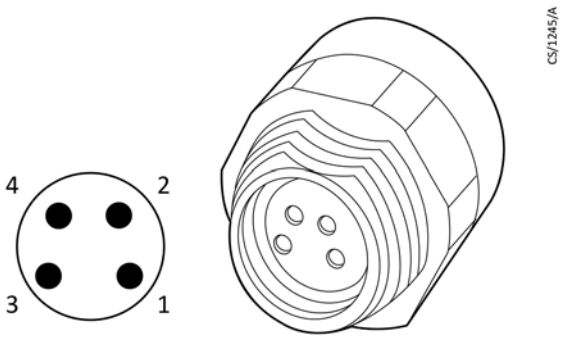

Table 2 - nEXT85 auxiliary connector pin data

Pin number	Signal	Polarity
1	0 V return	Negative
2	Aux 1	Positive
3	Aux 2	Positive
4	Chassis	Chassis

© Edwards Limited 2018. All rights reserved.
Edwards and the Edwards logo are trademarks of Edwards Limited.

2 Flange heater

2.1 Description

An Edwards CF63, CF100 or CF160 Flange Heater (Figure 3, item 9) can be fitted to the nEXT turbo pump, or any turbo pump which has a CF63, CF100 or CF160 flange, to increase the rate of degassing of the pump body and to achieve faster pump down and lower ultimate pressure. A flange heater should only be fitted to CF flanged pumps intended for use at ultra-high vacuum.

CF63, CF100 and CF160 Flange Heaters are available for use with electrical supplies of 110 V a.c. or 240 V a.c. variant from any suitable electrical supply.

Table 3 - CF63, CF100 and CF160 flange heaters technical data

Electrical supply	110 to 120 V a.c., 50/60 Hz or 200 to 240 V a.c., 50/60 Hz		
Cable length	3 m		
Termination	IEC C14		
Maximum flange operating temperature	120 °C		
Equipment type	Fixed equipment for indoor use only		
Flange heater type	CF63	CF100	CF160
Approximate mass	0.62 kg	0.66 kg	0.72 kg
Minimum diameter	115 mm	152 mm	202 mm
Width of band	26 mm	26 mm	26 mm
Input power	90 W	80 W	80 W

Table 4 - CF63, CF100 and CF160 flange heaters fuse ratings

Fuse rating CF63:	
110 to 120 V	1.0 A
200 to 240 V	0.5 A
Fuse rating CF100:	
110 to 120 V	0.8 A
200 to 240 V	0.33 A
Fuse rating CF160:	
110 to 120 V	0.8 A
200 to 240 V	0.33 A

Table 5 - CF63, CF100 and CF160 flange heaters part numbers

Description	Part Number
CF63 Flange heater 110 V 90 W	B8G200823
CF63 Flange heater 240 V 90 W	B8G200824
CF100 Flange heater 120 V 80 W	B58052073
CF100 Flange heater 240 V 80 W	B58052074
CF160 Flange heater 120 V 80 W	B58052075
CF160 Flange heater 240 V 80 W	B58052076

© Edwards Limited 2018. All rights reserved.
Edwards and the Edwards logo are trademarks of Edwards Limited.

2.2 Installation

2.2.1 Unpack and inspect

Remove all packing materials and protective covers and check the flange heater.

If the flange heater is damaged, notify your supplier and the carrier in writing within three days; state the Item Number of the flange heater together with your order number and your supplier's invoice number. Retain all packing materials for inspection. Do not use the flange heater if it is damaged.

2.2.2 Fit the flange heater to the pump

WARNING



Before installing the accessory, ensure that the pump is switched off and isolated as described in this section.

Refer to Figure 3.

Switch off the pump, isolate the pump controller from the electrical supply and wait until the pump has stopped rotating.

The flange heater should be clamped securely to the outside of the CF63, CF100 or CF160 flange. It should be mounted so that it is not tilted in assembly, but is placed squarely against the surface to be heated. Air gaps as a result of poor clamping result in poor heat transfer, excessive heat loss and short heater life.

The flange heater should be clamped securely and squarely to the surface to be heated, run at operating temperature and retightened to correct for the effects of expansion.

2.2.3 Electrical connection to an independent electrical supply

Connect the flange heater directly to an appropriate electrical supply.

Always ensure that the electrical supply to the flange heater is interlocked so that it is automatically switched off whenever the nEXT pump operates below normal speed. Check that the rating of the fuse fitted within the electrical supply corresponds to the fuse rating listed in Table 4.

2.3 Operation

WARNING



Do not operate the flange heater when it is not installed on a pump. Without the cooling effect of the pump body, the temperature of the band can rise to 300 °C with the danger of insulation breakdown and fire.

WARNING



Do not touch the flange heater when it is switched on as it can get very hot during operation.

CAUTION

When using the flange heater accessory either air cooling at a maximum of 20°C ambient or water cooling at a maximum of 40°C must be used. If using the heater accessory in combination with baking heaters on the vacuum system do not allow the temperature of the CF63, CF100 or CF160 flange to exceed 120°C.

© Edwards Limited 2018. All rights reserved.
Edwards and the Edwards logo are trademarks of Edwards Limited.

When using the flange heater ensure that there is adequate cooling for the pump and adequate ventilation for the flange heater.

Use the following procedure for operating the flange heater:

1. Ensure the turbo pump is running at its maximum rotation speed with no load before the flange heater is switched on.
2. Switch on the flange heater.
3. Run the flange heater for a minimum of 24 hours to ensure that the optimum vacuum pressure is achieved as detailed in the product instruction manual.
4. Switch off the flange heater before any load is applied to the pumping system.

© Edwards Limited 2018. All rights reserved.
Edwards and the Edwards logo are trademarks of Edwards Limited.

This page has been intentionally left blank.

© Edwards Limited 2018. All rights reserved.
Edwards and the Edwards logo are trademarks of Edwards Limited.

3 ACX nEXT Air Coolers

3.1 Description

The ACX nEXT air cooler is an enclosed 24 V d.c. motor electric fan and a fixing bracket assembly which can be easily fitted to the nEXT range of pumps via bolt holes in the base of the pump.

The ACX nEXT air coolers are available for both radial and axial mounting. It is possible to use both variants simultaneously if so desired and space allows. TICs can provide power for one fan only.

3.2 Technical data

Table 6 - ACX nEXT Air Cooler technical data

Electrical supply	20 to 28 V d.c.
Cable cores	Red (+20 - 28 V) Black (0 Volts return) Yellow and Green (screen)
Pollution degree	EN61010 Part 1 Category 2
Power consumption	2.7 Watts
Noise emissions	39 dBA (per fan)

3.3 Installation

3.3.1 Unpack and inspect

Remove all packing and materials and protective covers and check the ACX air cooler.

If the ACX air cooler is damaged, notify your supplier and the carrier in writing within three days; state the Item Number of the ACX air cooler together with your order number and your supplier's invoice number. Retain all packing materials for inspection. Do not use the ACX air cooler if it is damaged.

3.3.2 Side (or Radial) mounting

WARNING



Before you install the accessory, ensure that you switch off and isolate the pump.

Refer to Figure 6 and 7.

1. Switch off pump; wait until the pump has stopped rotating. Isolate the pump drive from the electrical supply.
2. Remove the rubber mounting feet from the base of the pump.
3. Using 4 off M8 x 12 mm button head screws supplied. Fit the ACX radial air cooler mounting bracket to the base of the pump as shown on Figure 7. Ensure the fixing screws are secure. To ensure the radial air cooler works most effectively it is recommended that the fan should be placed directly opposite the pump drive, as shown in Figure 7. This ensures adequate cooling of the nEXT drive. Alternative mounting positions are available as shown in Figure 6.

© Edwards Limited 2018. All rights reserved.
Edwards and the Edwards logo are trademarks of Edwards Limited.

Figure 6 - ACX nEXT air cooler installation, alternative mounting positions

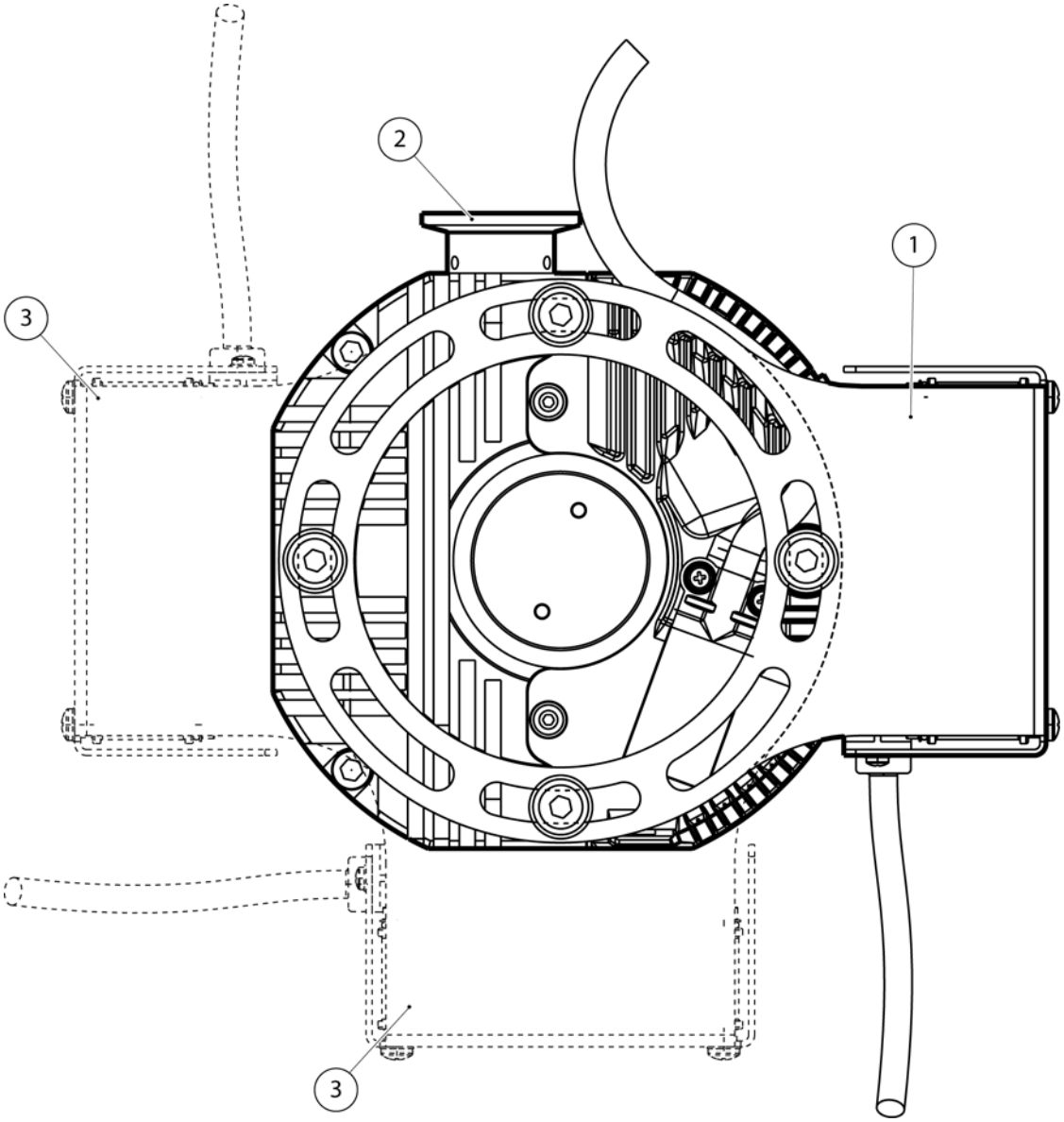

1. ACX nEXT Air cooler (recommended)
2. Pump outlet port
3. Alternative mounting position

© Edwards Limited 2018. All rights reserved.
Edwards and the Edwards logo are trademarks of Edwards Limited.

3.3.3 Axial mounting



WARNING

Before you install the accessory, ensure that you switch off and isolate the pump.



WARNING

The axial air cooler does not have an internal guard and MUST NOT operate unless attached to the pump.

Refer to Figure 7.

1. Switch off pump; wait until the pump has stopped rotating. Isolate the pump drive from the electrical supply.
2. Remove the rubber mounting feet from the base of the pump.
3. Using the M8 x 12 mm button head screws supplied, fit the ACX axial air cooler to the base of the pump as shown in Figure 1. Ensure the fixing screws are secure.

3.3.4 Combined radial and axial mounting

Refer to Figure 7.

Maximum pump cooling can be obtained with the simultaneous use of radial and axial cooling fans. The fan arrangements can be fitted as shown in Figure 1.

1. Switch off pump; wait until the pump has stopped rotating. Isolate the pump drive from the electrical supply.
2. Remove the rubber mounting feet from the base of the pump.
3. Using the M8 x 12 mm button head screws supplied, fit the radial and axial air coolers to the base of the pump as shown in Figure 1.

© Edwards Limited 2018. All rights reserved.
Edwards and the Edwards logo are trademarks of Edwards Limited.

Figure 7 - ACX nEXT radial and axial air cooler installation

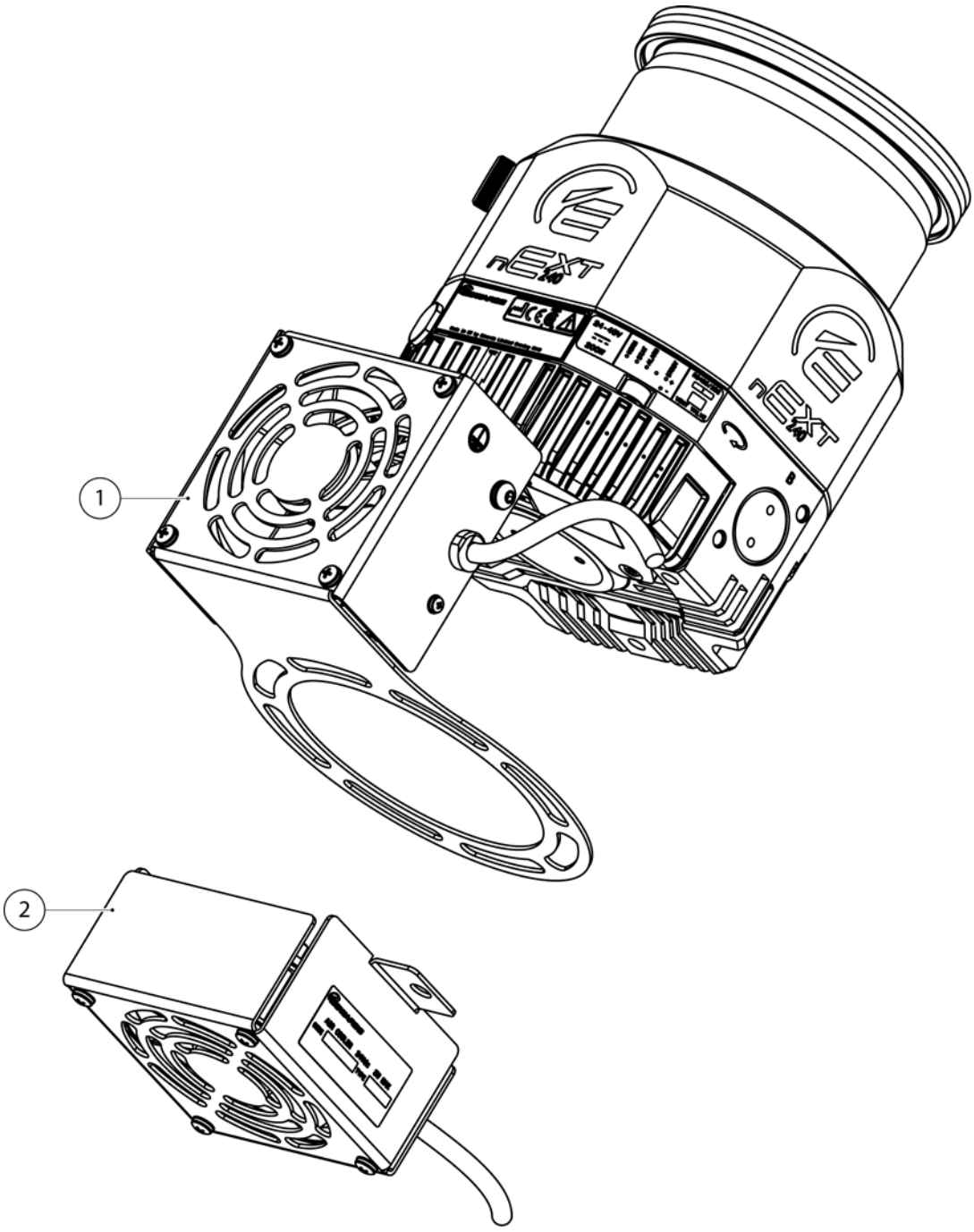

1. Radial air-cooler
2. Axial air-cooler

© Edwards Limited 2018. All rights reserved.
Edwards and the Edwards logo are trademarks of Edwards Limited.

3.4 Electrical connection

CAUTION

Ensure that the electrical supply is correct. If it is not, you can damage the ACX air cooler.

CAUTION

Ensure that the power supply to the cooling accessory can be isolated in a fault condition if required.

The ACX air cooler requires a 24 V d.c. electrical supply. You can connect the ACX air cooler to a TIC (Turbo Instrument Controller), a suitable electrical supply or via the nEXT drive electronics.

With the air cooler powered via the nEXT drive electronics, the turbo pump will operate satisfactorily with any of the supply voltages specified in the pump product manual.

Note: *Note:For combined use of both the axial and radial ACX air coolers, a TIC can be used to supply power to one air cooler only. A separate 24 V power supply is required to power the second air cooler.*

It is recommended that you fit a separate earth (ground) conductor to the earth of the air cooler; use an un-insulated braid or a separate insulated green/yellow connector and use the M5 x 10 screw and shake-proof washer supplied (attached to the fan cowling) to secure the earth conductor to the air-cooler.

3.4.1 Power supply requirements

Table 7 - ACX nEXT air cooler power requirements

Part number	Description	Operation
B58053170	ACX nEXT RADIAL KIT 24 V WIRED	Powered via the nEXT drive electronics. See Section 3.2
B58053173	ACX nEXT RADIAL KIT 24 V D/WIRED SPECIAL	Powered via the nEXT drive electronics. See Section 3.2
B58053175	ACX nEXT RADIAL KIT 24 V STD	Powered via the TIC or any suitable electrical power supply
B58053180	ACX nEXT AXIAL KIT 24 V WIRED	Powered via the nEXT drive electronics. See Section 3.2.
B58053185	ACX nEXT AXIAL KIT 24 V STD	Powered via the TIC or any suitable electrical power supply

3.4.1.1 Connector socket

The nEXT turbo pump drive has a 3-way connector socket on the side of the pump as circled in Figure 8. When you receive the pump, this connector may be concealed by a black protective cover. If you intend to use the connector, this cover should be removed by levering with a small screwdriver. A mating plug for this connector is supplied with the pump and the following fan assemblies are available which has a mating plug pre-wired:

- B58053170 ACX nEXT RADIAL KIT 24 V WIRED
- B58053180 ACX nEXT AXIAL KIT 24 V WIRED

© Edwards Limited 2018. All rights reserved.
Edwards and the Edwards logo are trademarks of Edwards Limited.

Figure 8 - nEXT connector plug and socket

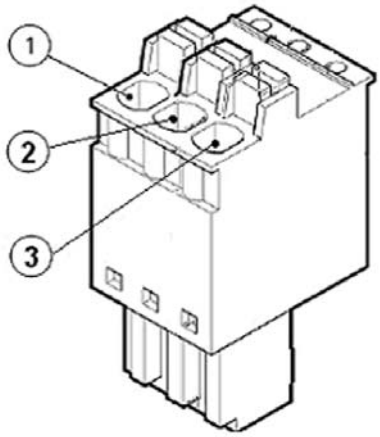

1. 24 V d.c. Out
2. Chassis
3. 24 V d.c. Rtn

3.5 Operation

WARNING

There is no guard on the outlet of the axial air cooler. Therefore, you must not operate the air cooler unless it is installed on the pump.

When operating the ACX air cooler, do not obstruct the fan inlet and ensure there is an adequate supply of cooling air. During operation, if the temperature of any surface of the pump is higher than 60 ºC the pump is too hot and you must increase the cooling.

© Edwards Limited 2018. All rights reserved.
Edwards and the Edwards logo are trademarks of Edwards Limited.

4 nEXT85 Air Cooler

4.1 Description

The nEXT85 air coolers is an enclosed 24 V d.c. motor electric fan and a fixing bracket assembly which can be easily fitted to the nEXT85 pump via bolt holes in the base of the pump.

The nEXT85 air coolers are available for both radial and axial mounting. It is possible to use both variants simultaneously if so desired and space allows by using a cable adaptor, see Section 12.

The air coolers are available with a pre-wired connector which connects directly to auxiliary port on the controller or with a bare wire. The air coolers are pre-wired to use auxiliary output 2 and the default is set to always on (option 8).

4.2 Technical data

Table 8 - nEXT85 air cooler kits

Air Cooler	Item Number
nEXT85 Air cooler kit - wired	B8G200820
nEXT85 Air cooler kit - bare wire	B8G200821

Table 9 - nEXT85 air cooler technical data

Electrical supply	15 to 27.6 V d.c.
Power consumption	3.6 Watts
Noise emissions	42 dBA (per fan)

4.3 Installation

4.3.1 Unpack and inspect

Remove all packing and materials and protective covers and check the nEXT85 air cooler.

If the nEXT85 air cooler is damaged, notify your supplier and the carrier in writing within three days; state the Item Number of the nEXT85 air cooler together with your order number and your supplier's invoice number. Retain all packing materials for inspection. Do not use the nEXT85 air cooler if it is damaged.

4.4 Side (or radial) mounting

WARNING



Before installing the accessory, ensure that the pump is switched off and isolated.

Refer to Figure 3.

Switch off the pump and wait until the pump has stopped rotating. Isolate the pump drive from the electrical supply.

Remove the rubber mounting feet from the base of the pump.

Fit the nEXT85 radial air cooler mounting bracket to the air cooler as shown on Figure 3 using 2 off M5 x 10 mm button head screws supplied.

© Edwards Limited 2018. All rights reserved.
Edwards and the Edwards logo are trademarks of Edwards Limited.

Fit the radial air cooler assembly to the base of the pump as shown on Figure 3 using 4 off M5 x 10 mm button head screws supplied. Ensure the fixing screws are secure. To ensure the radial air cooler works most effectively it is recommended that the fan should be placed directly opposite the pump drive, as shown in Figure 3. This ensures adequate cooling of the nEXT drive. Alternative mounting positions are available.

4.4.1 Axial mounting

Refer to Figure 3.

Switch off the pump; wait until the pump has stopped rotating. Isolate the pump drive from the electrical supply.

Remove the rubber mounting feet from the base of the pump.

Fit the nEXT85 axial air cooler mounting bracket to the base of the pump as shown on Figure 3 using 2 off M5 x 10 mm button head screws supplied.

Fit the radial air cooler to the axial air cooler mounting bracket as shown on Figure 3 using 2 off M5 x 10 mm button head screws supplied. Ensure the fixing screws are secure.

4.4.2 Combined radial and axial mounting

Refer to Figure 3.

Maximum pump cooling can be obtained with the simultaneous use of radial and axial cooling fans. An example of fan arrangements is shown in Figure 3.

Switch off the pump; wait until the pump has stopped rotating. Isolate the pump drive from the electrical supply.

Remove the rubber mounting feet from the base of the pump.

Using the M5 x 10 mm button head screws supplied, fit the radial and axial air coolers to the base of the pump as shown in Figure 3 and described in Section 3.3.2 and Section 3.3.3. It is recommended that the radial fan is fitted before the axial fan.

Connect the auxiliary 'Y'- cable adaptor (**see Auxiliary Connectors**) to the auxiliary connector on the nEXT85 controller, see Figure 4.

Connect the radial air cooler to one of the two female socket ends and connect the axial fan to the other female socket end.

4.5 Electrical connection

CAUTION

Ensure that the electrical supply is correct. If it is not, damage may occur to the nEXT85 air cooler.

CAUTION

Ensure that the power supply to the cooling accessory can be isolated in a fault condition if required.

The air coolers are supplied with a pre-wired connector which connects directly to the auxiliary connector Figure 4 on the controller or with a bare wire. The pre-wired air coolers use auxiliary output 2 and the default setting is set to always on (option 8).

With the air cooler powered via the nEXT drive electronics, the turbo pump will operate satisfactorily with any of the supply voltages specified in the pump product manual.

Bare wired air coolers require a 24 V d.c. electrical supply. The air cooler can be connected to a TIC (Turbo Instrument Controller) or a suitable electrical supply.

© Edwards Limited 2018. All rights reserved.
Edwards and the Edwards logo are trademarks of Edwards Limited.

It is recommended that a separate earth (ground) conductor is fitted to the earth of the air cooler; use an uninsulated braid or a separate insulated green/yellow connector and use the M5 x 10 screw and shake-proof washer supplied (attached to the fan cowling) to secure the earth conductor to the air cooler.

4.5.1 Power supply requirements

Table 10 - nEXT85 air cooler power requirements

Description	Operation
nEXT85 air cooler	Powered via the nEXT drive electronics (see Table 9)

4.6 Operation

When operating the air cooler, do not obstruct the fan inlet and ensure there is an adequate supply of cooling air. During operation, if the temperature of any surface of the pump is higher than 65 °C the pump is too hot and the cooling must be increased.

© Edwards Limited 2018. All rights reserved.
Edwards and the Edwards logo are trademarks of Edwards Limited.

This page has been intentionally left blank.

© Edwards Limited 2018. All rights reserved.
Edwards and the Edwards logo are trademarks of Edwards Limited.

5 TAV vent-valve

5.1 Description

To maintain cleanliness of your vacuum system, we recommend that you vent the pump or vacuum system whenever you switch the pump off.

The TAV vent-valves are 24 V d.c. electrical-solenoid operated valves which you can use to vent your vacuum system with atmospheric air or dry nitrogen when you switch the nEXT pump off.

The TAV vent-valve is normally open when the solenoid is de-energised. In the case of a power failure, the vacuum system and pump will vent and the pump will slowly come to a halt.

Refer to Figure 11. The TAV vent-valve is supplied with a sintered bronze inlet filter (1), a riffled hose connector (7) and 3 metres of cable.

You can connect your dry nitrogen supply to the hose connector.

An NW10 adaptor (Figure 11, item 3) is also supplied to convert the 1/8 inch BSP outlet connector (Figure 9, item 2) of the TAV vent-valve for direct connection to your vacuum system.

The TAV vent-valve can be powered by the nEXT drive electronics, controlled from a TIC controller, or from any suitable electrical supply.

CAUTION

Correct venting is essential to prevent suck-back of hydrocarbon vapour present in the backing line - especially when using oil-sealed rotary vane pumps. To prevent suck-back when stopping the nEXT pump, always begin the venting sequence before the nEXT pump has slowed to 50% of normal rotational speed. Always introduce venting gas to the venting port or to the high vacuum inlet. Never vent to the backing line.

5.2 nEXT85 TAV5 vent-valve

There are two 24 V d.c. TAV5 solenoid-operated vent-valve options available for the nEXT85 pump for system venting; these are either 'normally open (N/O)' or 'normally closed (N/C)'.

Both valves are available with either a wired connector which connects directly to the auxiliary port on the controller or as a bare wire option.

All vent-valves have a 0.5 mm diameter orifice and are suitable for venting small vacuum systems of < 5 litres.

The vent-valves are pre-wired to Vent Option 1 and that the default is set to fully vent at 50% (option 0).The solenoid valve is fitted in place of the manual valve, or alternatively can be fitted with an adaptor (supplied with the valve) and be used with any suitable NW10 flanged port on your vacuum system. The vent port adaptor allows the vent port or the purge port to be used with any suitable NW10 fitting. Refer to Table 11.

If the valve type is set to normally closed, and either vent options 14 or 15 are used, the controller will ensure that the TAV solenoid valve will only ever 'open' upon receipt of a stop command. Therefore there is no need to send the delayed start command.

Table 11 - TAV vent-valve and vent port adaptor

Product	Item Number
nEXT85 TAV5 kit N/C connector fitted (0.3 m)	B8G200835
nEXT85 TAV5 kit N/C bare wire (3 m)	B58066040
nEXT85 TAV5 kit N/O connector fitted (0.3 m)	B8G200834
nEXT85 TAV5 kit N/O bare wire (3 m)	B58066010

© Edwards Limited 2018. All rights reserved.
Edwards and the Edwards logo are trademarks of Edwards Limited.

5.3 Technical data

Table 12 - TAV vent-valve technical data

	TAV5	TAV6
Maximum inlet pressure	1 bar gauge, 2 x 10^5 Pa	1 bar gauge, 2 x 10^5 Pa
Orifice diameter	0.5 mm	1.0 mm
Helium leak rate (valve closed)	< 1 x 10^{-8} mbar l s^{-1} < 1 x 10^{-6} Pa l s^{-1}	< 1 x 10^{-6} mbar l s^{-1} < 1 x 10^{-4} Pa l s^{-1}
Valve inlet-filter	Sintered bronze	Sintered bronze
Hose connector	Riffled nozzle for 4 mm bore tube	Riffled nozzle for 4 mm bore tube
Dimensions	See Figure 9	See Figure 9
Mass	0.08 kg	0.08 kg
Item Numbers	B580-66-010	B580-66-020
Configuration	Normally open	
Pollution degree	EN61010 Part 1, Category 2	
Equipment type	Fixed equipment for indoor use only	
Nominal electrical supply voltage	24 V d.c.	
Electrical supply voltage range	15 to 24 V d.c.	
Pull-in voltage	14 V d.c.	
Drop-out voltage	10 V d.c.	
Power consumption	1.8 W	
Cable type and length	2-core screened, unterminated, 3 m long	
Cable cores	Red (positive), black (negative)	
Valve electrical connector type	2 pole and earth (ground), miniature DIN	
Vale inlet-connection	M5 female	
Valve outlet-connection	1/8 inch BSP	

Table 13 - nEXT85 TAV5 vent-valve technical data

	nEXT85 TAV5 vent-valve
Maximum inlet pressure	1 bar gauge, 2 x 105 Pa
Orifice diameter	0.5 mm
Helium leak rate (valve closed)	< 1 x 10^{-8} mbar 1 s^{-1} < 1 x 10^{-6} Pa l s^{-1}
Valve inlet filter	Sintered bronze
Hose connector	Riffled nozzle for 4 mm bore tube
Dimensions	See Figure 9
Mass	0.08 kg
Configuration	Normally open or Normally closed
Pollution degree	EN61010 Part 1, Category 2
Equipment type	Fixed equipment for indoor use only
Nominal electrical supply voltage	24 V d.c.
Electrical supply voltage range	15 to 26.4 V d.c.
Pull-in voltage	14 V d.c.

© Edwards Limited 2018. All rights reserved.
Edwards and the Edwards logo are trademarks of Edwards Limited.

Table 13 - nEXT85 TAV5 vent-valve technical data (continued)

	nEXT85 TAV5 vent-valve
Drop-out voltage	10 V d.c.
Power consumption	1.8 W
Valve inlet connection	M5 female
Valve outlet connection	1/8 inch BSP
Cable type and length (for bare wired option)	2-core screened, unterminated, 3 m long
Cable cores	Red (positive), black (negative)
Valve electrical connector type	2 pole and earth (ground), miniature DIN

Figure 9 - TAV vent-valve dimensions (mm)

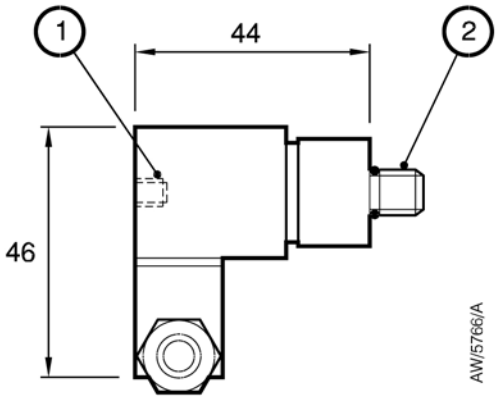

1. M5 female thread
2. 1/8 inch BSP male thread

© Edwards Limited 2018. All rights reserved.
Edwards and the Edwards logo are trademarks of Edwards Limited.

5.4 Installation

5.4.1 Unpack and inspect

Remove all packing materials and protective covers and check the TAV vent-valve.

If the TAV vent-valve is damaged, notify your supplier and the carrier in writing within three days; state the Item Number of the TAV vent-valve together with your order number and your supplier's invoice number. Retain all packing materials for inspection. Do not use the TAV vent-valve if it is damaged.

5.4.2 Fit the TAV vent-valve to the pump

WARNING

Before you install the accessory, ensure that you switch off the pump and disconnect the power supply as described below.

CAUTION

When fitting the TAV vent-valve, apply torque to the steel body only. On no account should torque be applied to the solenoid body, failure to do so could damage the valve which may cause it to leak.

Figure 10 - Fitting the TAV vent-valve

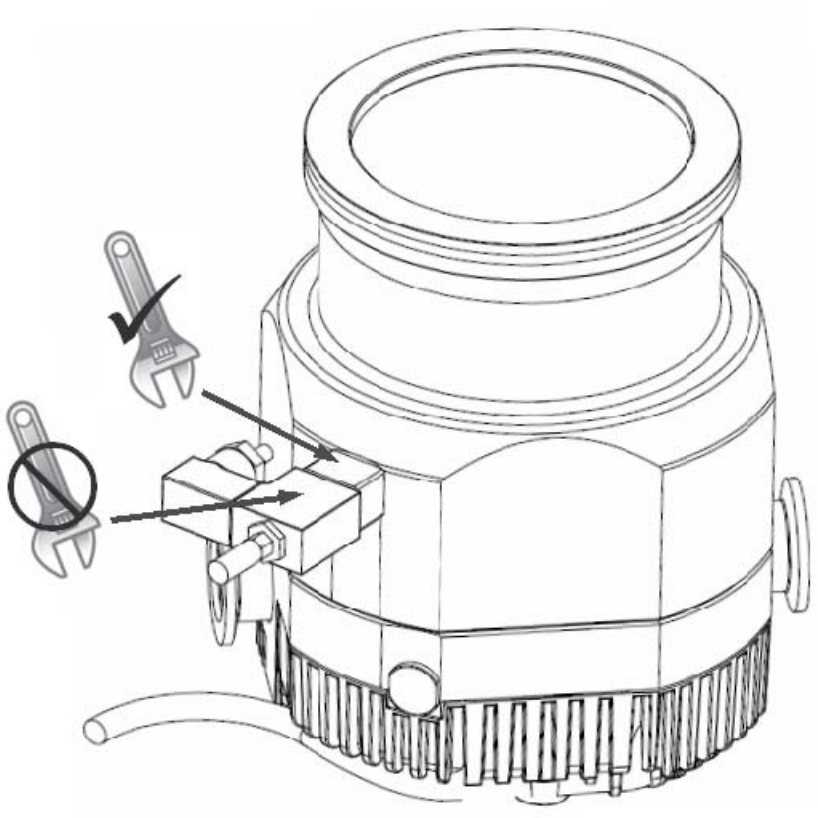

© Edwards Limited 2018. All rights reserved.
Edwards and the Edwards logo are trademarks of Edwards Limited.

Refer to Figure 1.

1. Switch off the pump, isolate the pump controller from the electrical supply, and wait until the pump has stopped running.
2. If your nEXT pump has a manual vent-valve, unscrew and remove it, then continue at step 4.
3. If your nEXT pump does not have a manual vent-valve, fit the vent-valve adaptor to a suitable NW10 flange on your pump or vacuum system.
4. Check that the TAV vent O-ring (Figure 11, item 4) is fitted and screw the TAV vent-valve into the vent-valve adaptor or into the 1/8 inch BSP hole vacated by the manual vent-valve.
5. Connect your dry nitrogen or other inert gas supply pipeline to the M5 inlet (Figure 11, item 2) or use the riffled hose connector (Figure 11, item 7) supplied.
6. If you vent the pump with air, fir the sintered bronze inlet-filter (Figure 11, item 1) to protect your system against the entry of dust.

5.4.3 Electrical connection

CAUTION

Ensure that the electrical supply is correct. If it is not, you can damage the TAV vent-valve.

The TAV vent-valve requires a 24 V d.c. electrical supply.

The nEXT pump includes drive electronics which provide facilities for regulated pulsed venting (see pump manual for details). This ensures that your vacuum system can be vented to atmosphere as rapidly as possible without damage to the pump.

Alternatively, you can connect the TAV vent-valve to a TIC (see TIC instruction manual for details) or your own electrical supply.

© Edwards Limited 2018. All rights reserved.
Edwards and the Edwards logo are trademarks of Edwards Limited.

5.5 Operation

CAUTION

If you manually vent the pump when it is at full rotational speed and the rate of pressure rise is too high, the pump life may be reduced. When using the manual vent-valve supplied, we recommend that you either limit the vent or only open the vent-valve after the nEXT pump speed has fallen to 50% of full rotational speed. Do not vent the backing line as this may lead to contamination. If you vent into your vacuum system and use an oil sealed rotary backing pump, select a point upstream of the nEXT pump, to prevent oil back-streaming from the backing line.

Operation of the TAV vent-valve depends on how you have conneted it:

- If you have connected the TAV vent-valve to the drive electronics of the nEXT pump; refer to the nEXT pump instruction manual.
- If you have connected the TAV vent-valve to a TIC: refer to the TIC instruction manual for operating instructions.
- If you have connected the TAV vent-valve to your own electrical supply, switch on the electrical supply to operate the vent-valve.

Figure 11 - TAV vent-valve connections

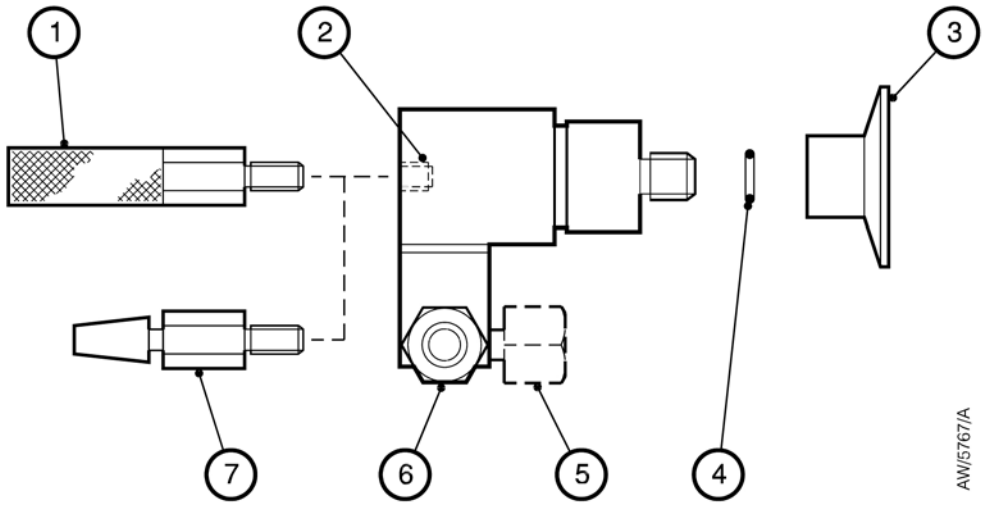

1. Air filter
2. Inlet-port
3. Vent-valve adaptor
4. O-ring
5. Alternative electrical supply connector position
6. Electrical supply connector
7. Hose connector

© Edwards Limited 2018. All rights reserved.
Edwards and the Edwards logo are trademarks of Edwards Limited.

6 Inlet-screens

6.1 Description

Inlet-screens are supplied with all new nEXT pumps. If you have a nEXT pump without an inlet-screen, we recommend that you fit an inlet-screen for additional safety. The only exception to this is the main port in the END faces of split flow pumps. Plastic covers must be retained on these variants until ready to install to minimise the risk of injury from impeller blades.

The inlet-screen prevents the entry of debris into the pump and also prevents people from coming into contact with the blades if the pump is switched on when it is disconnected from your vacuum system.

6.2 Technical data

Note: *Refer to the pump instruction manual for details of performance reductions when an inlet-screen is fitted.*

Table 14 - Inlet-screens technical data

Pump inlet flange size	Pump model	Item number
NW40 inlet-screen	nEXT85	C105-16-085
ISO63 coarse inlet-screen	nEXT85	B8G2-00-808
ISO63 fine inlet-screen	nEXT85	B8G2-00-809
ISO100 coarse inlet-screen	nEXT240 / 300	B810-00-808
ISO100 fine inlet-screen	nEXT240 / 300	B810-00-809
ISO160 coarse inlet-screen	nEXT400	B800-00-825
ISO160 fine inlet-screen	nEXT400	B800-00-826
CF63 fine inlet-screen	nEXT85	B722-40-860
CF100 coarse inlet-screen	nEXT240 / 300	B800-00-821
CF100 fine inlet-screen	nEXT240 / 300	B800-00-822
CF160 coarse inlet-screen	nEXT400	B800-00-823
CF160 fine inlet-screen	nEXT400	B800-00-824

6.3 Installation

6.3.1 Unpack and inspect

Remove all packing materials and protective covers and check the inlet-screen.

If the inlet-screen is damaged, notify your supplier and the carrier in writing within three days; state the Item Number of the inlet-screen together with your order number and your supplier's invoice number. Retain all packing materials for inspection. Do not use the inlet-screen if it is damaged.

© Edwards Limited 2018. All rights reserved.
Edwards and the Edwards logo are trademarks of Edwards Limited.

6.3.2 Fit or remove the inlet-screen

WARNING

Before you install the accessory, ensure that you switch off the pump and disconnect the power supply as described below.

WARNING

If you remove the inlet-screen, there will be a risk of injury from exposed sharp edges in the pump.

CAUTION

Do not remove the inlet-screen unless you can be sure that debris cannot fall into the pump. Debris which falls into the pump can seriously damage it.

1. Switch off the pump, isolate the pump controller from the electrical supply, and wait until the pump has stopped rotating.
2. Use the following appropriate procedure according to the type of inlet-screen.

6.3.2.1 Integral mesh centring ring inlet-screen

Refer to Figure 12.

- Locate the inlet-screen between the nEXT pump flange and the mating flange on your vacuum system chamber.

Figure 12 - Integral mesh centring ring inlet-screen

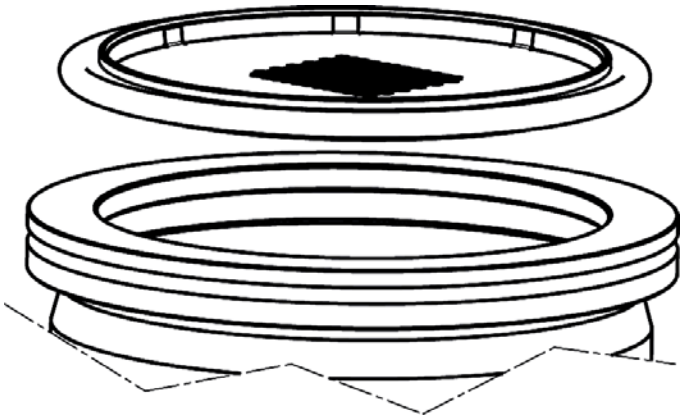

© Edwards Limited 2018. All rights reserved.
Edwards and the Edwards logo are trademarks of Edwards Limited.

6.3.2.2 Mesh inlet-screen

Refer to Figure 13.

- Insert the mesh inlet-screen into the pump inlet as shown in Figure 13.

Figure 13 - Mesh inlet-screen

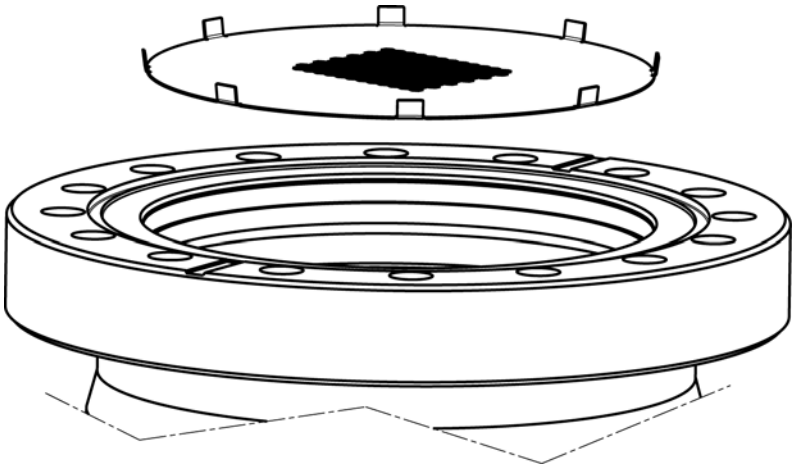

© Edwards Limited 2018. All rights reserved.
Edwards and the Edwards logo are trademarks of Edwards Limited.

This page has been intentionally left blank.

© Edwards Limited 2018. All rights reserved.
Edwards and the Edwards logo are trademarks of Edwards Limited.

7 PRX10 purge-restrictor

7.1 Description

The PRX10 purge-restrictor (shown in Figure 14) sets the purge gas flow rate.

The nEXT pump range has a purge port facility to allow you to purge the motor and bearing cavity with dry nitrogen or other inert gas.

Note: *You will need a vent port adaptor (see Section 8) to fit the PRX10 purge-restrictor.*

7.2 Technical data

Table 15 - PRX10 purge-restrictor technical data

Nominal nitrogen flow rate*	255 sccm, 0.42 mbar l s^{-1}, 42 Pa l s^{-1}
Flange size	NW10
Item Number	B580-65-001

* *At a supply pressure of 0 bar gauge (1 x 10^5 Pa)*

7.3 Installation

7.3.1 Unpack and inspect

Remove all packing materials and protective covers and check the PRX10 purge-restrictor.

If the PRX10 purge-restrictor is damaged, notify your supplier and the carrier in writing within three days; state the Item Number of the PRX10 purge-restrictor together with your order number and your supplier's invoice number. Retain all packing materials for inspection. Do not use the PRX10 purge-restrictor if it is damaged.

7.3.2 Fit the purge-restrictor

WARNING



Before you install the accessory, ensure that you switch off the pump and disconnect the power supply as described below.

CAUTION

Do not exert any sideways force on the purge- restrictor when you clamp it into place. If you do, you can damage the seal between the O-ring (Figure 14, item 2) and the body of the purge-restrictor. If the seal is damaged, gas may leak through the seal and you will not be able to properly control gas flow into the pump.

Note: *If you will use a purge gas other than nitrogen, you must calibrate the purge-restrictor (refer to Section 7.4.2) before you connect your purge gas supply.*

1. Switch off the pump, isolate the pump controller from the electrical supply, and wait for the pump to stop rotating.
2. Remove the blank and clamp from the purge-port on the pump.

© Edwards Limited 2018. All rights reserved.
Edwards and the Edwards logo are trademarks of Edwards Limited.

3. Attach your purge gas supply pipeline (which must be terminated with an NW10 flange) to the purge-port with the PRX10 purge-restrictor in place of the normal NW10 centring-ring.
4. Carefully secure the connection with the NW10 clamp.

7.4 Operation

7.4.1 General

The PRX10 purge-restrictor, as supplied, is adjusted to restrict the flow rate of dry nitrogen at a supply pressure of 0 bar gauge (1 x 10^5 Pa) to 25 sccm (0.42 mbar l s^{-1}, 42 Pa l s^{-1}). You can increase the supply pressure to increase the flow rate; see Table 16.

For most applications, you can use a nitrogen flow rate of 25 sccm (0.42 mbar l s^{-1}, 42 Pa l s^{-1}) to 30 sccm (0.5 mbar l s^{-1}, 50 Pa l s^{-1}). To do this, your nitrogen supply pressure must be 0.1 to 0.2 bar gauge (1.1 x 10^5 to 1.2 x 10^5 Pa). Do not exceed the maximum purge gas supply pressure given in the instruction manual supplied with your pump.

7.4.2 Calibration of the PRX10 purge-restrictor for different purge gases

The purge gas flow rate at a particular supply pressure will change if you use a different purge gas.

If you want to use a different purge gas, use the procedure below to adjust the flow rate.

1. Fit the PRX10 purge-restrictor to the pump as described in Section 7.3.2. Fit a calibrated mass flow meter between your purge gas supply and the PRX10 purge-restrictor.
2. Switch on the backing pump to evacuate the nEXT pump and then turn on your purge gas supply.
3. Monitor the indicated purge gas flow rate while you adjust the purge gas supply pressure. If you can achieve the required flow rate, you do not need to adjust the purge-restrictor; in this case, continue at Step 5 below.
4. Refer to Figure 14. If you cannot achieve the required flow rate, undo the locknut (3) on the purge-restrictor and use a small screwdriver to turn the adjustment screw (4) clockwise to decrease the flow rate, or anticlockwise to increase the flow rate. Tighten the locknut.
5. Turn off your purge gas supply, remove the mass flow meter and connect your purge gas supply to the purge-restrictor.

Table 16 - Nitrogen flow rate through the PRX10 purge-restrictor

Nitrogen supply pressure			Nitrogen flow rate		
bar gauge	bar absolute	Pa	sccm	mbar l s^{-1}	Pa l s^{-1}
0.0	1.0	1.0 x 10^5	25	0.42	42
0.5	1.5	1.5 x 10^5	38	0.63	63
1.0	2.0	2.0 x 10^5	50	0.83	83
1.5	2.5	2.5 x 10^5	63	1	100
2.0	3.0	3.0 x 10^5	75	1.25	125
2.3	3.5	3.5 x 10^5	88	1.5	150
3.0	4.0	4.0 x 10^5	100	1.7	170

© Edwards Limited 2018. All rights reserved.
Edwards and the Edwards logo are trademarks of Edwards Limited.

Figure 14 - PRX10 purge-restrictor

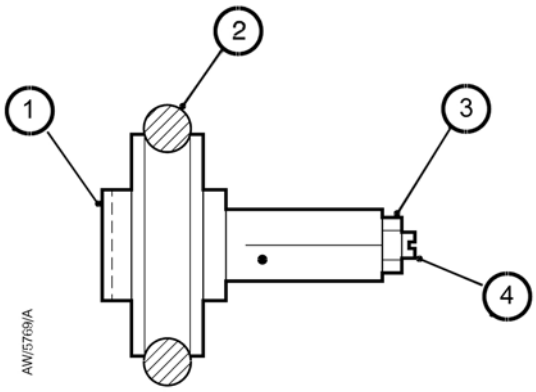

1. Filtered purge gas inlet to PRX10 purge-restrictor
2. O-ring
3. Locknut
4. Adjustment screw

© Edwards Limited 2018. All rights reserved.
Edwards and the Edwards logo are trademarks of Edwards Limited.

This page has been intentionally left blank.

© Edwards Limited 2018. All rights reserved.
Edwards and the Edwards logo are trademarks of Edwards Limited.

8 Vent-port adaptor

8.1 Description

The 1/8 inch BSP(P) male to NW10 vent-port adaptor can be used to convert the 1/8 inch BSP(P) female vent-port on all nEXT pumps to an NW10 flange. An alternative vent-valve to the TAV 5/6 or a vent pipeline may then be fitted to this flange. See Figure 15.

Figure 15 - Vent-port adaptor

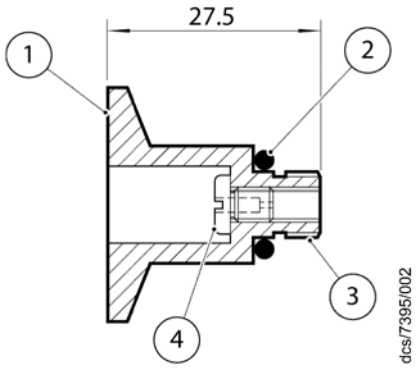

1. NW10 flange
2. O-ring
3. 1/8 inch BSP male thread
4. Removable flow-restrictor

The vent-port adaptor is supplied with a removable flow restrictor and an O-ring to seal the adaptor to the pump. It is suited for all nEXT pump types.

Also available is an extended vent-port adaptor which is intended for use with the split-flow turbo pumps where the backing port is too close to the vent-port to allow the standard vent-port adaptor to be used. The extended vent-port adaptor is supplied with an O-ring to seal to the pump, NW10 centering ring and NW10/16 clamping ring. Refer to Figure 16.

Figure 16 - Extended vent-port adaptor

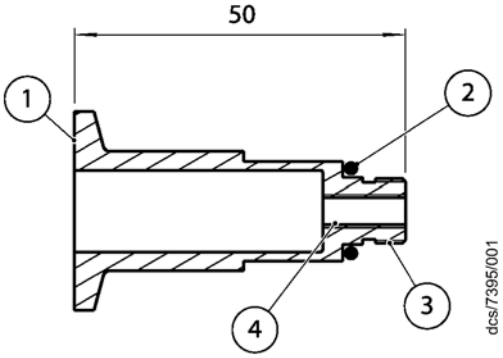

1. NW10 flange
2. O-ring
3. 1/8 inch BSP male thread
4. M5 internal thread

CAUTION

The extended vent-port adaptor is not supplied with a removable flow restrictor. Venting a turbo pump from atmosphere, through the extended vent-port adaptor, would cause damage to the turbo pump. To vent a turbo pump when using the extended vent-port adaptor, you must either control the flow-rate to the adaptor or incorporate a 0.8 mm orifice in the pipeline used to connect to the extended vent-port adaptor.

© Edwards Limited 2018. All rights reserved.
Edwards and the Edwards logo are trademarks of Edwards Limited.

The extended vent-port adaptor is best suited to the following pump types.

- nEXT240
- nEXT300
- nEXT400

8.2 Technical data

Table 17 - Vent-port adaptor technical data

Internal diameter	0.8 mm
Flange size	NW10
Item number	B580-66-011

Table 18 - Extended vent-port adaptor technical data

Internal diameter	M5 thread
Flange size	NW10
Item Number	B580-66-028

8.3 Installation

8.3.1 Unpack and inspect

Remove all packing materials and protective covers and check the vent-port adaptor.

If the vent-port adaptor is damaged, notify your supplier and the carrier in writing within three days; state the Item Number of the vent-port adaptor together with your order number and your supplier's invoice number. Retain all packing materials for inspection. Do not use the vent-port adaptor if it is damaged.

8.3.2 Connect the vent-port adaptor

WARNING



Before you install the accessory, ensure that you switch off the pump and disconnect the power supply as described below.

1. Switch off the pump, isolate the pump controller from the electrical supply, and wait for the pump to stop rotating.
2. Unscrew and remove the manual vent-valve from the nEXT pump.
3. Refer to Figure 15 and 16. Check that the vent-port adaptor has an O-ring (2) fitted and screw the adaptor into the 1/8 inch BSP vent-port. Tighten the adaptor so that it seals firmly against the face of the vent-port.
4. Connect your vent pipeline to the NW10 flange (1) of the adaptor with suitable fittings.

© Edwards Limited 2018. All rights reserved.
Edwards and the Edwards logo are trademarks of Edwards Limited.

9 VRX vent-restrictor

9.1 Description

Note: *A VRX vent-restrictor can be fitted in any nEXT vent port or purge port.*

Fit a VRX vent-restrictor to your nEXT pump if you will vent the pump when the pump speed is above 50% of full rotational speed. The vent-restrictor restricts the flow-rate of the vent gas into the nEXT pump.

You can fit the VRX vent-restrictor directly to the inlet of a vent-port adaptor, together with a TAV vent-valve (if required). Note that you must fit the vent-restrictor before you fit the TAV vent-valve or vent-port adaptor.

9.2 Technical data

Table 19 - Vent-restrictor technical data

VRX	Orifice diameter	Item Number
VRX10	0.1 mm	B580-66-021
VRX20	0.2 mm	B580-66-022
VRX30	0.3 mm	B580-66-023
VRX50	0.5 mm	B580-66-024
VRX70	0.7 mm	B580-66-025

9.3 Installation

9.3.1 Unpack and inspect

Remove all packing materials and protective covers and check the vent-restrictor. The VRX identification number (Figure 17, item 5) is located on the restrictor base; for example, if you have a VRX20 vent-restrictor, ‘20’ will be shown on the base of the restrictor.

If the vent-restrictor is damaged, notify your supplier and the carrier in writing within three days; state the Item Number of the vent-restrictor together with your order number and your supplier's invoice number. Retain all packing materials for inspection. Do not use the vent-restrictor if it is damaged.

9.3.2 VRX vent-restrictor selection

Make sure that you have the correct vent-restrictor for your pump and vacuum system. Refer to your nEXT pump instruction manual for selection details.

You must not exceed the maximum allowable rate of pressure rise specified in the nEXT pump instruction manual.

9.3.3 Fit the vent-restrictor

WARNING



Before you install the accessory, ensure that you switch off the pump and disconnect the power supply as described below.

Use the following procedure to fit the vent-restrictor to a nEXT pump:

© Edwards Limited 2018. All rights reserved.
Edwards and the Edwards logo are trademarks of Edwards Limited.

1. Switch off the pump, isolate the pump controller from the electrical supply, and wait until the pump has stopped rotating.
2. Remove the vent-valve or plug from the nEXT pump, or disconnect the vacuum connections from the purge port as appropriate.
3. Refer to Figure 17. If a vent-restrictor is already fitted, fit a suitable M3 screw into the M3 taped hole (2) in the restrictor, and then pull the screw to remove the old vent-restrictor.
4. Fit a suitable M3 screw to the new restrictor and push the new restrictor fully into the vent-port or purge port of the nEXT port.
5. Remove the M3 screw and refit the vent-valve or plug, or reconnect the vacuum connections to the purge port.

Figure 17 - VRX vent-restrictor

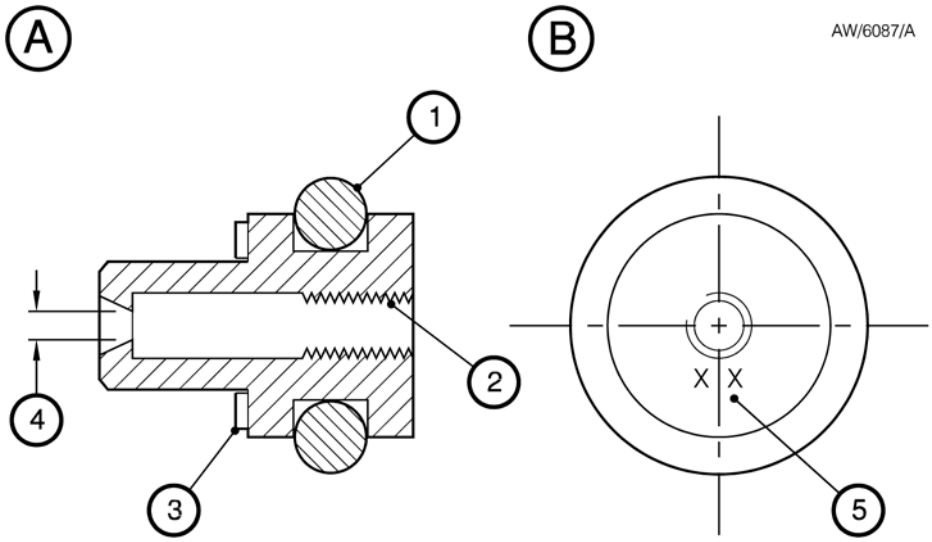

1. O-ring
2. M3 tapped hole
3. Sealing washer
4. Orifice diameter
5. VRX identification number

© Edwards Limited 2018. All rights reserved.
Edwards and the Edwards logo are trademarks of Edwards Limited.

10 nEXT water-cooler

10.1 Description

A WCX water-cooler can be fitted to all nEXT pumps, to provide water cooling during pump operation.

Refer to the pump instruction manual to determine the operating conditions under which you must use water cooling.

10.2 Technical data

Table 20 - nEXT water-cooler technical data

Item number	To fit pumps
B8G200833	nEXT85
B80000815	nEXT240/300/400
Water connection dimensions	Push-fit connectors suitable for 10 mm OD plastic pipe

10.3 Installation

10.3.1 Unpack and inspect

Remove all packing materials and protective covers and check the nEXT water-cooler.

If the water-cooler is damaged, notify your supplier and the carrier in writing within three days; state the Item Number of the water-cooler together with your order number and your supplier's invoice number. Retain all packing materials for inspection. Do not use the water-cooler if it is damaged.

10.3.2 Fit the water-cooler to the pump

WARNING



Before you install the accessory, ensure that you switch off the pump and disconnect the power supply as described below.

1. Switch off the pump. Isolate the pump controller from the electrical supply, and wait until the pump has stopped rotating.
2. Refer to Figure 2 and 18. Fit the water-cooler to the pump as described below.

10.3.2.1 nEXT water-cooler

1. If necessary, remove the old water-cooler from the pump, and retain the fixing screws.
2. Use the screws removed in step 1, or use the two supplied, to secure the new water-cooler to the pump in position as shown in Figure 2.
3. Push the 10 mm OD plastic tube (not supplied) into the push fit connectors ensuring that they are securely inserted.
4. Briefly turn on the cooling water supply and check for leaks. Seal any leaks found.

© Edwards Limited 2018. All rights reserved.
Edwards and the Edwards logo are trademarks of Edwards Limited.

10.4 Operation

CAUTION

Ensure that the cooling-water flow is correct for the pump operating conditions. Insufficient or excess cooling-water flow can damage the pump.

Refer to your nEXT pump instruction manual for:

- The operating conditions under which you must use water-cooling.
- The necessary cooling-water supply flow rates and temperatures.

Figure 18 - nEXT water-cooling

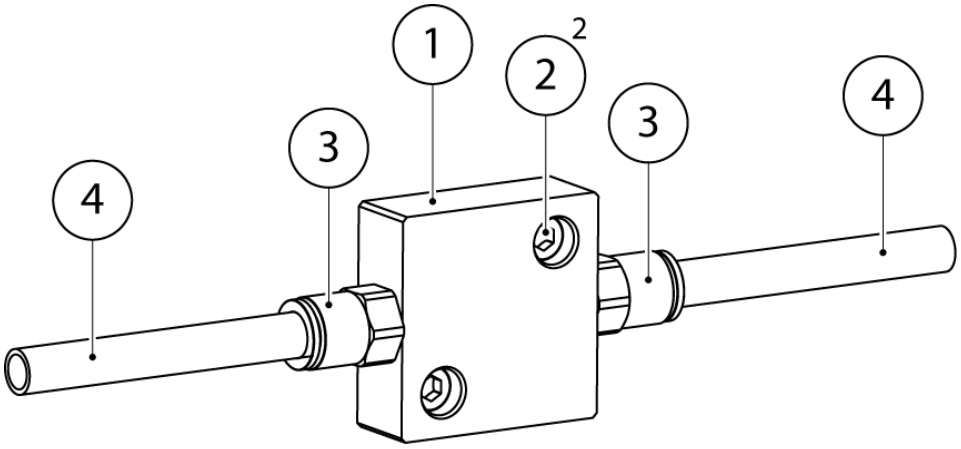

Item number	Product description	Quantity
1	Water-cooling block	1
2	M6 x 16 socket cap screw	2
3	Push fit connector 10 OD pipe 1/4 BSP	2
4	Plastic tube 10 OD	ref only

© Edwards Limited 2018. All rights reserved.
Edwards and the Edwards logo are trademarks of Edwards Limited.

11 nEXT Interface Cable

11.1 Description

The nEXT interface cable allows you to connect the serial link of a nEXT Pump to a PC. Serial commands can then be used to control and monitor the nEXT Pump.

Refer to the pump instruction manual for information on the serial protocol utilisation, including a full serial command set and details of the required message structure.

11.2 Technical data

Table 21 - nEXT interface cable technical data

Item number B800-00-808	To fit pump models All nEXT pumps
Pump connection	15 way female D-type socket (dual-entry back shell)
Supply connection	15 way male D-type plug (single-entry back shell)
PC connection	9 way female D-type socket (single-entry back shell)

11.3 Installation

11.3.1 Unpack and inspect

Remove all packing materials and check the interface cable.

If the interface cable is damaged, notify your supplier and the carrier in writing within three days; state the Item Number of the interface cable together with your order number and your supplier's invoice number. Retain all packing materials for inspection. Do not use the interface cable if it is damaged.

11.3.2 Fit the interface cable to the pump

WARNING



Before you install the accessory, ensure that you switch off the pump and disconnect the power supply as described below.

1. Switch off the pump. Isolate the pump controller from the electrical supply and wait until the pump has stopped rotating.
2. Disconnect the nEXT pump logic interface cable from the TIC Turbo Instrument Controller or TIC Turbo Controller or from your own systems, depending upon your connection method.
3. Refer to Section 16 for the interface cable connection diagram.
4. Connect the 15-way female D-type socket (pump connection) of the interface cable to the nEXT pump logic interface cable.
5. Connect the 15-way male D-type plug (supply connection) of the interface cable either to the back of the TIC (refer to the TIC instruction manual for further information) or to the pump connection of your own system, depending upon your connection method.
6. Connect the 9-way female D-type socket (PC connection) of the interface cable either to the serial port of your PC or to a suitable USB to RS232 converter, depending upon your PC serial port availability.

© Edwards Limited 2018. All rights reserved.
Edwards and the Edwards logo are trademarks of Edwards Limited.

11.4 Operation

WARNING

Ensure that the interface cable is correctly and securely fitted before turning on the power supply and starting the pump, as described in Section 11.3.2.

Refer to your nEXT pump instruction manual for information detailing pump operation and serial protocol utilisation.

Figure 19 - nEXT interface cable

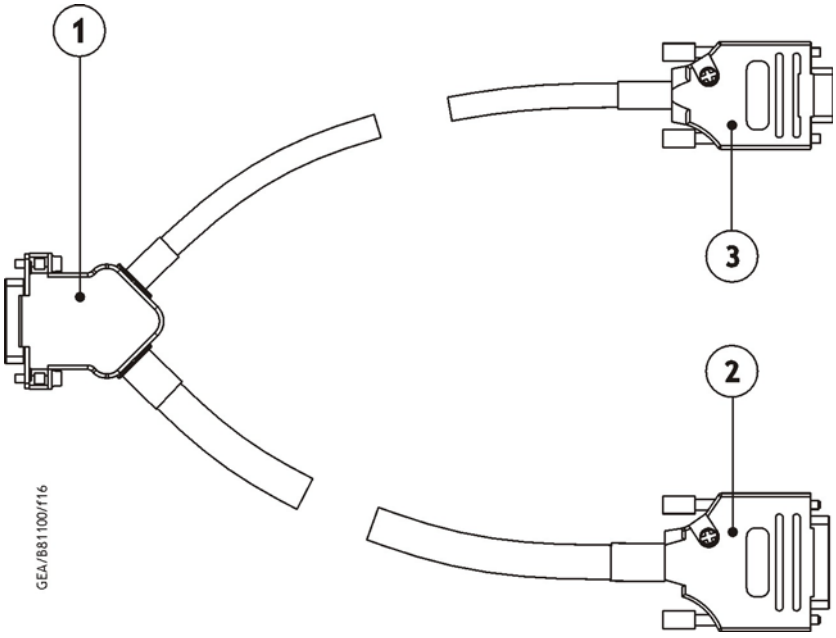

1. Pump connection
2. Supply connection
3. PC connection

© Edwards Limited 2018. All rights reserved.
Edwards and the Edwards logo are trademarks of Edwards Limited.

12 Auxiliary connectors

12.1 Auxiliary connector

Enables the use of accessories that do not come pre-wired with a mating plug. Cable length 1.5 m.

Figure 20 - Auxiliary connector



Table 22 - nEXT85 Auxiliary connector

Item	Part Number
nEXT85 auxiliary connector	B8G200837

To wire an accessory for use on Auxiliary output 1, connect the 0 V of the accessory to pin 1 and the 24 V d.c. to pin 2.

To wire an accessory for use on Auxiliary output 2, connect the 0 V of the accessory to pin 1 and the 24 V d.c. to pin 3.

Pin 4 should always be wired to the chassis of the accessory where available.

Refer to the nEXT85 product manual (B8G000880) for more information on configuring the auxiliary output options and types, including default settings.

Table 23 - nEXT85 auxiliary connector configuration

Pin number	Wire colour	Signal	Polarity
1	Brown	0 V return	Negative
2	White	Aux output 1	Positive
3	Blue	Aux output 2	Positive
4	Black	Chassis	Chassis

12.2 Auxiliary extension cable

The auxiliary extension cable extends the distance of the accessory to the pump. It also benefits from a right angled plug to accommodate installation where space is limited. Cable length 0.2 m.

Figure 21 - Auxiliary extension cable



© Edwards Limited 2018. All rights reserved.
Edwards and the Edwards logo are trademarks of Edwards Limited.

Table 24 - Auxiliary extension cable

Item	Part Number
nEXT85 auxiliary extension cable	B8G200836

12.3 Auxiliary ‘Y’ cable adaptor

The auxiliary 'Y' cable adaptor enables either a TAV5 vent-valve and a cooling fan or two cooling fans or two vent-valves to be operated at the same time.

The two sockets of the Y-cable are wired in parallel so either connector can be used in exactly the same way as the auxiliary connector on the pump itself.

Figure 22 - Auxiliary ‘Y’ cable adaptor



Table 25 - Auxiliary ‘Y’ cable adaptor

Item	Part Number
nEXT85 auxiliary ‘Y’ cable adaptor	B8G200839

© Edwards Limited 2018. All rights reserved.
Edwards and the Edwards logo are trademarks of Edwards Limited.

13 Base mounting adaptor

WARNING



Ensure the pump is securely fixed to the vacuum system through its inlet flange or base using all available mounting points. If the pump were to seize when not securely mounted or restrained, the stored energy of the rotor could cause a rapid movement of the pump, which may cause further damage and injury to personnel.

13.1 Description

A base mounting adaptor is available to enable a nEXT85 turbo pump to be mounted in the same position as an EXT75DX pump.

Description	Item number
nEXT85 base mounting adaptor	B8G200838

13.2 Installation

13.2.1 Unpack and inspect

Remove all packing materials and check the base mounting adaptor.

If the adaptor is damaged, notify your supplier and the carrier in writing immediately, state the item number together with your order number and your suppliers invoice number. Retain all packaging materials for inspection. Do not use the base mounting adaptor if it is damaged.

13.2.2 Fit the base mounting adaptor to the pump

Refer to instruction manual B8G000880 when installing the base mounting adaptor.

The following requirements should be met to ensure the pump remains secure in the event of a total pump seizure:

Table 26 - Requirements for securing the pump in the event of seizure

Fixing screws	4 off M5 ISO898-1 strength class 12.9 (nominal tensile strength 1200 MPa)
Screw engagement length	8 mm
Fastening torque	6 Nm (0.612 kgf.m)

Remove the four rubber feet from the four tapped fixing holes before installing the base mounting adaptor to the pump.

Fit the base mounting adaptor to the base of the nEXT85 using 4 off M5 x 10 bolts strength class 12.9 (not supplied).

Base mount the pump, with the mounting adaptor fitted, in the desired location using 4 off M5 bolts strength class 12.9, in accordance with the requirements of Table 26.

© Edwards Limited 2018. All rights reserved.
Edwards and the Edwards logo are trademarks of Edwards Limited.

This page has been intentionally left blank.

© Edwards Limited 2018. All rights reserved.
Edwards and the Edwards logo are trademarks of Edwards Limited.

14 Maintenance

Edwards nEXT accessories require little user maintenance and contain no user serviceable parts. To maintain the accessories in normal use, do the appropriate checks below when you maintain the pump.

- Check that all mechanical fixings are secure.
- Check that any electrical connections are secure.
- Check that any electrical supply cables are undamaged.

© Edwards Limited 2018. All rights reserved.
Edwards and the Edwards logo are trademarks of Edwards Limited.

This page has been intentionally left blank.

© Edwards Limited 2018. All rights reserved.
Edwards and the Edwards logo are trademarks of Edwards Limited.

Artisan Technology Group is an independent supplier of quality pre-owned equipment

Gold-standard solutions

Extend the life of your critical industrial, commercial, and military systems with our superior service and support.

We buy equipment

Planning to upgrade your current equipment? Have surplus equipment taking up shelf space? We'll give it a new home.

Learn more!

Visit us at **artisantg.com** for more info on price quotes, drivers, technical specifications, manuals, and documentation.

Artisan Scientific Corporation dba Artisan Technology Group is not an affiliate, representative, or authorized distributor for any manufacturer listed herein.

We're here to make your life easier. How can we help you today?

(217) 352-9330 | sales@artisantg.com | artisantg.com

ARTISAN® TECHNOLOGY GROUP