Artisan Technology Group

Artisan Technology Group is your source for quality new and certified-used/pre-owned equipment

- FAST SHIPPING AND DELIVERY
- TENS OF THOUSANDS OF IN-STOCK ITEMS
- EQUIPMENT DEMOS
- HUNDREDS OF MANUFACTURERS SUPPORTED
- LEASING/MONTHLY RENTALS
- ITAR CERTIFIED SECURE ASSET SOLUTIONS

SERVICE CENTER REPAIRS
Experienced engineers and technicians on staff at our full-service, in-house repair center

InstraView℠ REMOTE INSPECTION
Remotely inspect equipment before purchasing with our interactive website at ***www.instraview.com*** ↗

WE BUY USED EQUIPMENT
Sell your excess, underutilized, and idle used equipment
We also offer credit for buy-backs and trade-ins
www.artisantg.com/WeBuyEquipment ↗

LOOKING FOR MORE INFORMATION?
Visit us on the web at ***www.artisantg.com*** ↗ for more information on price quotations, drivers, technical specifications, manuals, and documentation

Contact us: (888) 88-SOURCE | sales@artisantg.com | www.artisantg.com

Reference Titel Seite 1 Donnerstag, 23. November 2006 5:19 17

Eppendorf Reference®

Bedienungsanleitung · Instruction Manual · Mode d'emploi
Instruzioni d'impiego · Manual de Instrucciones

PhysioCare concept
eppendorf

eppendorf

Artisan Technology Group - Quality Instrumentation ... Guaranteed | (888) 88-SOURCE | www.artisantg.com

Inhalt / Contents / Sommaire / Indice / Indice

Teil A / Part A / Section A / Parte A / Parte A

Bedienungsanleitung 5
Instruction Manual 20
Mode d'emploi 35
Instruzioni d'impiego 50
Manual de Instrucciones 65

Part B / Teil B

Maintenance 80
Ordering Information 88

Wartung 96
Bestellinformationen 104

Artisan Technology Group - Quality Instrumentation ... Guaranteed | (888) 88-SOURCE | www.artisantg.com

Reference®

Fig. / Abb. 1

Reference variabel / Reference variable

0.1 – 2.5 µl 10 – 100 µl 20 – 200 µl 100 – 1000 µl 500 – 2500 µl
0.5 – 10 µl
2 – 20 µl

Reference fix

1 – 50 µl 100 µl 200 – 250 µl 500 – 2500 µl

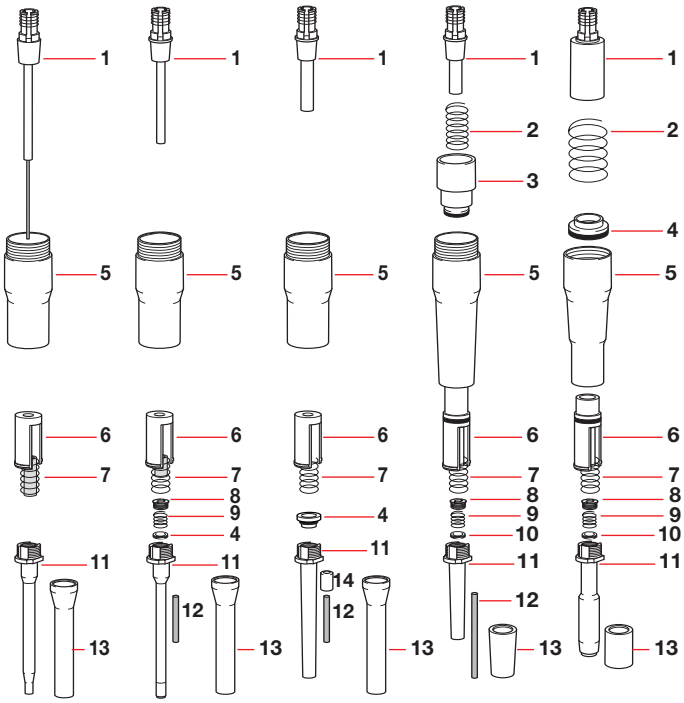

Artisan Technology Group - Quality Instrumentation ... Guaranteed | (888) 88-SOURCE | www.artisantg.com

Artisan Technology Group - Quality Instrumentation ... Guaranteed | (888) 88-SOURCE | www.artisantg.com

Reference® – Part A – Contents

1 Safety precautions and applicational limitations 21
1.1 Handling 21
1.2 Care and maintenance 21
2 Technical data 22
2.1 Reference fix 22
2.2 Reference variable 22
3 Function principle 23
4 Operation 24
4.1 Volume setting 24
4.2 Pipette tips. 24
4.3 Aspirating liquid 24
4.4 Dispensing liquid 25
4.5 Special notes 25
5 Testing / alignment 26
5.1 Testing 26
5.2 Alignment. 26
5.2.1 When should alignment be carried out? 26
5.2.2 Follow-up alignment in the case of error 27
5.2.3 Adjustment for liquids with a density different to that of water 29
6 Care / Sterilization 30
6.1 Care 30
6.2 Sterilization 30
6.3 Decontamination prior to dispatch 31
7 Troubleshooting 32
If there is doubt that dispensing data are correct 34

Artisan Technology Group - Quality Instrumentation ... Guaranteed | (888) 88-SOURCE | www.artisantg.com

1 Safety precautions and applicational limitations

The Reference pipette is a lab device. It may only be operated by appropriately qualified lab personnel.

Before using the Reference pipette, please read the operating manual.
To ensure safe, problem-free service from the Reference pipette, it is essential to observe the following points:

1.1 Handling

- Only use pipettes in the Reference-Serie when a pipette tip has been attached.
- Do not lay down the pipette when a filled pipette tip is attached.
- When using infectious, radioactive, toxic and/or other solutions that pose a health risk, please observe the statutory safety regulations in force in the country in which the pipette is being used.
- When using organic solvents and aggressive chemicals, check the suitability of use with pipette tips (made of PP = polypropylene) and the pipettes.
- When using solutions with physical characteristics which differ to a large extent to those of water (e.g. glycerol), check the dispensing volume as described in Section 5.2.
- Avoid differences in temperature between pipettes and pipette tips as well as the liquid used as this may lead to incorrect volumes being dispensed.
- The above may also occur when liquids with a high vapor pressure are used.

1.2 Care and maintenance

- Do not allow any liquid to enter into the pipette.
- Do **not** clean the pipette with acetone or aggressive solutions.
- Use original spare parts and accessories (pipette tips) only.

Artisan Technology Group - Quality Instrumentation ... Guaranteed | (888) 88-SOURCE | www.artisantg.com

2 Technical data

2.1 Reference fix

Modell / Volumen µl		epT.I.P.S. µl	Systematic measurement deviation (Inaccuracy)	Random measurement deviation (Imprecision; CV)
1	light gray	0.5 – 20	± 2.5 %	≤ 1.8 %
2	light gray	0.5 – 20	± 2.0 %	≤ 1.2 %
5	light gray	0.5 – 20	± 1.5 %	≤ 0.8 %
10	light gray	0.5 – 20	± 1.0 %	≤ 0.5 %
10	yellow	2 – 200	± 1.0 %	≤ 0.5 %
20	yellow	2 – 200	± 0.8 %	≤ 0.3 %
25	yellow	2 – 200	± 0.8 %	≤ 0.3 %
50	yellow	2 – 200	± 0.7 %	≤ 0.3 %
100	yellow	2 – 200	± 0.6 %	≤ 0.2 %
200 – 1000	blue	50 – 1000	± 0.6 %	≤ 0.2 %
1500 – 2500	red	500 – 2500	± 0.6 %	≤ 0.2 %

2.2 Reference variabel

Modell µl		epT.I.P.S. µl	Volumen µl	Systematic measurement deviation (Inaccuracy)	Random measurement deviation (Imprecision; CV)
0.1 – 2.5	dark gray	0.1 – 10	0.25	± 12.0 %	≤ 6.0 %
			1.25	± 2.5 %	≤ 1.5 %
			2.5	± 1.4 %	≤ 0.7 %
0.5 – 10	light gray	0.5 – 20	0.5	± 5.0 %	≤ 2.8 %
			1	± 2.5 %	≤ 1.8 %
			5	± 1.5 %	≤ 0.8 %
			10	± 1.0 %	≤ 0.4 %
2 – 20	light gray	0.5 – 20	2	± 3.0 %	≤ 2.0 %
			10	± 1.0 %	≤ 0.5 %
			20	± 0.8 %	≤ 0.3 %
2 – 20	yellow	2 – 200	2	± 5.0 %	≤ 1.5 %
			10	± 1.2 %	≤ 0.6 %
			20	± 1.0 %	≤ 0.3 %
10 – 100	yellow	2 – 200	10	± 3.0 %	≤ 0.7 %
			50	± 1.0 %	≤ 0.3 %
			100	± 0.8 %	≤ 0.15 %
50 – 200	yellow	2 – 200	50	± 1.0 %	≤ 0.3 %
			100	± 0.9 %	≤ 0.3 %
			200	± 0.6 %	≤ 0.2 %
50 – 250	blue	50 – 1000	50	± 1.4 %	≤ 0.3 %
			100	± 1.1 %	≤ 0.3 %
			250	± 0.6 %	≤ 0.2 %
100 – 1000	blue	50 – 1000	100	± 3.0 %	≤ 0.3 %
			500	± 1.0 %	≤ 0.2 %
			1000	± 0.6 %	≤ 0.2 %
500 – 2500	red	500 – 2500	500	± 1.5 %	≤ 0.3 %
			1000	± 0.8 %	≤ 0.2 %
			2500	± 0.6 %	≤ 0.2 %

Artisan Technology Group - Quality Instrumentation ... Guaranteed | (888) 88-SOURCE | www.artisantg.com

The technical data is only valid when the quoted **eppendorf** pipette tips are used.
Tests carried out in accordance with ISO 8655 for piston-stroke pipettes with an air cushion using a precision balance with evaporation trap approved by the standardization authorities.
Number of determinations:
10; degassed, bidistilled water, 20 °C – 25 °C, constant to ± 0.5 °C; with pre-wetted pipette tip; dispensing carried out on inner wall of vessel. If the place where the pipette is used is at extremely high altitude, an adjustment must be made in line with the ambient air pressure.

3 Function principle

The pipettes in the Reference-Serie are piston-stroke pipettes that operate according to the air-cushion principle.
The Reference-Serie consists of fixed-volume pipettes and pipettes with an adjustable volume setting.
The control button is multi-functional. The function executed by the pipette depends on how far its control button is pressed down.

Ex
20 °C

Three steps are necessary to operate the pipette:

1. Measuring stroke
   Press the control button down until the first stop. The desired volume of liquid is dispensed or, when the button is released, aspirated.
2. Blow-out
   Press the button down a little more until the next stop.
   Any liquid remaining in the pipette tip is emptied.
3. Ejection
   Press the button all the way down.
   The pipette tip is ejected.

Artisan Technology Group - Quality Instrumentation ... Guaranteed | (888) 88-SOURCE | www.artisantg.com

4 Operation

The pipette can be individually labelled. The autoclavable blank adhesive label provided can be marked with a permanent marker and fits onto the identification area on the top of the housing.

4.1 Volume setting

The volume is adjusted by pressing down the lateral catch and turning the control button at the same time.

It is advisable to carry out volume setting from the higher down to the lower value. i.e. first go above the desired volume and then return to the lower value.

4.2 Pipette tips

The pipette can function only when a pipette tip is attached into which the liquid is aspirated.

To facilitate the search for a suitable tip, the color of the control buttons corresponds to the color of the **eppendorf** tip racks.

When pipetting liquids with wetting properties different to those of water, please observe the recommendations contained in Section 4.5.

4.3 Aspirating liquid

- The liquid which is to be aspirated is taken from a suitable vessel.
- Attach suitable pipette tip to the pipette firmly (observe the color coding).
- Press down the control button to the first stop (measuring stroke).
- Immerse the pipette tip vertically approx. 3 mm into the liquid.
- Allow the control button to slide back **slowly**.
- Pull the tip out of the liquid **slowly**.
- To remove any remaining droplets, dab with non-fibrous cellulose material. When doing so, ensure that no liquid comes out of the tip.

Artisan Technology Group - Quality Instrumentation ... Guaranteed | (888) 88-SOURCE | www.artisantg.com

4.4 Dispensing liquid

- Hold the tip at an angle against the inside wall of the tube.
- Press down the control button slowly to the first stop (measuring stroke) and wait until the liquid stops flowing.
- Press down the control button to the second stop (blow-out) until the tip is completely empty.
- Hold down the control button and pull the tip up the inner wall of the tube.
- Allow the control button to slide back slowly.
- Tip is ejected by pressing the control button to the final stop.

Please do not lay down the pipette when a filled pipette tip is attached as this may result in liquid entering the pipette!

4.5 Special notes

To guarantee the highest degree of precision and accuracy, we recommend pre-wetting all new tips by aspirating and dispensing liquid two or three times before pipetting.
Finally, with the tip not in contact with the liquid, empty it completely on the inner wall of the tube (via blow-out).

Explanation: Why does the pipette tip have to be **pre-wetted**?
To compensate for the properties of the liquid.
Wetting liquids (serum, detergent) form a thin film on the inner wall of the pipette tip. When the first pipetting is carried out, the volume dispensed would thus be too low.
When pipetting serum or high-viscosity solutions, wait a few seconds when aspirating and dispensing liquid.

Artisan Technology Group - Quality Instrumentation ... Guaranteed | (888) 88-SOURCE | www.artisantg.com

5 Testing / Alignment

The serial number of the pipette is located on its control button.

5.1 Testing

Volumes < 1 µl:
We recommend the photometric test. Our brochure "Photometric test for checking the precision and accuracy of small volumes" is available upon request.

Volumes > 1 µl:
For volumes ≥ 1 µl, the test can be performed by weighing the volume using an analytical balance with a sufficient level of sensitivity.

The bidistilled water, weighing vessel, pipette and pipette tip must all be the same temperature!

To calculate the volume, divide the weight by the density of the water (at 20 °C: 0.9982).

Volumes 1 – 10 µl:
The test is performed by taking the volume from a weighed, water-filled tube.

Volumes > 10 µl:
Distilled water is dispensed from a pre-wetted tip into a tube and is then weighed.

5.2 Alignment

5.2.1 When should alignment be carried out?

The pipettes in the Reference-Serie were tested during production in accordance with the measurement conditions for water listed in Section 2.

In the case of doubts arising about the accuracy of the pipetted volume, the following points should first be checked:

- Is the pipette leaking? (This is one possible reason for dispensed volumes being too low; troubleshooting and solutions are contained in Section 7)
- What is the temperature of the sample? (In open tubes, water at room temperature cools down due to evaporation.)
- What is the temperature of the pipette?
- What is the temperature of the air?

Artisan Technology Group - Quality Instrumentation ... Guaranteed | (888) 88-SOURCE | www.artisantg.com

– Has mg been converted into µl?

– Does the sample have a different density to that of water?

– Is the pipetting speed too high?

If the place where the pipette is used is at extremely high altitude, an adjustment must be made in line with the ambient air pressure. At 1,000 m above sea level, there is a volume error of approx. –0.4 %.

Assistance with these questions is contained in **eppendorf's** SOP (**S**tandard **O**perating **P**rocedure). An SOP can be called up from our home page *www.eppendorf.com*

If these checks prove to be unsuccessful, it is safe to assume that the alignment of the pipette has altered (e.g. due to several components having been replaced).

5.2.2 Follow-up alignment in the case of error

From a technical point of view, this is a zero-point shift. The value by which the setting of the pipette is shifted remains constant across the entire measuring range. If, for example, in the case of a 10 – 100 µl pipette, follow-up alignment of 1 µl is carried out at 100 µl (=1 %), the pipette is also adjusted by 1 µl at 10 µl (= 10 %!)

Alignment Reference fix:

To assist you in finding the basic setting again, round adhesive labels with an arrow are provided as an alignment aid.

– Stick the alignment aid onto the control button.

Determine the volume by weighing and calculation
(see point a – c "Alignment Reference variable").

d

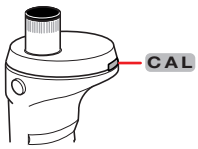

Pierce the calibration seal attached to the opening for adjustments with Side B of the key provided. This destroys the seal which should be removed. Undo the screw inside a little until the control button can be turned.

Artisan Technology Group - Quality Instrumentation ... Guaranteed | (888) 88-SOURCE | www.artisantg.com

e Adjust control button by the volume determined.
One revolution of the control button corresponds to the following values for water:

Reference fix	Vol./revol.
1, 2, 5, 10 µl	approx. 0.5 µl
10, 20 µl	approx. 1 µl
25, 50 µl	approx. 2.4 µl
100 µl	approx. 5 µl
200, 250 µl	approx. 12 µl
500, 1000 µl	approx. 46 µl
1500, 2000, 2500 µl	approx. 118 µl

Clockwise rotation: decrease in volume.
Counterclockwise rotation: increase in volume.

f Tighten the screw until the control button can no longer be turned.

Then continue as described in steps f and g of the Alignment Reference variable.

If the nominal volume does not correspond with the measuring result, repeat steps d – g.
Then reseal the adjustment opening using one of the calibration seals supplied.

Alignment Reference variable:

a The pipette, tip and water must all be the same temperature (20 – 25 °C, constant to ± 0.5 °C).

b Set the Reference variable to the desired nominal volume.

c With a pipette tip attached to the pipette, the desired volume is pipetted and weighed 10 times. The average of this weighing is converted into µl using the following formula:

$$\text{Volume} = \frac{\text{Weight}}{\text{Density of liquid}}$$

(at the temperature specified)

The value obtained is the actual setting (density of water at 20 °C: 0.9982).

Artisan Technology Group - Quality Instrumentation ... Guaranteed | (888) 88-SOURCE | www.artisantg.com

d 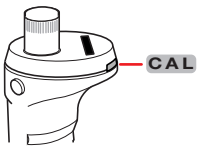

Pierce the calibration seal attached to the opening for adjustments with Side B of the key provided. This destroys the seal which should be removed. Carefully attach the key to the adjusting sleeve inside.

e Turn the wrench to adjust the volume display of the pipette (with piston stroke unchanged) to the actual volume (measurement under step c).

f Remove the wrench.

g Repeat step c). The readings must be within the tolerances specified in the technical data.

If the nominal value still does not agree with the measuring result, repeat steps d – g.

Since this adjustment affects the entire measuring range, it is imperative to check the other volumes of this pipette specified in the technical data.
Then reseal the adjustment opening using one of the calibration seals supplied.

5.2.3 Adjustment for liquids with a density different to that of water

It is possible to adjust the pipette for **one specific volume of liquid** with a density different to that of water in such a way that the volume displayed corresponds to the volume pipetted.

All other values for the adjustable pipettes are now out of alignment, i.e. an adjustable-volume pipette has been converted into a fixed-volume pipette!

Proceed as described in Section 5.2.2.

⚠ A pipette set in this way delivers a pipetting value that correlates with that in the display **only for the liquid used and for the volume tested**! For this reason, we very strongly recommend labeling the converted pipette **as a fixed-volume pipette** for "Solution y"!
The error for liquids with a higher vapor pressure (e.g. organic solvents) cannot be aligned in this way. In this case, we recommend using an **eppendorf** positive-displacement pipette.

Artisan Technology Group - Quality Instrumentation ... Guaranteed | (888) 88-SOURCE | www.artisantg.com

6 Care / Sterilization

6.1 Care

Depending on the frequency of use, all parts of the pipette should be cleaned from time to time in a soap solution or should be carefully wiped clean using isopropanol. They should then be rinsed in distilled water and dried.
The seals are maintenance-free and the pistons should be lubricated lightly (using the silicone grease provided) when cleaned or replaced.

Severe contamination caused by the liquid entering the pipette can be removed after the pipette has been disassembled (see Part B, Maintenance).

For information about replacing defective parts, please see Part B, Maintenance.

6.2 Sterilization

The Reference-Serie including the blank label provided (marked with a permanent marker) is fully autoclavable at 121 °C for 20 minutes.
Before autoclaving, unscrew the pipette at the central junction by rotating about one revolution. This enables steam to penetrate more easily into the pipette during autoclaving.
After autoclaving, the pipette may have to be dried at room temperature.
Retighten the central junction only after the pipette has completely cooled.
The nose cone may have to be tightened again with the wrench (see part B, Maintenance).

The Reference can be stored aseptically under ultra violet light ≥ 254 nm.

Artisan Technology Group - Quality Instrumentation ... Guaranteed | (888) 88-SOURCE | www.artisantg.com

6.3 Decontamination prior to dispatch

If the Reference pipette is to be checked, repaired or calibrated by Eppendorf AG or another service partner, it must be free of hazardous substances and clean!

A form called "Decontamination certificate for pipettes" is enclosed with the packaging when the pipette is delivered.
A form called "Decontamination certificate for return of goods" and general notes about decontamination are available on our home page:
www.eppendorf.com
A signed decontamination certificate must be enclosed with the pipette when it is returned. The serial number of the Reference must be entered on the decontamination certificate.
The Reference can be decontaminated of potentially infectious substances by being steam-autoclaved (see Sec. 6.2).
The surfaces of the pipette can be disinfected with alcohol (ethanol, propanol) or with a disinfectant containing alcohol.

Artisan Technology Group - Quality Instrumentation ... Guaranteed | (888) 88-SOURCE | www.artisantg.com

7 Troubleshooting

Error	Cause	Solution
Droplets on the inner wall of the pipette tip.	– Uneven wetting of the plastic wall. – A pipette tip with poor wetting properties has been used.	– Attach a new pipette tip. – Use an original **eppendorf** tip.
Pipette is dripping and/or the volume pipetted is incorrect.	– The tip is loose. – A poorly fitting pipette tip has been used. – Liquid with a high vapor pressure has been pipetted. – Tip has been taken out of the liquid too quickly. The pipette is dripping because: – Piston is contaminated. – Piston is damaged. – Seals are damaged. – Nose cone loose.	– Press the tip firmly in place. – Use an original **eppendorf** tip. – In this case, we recommend pipetting using a positive-displacement pipette. – Remove the tip slowly from the liquid. – Clean and lightly lubricate the piston. – Replace the piston and seal (see Part B, Maintenance). – Replace all seals (see Part B, Maintenance). – Lightly tighten nose cone with wrench (see Part B, Maintenance). Exchange, where necessary.

Artisan Technology Group - Quality Instrumentation ... Guaranteed | (888) 88-SOURCE | www.artisantg.com

Error	Cause	Solution
Control button jams, moves erratically.	– Piston contaminated.	– Clean piston and lubricate lightly.
	– Seals contaminated.	– Disassemble pipette. Clean all seals and exchange where necessary (see Part B, Maintenance).
	– Penetration of solvent vapors.	– Unscrew pipette at the central junction and ventilate. Clean piston and lubricate lightly.
Pipette blocked, too little liquid is aspirated.	– Liquid has penetrated the nose cone and dried.	– Unscrew pipette at the central junction, rinse lower part first with warm water, then with distilled water and allow to dry. Or: – Disassemble pipette. Replace ejector seal in the nose cone (see Part B, Maintenance).
	For 25 to 500 µl pipettes: – The filling tube in the nose cone is blocked.	For 25 to 50 µl: – Replace nose cone. For 10 to 500 µl: – Replace the filling tube in the nose cone (see Part B, Maintenance).

Artisan Technology Group - Quality Instrumentation ... Guaranteed | (888) 88-SOURCE | www.artisantg.com

If there is doubt that dispensing data are correct

To avoid dispensing errors, the precision and accuracy of the Reference pipettes need to be checked regularly. The PICASO II software program (see ordering information) is available to determine permitted systematic and random measuring deviation (see Section 2 "Technical data"). An SOP (**S**tandard **O**perating **P**rocedure) for checking pipettes can be called up from our home page www.eppendorf.com.

For liquids whose physical data deviate significantly from those of water, calibration needs to be changed in accordance with Section 5.2.3.
Calibration will also need to be changed if the pipette is being used at a very high altitude.

Artisan Technology Group - Quality Instrumentation ... Guaranteed | (888) 88-SOURCE | www.artisantg.com

Reference® – Part B – Contents

Maintenance

I. Exchanging the piston 81
II. Exchanging the seals 81
Removing the seals 82
Inserting the seals 87
III. Exchanging the filling tube 87
IV Exchanging the nose cone 87

Ordering information

I. Reference fix 88
II. Reference variable 91
IIa. Additional accessories 93
III. Pipette holder 94
IV. Pipette tips 94

Please only use the accessories recommended by eppendorf. Using spare parts and disposables which we have not recommended can reduce the precision, accuracy and life of the pipette. We do not honor any warranty or accept any responsibility for damage resulting from such action.

Artisan Technology Group - Quality Instrumentation ... Guaranteed | (888) 88-SOURCE | www.artisantg.com

Reference® – Part B – Maintenance

For information on replacing pistons and seals as well as on disassembling and assembling the different models in the Reference-Serie please open the fold-out cover at the front of this manual.
The fix and variable pipettes are of identical construction. You should therefore refer to the figure corresponding to the volume of your pipette or the volume range it falls in.

I. Exchanging the piston

- Unscrew pipette at the central junction.
- Press control button and hold down. Hold piston at the top of the piston mounting and pull off. If the piston fits too tightly, the spring at the piston mounting can be pressed down slightly with side B of the wrench and the piston then pulled off.
- Attach new piston down to the stop and lubricate lightly.

II. Exchanging the seals

The lower parts of the Reference-Serie can be completely disassembled for cleaning and maintenance using the wrench provided.

The wrench has the following functions:

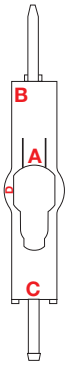

A = Narrow opening: for loosening and tightening the nose cone.
Wide opening (D): For tightening the nose cone (with the lettering facing the pipette tip).
The wrench is designed in such a way that the nose cone cannot be tightened too much.

B = For loosening the screw in the nose cone.
During assembly, for mounting the screw, spring and seal and tightening the screw.
During alignment, for adjusting the volume display.

C = For removing the seal in the nose cone.

Artisan Technology Group - Quality Instrumentation ... Guaranteed | (888) 88-SOURCE | www.artisantg.com

Removing the seals

Fig. 2 – 6 on the following pages show you how to remove the seals. The numbers shown are identical with the numbers in the Ordering information (see page 78) and the numbers of the parts on the fold-back cover at the front of this manual.

0.1 – 2.5 µl, 0.5 – 10 µl and 2 – 20 µl (Fig. 2)

Push the control button all the way down and pull off the ejector sleeve (13).

Piston seal
The piston seal in the nose cone is exchanged by replacing the entire nose cone (11).

Tighten the nose cone (see IV of this part).

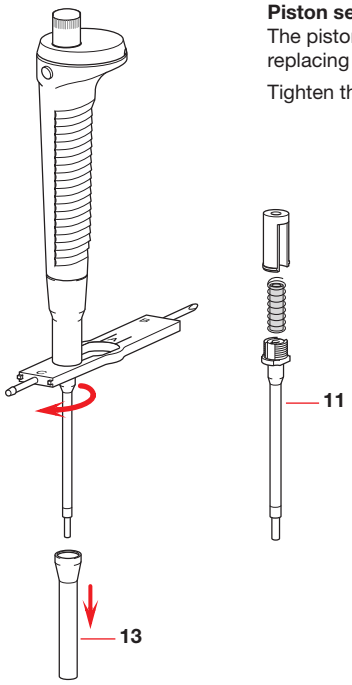

Artisan Technology Group - Quality Instrumentation ... Guaranteed | (888) 88-SOURCE | www.artisantg.com

10 – 100 µl (Fig. 3)

Push the control button all the way down and pull off the ejector sleeve (13).

Piston seal (4)
- Unscrew pipette.
- Discard seal (4) with O-ring.
- Insert new seal (see "Inserting the seals").

Tighten the nose cone (see IV of this part).

The nose cone (11) is also available complete with seal.

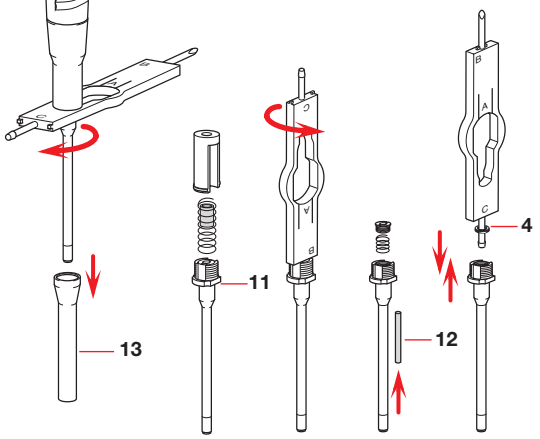

Artisan Technology Group - Quality Instrumentation ... Guaranteed | (888) 88-SOURCE | www.artisantg.com

50 – 200 µl (Fig. 4)

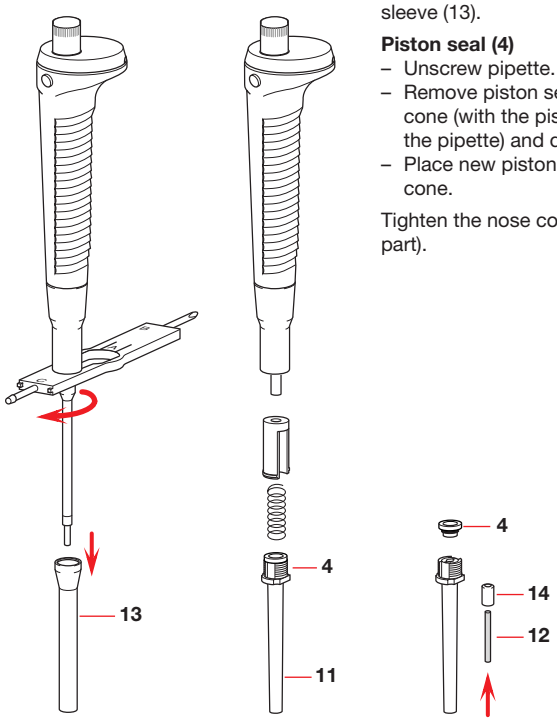

Push the control button all the way down and pull off the ejector sleeve (13).

Piston seal (4)

- Unscrew pipette.
- Remove piston seal (4) from nose cone (with the piston in the grip of the pipette) and discard.
- Place new piston seal onto nose cone.

Tighten the nose cone (see IV of this part).

Artisan Technology Group - Quality Instrumentation ... Guaranteed | (888) 88-SOURCE | www.artisantg.com

50 – 250 µl (Fig. 5)

Push the control button all the way down and pull off the ejector sleeve (13).

Piston seal (4)
- Unscrew pipette at the central junction.
- Discard piston seal (4). Insert new piston seal into the clamp (3) and place both into the lower part (5).

Ejector seal (10)
- Unscrew lower part of the pipette.
- Discard seal (10) with O-ring.
- Insert new seal (see "Inserting the seals").

Tighten the nose cone (see IV of this part).

The nose cone (11) is also available complete with seal.

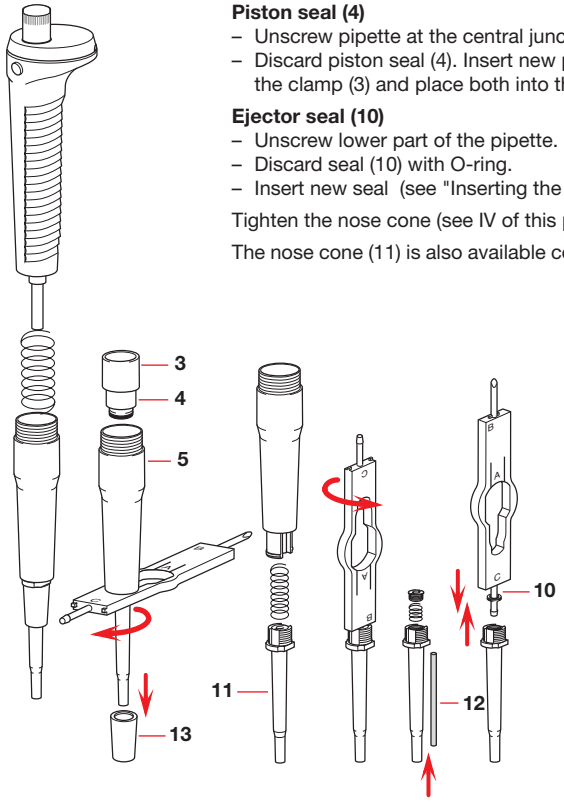

Artisan Technology Group - Quality Instrumentation ... Guaranteed | (888) 88-SOURCE | www.artisantg.com

100 – 1000 and 500 – 2500 µl (Fig. 6)

Push the control button all the way down and pull off the ejector sleeve (13).

Piston seal (4)
- Unscrew pipette at the central junction.
- Discard piston seal (4) and replace.

Ejector seal (10)
- Unscrew lower part of the pipette.
- Discard seal (10) with O-ring.
- Insert new seal (see "Inserting the seals").

Tighten the nose cone (see IV of this part).

The nose cone (11) is also available complete with ejector seal.

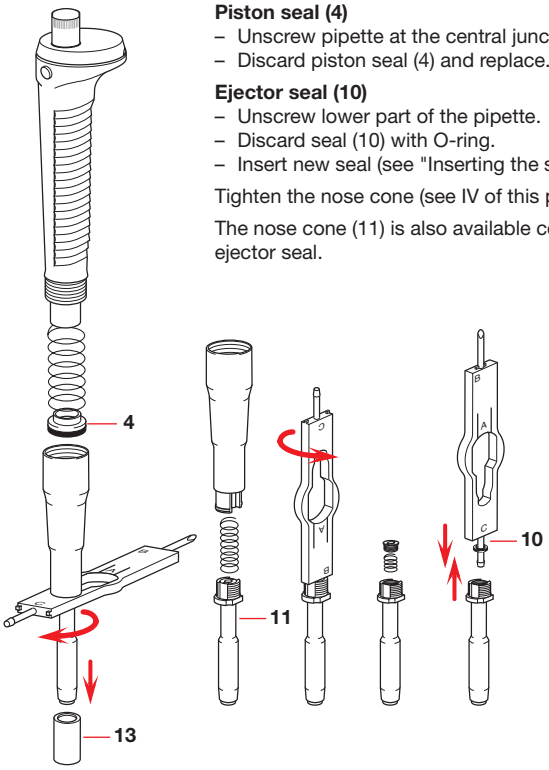

Artisan Technology Group - Quality Instrumentation ... Guaranteed | (888) 88-SOURCE | www.artisantg.com

Inserting the seals

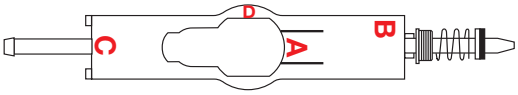

Pull new seal off the pin and push screw, spring, seal (with plastic part first) in that order onto side B of the wrench as shown in the figure and screw lightly into nose cone. Do not tighten too much. Assemble pipette again.

III. Exchanging the filling tube

10 – 100 µl, 50 – 200 µl and 50 – 250 µl (Fig. 3, 4, 5)

Filling tube (12)

- Unscrew lower part of the pipette.
- Push filling tube (12) (and damping tube (14) for 50 – 250 µl) out of the nose cone from below with the wire punch. Push in new tube from above.

IV. Exchanging the nose cone

After the ejector sleeve has been pulled off, the nose cone together with the seal (11) can be loosened with the wrench (A, narrow opening) and exchanged (together with the seal. See Fig. 2 – 6).

Tighten the nose cone:
Place wrench with the wide opening (A, lettering facing the pipette tip) onto the nose cone and tighten until it locks into position by turning half a revolution. The wrench is designed in such a way that the nose cone cannot be tightened too much.

Caution
After exchanging parts or completing other maintenance, always check that the pipette functions correctly (see Part A, Section 7 of this Manual).

If a problem cannot be solved with the aid of the recommendations above, please return the **eppendorf** Reference to your **eppendorf** appointed dealer.

Artisan Technology Group - Quality Instrumentation ... Guaranteed | (888) 88-SOURCE | www.artisantg.com

Reference® – Part B – Ordering information

I. Reference fix

(Please open up the fold-back cover at the front of this manual).
Only parts with order numbers are available separately.

Pipettes / spare parts

Models

Gray control button (for 10 µl pipette tips)	
1 µl	4900 000.010
2 µl	4900 000.028
5 µl	4900 000.036
10 µl	4900 000.044
Yellow control button (for 100 µl pipette tips)	
10 µl	4900 000.109
20 µl	4900 000.117
25 µl	4900 000.150
50 µl	4900 000.125
100 µl	4900 000.133
Blue control button (for 1000 µl pipette tips)	
200 µl	4900 000.508
250 µl	4900 000.540
500 µl	4900 000.516
1000 µl	4900 000.524
Red control button (for 2500 µl pipette tips)	
1500 µl	4900 000.923
2000 µl	4900 000.907
2500 µl	4900 000.915
1 Piston	
1 – 10 µl	4910 810.001
20 µl	4910 811.008
25 – 50 µl	4900 810.003
100 µl, incl. piston seal (4)	4910 812.004
200 – 250 µl, incl. piston seal (4)	4910 813.000
500 – 1000 µl, incl. piston seal (4)	4910 814.007
1500 – 2500 µl, incl. piston seal (4)	4910 815.003

Artisan Technology Group - Quality Instrumentation ... Guaranteed | (888) 88-SOURCE | www.artisantg.com

2	**Spring for piston seal**	
	1 – 250 µl	4910 825.009
	500 – 1000 µl	4910 826.005
	1500 – 2500 µl	4910 827.001
3	**Clamp**	not sold separately
4	**Piston seal**	
	incl. screw (8), spring (9)	
	100 µl	4910 820.007
	incl. screw (8), spring (9), ejector seal (10)	
	200 – 250 µl	4910 821.003
	500 – 1000 µl	4910 822.000
	1500 – 2500 µl	4910 823.006
5	**Lower part**	not sold separately
6	**Ejector**, incl. spring (7)	
	1 – 20 µl, incl. tube	4910 839.000
	25 – 100 µl, incl. tube	4910 840.008
	200 – 250 µl	4910 841.004
	500 – 1000 µl	4910 842.000
	1500 – 2500 µl	4910 843.007
7	**Ejector sleeve** (1 – 100 µl, incl. tube)	
8	**Screw**	not sold separately
9	**Spring**	not sold separately
10	**Ejector seal**	not sold separately
11	**Nose cone**, complete, incl. seal	
	1 – 10 µl, gray, incl. seal	4910 830.002
	10 – 20 µl, yellow, incl. seal	4910 832.005
	25 – 50 µl, incl. (8), (9), (4), (12)	4900 830.004
	100 µl, incl. (8), (9), (4), (12)	4910 833.001
	200 – 250 µl, incl. (8), (9), (10), (12)	4910 834.008
	500 µl, incl. (8), (9), (10), (12)	4900 831.000
	1000 µl, incl. (8), (9), (10)	4910 835.004
	1500 – 2500 µl, incl. (8), (9), (10)	4910 836.000

Artisan Technology Group - Quality Instrumentation ... Guaranteed | (888) 88-SOURCE | www.artisantg.com

Reference® – Part B – Ordering information

12 Filling tube
(5 pieces, 1 wire punch)

	100 µl	4910 837.007
200 –	250 µl	4910 838.003
	500 µl	4900 837.009

13 Ejector sleeve

1 –	100 µl	4910 845.000
200 –	1000 µl	4910 846.006
1500 –	2500 µl	4910 847.002

Lower part, complete, incl. piston and (3) – (13)

1 –	10 µl	4910 890.005
10 –	20 µl, yellow	4910 892.008
25 –	50 µl	4900 890.007
	100 µl	4910 893.004
200 –	250 µl	4910 894.000
	500 µl	4900 891.003
	1000 µl	4910 895.007
1500 –	2500 µl	4910 896.003

Reference repair set (1 tube of silicone grease, 1 wrench, 6 blank labels, 1 wire punch, 1 filling tube each for 100 µl, 200 – 250 µl and 500 µl)	4910 805.008
Alignment aid (5 pieces)	4900 805.000
Silicone grease for piston	0013 063.010
Wrench	4910 092.001
Calibration seal, red (5 pcs.)	4910 601.003

Artisan Technology Group - Quality Instrumentation ... Guaranteed | (888) 88-SOURCE | www.artisantg.com

Reference® – Part B – Ordering information

II. Reference variable

(Please open up the fold-back cover at the front of this manual).
Only parts with order numbers are available separately.

Pipettes / spare parts

Models

Dark gray control button (for 2.5 µl pipette tips)		
0.1 – 2,5 µl		4910 000.085
Light gray control button (for 10 µl pipette tips)		
0.5 – 10 µl		4910 000.018
2 – 20 µl		4910 000.026
Yellow control button (for 100 µl pipette tips)		
2 – 20 µl		4910 000.034
10 – 100 µl		4910 000.042
50 – 200 µl		4910 000.093
Blue control button (for 1000 µl pipette tips)		
50 – 250 µl		4910 000.050
100 – 1000 µl		4910 000.069
Red control button (for 2500 µl pipette tips)		
500 – 2500 µl		4910 000.077
1 Piston		
0.1 – 2,5 µl		4910 809.003
0.5 – 10 µl		4910 810.001
2 – 20 µl		4910 811.008
10 – 100 µl,	incl. piston seal (4)	4910 812.004
50 – 200 µl,	incl. piston seal (4)	4910 816.000
50 – 250 µl,	incl. piston seal (4)	4910 813.000
100 – 1000 µl,	incl. piston seal (4)	4910 814.007
500 – 2500 µl,	incl. piston seal (4)	4910 815.003
2 Spring for piston seal		
50 – 250 µl		4910 825.009
100 – 1000 µl		4910 826.005
500 – 2500 µl		4910 827.001
3 Clamp		not sold separately

Artisan Technology Group - Quality Instrumentation ... Guaranteed | (888) 88-SOURCE | www.artisantg.com

Reference® – Part B – Ordering information

4	**Piston seal**		
	10 – 100 µl,	incl. screw (8), spring (9)	.4910 820.007
	50 – 200 µl,	with 2 O-rings	4910 824.002
incl. screw (8), spring (9), ejector seal (10):			
	50 – 250 µl		4910 821.003
	100 – 1000 µl		4910 822.000
	500 – 2500 µl		4910 823.006
5	**Lower part**		not sold separately
6	**Ejector**, incl. spring (7)		
	0.1 – 2.5 µl		4910 839.000
	0.5 – 10 µl		4910 839.000
	2 – 20 µl		4910 839.000
	10 – 100 µl		4910 840.008
	50 – 200 µl		4910 844.003
	50 – 250 µl		4910 841.004
	100 – 1000 µl		4910 842.000
	500 – 2500 µl		4910 843.007
7	**Ejector spring**,		
(0.1 – 2.5, 0.5 – 10, 2 – 20, 10 – 100 µl, incl. tube)			not sold separately
8	**Screw**		not sold separately
9	**Spring**		not sold separately
10	**Ejector seal**		not sold separately
11	**Nose cone complete**		
	0.1 – 2.5 µl,	incl. seal	4910 829.004
	0.5 – 10 µl,	incl. seal	4910 830.002
	2 – 20 µl,	light gray, incl. seal	4910 831.009
	2 – 20 µl,	yellow, incl. seal	4910 832.005
	10 – 100 µl,	incl. (8), (9), (4), (12)	4910 833.001
	50 – 200 µl,	incl. (12), (14)	4910 851.000
	50 – 250 µl,	incl. (8), (9), (10), (12)	4910 834.008
	100 – 1000 µl,	incl. (8), (9), (10)	4910 835.004
	500 – 2500 µl,	incl. (8), (9), (10)	4910 836.000
12	**Filling tube**		
(5 pieces, 1 wire punch)			
	10 – 100 µl		4910 837.007
	50 – 200 µl,	incl. (14) 2 pieces	4910 853.002
	50 – 250 µl		4910 838.003

Artisan Technology Group - Quality Instrumentation ... Guaranteed | (888) 88-SOURCE | www.artisantg.com

13 Ejector sleeve

0.1 – 2.5 µl	4910 845.000
0.5 – 10 µl	4910 845.000
2 – 20 µl	4910 845.000
10 – 100 µl	4910 845.000
50 – 200 µl	4910 852.006
50 – 250 µl	4910 846.006
100 – 1000 µl	4910 846.006
500 – 2500 µl	4910 847.002

14 Damping tube not sold separately

Lower part, incl. piston and (3) – (14)

0.1 – 2.5 µl	4910 889.007
0.5 – 10 µl	4910 890.005
2 – 20 µl, light gray	4910 891.001
2 – 20 µl, yellow	4910 892.008
10 – 100 µl	4910 893.004
50 – 200 µl	4910 897.000
50 – 250 µl	4910 894.000
100 – 1000 µl	4910 895.007
500 – 2500 µl	4910 896.003

Reference repair set 4910 805.008
(1 tube of silicone grease, 1 wrench, 6 blank labels,
1 wire punch,
1 filling tube each for 10 – 100 µl, 50 – 200 µl and 50 – 250 µl,
1 damping tube for 50 – 200 µl)

Wrench 4910 092.001

IIa. Additional accessories

Silicone grease	0013 063.010
Instruction manual	4910 900.132
PICASO II (Pipette Calibration Software)	3113 004.001
PICASO accessories see eppendorf catalog	
Calibration seal, red (5 pcs.)	4910 601.003

Artisan Technology Group - Quality Instrumentation ... Guaranteed | (888) 88-SOURCE | www.artisantg.com

Reference® – Part B – Ordering information

III. Pipette holder

Pipette carousel (incl. 6 pipette supports)	3115 000.003
Pipette holder (replacement for stand)	3115 600.019
Pipette holder (with adhesive surface for attachment to lab benches and wall)	3115 000.020

IV. Pipette tips

epT.I.P.S.
(The packaging units stated represent the minimum ordering quantity).

	Color code	Order no.
Standard, in bags, 2x 500 = 1000 tips		
0.1 – 10 µl	anthracite	0030 000.811
0.1 – 20 µl	dark gray	0030 000.838
0.5 – 20 µl L	light gray	0030 000.854
2 – 200 µl	yellow	0030 000.870
50 – 1000 µl	blue	0030 000.919
500 – 2500 µl (500 tips)	red	0030 000.951
Set, 1 Box, incl. 5x 96 tips		
0.1 – 10 µl	anthracite	0030 073.207
0.1 – 20 µl	dark gray	0030 073.223
0.5 – 20 µl L	light gray	0030 073.240
2 – 200 µl	yellow	0030 073.266
50 – 1000 µl	blue	0030 073.304
500 – 2500 µl (5x 48 tips)	red	0030 073.347
Reloads, 10x 96 = 960 tips		
0.1 – 10 µl (in stacks)	anthracite	0030 073.363
0.1 – 20 µl	dark gray	0030 073.380
0.5 – 20 µl L	light gray	0030 073.401
2 – 200 µl (in stacks)	yellow	0030 073.428
50 – 1000 µl	blue	0030 073.460
500 – 2500 µl (10x 48 = 480 tips)	red	0030 073.509
Reloads PCR-clean, 10x 96 = 960 tips		

Artisan Technology Group - Quality Instrumentation ... Guaranteed | (888) 88-SOURCE | www.artisantg.com

Reference® – Part B – Ordering information

	Color code	Order no.
0.1 – 10 µl (in stacks)	anthracite	0030 073.746
0.1 – 20 µl	dark gray	0030 073.762
0.5 – 20 µl L	light gray	0030 073.789
2 – 200 µl (in stacks)	yellow	0030 073.800
50 – 1000 µl	blue	0030 073.843
500 – 2500 µl (10x 48 = 480 tips)	red	0030 073.886

Box, 1 box plus 96 tips

0.1 – 10 µl	anthracite	0030 073.002
0.1 – 20 µl	dark gray	0030 073.029
0.5 – 20 µl L	light gray	0030 073.045
2 – 200 µl	yellow	0030 073.061
50 – 1000 µl	blue	0030 073.100
500 – 2500 µl (48 tips)	red	0030 073.142

Racks Eppendorf Biopur, colorless, pyrogen-free, DNA-free, RNase-free, ATP-free
5x 96 = 480 tips

0.1 – 20 µl	dark gray	0030 075.005
2 – 200 µl	yellow	0030 075.021
50 – 1000 µl	blue	0030 075.064
500 – 2500 µl (240 tips)	red	0030 075.102

Singles (Eppendorf Biopur), individually wrapped, 100 tips

0.1 – 20 µl	dark gray	0030 010.019
2 – 200 µl	yellow	0030 010.035
50 – 1000 µl	blue	0030 010.051

ep Dualfilter T.I.P.S., PCR-clean, sterile, in racks, 10x 96 = 960 tips

0.1 – 10 µL S	anthracite	0030 077.504
0.1 – 10 µL M	dark gray	0030 077.512
0.5 – 10 µL L	light gray	0030 077.520
2 – 20 µL	yellow	0030 077.539
2 – 100 µL	yellow	0030 077.547
2 – 200 µL	yellow	0030 077.555
20 – 300 µL	orange	0030 077.563
50 – 1000 µL	blue	0030 077.571

GELoader® tips (f. 0.5 – 10 µl)

1 set = 200 tips	light gray	0030 001.222

Artisan Technology Group - Quality Instrumentation ... Guaranteed | (888) 88-SOURCE | www.artisantg.com

Eppendorf Offices

ASEAN

Eppendorf AG
Regional Office in Malaysia
Tel. +60 3 8023 2769
Fax +60 3 8023 3720
E-Mail: eppendorf@eppendorf.com.my
Internet: www.eppendorf.com.my

AUSTRALIA / NEW ZEALAND

Eppendorf South Pacific Pty. Ltd.
Tel. +61 2 9889 5000
Fax +61 2 9889 5111
E-mail: Info@eppendorf.com.au
Internet: www.eppendorf.com.au

AUSTRIA

Eppendorf AG
c/o Schott Austria
Tel. +43 1 29017560
Fax +43 1 290175620
E-Mail: gilch.p@eppendorf.de
Internet: www.eppendorf.com

BRAZIL

Eppendorf do Brasil Ltda.
Tel. +55 11 30 95 93 44
Fax +55 11 30 95 93 40
E-Mail: eppendorf@eppendorf.com.br
Internet: www.eppendorf.com.br

CANADA

Eppendorf Canada, Ltd.
Tel. +1 905 826 5525
Fax +1 905 826 5424
E-Mail: canada@eppendorf.com
Internet: www.eppendorf.com

CHINA

Eppendorf AG
Tel. +86 21 68760880
Fax +86 21 50815371
E-Mail: market.info@eppendorf.cn
Internet: www.eppendorf.cn

FRANCE

EPPENDORF FRANCE S.A.R.L.
Tel. +33 1 30 15 67 40
Fax +33 1 30 15 67 45
E-Mail: eppendorf@eppendorf.fr
Internet: www.eppendorf.fr

GERMANY

Eppendorf Vertrieb
Deutschland GmbH
Tel. +49 02232 418-0
Fax +49 02232 418-155
E-Mail: vertrieb@eppendorf.de
Internet: www.eppendorf.de

INDIA

Eppendorf India Limited
Tel. +91 44 52111314
Fax +91 44 52187405
E-Mail: info@eppendorf.co.in
Internet: www.eppendorf.co.in

ITALY

Eppendorf s.r.l.
Tel. +390 2 55 404 1
Fax +390 2 58 013 438
E-Mail: eppendorf@eppendorf.it
Internet: www.eppendorf.it

Artisan Technology Group - Quality Instrumentation ... Guaranteed | (888) 88-SOURCE | www.artisantg.com

Eppendorf Offices

JAPAN

Eppendorf Japan Co. Ltd.
Tel. +81 3 5825 2363
Fax +81 3 5825 2365
E-Mail: info@eppendorf.jp
Internet: www.eppendorf.jp

NORDIC

Eppendorf Nordic Aps
Tel. +45 70 22 2970
Fax +45 45 76 7370
E-Mail: nordic@eppendorf.dk
Internet: www.eppendorf.dk

SPAIN

Eppendorf Ibérica S.L.
Tel. +34 91 651 76 94
Fax +34 91 651 81 44
E-Mail: iberica@eppendorf.de
Internet: www.eppendorf.es

SWITZERLAND

Vaudaux-Eppendorf AG
Tel. +41 61 482 1414
Fax +41 61 482 1419
E-Mail: vaudaux@vaudaux.ch
Internet: www.eppendorf.com

UNITED KINGDOM

Eppendorf UK Limited
Tel. +44 1223 200 440
Fax +44 1223 200 441
E-Mail: sales@eppendorf.co.uk
Internet: www.eppendorf.co.uk

USA

Eppendorf North America
Tel. +1 516 334 7500
Fax +1 516 334 7506
E-Mail: info@eppendorf.com
Internet: www.eppendorfna.com

OTHER COUNTRIES

see:
www.eppendorf.com/worldwide

Artisan Technology Group - Quality Instrumentation ... Guaranteed | (888) 88-SOURCE | www.artisantg.com

Reference Rück Seite 114 Donnerstag, 23. November 2006 5:24 17

eppendorf® is a registered trademark.
B4910 900.132-06/1106 · Printed in Germany · Printed on chlorine-free bleached paper

eppendorf

In touch with life

Your local distributor: www.eppendorf.com/worldwide

Eppendorf AG · 22331 Hamburg · Germany · Tel. +49 40 538 01-0 · Fax +49 40 538 01-556
E-Mail: eppendorf@eppendorf.com

Eppendorf North America, Inc. · One Cantiague Road, P.O. Box 1019
Westbury, N.Y. 11590-0207 USA · Tel. +1 516 334 7500 · Toll free phone 800 645 3050
Fax +1 516 334 7506 · E-Mail: info@eppendorf.com

Application Support
Europe, International: Tel. +49 1803 666 789 · E-Mail: support@eppendorf.com
North America: Tel. 800 645 3050 ext. 2258 · E-Mail: support_NA@eppendorf.com
Asia, Pacific: Tel. +603 8023 2769 · E-Mail: support_Asia@eppendorf.com

Artisan Technology Group - Quality Instrumentation ... Guaranteed | (888) 88-SOURCE | www.artisantg.com

Artisan Technology Group

Artisan Technology Group is your source for quality new and certified-used/pre-owned equipment

- FAST SHIPPING AND DELIVERY
- TENS OF THOUSANDS OF IN-STOCK ITEMS
- EQUIPMENT DEMOS
- HUNDREDS OF MANUFACTURERS SUPPORTED
- LEASING/MONTHLY RENTALS
- ITAR CERTIFIED SECURE ASSET SOLUTIONS

SERVICE CENTER REPAIRS
Experienced engineers and technicians on staff at our full-service, in-house repair center

InstraView℠ REMOTE INSPECTION
Remotely inspect equipment before purchasing with our interactive website at ***www.instraview.com*** ↗

WE BUY USED EQUIPMENT
Sell your excess, underutilized, and idle used equipment
We also offer credit for buy-backs and trade-ins
www.artisantg.com/WeBuyEquipment ↗

LOOKING FOR MORE INFORMATION?
Visit us on the web at ***www.artisantg.com*** ↗ for more information on price quotations, drivers, technical specifications, manuals, and documentation

Contact us: (888) 88-SOURCE | sales@artisantg.com | www.artisantg.com