SJ series magnetic contactors and starters

Up to 4kW 440 Volts AC

■ Description

SJ type contactor adopts the operating magnet mechanism in which an electromagnet and a permanent magnet are combined, thus allowing the coil power consumption to be reduced.
The contactor can be operated directly by the DC output of programmable controller or electronic equipment.
Reversing contactor and starter are also available. SJ-1SG and SJ-1SWG types are applicable to three-phase motors of 220 Volts AC, 4.5kW which can be driven directly by semiconductor output.

SJ-0G

SJ-1SG

KKD06-102, 096

■ Features

- Low power consumption (0G, 06G: 1.4W, 1SG: 2.4W) as well as standard DC-operated models
- High contact reliability
  Provided with bifurcated auxiliary contacts, thus enabling to be inputted to the electronic circuit directly. They can be used in low level circuit of 5V, 3mA.
- Surge suppression
  Provided with a built-in surge suppression circuit, which suppresses the coil surge voltage to 50V or less and 60V or less (SJ-1SG only)
- Rail mounting
  Direct snap-on mounting on 35mm rails

■ Types number nomenclature

SJ – 0 W G RM / N L

Basic type

Frame size
0, 06, 1S

Special version
Blank: Standard type
A: Printed circuit board type
T: Tab terminal type

Blank: Magnetic contactor
W: Motor starter *1

Special version
L: With operating status indicator

Thermal overload relay
N3H: Standard type, 3-element
2E: With phase-loss protective device

Non-reversing or reversing
Blank: Non-reversing
RM: Reversing *2

Operating coil
G: DC operated

*1 Magnetic contactors (SJ- □ G) and thermal overload relays (TR- □ N) have actual type names on nameplates.

*2 Open type reversing magnetic contactors (SJ- □ GRM) and motor starters (SJ- □ WGRM) have no type name on their nameplates describing them as reversing types.

*3 UL and CSA approved is standard.

■ Version

Description			Type	Frame size 0	06	1S
Contactor	Without indicating lamp	Non reversing	SJ-□G	●	●	●
		Reversing	SJ-□GRM	●	●	●
	With indicating lamp	Non reversing	SJ-□G/L	–	●	–
		Reversing	SJ-□GRM/L	–	●	–
Starter	Without indicating lamp	Non reversing with OLR*	SJ-□WG/3H	–	–	●
		Non reversing with TR-0N/3Z716	SJ-□WG/N3H	●	●	–
		Non reversing with 2E OLR*	SJ-□WG/2E	●	●	●
		Reversing with OLR*	SJ-□WGRM/3H	–	–	●
		Reversing with TR-0N/3Z716	SJ-□WGRM/N3H	●	●	–
		Reversing with 2E OLR*	SJ-□WGRM/2E	●	●	●
	With indicating lamp	Non reversing with TR-0N/3Z716	SJ-□WG/N3HL	–	●	–
		Non reversing with 2E OLR*	SJ-□WG/2EL	–	●	–
		Reversing with TR-0N/3Z716	SJ-□WGRM/N3HL	–	●	–
		Reversing with 2E OLR*	SJ-□WGRM/2EL	–	●	–

Note: "OLR" means thermal overload relay

□: Frame size 0, 06, 15

■ Types and ratings (IEC 60947-4-1)

Motor capacity (kW) AC-3 3-phase		Operational current (A) AC-3 3-phase		Operational current (A) AC-1 *1	Thermal current (A)	Auxiliary contact		Non-reversing Open Type	Reversing Open Type
200V 240V	380V 440V	200V 240V	380V 440V			NO	NC		
3	2.2	12	6	15	15	1	–	SJ-0G	–
						–	1	SJ-0G	SJ-0GRM
3	2.2	12	6	15	15	2	1	SJ-06G	SJ-06GRM
						1	2	SJ-06G	SJ-06GRM
4.5	4	18	9	25	25	2	–	SJ-1SG	–
						1	1	SJ-1SG	SJ-1SGRM

■ Auxiliary contact ratings (IEC 60947-5-1)

Frame size	Rated thermal current (A)	Voltage (V AC)	Making & breaking capacity (A)	Rated operation current (A) Inductive AC-15	Rated operation current (A) Resistive AC-12	Min. operational voltage and current
0G	6	200-240	20	2	6	5V DC, 3mA
		380-440	20	1	6	
06G	6	200-240	20	2	6 (3) *1	5V DC, 3mA
		380-440	20	1	6 (3) *1	
1SG	10	200-240	33	3	8	5V DC, 3mA
		380-440	16.5	1.5	5	

*1 ( ) indicates the current for additional auxiliary contact.

■ Thermal overload relays

Thermal overload relay No. of element	Type	Contactor to be used	Setting current Range (A)		
3	TR-0N/3Z716	SJ-0G	0.1 - 0.15	0.46 - 0.72	2.8 - 4.2
	TK-0NZ716	SJ-06G	0.13 - 0.2	0.64 - 0.96	4 - 6
		SJ-06G/L	0.15 - 0.24	0.8 - 1.2	5 - 8
3	TR-5-1N/3	SJ-1SG	0.2 - 0.3	0.95 - 1.45	6 - 9
	TK-5-1N		0.24 - 0.36	1.4 - 2.2	7 - 11
			0.3 - 0.45	1.7 - 2.6	9 - 13*
			0.36 - 0.54	2.2 - 3.4	12 - 18*

Manual reset type is standard. Auto reset type is available on request.
Note: * For SJ-1SWG only.

■ Performance data

Basic type	Voltage (V AC)	Operating current (A)	Making and breaking current (A) Making	Breaking	Operating cycles per hour	Life expectancy (operations) Mechanical	Electrical
SJ-0G SJ-06G	220 440	12 6	120 60	96 48	1800	10 millions	1 millions
SJ-1SG	220 440	18 9	180 90	144 72	1800	10 millions	2 millions

■ Operating coil

Type	Voltage (V DC)	Power consumption (W)	Wiring
SJ-0G	12	1.4	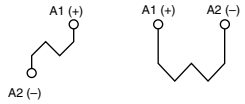
SJ-06G		1.4	
SJ-1SG	24	2.4	

SJ-0G, 06G SJ-1SG

Note: Operating voltage range
SJ-0G, 06G: 85-120% of rated voltage
SJ-1SG: 85-110% of rated voltage

■ Dimensions, mm
Magnetic contactor, open type

SJ-0G

Mass: 0.17kg

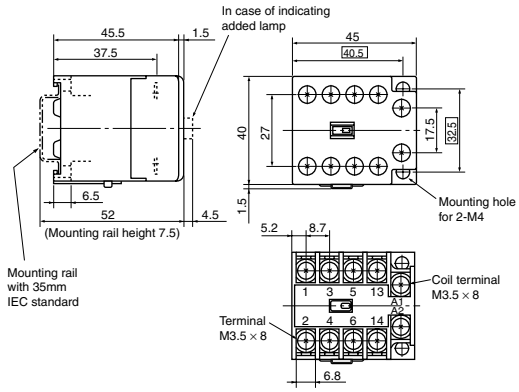

SJ-06G

Mass: 0.19kg

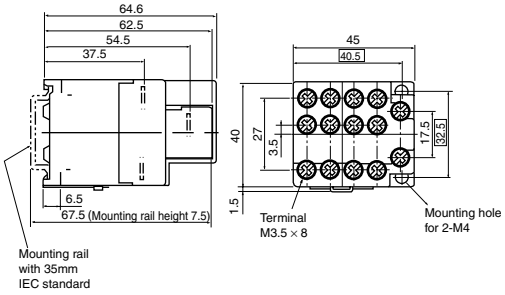

SJ-1SG

Mass: 0.5kg

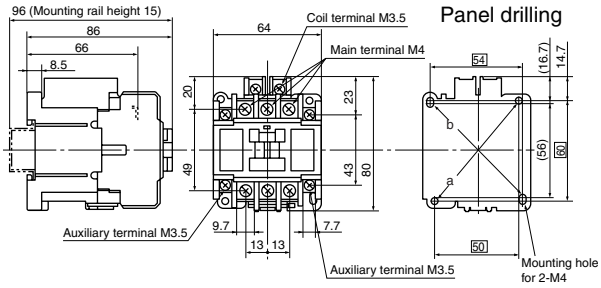

■ Wiring diagrams

SJ-0G

(Aux. contact)

1NO

1NC

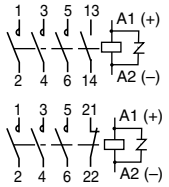

SJ-06G

3NO

2NO1NC

1NO2NC

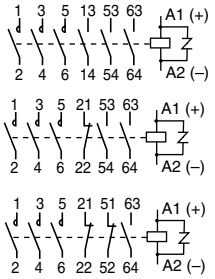

SJ-1SG

2NO

1NO1NC

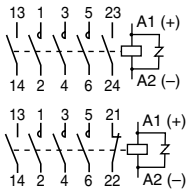

Note: • Use the two mounting holes on a diagonal line to mount a contactor.
Mounting holes indicated by a are compatible with those of SRC type.
Mounting holes indicated by b are compatible with IEC standard.

■ Dimensions, mm
Magnetic starter, open type

SJ-0WG/N3H, SJ-0WG/2E

Mass: 0.3kg

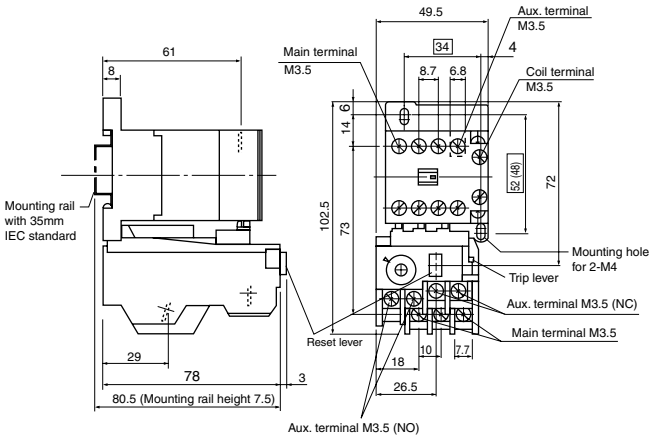

■ Wiring diagrams

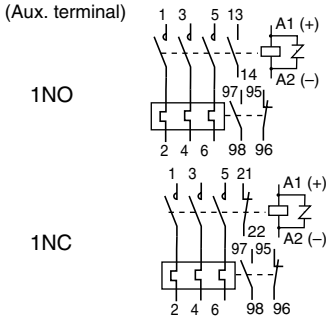

SJ-06WG/N3H, SJ-06WG/2E, SJ-06WG/N3HL, SJ-06WG/2EL

Mass: 0.32kg

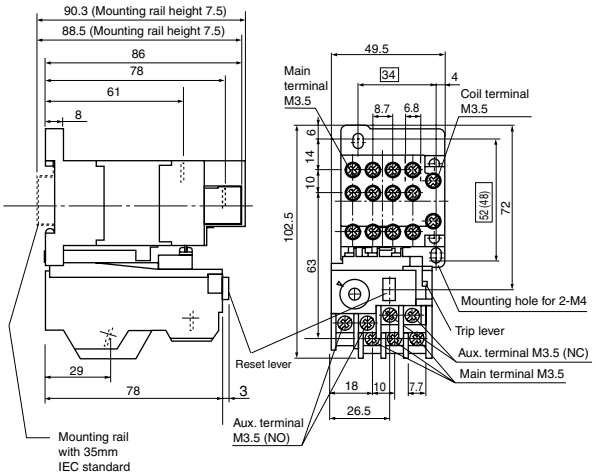

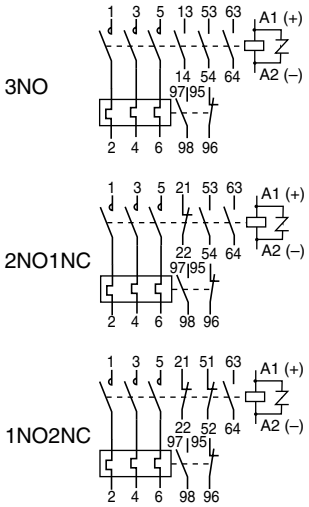

SJ-1SWG/3H, SJ-1SWG/2E

Mass: 0.62kg

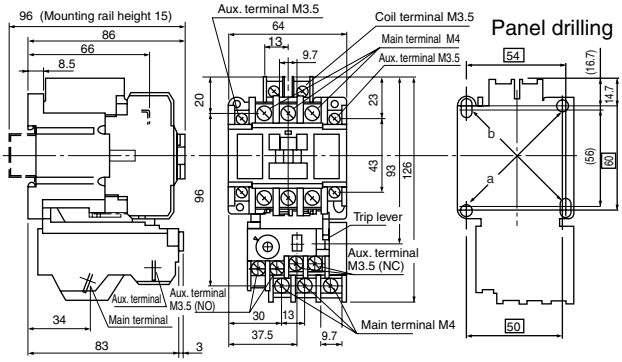

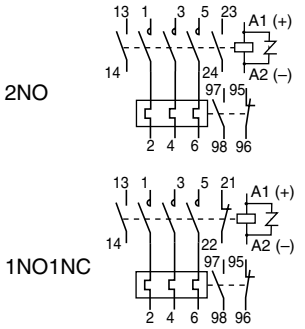

Note: • Use the two mounting holes on a diagonal line to mount a contactor.
Mounting holes indicated by a are compatible with those of SRC type.
Mounting holes indicated by b are compatible with IEC standard.