Artisan Technology Group

Artisan Technology Group is your source for quality new and certified-used/pre-owned equipment

- FAST SHIPPING AND DELIVERY
- TENS OF THOUSANDS OF IN-STOCK ITEMS
- EQUIPMENT DEMOS
- HUNDREDS OF MANUFACTURERS SUPPORTED
- LEASING/MONTHLY RENTALS
- ITAR CERTIFIED SECURE ASSET SOLUTIONS

SERVICE CENTER REPAIRS
Experienced engineers and technicians on staff at our full-service, in-house repair center

InstraView℠ REMOTE INSPECTION
Remotely inspect equipment before purchasing with our interactive website at ***www.instraview.com*** ↗

WE BUY USED EQUIPMENT
Sell your excess, underutilized, and idle used equipment
We also offer credit for buy-backs and trade-ins
www.artisantg.com/WeBuyEquipment ↗

LOOKING FOR MORE INFORMATION?
Visit us on the web at ***www.artisantg.com*** ↗ for more information on price quotations, drivers, technical specifications, manuals, and documentation

Contact us: (888) 88-SOURCE | sales@artisantg.com | www.artisantg.com

Differences between RCP-C and RCP2-C/CG

1 Changes to General Specifications

Item		RCP-C	RCP2-C/CG
Power-supply voltage		DC24V±10%	DC24V+10% / -15%
Current		2.5A or less	2A or less
Environment	Operating temperature	0~40ºC	0~40ºC
	Operating humidity	85%RH or below	85%RH or below (non-condensing)
	Operating environment	Free from corrosive gases	Free from corrosive gases.
	Storage environment	–	-10~65%
	Storage humidity	–	90%RH or below (non-condensing)
	Vibration resistance	–	10~57Hz in XYZ directions Single amplitude 0.035mm (continuous) 0.075mm (intermittent)
Protection class		(IP20 or equivalent)	IP 20
Weight		360g	300g or less
Number of positions		16	Up to 64
Storage device		EEPROM	EEPROM

2 Changes to Power Terminal Assignments and Emergency-Stop Input Specification

RCP-C

Symbol	Explanation
FG	A ground connection terminal
N	The ground side of the 24V power supply
24V	A 24VDC power supply
EMG	Both terminals are used to connect an emergency-stop switch.
EMG	(The controller is shipped with the EMG terminals shorted.)

RCP2-C

Symbol	Explanation
S1	Emergency-stop switch contacts: The emergency-stop switch on the teaching pendant is connected when the port switch is set to the ON side. S1 and S2 are shorted when the port switch is set the OFF side.
S2	
MPI	A motor drive-power cutoff terminal
MPO	
24V	The positive side of the 24V power supply
N	The negative side of the 24V power supply
FG	Ground connection

* RCP2-C
This controller has a built-in relay to cut off the motor drive power.
Do not open the MPI and MPO terminals that are shorted.
The emergency-stop signal is input to the EMG terminal.
* RCP2-CG
The MPI/MIO terminals are provided to allow ON/OFF of the motor drive power externally when a safety circuit is constructed by the user.
* S1, S2
S1 and S2 are contact outputs for the emergency-stop pushbutton switch provided on the teaching pendant.
(Incorporate S1 and S2 in your safety circuit.)
* If the controller has a built-in relay, FG becomes EMG, meaning that it serves as an emergency-stop signal input terminal.

3 Changes to PIO Interface

RCP-C

Pin No.	Category	Signal		Color
1	P24	+24V	Connect this signal to the 24V power supply.	Brown-1
2	N	0V	Connect this signal to the 0V power supply.	Red-1
3	Input	Start	This signal is used to input a movement start command.	Orange-1
4		Command position 1	These signals are used input the position number to be selected.	Yellow-1
5		Command position 2		Green-1
6		Command position 4		Blue-1
7		Command position 8		Purple-1
8		Not used	Do not connect this signal.	Gray-1
9				White-1
10		*Pause	This signal is used to temporarily stop the moving actuator.	Black-1
11				Brown-2
12		Not used	Do not connect this signal.	Red-2
13				Orange-2
14				Yellow-2
15				Green-2
16	Output	Completed position 1	These signals are used to output the position number upon completion of positioning. When an alarm occurs, these signals output the corresponding alarm number.	Blue-2
17		Completed position 2		Purple-2
18		Completed position 4		Gray-2
19		Completed position 8		White-2
20		Positioning completion	This signal is output when positioning is completed.	Black-2
21		Home return completion	This signal is output when home return is completed.	Brown-3
22		Zone	This signal is output when the actuator enters the range set by the parameter.	Red-3
23		*Alarm	This signal is output when the controller is abnormal.	Orange-3
24		*Emergency stop	This signal is output when an emergency stop is actuated	Yellow-3
25	Not used		Do not connect this signal.	Green-3
26				Blue-3

RCP2-C

Same setting as the conventional RCP (Factory setting)

Pin No.			Parameter (The function varies depending on the IOPN)					
Pin No.	Category	Signal	0	1	2	3	4	5
1A	P24	24V						
2A	N	0V						
3A	Input	IN00	CSTR	PC1	PC1	PC1	PC1	ST0
4A		IN01	PC1	PC2	PC2	PC2	PC2	ST1
5A		IN02	PC2	PC4	PC4	PC4	PC4	ST2
6A		IN03	PC4	PC8	PC8	PC8	PC8	ST3
7A		IN04	PC8	–	PC16	–	MODE	–
8A		IN05	–	*STP	PC32	*STP	*STP/JOG	*STP
9A		IN06	–	CSTR	CSTR	CSTR	CSTR/PWRT	–
10A		IN07	*STP	HOME	HOME	HOME	HOME	–
11A		IN08	–	SON	*STP	SON	SON	–
12A		IN09	–	RES	RES	RES	RES/JOG-	RES
13A			(Reserved)					
1B			(Reserved)					
2B			(Reserved)					
3B	Output	OUT00	PM1	PM1	PM1	PM1	PM1	PE0
4B		OUT01	PM2	PM2	PM2	PM2	PM2	PE1
5B		OUT02	PM4	PM4	PM4	PM4	PM4	PE2
6B		OUT03	PM8	PM8	PM8	PM8	PM8	PE3
7B		OUT04	PEND	ZONE	PM16	ZONE1	MODES	ZONE1
8B		OUT05	HEND	MOVE	PM32	ZONE2	MOVE	–
9B		OUT06	ZONE	PEND	PEND	PEND	PEND/WEND	PEND
10B		OUT07	*ALM	HEND	HEND	HEND	HEND	HEND
11B		*EMGS	(Reserved: Emergency-stop status)					
12B	Output	OUT08	–	SRDY	RUN	SRDY	SRDY	–
13B		OUT09	–	*ALM	*ALM	*ALM	*ALM	*ALM

* The RCP2 controller can be used with one of five PIO interface patterns selected by setting the applicable parameter accordingly.
The PIO interface corresponding to the parameter setting "0" is exactly the same as the PIO interface of the RCP controller. Since the connector shape is also the same, you can swap your current RCP controller with a RCP2 controller without changing any settings, if PIO pattern "0" will be selected for the RCP2 controller. (There is no need to reassign PIOs.)

Artisan Technology Group - Quality Instrumentation ... Guaranteed | (888) 88-SOURCE | www.artisantg.com

4 Changes to Controller Dimensions/Installation Dimensions

RCP-C

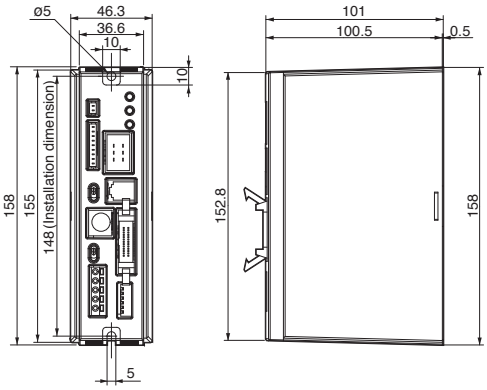

RCP2-C

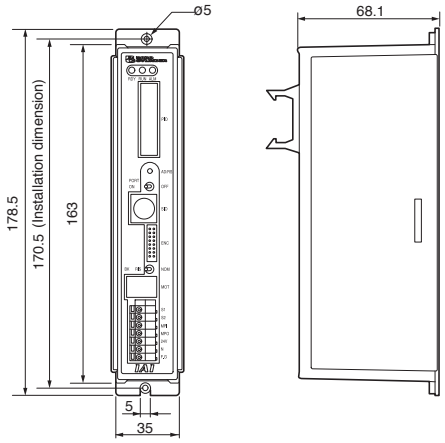

5 Other Changes

1. Emergency-stop specification
   - All RCP controllers are equipped with a built-in emergency stop relay.
   - The RCP2 series includes controllers equipped with a built-in emergency-stop relay, just like the conventional RCP series, and those not equipped with a built-in emergency-stop relay (global specification). RCP2 controllers without a built-in relay are designed to operate with a safety circuit (safety category 2) provided externally to the controller. The user must provide this safety circuit to cut off the motor drive power.

2. CE mark
   - The RCP series includes CE-certified controllers for use in EU countries.
   - Among the RCP2 series, the global specification type (RCP2-CG) is scheduled to receive a CE certification.

3. Controller link specification
   - The method to link controllers is different between the RCP and RCP2 series. Refer to the operating manual for details.

4. Compatibility of PC software and teaching pendants
   - With the necessary version upgrade, the PC software for RCP can be used with RCP2 controllers.
   - The teaching pendants for RCP are also compatible with the RCP2 series after the necessary upgrade.

5. User parameters
   - The user parameters have been changed for the RCP2 series. Refer to the operating manual for details.

Artisan Technology Group

Artisan Technology Group is your source for quality new and certified-used/pre-owned equipment

- FAST SHIPPING AND DELIVERY
- TENS OF THOUSANDS OF IN-STOCK ITEMS
- EQUIPMENT DEMOS
- HUNDREDS OF MANUFACTURERS SUPPORTED
- LEASING/MONTHLY RENTALS
- ITAR CERTIFIED SECURE ASSET SOLUTIONS

SERVICE CENTER REPAIRS
Experienced engineers and technicians on staff at our full-service, in-house repair center

InstraView℠ REMOTE INSPECTION
Remotely inspect equipment before purchasing with our interactive website at ***www.instraview.com*** ↗

WE BUY USED EQUIPMENT
Sell your excess, underutilized, and idle used equipment
We also offer credit for buy-backs and trade-ins
www.artisantg.com/WeBuyEquipment ↗

LOOKING FOR MORE INFORMATION?
Visit us on the web at ***www.artisantg.com*** ↗ for more information on price quotations, drivers, technical specifications, manuals, and documentation

Contact us: (888) 88-SOURCE | sales@artisantg.com | www.artisantg.com