Artisan Technology Group

Artisan Technology Group is your source for quality new and certified-used/pre-owned equipment

- FAST SHIPPING AND DELIVERY
- TENS OF THOUSANDS OF IN-STOCK ITEMS
- EQUIPMENT DEMOS
- HUNDREDS OF MANUFACTURERS SUPPORTED
- LEASING/MONTHLY RENTALS
- ITAR CERTIFIED SECURE ASSET SOLUTIONS

SERVICE CENTER REPAIRS
Experienced engineers and technicians on staff at our full-service, in-house repair center

InstraView℠ REMOTE INSPECTION
Remotely inspect equipment before purchasing with our interactive website at ***www.instraview.com*** ↗

WE BUY USED EQUIPMENT
Sell your excess, underutilized, and idle used equipment
We also offer credit for buy-backs and trade-ins
www.artisantg.com/WeBuyEquipment ↗

LOOKING FOR MORE INFORMATION?
Visit us on the web at ***www.artisantg.com*** ↗ for more information on price quotations, drivers, technical specifications, manuals, and documentation

Contact us: (888) 88-SOURCE | sales@artisantg.com | www.artisantg.com

4515/4525/4575
PMC ATM Adapter
Users Guide

Artisan Technology Group - Quality Instrumentation ... Guaranteed | (888) 88-SOURCE | www.artisantg.com

4515/4525/4575
PMC ATM Adapter
Users Guide

Document No. UG04575-000, REVA

Release Date: August 13, 1997

Artisan Technology Group - Quality Instrumentation ... Guaranteed | (888) 88-SOURCE | www.artisantg.com

Artisan Technology Group - Quality Instrumentation ... Guaranteed | (888) 88-SOURCE | www.artisantg.com

Copyright Notice

© 1997 by Interphase Corporation. All rights reserved.

Printed in the United States of America, 1997.

This manual is licensed by Interphase to the user for internal use only and is protected by copyright. The user is authorized to download and print a copy of this manual if the user has purchased one or more of the Interphase adapters described herein. All copies of this manual shall include the copyright notice contained herein. No part of this manual, whether modified or not, may be incorporated into user's documentation without prior written approval of

Interphase Corporation
13800 Senlac
Dallas, Texas 75234

Phone: (214) 654-5000
Fax: (214) 654-5500

Disclaimer

Information in this manual supersedes any preliminary specifications, preliminary data sheets, and prior versions of this manual. While every effort has been made to ensure the accuracy of this manual, Interphase Corporation assumes no liability resulting from omissions, or from the use of information obtained from this manual. Interphase Corporation reserves the right to revise this manual without obligation to notify any person of such revision. Information available after the printing of this manual will be in one or more Read Me First documents. Each product shipment includes all current Read Me First documents. All current Read Me First documents are also available on our web site.

THIS MANUAL IS PROVIDED "AS IS." INTERPHASE DISCLAIMS ALL WARRANTIES, EXPRESS OR IMPLIED, INCLUDING THOSE OF MERCHANTABILITY AND FITNESS FOR A PARTICULAR PURPOSE OR ARISING FROM A COURSE OF DEALING, USAGE, OR TRADE PRACTICE.

IN NO EVENT SHALL INTERPHASE BE LIABLE FOR ANY INDIRECT, SPECIAL, CONSEQUENTIAL, OR INCIDENTAL DAMAGES, INCLUDING, WITHOUT LIMITATION, LOST PROFITS OR LOSS OR DAMAGE TO DATA ARISING OUT OF THE USE OR INABILITY TO USE THIS MANUAL, EVEN IF ADVISED OF THE POSSIBILITY OF SUCH DAMAGES.

Trademark Acknowledgments

Interphase® and Syncard® are registered trademarks and CellView™, (i)chip™, ADSLWatch™, ADSLEye™, SynWatch™, SynEye™, and FibreView™ are trademarks of Interphase Corporation.

Microsoft®, MS-DOS®, Windows®, and Windows NT® are registered trademarks of Microsoft Corp.

Novell® and NetWare® are registered trademarks of Novell, Inc.

Solaris® and NFS® are registered trademarks and SunOS™ and ONC™ are trademarks of Sun Microsystems, Inc. Sun is a trademark or registered trademark of Sun Microsystems, Inc.

Artisan Technology Group - Quality Instrumentation ... Guaranteed | (888) 88-SOURCE | www.artisantg.com

SPARC® is a registered trademark of SPARC International, Inc. SPARCstation™ and UltraSPARC™ are trademarks of SPARC International, Inc., licensed exclusively to Sun Microsystems, Inc.

LattisCell™, EtherCell™, Bay Networks™, and SAHI™ are trademarks of Bay Networks, Inc.

UNIX® is a registered trademark in the United States and other countries, licensed exclusively through X/Open Company Ltd.

IBM® and OS/2® are registered trademarks and AIX™ and PowerPC™ are trademarks of International Business Machines Corporation.

HP-UX® is a registered trademark and Tachyon™ and Precision Bus™ are trademarks of Hewlett-Packard Company.

Intel® and Pentium® are registered trademarks of Intel Corporation.

TI® is a registered trademark of Texas Instruments.

Compu-shield® is a registered trademark of Stewart Connectors Systems, Inc.

Tundra® is a registered trademark and Universe™ is a trademark of Tundra Semiconductor Corporation.

Ethernet® is a registered trademark of Xerox Corporation.

DG/UX® and AViiON® are registered trademarks of Data General Corporation.

Apple® and Power Macintosh® are registered trademarks and Macintosh™, MacOS™, Mac™, and AppleTalk™ are trademarks of Apple Computer, Inc.

NCR® is a registered trademark of NCR Corporation.

Silicon Graphics® is a registered trademark and SGI™, Indigo™, Indy™, Indigo^2™, IRIX™, IRIS™, IRIS Indigo™, Challenge™, and Challenge M™ are trademarks of Silicon Graphics, Inc.

ALPHA™ is a trademark of Digital Equipment Corporation.

Gadzoox™ is a trademark of Gadzoox Microsystems, Inc.

Seagate™ and Barracuda™ are trademarks of Seagate Technology, Inc.

ST® is a registered trademark of AT&T.

SCO, The Santa Cruz Operation, SCO OpenServer, and UnixWare are trademarks or registered trademarks of The Santa Cruz Operation, Inc.

SUPERNET™ is a trademark of Advanced Micro Devices, Inc.

Cisco® is a registered trademark and Cisco Systems™ is a trademark of Cisco Systems, Inc.

Adobe® and Acrobat® are registered trademarks of Adobe Systems Incorporated.

CompactPCI™ is a trademark of the PCI Industrial Computer Manufacturers Group.

Artisan Technology Group - Quality Instrumentation ... Guaranteed | (888) 88-SOURCE | www.artisantg.com

Assistance

Product Purchased from Reseller

Contact the reseller or distributor if

- You need ordering, service or any technical assistance.
- You received a damaged, incomplete or incorrect product.

Product Purchased Directly from Interphase Corporation

Contact Interphase Corporation directly for assistance with this, or any other Interphase Corporation product. Please have your purchase order and serial numbers ready.

Customer Support

United States:	Telephone:	(214) 654-5555
	Fax:	(214) 654-5500
	E-Mail:	intouch@iphase.com
United Kingdom:	Telephone:	+ 44 (0) 1869-321222
	Fax:	+ 44 (0) 1869-247720
France:	Telephone:	+ 33 (0) 1 41 15 44 00
	Fax:	+ 33 (0) 1 41 15 12 13
Asia/Pacific Rim:	Telephone:	+ 81 35423 6513
	Fax:	+ 81 3 5423 6511

World Wide Web

http://www.iphase.com

Anonymous FTP Server

ftp.iphase.com

Safety Precautions

The following general safety precautions must be observed during all phases of operation of this equipment. Failure to comply with these precautions or with specific warnings elsewhere in this manual violates safety standards of design, manufacture, and intended use of the equipment. Interphase Corporation assumes no liability for the user's failure to comply with these requirements. You, as the user of the

Artisan Technology Group - Quality Instrumentation ... Guaranteed | (888) 88-SOURCE | www.artisantg.com

product, must observe all stated warnings and safety precautions in order to safely operate the equipment in your environment.

Do Not Substitute Parts or Modify Equipment

Because of the danger of introducing additional hazards, do not install substitute parts or perform any unauthorized modification of the equipment. Contact your local Interphase representative for service and repair to ensure that safety features are maintained.

Ground the Instrument

To minimize shock hazard, the equipment chassis and enclosure must be connected to an electrical ground. The power cable must either be plugged into an approved three-contact electrical outlet or used with a three-contact to two-contact adapter, with the grounding wire (green) firmly connected to an electrical ground (safety ground) at the power outlet.

Do Not Operate in an Explosive Atmosphere

Do not operate the equipment in the presence of flammable gases or fumes. Operation of any electrical equipment in such an environment constitutes a definite safety hazard.

Keep away from Live Circuits

Do not install or replace the component with power cable connected. Under certain conditions, dangerous voltages may exist even with the power cable removed. To avoid injuries, always disconnect power and discharge circuits before touching them.

Observe Dangerous Procedure Warnings

Warnings precede potentially dangerous procedures throughout this manual. Instructions contained in the warnings must be followed. You should also employ all other safety precautions which you deem necessary for the operation of the equipment in your operating environment.

Artisan Technology Group - Quality Instrumentation ... Guaranteed | (888) 88-SOURCE | www.artisantg.com

WARNING

This equipment generates, uses, and can radiate electromagnetic energy. It may cause or be susceptible to electromagnetic interference (EMI) if not installed and used in a cabinet with adequate EMI protection.

Artisan Technology Group - Quality Instrumentation ... Guaranteed | (888) 88-SOURCE | www.artisantg.com

4515/4525 FCC Regulatory Compliance

This equipment has been tested and found to comply with the limits for a Class A digital device, pursuant to part 15 of the FCC Rules. These limits are designed to provide reasonable protection against harmful interference when the equipment is operated in a commercial environment. This equipment generates, uses, and can radiate radio frequency energy and, if not installed and used in accordance with the instruction manual, may cause harmful interference to radio communications. Operation of this equipment in a residential area is likely to cause harmful interference in which case the user will be required to correct the interference at his own expense.

Artisan Technology Group - Quality Instrumentation ... Guaranteed | (888) 88-SOURCE | www.artisantg.com

4515X/4575 FCC Regulatory Compliance

Tested To Comply With FCC Standards

This device complies with Part 15 of the FCC Rules. Operation is subject to the following two conditions:

- This device may not cause harmful interference.
- This device must accept any interference received, including interference that may cause undesired operation.

Radio Frequency Interference Statement

This equipment has been tested and found to comply with the limits for a Class B digital device, pursuant to Part 15, Subpart B of the FCC Rules. This equipment generates, uses, and can radiate radio frequency energy. If not installed and used in accordance with the instructions, it may cause interference to radio communications.

The limits are designed to provide reasonable protection against such interference in a residential situation. However, there is no guarantee that interference will not occur in a particular installation. If this equipment does cause interference to radio or television reception, which can be determined by turning the equipment on and off, the user is encouraged to try to correct the interference by one or more of the following measures:

- Reorient or relocate the receiving antenna of the affected radio or television.
- Increase the separation between the equipment and the affected receiver.
- Connect the equipment and the affected receiver to power outlets on separate circuits.
- Consult the radio/TV dealer or an experienced radio/TV technician for help.

Modifications

Changes or modifications not expressly approved by Interphase Corporation could void the user's authority to operate the equipment.

Artisan Technology Group - Quality Instrumentation ... Guaranteed | (888) 88-SOURCE | www.artisantg.com

Interphase Fiber Products' Compliance

All Interphase fiber products comply with IEC regulations 825-1 and 825-2 for Class 1 laser devices.

Artisan Technology Group - Quality Instrumentation ... Guaranteed | (888) 88-SOURCE | www.artisantg.com

Declaration of Conformity

(according to ISO/IEC Guide 22 and EN 45014)

Manufacturer's Name:	Interphase Corporation
Manufacturer's Address and Phone Number:	13800 Senlac Dallas, Texas 75234 U.S.A. 214/654-5000

declares, that the product:

Product Name: PMC ATM FIBER

Model Number: 4515

conforms to the following Standards:

Safety: EN 60950:1988 + A1, A2

Supplementary Information:

This product complies with the requirements of the **Low Voltage Directive 73/23/EEC**.

Dallas, June 23, 1995

Mike Jobe, Quality Manager

European Contact:

Interphase International
Astral House, Granville Way, Bicester, Oxon, England OX6 0JT
Phone: +44 (0) 1869-321222; Fax:+44 (0) 1869-247720

Artisan Technology Group - Quality Instrumentation ... Guaranteed | (888) 88-SOURCE | www.artisantg.com

Declaration of Conformity

(according to ISO/IEC Guide 22 and EN 45014)

Manufacturer's Name:	Interphase Corporation
Manufacturer's Address and Phone Number:	13800 Senlac Dallas, Texas 75234 U.S.A. 214/654-5000

declares, that the product:

Product Name: PMC ATM IChip Fiber

Model Number: 4515X-0-B

conforms to the following Standards:

Safety:	EN 60950:1988 + A1, A2 IEC 825 -1 & -2 1993
EMC:	EN 55022:1988 class B EN 50082-1 Part 1 1992

Supplementary Information:

This product complies with the requirements of the **Low Voltage Directive 73/23/EEC** and the **EMC directive 89/336/EEC**.

Dallas, March 18, 1997

Mike Jobe, Quality Manager

European Contact:

Interphase International
Astral House, Granville Way, Bicester, Oxon, England OX6 0JT
Phone: +44 (0) 1869-321222; Fax:+44 (0) 1869-247720

Artisan Technology Group - Quality Instrumentation ... Guaranteed | (888) 88-SOURCE | www.artisantg.com

Declaration of Conformity

(according to ISO/IEC Guide 22 and EN 45014)

Manufacturer's Name:	Interphase Corporation
Manufacturer's Address and Phone Number:	13800 Senlac Dallas, Texas 75234 U.S.A. 214/654-5000

declares, that the product:

Product Name: PMC ATM ICHIP+ Fiber

Model Number: 4575-0-B

conforms to the following Standards:

Safety:	EN60950:1988 + A1, A2 IEC 825-1 & -2 1993
EMC:	EN55022: 1988 class B EN50082-1 Part 1 1992

Supplementary Information:

This product complies with the requirements of the **Low Voltage Directive 73/23/EEC** and the **EMC directive 89/336/EEC**.

Dallas, July 22, 1997

Mike Jobe, Quality Manager

European Contact:

Interphase International
Astral House, Granville Way, Bicester, Oxon, England OX6 0JT
Phone: +44 (0) 1869-321222; Fax:+44 (0) 1869-247720

Artisan Technology Group - Quality Instrumentation ... Guaranteed | (888) 88-SOURCE | www.artisantg.com

Declaration of Conformity

(according to ISO/IEC Guide 22 and EN 45014)

Manufacturer's Name:	Interphase Corporation
Manufacturer's Address and Phone Number:	13800 Senlac Dallas, Texas 75234 U.S.A. 214/654-5000

declares, that the product:

Product Name: PMC ATM ICHIP+ UTP

Model Number: 4575-0-B

conforms to the following Standards:

Safety:	EN60950:1988 + A1, A2
EMC:	EN55022:1988 class B EN50082-1 Part 1 1992

Supplementary Information:

This product complies with the requirements of the **Low Voltage Directive 73/23/EEC** and the **EMC directive 89/336/EEC**.

Dallas, July 9, 1997

Mike Jobe, Quality Manager

European Contact:

Interphase International
Astral House, Granville Way, Bicester, Oxon, England OX6 0JT
Phone: +44 (0) 1869-321222; Fax:+44 (0) 1869-247720

Artisan Technology Group - Quality Instrumentation ... Guaranteed | (888) 88-SOURCE | www.artisantg.com

Contents

Preface v

Icon Conventions v
Text Conventions vi

CHAPTER 1 Introduction

Adapter Overview 1
Product Features 2
System Requirements 2

CHAPTER 2 Installation

Overview 3
Inspecting the Adapter 3
Installing the Adapter 4
Connecting to the Network 6

CHAPTER 3 Troubleshooting

LED States and Meanings 9
Problems and Possible Solutions 10

APPENDIX A Specifications

4515/4525/4575 Specifications 13

APPENDIX B Cabling

Straight-Through Cable 15
Crossover Cable 15

Artisan Technology Group - Quality Instrumentation ... Guaranteed | (888) 88-SOURCE | www.artisantg.com

APPENDIX C ATM Technology Overview

Introduction to ATM 17
Virtual Circuits 18
Virtual Circuit Connections 18
Permanent Virtual Circuits 19
Switched Virtual Circuits 20
Fixed-Length Cells 21
Scalability 22
ATM Layers 22
Physical Layer 23
ATM Layer 24
ATM Adaptation Layer 24
SONET/SDH 27
Integrated Local Management Interface 27
LAN Emulation 28
LAN Emulation Services 31
LAN Emulation Configuration Server 31
LAN Emulation Server 32
Broadcast and Unknown Server 33
LAN Emulation Protocol 33
1. Initialization 33
2. Configuration 34
3. Joining 34
4. Registration and BUS Initialization 34
5. Data Movement 35
LAN Applications 35
For More Information 36

APPENDIX D PCI/PMC Technology Overview

PCI/PMC Technology 37

Glossary 39

Artisan Technology Group - Quality Instrumentation ... Guaranteed | (888) 88-SOURCE | www.artisantg.com

Index.....53

Artisan Technology Group - Quality Instrumentation ... Guaranteed | (888) 88-SOURCE | www.artisantg.com

Artisan Technology Group - Quality Instrumentation ... Guaranteed | (888) 88-SOURCE | www.artisantg.com

Preface

Icon Conventions

Icons draw your attention to especially important information:

NOTE

The Note icon indicates important points of interest related to the current subject.

CAUTION

The Caution icon brings to your attention those items or steps that, if not properly followed, could cause problems in your machine's configuration or operating system.

WARNING

The Warning icon alerts you to steps or procedures that could be hazardous to your health, cause permanent damage to the equipment, or impose unpredictable results on the surrounding environment.

Artisan Technology Group - Quality Instrumentation ... Guaranteed | (888) 88-SOURCE | www.artisantg.com

Text Conventions

The following conventions are used in this manual. Computer-generated text is shown in typewriter font. Examples of computer-generated text are: program output (such as the screen display during the software installation procedure), commands, directory names, file names, variables, prompts, and sections of program code.

```
Computer-generated text example
```

Commands to be entered by the user are printed in **`bold Courier`** type. For example:

```
cd /usr/tmp
```

Pressing the return key (↵ **`Return`**) at the end of the command line entry is assumed, when not explicitly shown. For example:

```
/bin/su
```

is the same as:

```
/bin/su  ↵ Return
```

Required user input, when mixed with program output, is printed in **`bold Courier`** type. References to UNIX programs and manual page entries follow the standard UNIX conventions.

When a user command, system prompt, or system response is too long to fit on a single line, it will be shown as

```
Do you want the new kernel moved into
\ vmunix?[y]
```

with a backslash at either the beginning of the continued line or at the end of the previous line.

Artisan Technology Group - Quality Instrumentation ... Guaranteed | (888) 88-SOURCE | www.artisantg.com

Introduction 1

Adapter Overview

There are two types of PMC ATM adapters from Interphase. The 4515 and the 4575 adapters support a data rate of 155 Mbps, and the 4525 Adapter supports a data rate of 25 Mbps. All boards adhere to the PMC (PCI Mezzanine Card) mechanical layout for use in mezzanine systems, such as many of the VME CPU boards, and conform to PMC P1386.1 Draft 2.0. All boards are based on the Interphase (i)chip™ SAR technology which provides a full range of ATM network communications. The 4575 has the (i)chip™SAR+ which includes hardware-based ABR in compliance with the ATM Forum Traffic Management 4.0 specification.

Most of the examples and diagrams in this manual refer to the 4575 adapter. This information applies equally to the 4515 and the 4525 except where noted. There are a few differences among the 155Mb and the 25Mb products:

Product	Data Rate	Interface	Connections
4515	155 Mbps	SONET OC-3c Fiber SONET UTP	SC Duplex, Single-mode SC Duplex, Multimode Slim-line, UTP Cat 5
4525	25.6 Mbps	AF-PHY-0040.00 UTP	Slim-line, UTP Cat 3, 4, or 5
4575	155 Mbps	SONET OC-3c Fiber SONET UTP	SC Duplex, Multimode Slim-line, UTP Cat 5

Artisan Technology Group - Quality Instrumentation ... Guaranteed | (888) 88-SOURCE | www.artisantg.com

Product Features

- PMC P1386.1 Draft 2.0 compliant
- 155 Mbps SONET OC-3c over single-mode or multimode fiber
- 155 Mbps SONET over UTP copper
- 25.6 Mbps AF-PHY-0040.00 over UTP copper
- 128K standard buffer memory
- AAL5 ATM Adaptation Layer
- Dual function memory management for Cell-FIFO or on-board packet reassembly
- Hardware-based Segmentation and Reassembly (SAR) functions
- LED displays for board status and network link
- 32-bit, zero wait-state PCI DMA master
- Up to 128-byte burst transfers for the 4575 and up to 64 bytes for the 4515 and the 4525

System Requirements

The PMC ATM adapters require a mezzanine expansion slot in the host machine. If the UTP copper version of the adapter is being installed, the interface to the network requires a Compu-shield® compatible connector or an RJ-45 converter harness as shown in Figure 2-3 on page 8.

Artisan Technology Group - Quality Instrumentation ... Guaranteed | (888) 88-SOURCE | www.artisantg.com

Installation 2

Overview

The PMC ATM adapter is designed to be installed in PCI mezzanine expansion slots. This chapter explains how to install the adapter, including

- Inspecting the adapter
- Installing the adapter in a host mezzanine slot
- Connecting the adapter to the network

The only tools required are a grounding strap and a #1 Phillips screwdriver. For specification information, see *Specifications* on page 13.

Inspecting the Adapter

Before installing the adapter in your computer, you need to visually inspect it for damage that might have occurred during shipment. The adapter is packed in an antistatic bag to protect it during shipment. Keep the adapter in its protective bag until you are ready to install it in the host computer.

CAUTION

To prevent damage to the adapter due to electrostatic discharge, wear a grounding strap and handle the adapter only by its edges. Do not touch its components or any metal parts other than the faceplate.

Artisan Technology Group - Quality Instrumentation ... Guaranteed | (888) 88-SOURCE | www.artisantg.com

1. Open the shipping container and carefully remove its contents.
2. Inspect each item for damage. If you find any omissions or damage, contact your network supplier and the carrier (for example, UPS or Federal Express) that delivered the package.

Installing the Adapter

WARNING

Your computer operates at voltages that can be lethal. Before you remove the computer cover, carefully review the following procedures and observe all cautions and warnings to protect yourself and to prevent damage to the system. Use only insulated or nonconductive tools

To install the adapter in a host machine, attach a grounding strap to your wrist or ankle and do the following:

1. With power disconnected, gain access to the mezzanine location on the motherboard.
2. If the motherboard is easily removed, as in most VME-based systems, remove it from the chassis.
3. Remove the blank cover from the aperture of the mezzanine expansion slot.
4. Carefully remove the adapter from its antistatic bag.

Artisan Technology Group - Quality Instrumentation ... Guaranteed | (888) 88-SOURCE | www.artisantg.com

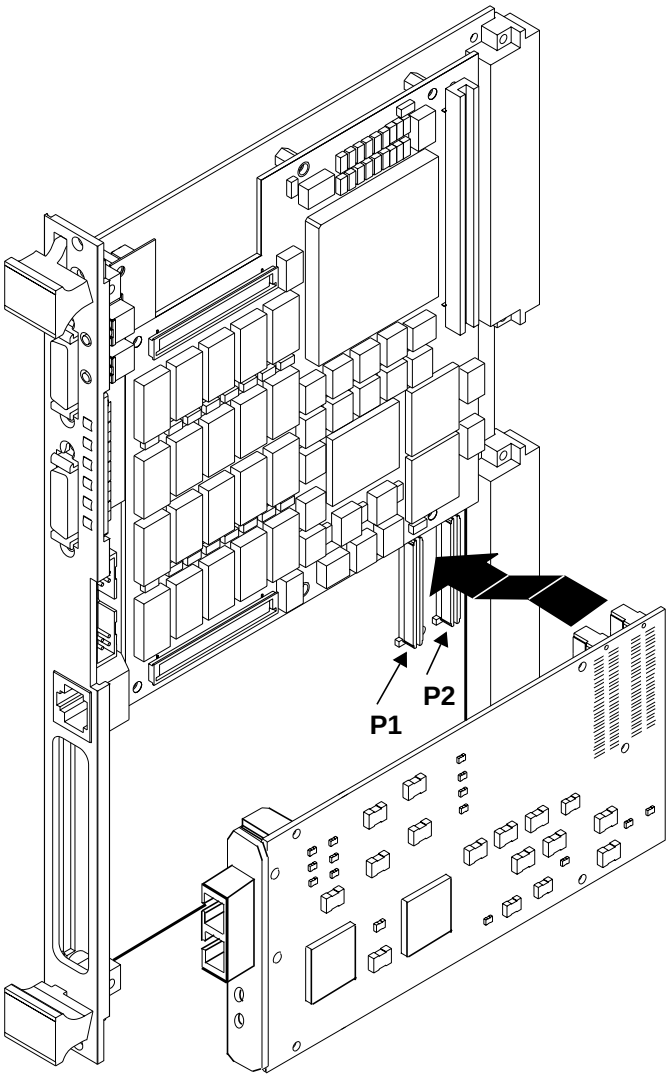

Figure 2-1. Installing a PMC ATM Adapter

Artisan Technology Group - Quality Instrumentation ... Guaranteed | (888) 88-SOURCE | www.artisantg.com

5. Hold the adapter at an angle and insert the card through the rear of the faceplate of the motherboard while aligning the dual mating connectors on the motherboard to the connectors (P1 and P2) on the adapter card.

   Figure 2-1 on page 5 illustrates the installation of a PMC adapter in a VME style motherboard.

6. Align the standoff post on the motherboard with the matching hole in the adapter and carefully press the adapter into place.

7. Fasten the cards together with screws.

8. Reinstall all parts removed in earlier steps.

Continue the installation with the procedures in the next section.

Connecting to the Network

With the adapter installed to the chassis as discussed in the previous section, you are now ready to connect the adapter to the network. Table 2-1 contains a list of the cables and connectors required for each adapter.

Table 2-1. Connectors for the PMC ATM Adapter

Adapter	Connector	Medium	Configuration
155 Mbps	SC Duplex	Single-mode fiber	8.5/125 micron

Artisan Technology Group - Quality Instrumentation ... Guaranteed | (888) 88-SOURCE | www.artisantg.com

Table 2-1. Connectors for the PMC ATM Adapter

Adapter	Connector	Medium	Configuration
155 Mbps	SC Duplex	Multimode fiber	62.5/125 micron
155 Mbps	Compu-shield*	Cat 5 copper	UTP
25.6 Mbps	Compu-shield*	Cat 3, 4 or 5 copper	UTP
* Series 31 available from Stewart Connector Systems, Inc.			

To attach the adapter to the network, do the following:

1. Attach the appropriate network connector to the PMC ATM adapter.

   For ATM over fiber, the SC Duplex connection is shown in Figure 2-2.

   For UTP, a Compu-shield Series 31 connector is used to attach the adapter to the network, as shown in Figure 2-3 on page 8.

2. Turn on the power to the host computer.

Installation of the PMC ATM adapter is complete.

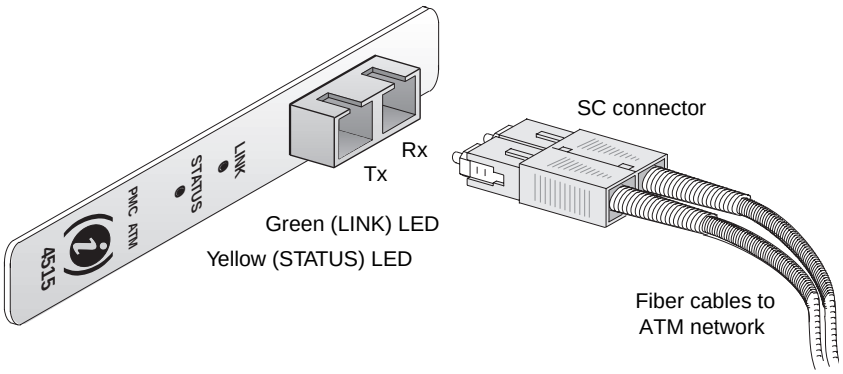

Figure 2-2. SC Duplex Connection

Artisan Technology Group - Quality Instrumentation ... Guaranteed | (888) 88-SOURCE | www.artisantg.com

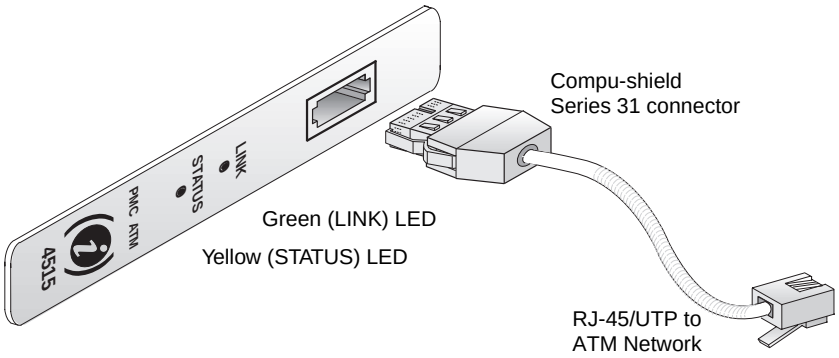

Figure 2-3. Compu-shield UTP Connection

Artisan Technology Group - Quality Instrumentation ... Guaranteed | (888) 88-SOURCE | www.artisantg.com

Troubleshooting 3

This chapter provides possible solutions for problems encountered while installing and operating the PMC ATM adapters. If the information in this chapter does not resolve the problem you are experiencing, see the assistance information at the front of this manual.

LED States and Meanings

The meanings of the LEDs located on the adapters' faceplates are:

LED	State	Meaning
Status	Off	The board does not have power.
Status	Solid Yellow	The board has power.
Status	Flashing Yellow	The driver is loaded.
Link	Off	The board is not receiving a signal from a switch or remote system.
Link	Solid Green	The board is receiving a signal from a switch or remote system.

Artisan Technology Group - Quality Instrumentation ... Guaranteed | (888) 88-SOURCE | www.artisantg.com

Problems and Possible Solutions

Problem	Possible Solution
Computer does not boot up	Check to see if the adapter card is properly seated in the PMC mezzanine slot. Try a different PMC mezzanine slot. Remove the adapter and reboot the system. If the system boots up and returns to a normal state, the original adapter is probably defective. Try another adapter that is known to work correctly. If this is not the problem, try changing the interrupt setting or removing other hardware on the bus until the conflict is located.
A network application no longer works	If the application program worked prior to the installation of the adapter, there is probably a hardware conflict. Some programs which access the hardware can cause a conflict at some point. This typically happens with hardware such as printers and modems. If you suspect a hardware conflict, check the PCI configuration that came with your system to resolve the problem.
The card cannot communicate with other hosts on the network	Check the network cable. Make sure the media is correctly installed. Try to ping other endstations on the network from your host computer. Try to ping the host computer from another endstation on the network.
Status LED not lit, self-test failed	Do a power reset of the computer by turning the power off and then on again. Make sure the adapter card is seated correctly in the PMC mezzanine slot. Try another PMC mezzanine slot. Try another adapter which is known to operate correctly.
Link LED not lit, no communications	Check whether the cable is defective by trying a different cable. Check the transmit and receive wiring to see if they are reversed. The connector my not be oriented correctly.

Artisan Technology Group - Quality Instrumentation ... Guaranteed | (888) 88-SOURCE | www.artisantg.com

Problem	Possible Solution
Host adapter not found	The PCI system in your computer is supposed to automatically configure the bus address locations; therefore, an address conflict is probably not the problem. If the driver is installed correctly, a driver message should appear in the driver-event log during bootup of the computer. 1. If the operating system did not find the host adapter after you rebooted the machine, the adapter hardware interrupt or configuration registers may not match what the operating system expects. Instead of rebooting the system, turn the power off and then on again to reset all components to an initial state. 2. Make sure the adapter card is seated correctly in the bus expansion slot. Try another PMC mezzanine slot. Try another adapter which is known to operate correctly. 3. Check for correct configurations of the network cable to the adapter card. Verify the cable is properly connected at both ends. Ping the failed system from another host on the network.

Artisan Technology Group - Quality Instrumentation ... Guaranteed | (888) 88-SOURCE | www.artisantg.com

Artisan Technology Group - Quality Instrumentation ... Guaranteed | (888) 88-SOURCE | www.artisantg.com

Specifications A

4515/4525/4575 Specifications

Item	Specification
Memory	**4525:** 128K buffer **4515:** 128K or 512K buffer **4575:** 128K, 512K, or 1M buffer 1K serial EEPROM Optional Expansion ROM 128K Control SRAM
Host Bus Interface	PMC P1386.1 Draft 2.0 32-bit 0 wait state Master 132 Mbyte/s burst DMA rate 32-bit Slave 128-Byte FIFO
Network Interface	155 Mbps SONET OC-3c fiber 155 Mbps SDH STM-1 fiber 155 Mbps SONET UTP 25.6 Mbps AF-PHY-0040.00 UTP
Standards Compliance IEEE: ATM Layer: ATM Adaptation Layer:	 IEEE 1496 CCITT I.361, ANSI T1S1/92-002R3 AAL 5
Operating Power	7.5W (1.5A @ 5V)
Interrupts	Interrupt Pin: INTA#
Diagnostics	LEDs: - Green “Live incoming link” - Yellow “Status”
PCI Slave	Memory and Configuration cycles Write posting

Artisan Technology Group - Quality Instrumentation ... Guaranteed | (888) 88-SOURCE | www.artisantg.com

Item	Specification
PCI Master	Zero wait states Memory cycles only Burst size selections: 64, 32, 16, 8, 4 (Tx) 64, 48, 32, 16, 8, 4 (Rx, On-board) 48, 32, 16, 8, 4 (Rx, CELL-FIFO) Memory Read Line support Memory Read Multiple support Memory Write and Invalidate
Mechanical PMC ATM adapter	 PMC mezzanine slot
Operating Environment Temperature Relative Humidity Altitude	 0–55° C / 32–131° F 10–95% noncondensing 0–15,000 feet
Storage Environment Temperature Relative Humidity Altitude	(adapter stored in its original packaging) -40–85° C / -42–185° F 10–95% noncondensing 0–50,000 feet
Network Connections SC Duplex (155 Mbps) SC Duplex (155 Mbps) Compu-shield (155 Mbps) Compu-shield (25.6 Mbps)	 Single Mode Fiber (8.5/125) Maximum cable length: 15 km Minimum cable length: 3 m Dual Mode Fiber (62.5/125) Maximum cable length: 2 km Minimum cable length: 3 m Category 5 UTP Copper Maximum cable length: 100 m Category 3, 4 or 5 UTP Copper Maximum cable length: 100 m

Artisan Technology Group - Quality Instrumentation ... Guaranteed | (888) 88-SOURCE | www.artisantg.com

Cabling B

Straight-Through Cable

To connect an adapter to an ATM switch, use a straight-through cable.

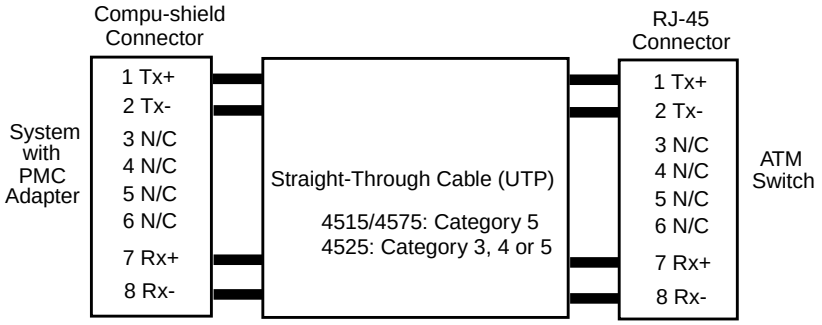

Crossover Cable

To connect two endstations back-to-back, use a crossover cable.

CAUTION

For straight-through and crossover cabling to meet EMI specifications, the unused pairs must be connected at both ends of the cable to the Compu-shield and/or RJ-45 connectors.

Artisan Technology Group - Quality Instrumentation ... Guaranteed | (888) 88-SOURCE | www.artisantg.com

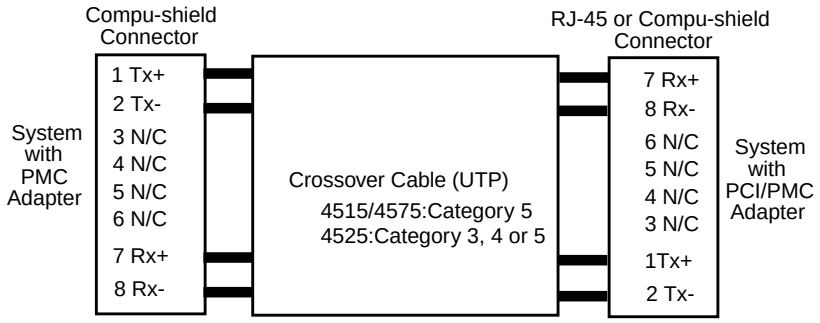

Artisan Technology Group - Quality Instrumentation ... Guaranteed | (888) 88-SOURCE | www.artisantg.com

ATM Technology Overview

C

Introduction to ATM

Asynchronous Transfer Mode (ATM) is a switched, connection-oriented technology that allows for sending voice, data, images, and video over the same network media. With significantly higher bandwidths, applications such as multimedia and teleconferencing are supported with a quality of service that is not available from legacy LANs such as Ethernet and Token Ring. However, ATM can be scaled down to interface with a wide range of existing network configurations. This flexibility in implementation is possible because of ATM's inherent scalability that extends from the desktop to supercomputers.

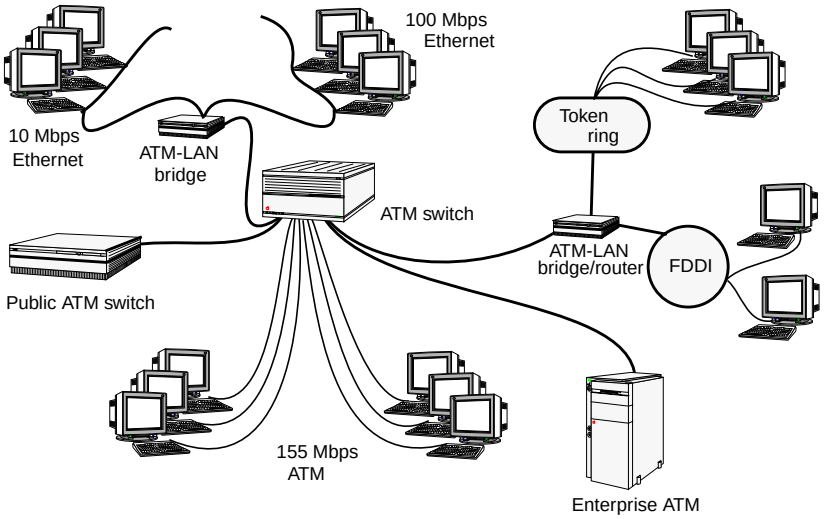

Figure C-1. ATM Network Topology

Artisan Technology Group - Quality Instrumentation ... Guaranteed | (888) 88-SOURCE | www.artisantg.com

The core concept of ATM is cell switching. Cell switching combines the benefits of the packet switching used in traditional data networks with the circuit switching technology of voice communications. All data, voice, and video are converted into small, fixed-length packets of 53 bytes each called cells. These cells provide a standard way to combine the differences in transmission rates required by data and images (bursty, variable-length packets) with the constant, average rate required by voice and full-motion video. Because all cells are the same length, the traditional overhead delays encountered with variable-length packets are virtually eliminated.

Virtual Circuits

ATM uses *virtual circuits* to create individual communication links between network nodes for transporting the 53-byte fixed-length cells. These virtual circuits carry all transmissions between nodes and maintain the correct cell sequence throughout the length of the transmission, as well as providing a defined Quality of Service (QoS).

Virtual Circuit Connections

A Virtual Circuit Connection (VCC) is a path or a connection between any source and any destination in the ATM network. There are two types of virtual circuits in an ATM network, permanent virtual circuits (PVCs) and switched virtual circuits (SVCs). A connection between two stations is handled by means of manual configuration (PVCs) or signalling (SVCs). All communication between the two end systems proceeds along the same VCC. The VCI in the ATM cell header is assigned per network link; that is, end station-to-switch, switch-to-switch, switch-to-end station, and so on.

Artisan Technology Group - Quality Instrumentation ... Guaranteed | (888) 88-SOURCE | www.artisantg.com

4575.b : atm.ovr 19 Wed Aug 13 14:57:25 1997

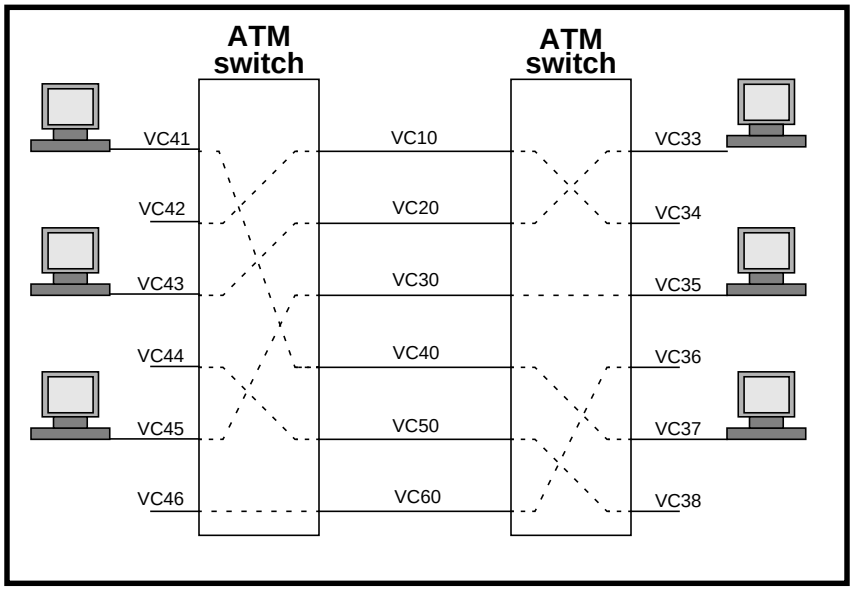

Figure C-2. Virtual Circuits

The Virtual Path (VP) creates groups of the VCs carried between the ATM entities, such as the ATM switches shown in Figure C-2. The VCs associated with a VP are globally switched without unbundling or processing the individual virtual circuits. Thus, the cell-carrying capacity of each VC is preserved, and the quality of service of the VP can be scaled to very high speeds.

Permanent Virtual Circuits

Permanent virtual circuits are permanent, static connections between the network nodes; that is, the nodes operate as if they are connected with a dedicated physical line. To implement PVCs, you create a table for each station listing the VCIs that

Artisan Technology Group - Quality Instrumentation ... Guaranteed | (888) 88-SOURCE | www.artisantg.com

identify the first steps in the paths leading to each of the other stations with which it is to communicate, as well as a master table that links all the information in the individual station tables at the switch. This means that when you move a station, you must recreate its table, as well as its information in the master table at the switch, in order for the station to reconnect to the network.

Switched Virtual Circuits

Switched virtual circuits (SVCs) are created dynamically for each session by signalling software in the end stations and the switches, and thus eliminate the manual work involved in implementing PVCs. SVCs are similar to a voice telephone network, where connections between any two end points on the network are created dynamically for each session and torn down when the exchange of information is complete. All the ATM switch has to do is identify the output port to which a received cell needs to be routed, and what the new VPI/VCI is on the output link.

Artisan Technology Group - Quality Instrumentation ... Guaranteed | (888) 88-SOURCE | www.artisantg.com

4575.b : atm.ovr 21 Wed Aug 13 14:57:25 1997

Fixed-Length Cells

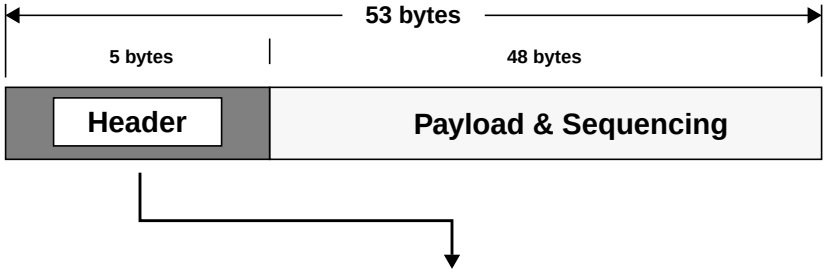

Breakdown of 5-byte Header

	Bits 0-3	Bits 4-7	
Byte #1	GFC/VPI*	VPI	
Byte #2	VPI	VCI	
Byte #3	VCI		
Byte #4	VCI	Payload Type	CLP
Byte #5	Header Error Control		

GFC: Generic Flow Control
VCI: Virtual Circuit Identifier
VPI: Virtual Path Identifier
CLP: Cell Loss Priority bit

* First 4 bits are used as GFC field in the case of User-Network Interfaces.

Figure C-3. The ATM Cell

Fixed-length cells of 53 bytes each are transmitted over the virtual circuit established between the sending node and the receiving node. Each cell contains a 5-byte header (for connection identification, flow control, routing, and error control) and 48 bytes of data. The fixed byte count allows fast hardware switching, lowers processing requirements, and practically eliminates the overhead associated with the processing of variable-length packets. As a result, ATM cells

Artisan Technology Group - Quality Instrumentation ... Guaranteed | (888) 88-SOURCE | www.artisantg.com

can be transmitted through multiple, contiguous connections and still maintain the time-sensitive quality of service required for audio and video applications.

Scalability

A major benefit of ATM is its inherent ability to support many different access and transmission speeds on different physical media. This is referred to as scalability. For example, a cell generated on a 155 Mbps ATM LAN can be carried over a 45 Mbps asynchronous DS3 line to a network in a different location. From there it can be switched into a 2.4 Gbps SONET (synchronous) transport system. A guaranteed amount of bandwidth can be allocated for fixed-bit-rate, delay-sensitive transmissions such as video and voice data. A variable amount of bandwidth can be allocated for the balance of network data that is less time-sensitive.

ATM Layers

The B-ISDN (Broadband Integrated Services Digital Network) model defines three ATM layers:

- The Physical Layer
- The ATM Layer
- The ATM Adaptation Layer (AAL)

Artisan Technology Group - Quality Instrumentation ... Guaranteed | (888) 88-SOURCE | www.artisantg.com

4575.b : atm.ovr 23 Wed Aug 13 14:57:25 1997

In comparison with the OSI model, the three ATM layers are similar to the Physical Layer (Layer 1) and a portion of the Data Link Layer (Layer 2):

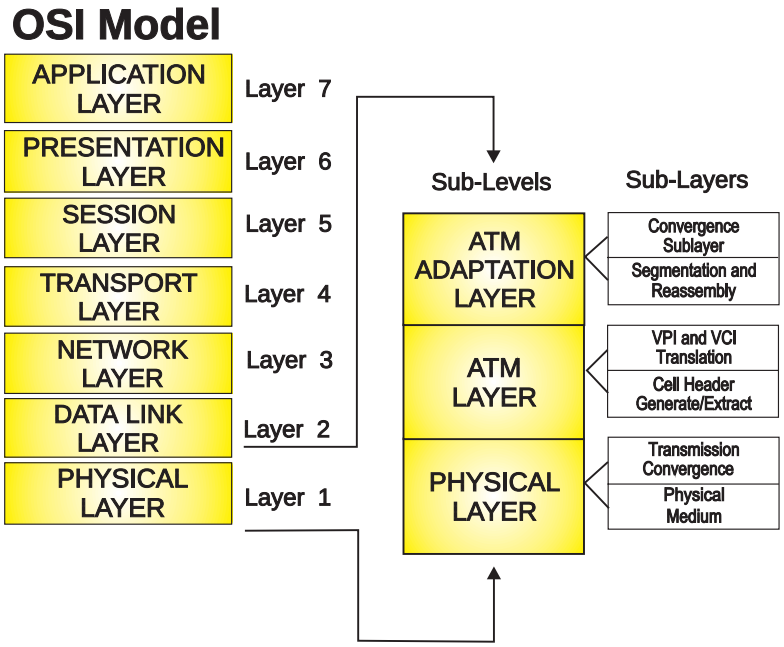

Figure C-4. ATM Compared to the OSI Model

Physical Layer

The ATM Physical layer defines the interface and framing protocol for the ATM network. The ATM Physical layer has two sublayers: Physical Medium Dependent (PMD) and Transmission Convergence (TC). The PMD sublayer provides bit transfer functions that are specific to the medium used in the network. The TC sublayer controls the transmission of frames over the physical medium.

Artisan Technology Group - Quality Instrumentation ... Guaranteed | (888) 88-SOURCE | www.artisantg.com

ATM Layer

The ATM layer defines the cell structure and how cells move between connections in an ATM network. The ATM layer also creates the cells and controls the setup and teardown of virtual connections and virtual paths in the network.

ATM Adaptation Layer

The ATM Adaptation layer (AAL) enhances the services provided by the ATM layer to better serve the next higher layer's functions. It does this by providing timing and sequencing information that is tailored to the particular upper layer it is working with. It converts this information and the data itself to ATM cells according to its rules, and then converts the ATM cells back to data once they reach their destination. Currently there are four defined classifications of AAL service:

- **AAL1:** Supports the transfer of constant bit rate (CBR) data and provides mechanisms for maintaining timing and structure information for that data. Primarily intended for transporting small data samples, such as voice.
- **AAL2:** Definition currently under development by the ITU.
- **AAL3/4:** Supports the transfer of data that is sensitive to cell loss, but less sensitive to delay than AAL1-type data. AAL3/4 segments upper layer data into cells, each of which consists of a 2-octet header, a 2-octet trailer, and 44 octets of protocol data unit (PDU) payload. The header and trailer provide message- and cell-level sequencing, as well as per-cell CRC. This cell-level management comes at the cost of the additional overhead octets in each cell.

Artisan Technology Group - Quality Instrumentation ... Guaranteed | (888) 88-SOURCE | www.artisantg.com

- **AAL5:** Like AAL3/4, AAL5 supports the transfer of data that is less sensitive to delay than AAL1-type data. AAL5 is a simpler and more space-efficient protocol that relies on higher-level services to handle cell loss and other errors. AAL5 encapsulates upper-layer SDUs into PDUs. Each PDU has a single trailer which contains the upper-layer SDU control information, SDU length, and a CRC to guarantee the integrity of the entire PDU. AAL5 then segments the PDU into cells, each of which uses the entire 48-octet cell payload to deliver user data.

The ATM Adaptation layer consists of two sublayers:

- **Segmentation and Reassembly (SAR) layer:** Converts data into cells, and cells back to data.
- **Convergence Sublayer (CS):** Meets the particular service requirements of the next higher layer.

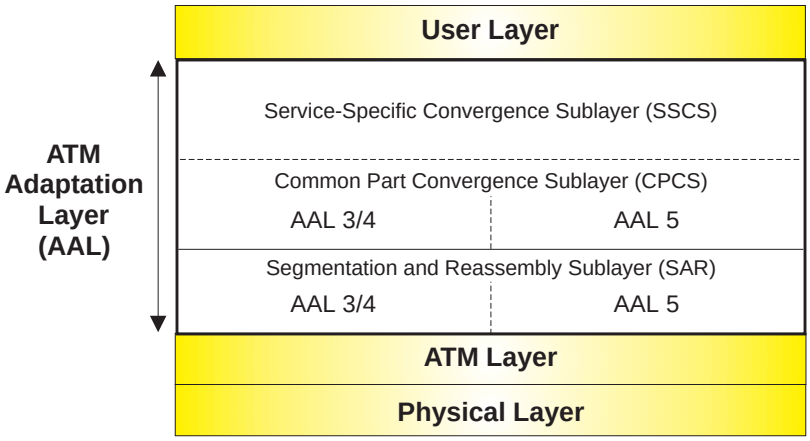

Figure C-5. Protocol Model for AAL3/4 and AAL5

In AAL3/4 and AAL5, the Convergence sublayer consists of two further sublayers:

Artisan Technology Group - Quality Instrumentation ... Guaranteed | (888) 88-SOURCE | www.artisantg.com

4575.b : atm.ovr 26 Wed Aug 13 14:57:25 1997

- **Service Specific Convergence Sublayer (SSCS):** Handles the details of the specific services of the higher layer.
- **Common Part Convergence Sublayer (CPCS):** Converts upper-level SDUs to AAL PDUs.

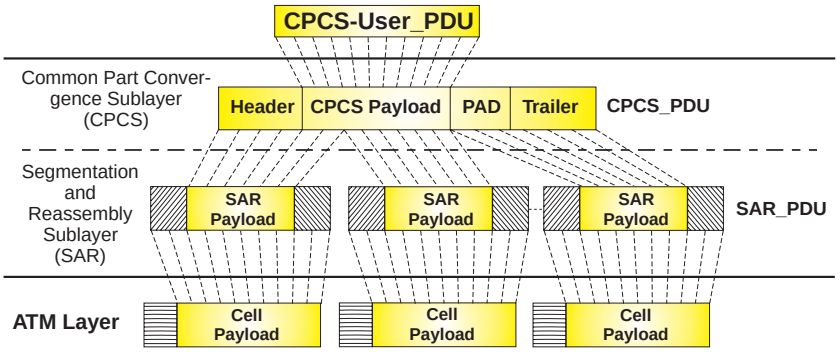

Figure C-6. AAL3/4 Sublayer

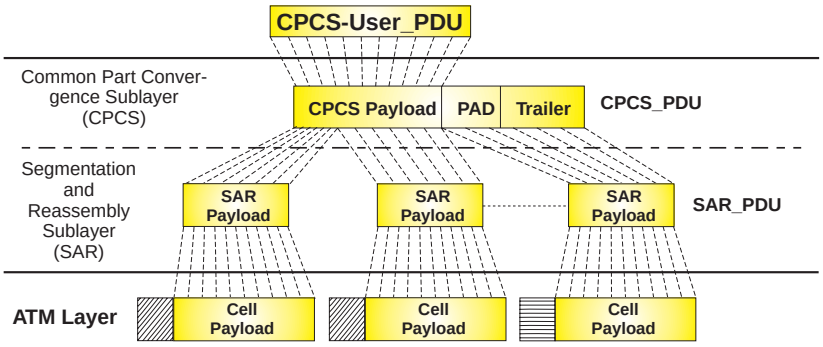

Figure C-7. AAL5 Sublayers

Artisan Technology Group - Quality Instrumentation ... Guaranteed | (888) 88-SOURCE | www.artisantg.com

SONET/SDH

SONET (Synchronous Optical Network) is a North American multiplexing standard which defines a signal used in optical fiber networks. For ATM over fiber, OC-3c, with a base rate of 155.520 Mbps, is the most widely-used signal in the US.

SDH (Synchronous Digital Hierarchy) is the European equivalent of SONET. STM-1 (Synchronous Transport Mode, Level 1) is the European equivalent of OC-3c. STM-1 also has a base rate of 155 Mbps, but has slightly different framing information than the OC-3c signal.

Integrated Local Management Interface

Integrated Local Management Interface (ILMI) is the ATM Forum specification for incorporating network management into ATM networks. ILMI is based on the Simple Network Management Protocol (SNMP). It is used by the Interface Management Entity (IME) on the end station and the switch to manage the physical link connecting them.

A subset of ILMI, known as *address registration*, is used when a station is connected to the ATM network. Address registration lets the end station and the switch dynamically build a unique ATM End Station Address (AESA). The ATM adapter's unique 6-byte identifier is used as the end station identifier (ESI). The ATM switch determines a Network Prefix (link address), and the concatenation of the two define the end station's unique ATM network address.

Artisan Technology Group - Quality Instrumentation ... Guaranteed | (888) 88-SOURCE | www.artisantg.com

LAN Emulation

LAN Emulation (LANE) is designed to allow existing network applications and network protocols to run over ATM networks. It supports using ATM as a backbone for connecting *legacy* networks such as Ethernet, FDDI, and Token Ring. It is also designed to support efficient interaction for both directly attached ATM end systems (in their own subnet) and legacy end systems attached through Layer 2 bridging devices. Also, LAN Emulation allows multiple emulated LANs (ELANs) to exist on the same physically interconnected ATM network. Using an appropriate ATM network interface card, an ATM end station can communicate with all of the following (as an example):

- An Ethernet segment on one ELAN
- A Token Ring segment on a second ELAN
- An FDDI segment on a third ELAN
- A fourth ELAN comprised of ATM nodes only (takes full advantage of high-speed ATM communications)

Artisan Technology Group - Quality Instrumentation ... Guaranteed | (888) 88-SOURCE | www.artisantg.com

4575.b : atm.ovr 29 Wed Aug 13 14:57:25 1997

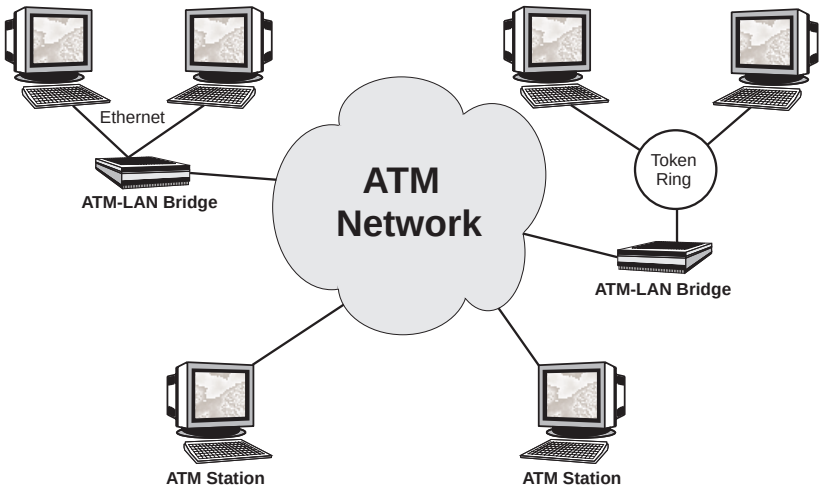

Figure C-8. ATM LAN Emulation

LAN Emulation supports a wide variety of protocols. This is achieved primarily by defining the functionality of the LANE interface at the MAC layer. This allows for protocol-independent data transfer between devices attached to the emulated LAN and to other legacy attached devices, as shown in Figure C-8. However, existing Ethernet/Token Ring/FDDI bridging problems are not solved by removing the old equipment and installing LAN Emulation based ATM equipment. Protocols or applications which are dependent upon the various MAC layer protocols such as SMT/Token Management and CSMA/CD are not supported. These MAC-dependent applications are designed to deal with specific media issues such as ring arbitration and collision detection. In addition, since each ATM link only carries traffic destined for the one station attached to that ATM link, it is not possible for a given station to receive all of the emulated LAN's frames like it would on a shared media network.

Artisan Technology Group - Quality Instrumentation ... Guaranteed | (888) 88-SOURCE | www.artisantg.com

4575.b : atm.ovr 30 Wed Aug 13 14:57:25 1997

LAN Emulation provides a way for legacy LAN applications to operate over ATM while hiding the complexities of ATM point-to-point connections. The ATM stations are arranged into groups (through an ATM switch) that can implement and receive each other's broadcast/multicast requests. Support for Ethernet and Token Ring frame formats is provided so that legacy applications can run without modification over ATM networks. (FDDI uses Ethernet frames.) This is accomplished with true MAC level bridging as shown in Figure C-9. As a result, LAN Emulation supports multiple protocols, such as IP, IPX, and NetBIOS, across the ATM-LAN bridge.

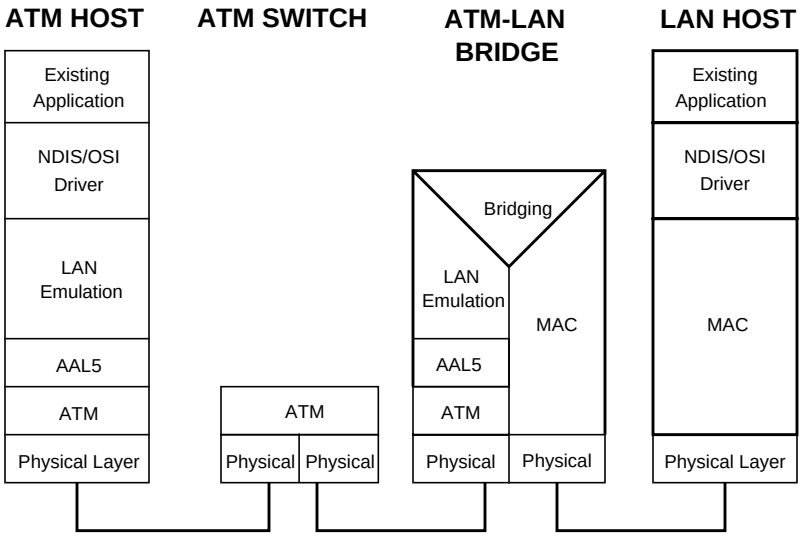

Figure C-9. LAN Emulation Protocol Stack

To illustrate how LAN Emulation works, Figure C-9 shows how an ATM host, an ATM-LAN bridge, and a legacy LAN host fit into the same network. The goal of LAN Emulation (on the ATM side of the bridge) is to convince the upper layer

Artisan Technology Group - Quality Instrumentation ... Guaranteed | (888) 88-SOURCE | www.artisantg.com

protocols that a MAC layer of a legacy LAN lies in the lower layers, when actually it does not. The only discernible difference is that ATM's emulated LAN interface operates at much higher transmission rates.

All LAN Emulation connections (as defined by the ATM Forum) utilize the AAL5 ATM Adaptation layer to reassemble and fragment the PDUs of legacy LANs into 53-byte ATM cells. The ATM-LAN bridge is responsible for implementing the MAC layer emulation to and from the legacy LAN. The LAN Host diagram in Figure C-9 on page 30 emphasizes the fact that no changes are required for existing software to run over ATM networks. The ATM switches merely transport the cells just as they would for any other connection.

LAN Emulation Services

The LAN Emulation Client (LEC) defines the interface between a MAC layer entity of an ATM node and the emulated LAN. The LAN Emulation Service defines how the protocol interoperates with multiple LECs. It provides functions for initialization, address registration and resolution, and data forwarding. The three components which implement these functions are the LAN Emulation Configuration Server (LECS), the LAN Emulation Server (LES), and the Broadcast and Unknown Server (BUS). Some vendors provide these services in one or more switches, while others provide them in end station or edge devices.

LAN Emulation Configuration Server

The LECS provides a central point of contact for each LEC on the ATM network to acquire configuration information, including the address of the LES to use for a particular ELAN. LECS information is implemented and maintained by network personnel. Depending upon the vendor, the LECS

Artisan Technology Group - Quality Instrumentation ... Guaranteed | (888) 88-SOURCE | www.artisantg.com

implementation may provide numerous features including support for multiple ELANs, ELAN management based on MAC addresses, and other network management features. The key point is that the LECs can initially communicate with the LECS in order to locate the appropriate LES for their emulated LAN. The connection between the LEC and the LECS may be terminated when this transfer of information is complete.

LAN Emulation Server

The LES provides address resolution functions. This is a critical part of LAN Emulation due to the fact that MAC addresses are 6-byte entities and ATM addresses are 20-byte entities. Each LEC notifies the LES of its MAC-ATM address bindings. The LES stores the MAC-ATM relationship so it can resolve queries from other clients for these MAC addresses.

All LECs on an ELAN are connected to the same LES. All LECs on the same ELAN must use the same Maximum Transfer Unit (MTU) size and must log in with the LES before attempting to communicate with any other LEC in the group. An ELAN's MTU size depends on what type of legacy edge devices (if any) are being supported. If the network interface card at the ATM node supports multiple LECs, each client on the card may be configured to a different ELAN, and may have a different MTU size than the other clients. For example, a 1.5K MTU size is used to communicate with Ethernet subnets, 4.5K for Token Ring and FDDI, and 9K (or maximum rate) when all nodes on the ELAN are ATM nodes only. If more than one ELAN with the same MTU size is required, differentiating characteristics (for example, logical names) are configured in the LECS by network personnel.

The connection between the LES and each LEC is open as long as the client is up and running. The LES maintains information about all the clients currently connected to the server. When a client is disconnected or turned off, the LES

Artisan Technology Group - Quality Instrumentation ... Guaranteed | (888) 88-SOURCE | www.artisantg.com

removes all information about the client. Therefore, ATM networks using LAN Emulation support relocation of end stations with ease. Moving a station is a matter of physically moving the hardware to a new location, connecting it to the same or another ATM switch in the network, and turning on the power. At bootup, each client contacts the LECS, the LECS supplies the ATM address for the appropriate LES, the client joins the LES, and can then start communicating with other clients on that ELAN.

Broadcast and Unknown Server

The BUS provides a simplified mechanism to support both broadcasting and bridged network functionality. In most protocols, the mechanism to translate network addresses to MAC addresses is implemented using the network topology's shared media broadcast capabilities. Since ATM is inherently non-shared, additional work must be done to enable every station on an ELAN to receive the broadcast and multicast frames. The BUS is a centralized server for the ELAN which accepts broadcast traffic from all clients in the group and then forwards that traffic to all the clients on a point-to-multipoint connection.

LAN Emulation Protocol

This section describes how the various phases of the protocol accomplish the goal of getting multiple stations to communicate in the ATM network environment.

1. Initialization

At power-up or a reset, the first action of an LEC is to establish a connection with an LECS. The protocol defines a multi-step procedure to ensure that the LECS can be reached in a variety of environments. The first mechanism involves getting the

Artisan Technology Group - Quality Instrumentation ... Guaranteed | (888) 88-SOURCE | www.artisantg.com

LESC addess(es) via ILMI. If there are no addresses listed, or if none of the addresses work, the *well known* ATM address (defined by the ATM Forum) is used. An error occurs if this address does not work. Additionally an out-of-band mechanism for obtaining the required configuration information may be implemented. This is done by allowing network personnel to enter the address of the appropriate LES directly to the LEC.

2. Configuration

Once a connection to the LECS is established, the LEC transmits a message to the LECS consisting of its own ATM address, MAC address, LAN type, and frame size (MTU) request. Upon validation of the request, the LECS returns the address of the appropriate LES, along with the LAN type and frame size for the LEC to use for this session.

3. Joining

When the LEC gets the ATM address of the LES, it attempts to create a permanent connection to the LES. Once the connection is established, the LEC transmits a message containing the configuration information obtained from the LECS and, optionally, a MAC address to register. Additional MAC addresses can also be registered using a special registration message. The join process culminates in the LES adding the client as a leaf to its point-to-multipoint tree.

4. Registration and BUS Initialization

Upon joining the LES, the LEC requests the ATM address for the “all 1’s” broadcast MAC address. The LES responds with the ATM address for the Broadcast and Unknown Server. The

Artisan Technology Group - Quality Instrumentation ... Guaranteed | (888) 88-SOURCE | www.artisantg.com

LEC then initiates a Multicast Send connection to the BUS, and accepts the incoming Multicast Forward multipoint VCC from the BUS.

5. Data Movement

Once the BUS connections are established, the LEC can begin forwarding frames. When a data frame needs to be transmitted, the LEC checks an internal table to see if a connection already exists for that MAC address. If so, it transmits the frame on that VCC. Otherwise, it queries the LES for the ATM address that corresponds with the MAC address. While waiting for a response, it forwards the frames destined for this MAC address to the BUS. For a device on the legacy side of a bridge, the bridge learns the device's MAC when the device starts transmitting, and future requests to resolve the address result in the bridge responding with its own ATM address.

Connections time out after periods of 20 minutes of inactivity in both directions. MAC entries received from the bridges are also timed out and reverified. This is done to support station movement on the legacy network where the edge devices do not have definitive knowledge of station movement activity.

LAN Applications

The advantage of LAN Emulation is that existing applications and protocols can be adapted to ATM merely by installing new ATM interfaces and drivers. The disadvantage is that these driver interfaces do not utilize any of the benefits of ATM, such as varying the quality of service, full ATM addressing, and other non-LAN protocol applications. For future software designs, the ATM Forum has developed a Native Service Interface which defines how new applications can be adapted to ATM networks, multiple vendors, and WinSock 2 support. This provides an evolutionary solution where existing

Artisan Technology Group - Quality Instrumentation ... Guaranteed | (888) 88-SOURCE | www.artisantg.com

applications can continue to work as before, while new applications are being developed to take full advantage of ATM capabilities. The two interfaces are able to coexist in the same end systems.

For More Information

For more information about ATM networking, see `http://www.atmforum.com`

Artisan Technology Group - Quality Instrumentation ... Guaranteed | (888) 88-SOURCE | www.artisantg.com

PCI/PMC Technology Overview

D

PCI/PMC Technology

Intel® Corporation's Architecture Lab, along with leading computer vendors (the PCI SIG), designed the Peripheral Component Interconnect (PCI) bus as the next generation I/O expansion bus. Its predecessors were the ISA, EISA, and MCA buses. The PCI bus is a high-performance bus found in systems ranging from low-end PCs to high-end servers.

PCI was developed to overcome the bottlenecks associated with traditional 16-bit expansion slots, operating at 8 MHz, or essentially 5 megabytes per second. The result was a local bus system capable of transferring 32 bits of data at 33 MHz for a maximum data transfer rate of 132 MBps. The PCI Local Bus takes peripherals off the I/O bus and connects them together with the CPU and the memory subsystem. This provides a wider, faster pathway for data, which is especially important for servers, graphic-intensive software, high-speed networks, and other high-performance peripherals.

Features of the PCI Local Bus architecture include:

- Processor-independent bridge between the CPU and high-speed peripherals that serves as a traffic controller between buses
- 32-bit memory addressing for CPU, Direct Memory Access (DMA) devices, and bus masters
- 32-bit data transfers at 33 MHz for CPU, DMA, and bus master devices
- 132 MBps maximum data transfer rate
- Data is written and read from the peripherals in linear bursts at every clock cycle

Artisan Technology Group - Quality Instrumentation ... Guaranteed | (888) 88-SOURCE | www.artisantg.com

- Buffers located between the peripherals and the CPU that allow multiple, high-speed peripherals to be attached to the same PCI local bus
- Automatic configuration of system and expansion boards

Three sizes of PCI add-in boards are defined: long, short, and variable short length. Systems are not required to support all board types. To accommodate the 5V and 3.3V signalling environments and to facilitate a smooth migration path between the voltages, three add-in board electrical types are specified: a “5 volt” board which plugs into only 5V connectors, a “universal” board which plugs into both 5V and 3.3V connectors, and a “3.3 volt” board which plugs into only 3.3V connectors.

The PMC bus was designed for embedded environments. It implements PCI bus logic in a daughtercard (mezzanine) form factor.

CompactPCI is another PCI form factor which implements PCI bus logic in a Eurocard 3U or 6U format with a high-density connector. This form factor is used in environments similar to the more traditional VME bus. The PCI Industrial Computer Manufacturers Group (PICMG) is developing the CompactPCI standard.

Artisan Technology Group - Quality Instrumentation ... Guaranteed | (888) 88-SOURCE | www.artisantg.com

Glossary

The ATM Forum's glossary is at `http://www.atmforum.com` (click on the Glossary icon).

The following glossaries may also be helpful:

- Networking Glossary: `http://www.ctcnet.com/tips/glossary.htm`
- Computing Dictionary: `http://wfn-shop.Princeton.EDU/foldoc/`

802.2 IEEE ◆ Standards that govern the LLC within the Data Link layer of the OSI model. LLC frames carry user information between the nodes on a network and define the transmission of a frame between two stations. These standards are common across the various lower level standards within the Data Link and the Physical layers.

802.3 IEEE ◆ Standards that govern the use of the CSMA/CD (Carrier Sense Multiple Access/Collision Detection) network access method used by Ethernet networks.

802.5 IEEE ◆ Standards that govern the use of the token ring indicator and frame priority.

AAL (ATM Adaptation Layer) ◆ Converts packets of data to 53-byte cells for transmission on the network. Several AALs are defined to provide different types of service for ATM connections, and to provide a method of mapping data from a particular class of service into ATM cells in such a way that the data can be remapped into its original format at the other end of an ATM network.

ABR (Available Bit Rate) ◆ One of the two non-guaranteed service types (the other is UBR). With ABR, the network makes no absolute guarantee of cell delivery, but does guarantee a minimum bit rate for user transmission. ABR also makes an effort to keep cell loss as low as possible through a closed feedback loop conveying congestion information back to the source so the source can adjust its rates.

adapter ◆ A device, usually a user interface card, that physically connects an end station to the network medium (for example, twisted pair, coaxial, fiber).

address registration ◆ A subset of ILMI which enables the switch and end station to dynamically construct an end station address.

Artisan Technology Group - Quality Instrumentation ... Guaranteed | (888) 88-SOURCE | www.artisantg.com

AESA (ATM End Station Address) ◆ The 20-byte address defined by the ATM Forum for identifying end stations on a private ATM network.

ANSI (American National Standards Institute) ◆ An organization which coordinates, develops, and publishes standards used in the United States.

ARP (Address Resolution Protocol) ◆ The Internet protocol used to dynamically translate the Internet address of a network host to its LAN hardware address. This action is limited to LANs that support hardware broadcasts.

ASIC (Application Specific Integrated Chip)

ATM (Asynchronous Transfer Mode) ◆ A switched, connection-oriented technology for LANs and WANs. ATM accommodates a mix of data types, such as audio, video, and data, on a single network. The multiplexed information is organized into cells, and can be transported between network nodes at many different access and transmission speeds. Synonyms: asynchronous transmission, cell relay.

ATM Forum ◆ A communications industry organization made up of hundreds of vendors and users that defines ATM networking protocols.

ATM LAN ◆ Topology that consists of ATM switches and computer interfaces that provide high data rate connectivity for voice, video, and data (IP and multimedia). In addition, ATM interfaces are being integrated into existing LAN hubs and bridge/router platforms. Besides supporting high bandwidth, ATM LANs map to the WAN via central office ATM switches and services being deployed in the telecommunications world.

attenuation ◆ Signal power lost in a transmission medium as the signal travels from sender to receiver.

backbone ◆ A network configuration that connects LANs to form an integrated network.

bandwidth ◆ Capacity for transmitting data through a given circuit. Generally, the greater the bandwidth, the more information can be sent through a circuit during a given amount of time.

best effort ◆ A QoS class where no specific traffic parameters and no attempts are made to guarantee no cell loss or delay variation.

B-ISDN (Broadband ISDN)

bridge ◆ An internetworking device used to connect two or more computer networks at the MAC level, and to forward MAC packets among those networks.

Artisan Technology Group - Quality Instrumentation ... Guaranteed | (888) 88-SOURCE | www.artisantg.com

BUS (Broadcast and Unknown Server) ◆ A LAN emulation server for ATM networks which has the ability to receive broadcast requests and forward them to all the attached LECs, thus emulating the broadcast feature of Ethernet and Token Ring LANs.

CAC (Connection Admission Control) ◆ An ATM function which determines whether a VC connection request should be accepted or rejected.

call control ◆ A process that uses signalling procedures to establish VCs. These connections are much like telephone calls. Synonym: call setup.

CAT-3 (Category 3 UTP) ◆ A type of UTP commonly used with ATM interfaces for cell transmission at low speeds (25 Mbps) and at distances up to 100 meters.

CAT-5 (Category 5 UTP) ◆ A type of UTP commonly used with ATM interfaces for higher-speed cell transmission (155 Mbps).

CBR (Constant Bit Rate) ◆ The continuous transmission of data at a fixed and guaranteed rate over a network with a guaranteed cell delay variation.

CCITT (International Telephone and Telegraph Consultative Committee) ◆ See *ITU (International Telecommunication Union)* on page 44.

CDV (Cell Delay Variation) ◆ A QoS parameter that measures the difference between a single cell's transfer delay (CTD) and the expected transfer delay. It gives a measure of how closely cells are spaced in a VC. CDV can be introduced by ATM multiplexers (MUXs) or switches.

cell ◆ Basic ATM transmission unit. A 53-byte packet comprised of a 5-byte header and a 48-byte payload. User traffic is segmented into cells at the source, transmitted through the ATM switched network, and reassembled at the destination.

cell FIFO ◆ Optimized DMA of ATM cells from reassembly engine to system memory requiring minimal CPU intervention.

cell switching ◆ ATM technology that combines the best features of circuit-and packet-switching technology and supports several classifications of AAL service (voice/video, packet/video, data).

circuit switching ◆ A connection-oriented service that uses switching techniques such as time division. It is an ideal mode for continuous, constant bandwidth applications, such as voice and video.

Artisan Technology Group - Quality Instrumentation ... Guaranteed | (888) 88-SOURCE | www.artisantg.com

CLIP (Classical IP) ◆ A set of IETF-defined protocols for developing IP over ATM networks. The main issues in the transport of IP over ATM that CLIP resolves are packet encapsulation and address resolution.

CLP (Cell Loss Priority) ◆ A 1-bit field in the ATM cell header that corresponds to the loss priority of a cell. Lower-priority (CLP=1) cells can be discarded in congestion situations.

compression ◆ Method of reducing the quantity of data that must be transmitted across a network, primarily to enable the transmission of voice and video. The major compression standards are JPEG for still images, MPEG/MPEG-2 for full-screen motion images, and Px64 and H.261 for video conferencing.

configuration cycle ◆ A type of I/O cycle provided on the PCI bus to facilitate system configuration.

CPC (Cell Personality Card)

CPCS (Common Part Convergence Sublayer) ◆ Part of the AAL convergence sublayer (CS), it must be present in the AAL implementation. Its task is to pass primitives to the other AAL sublayers (SAR, SSCS). It supports the functions of the standardized Common Part AALs: AAL1, AAL3/4, and AAL5.

CRC (Cyclic Redundancy Check) ◆ A bit errors detection technique that employs an algorithm to calculate a value for the information bits in a packet. The receiver, using the same algorithm, recalculates that value and compares it to the value received. If the two values do not agree, the transmitted packet is considered to be in error.

DLE (DMA/Descriptor List Element) ◆ The structure that describes to the PCI bus interface how to move data between the packet buffer and system memory.

DMA (Direct Memory Access) ◆ A fast method of moving data between two subsystems without processor intervention.

DS3 (Digital Standard 3) ◆ This ANSI standard defines the format of asynchronous data sent at the rate of 44.736 Mbps.

E.164 ◆ An ITU-defined 8-byte address format. In ATM it is typically used in public networks and is provided by the telecommunication carriers, while 20-byte NSAP-format addresses are used in private networks.

Artisan Technology Group - Quality Instrumentation ... Guaranteed | (888) 88-SOURCE | www.artisantg.com

EFCI (Explicit Forward Congestion Indication) ◆ A 1-bit field in the cell header that contains information about whether congestion at an intermediate node has been experienced. The EFCI bit is set when, for example, a buffer threshold has been exceeded. When recognized by end stations, causes a reduction in the data rate.

ELAN (Emulated LAN) ◆ See *LANE (LAN Emulation)* on page 45.

end station ◆ A machine, intended for running user application programs, that is connected to a network. In an ATM network, the end station is where an ATM connection is terminated or initiated.

fiber optic cable ◆ A transmission medium designed to transmit digital signals in the form of pulses of light.

FIFO (First In First Out) memory ◆ A type of dual-ported memory where the data is read out in the same order in which it was written in.

fragmentation ◆ A process where large frames from one network are broken up into smaller frames that are compatible with the frame size requirements of the network to which they will be forwarded.

frame ◆ Data in a highly-structured format for the purpose of transmission. *Frame, packet,* and *PDU* are equivalent in most contexts.

FTP (File Transfer Protocol)

GFC (Generic Flow Control) ◆ A field in the ATM cell header that supports multiplexing functions. The GFC mechanism is intended to support simple flow control in ATM connections.

HDLC (High-level Data Link Control) ◆ A framing protocol specified by the ISO that can provide error-free Data Link layer services.

header ◆ Control information attached to the front of a frame or packet. In ATM cells, the header is the bits in a cell allocated for functions required to transfer the cell payload within the network.

HEC (Header Error Control) ◆ A cell header CRC field that guarantees the integrity of the cell header information.

host ◆ Generally, any computer on a network.

host name ◆ A unique name that identifies each host machine on a network.

ICMP (Internet Control Message Protocol) ◆ A Network layer Internet protocol which enables network IP packets to report errors and other relevant information for packet-processing purposes.

Artisan Technology Group - Quality Instrumentation ... Guaranteed | (888) 88-SOURCE | www.artisantg.com

IEEE (Institute of Electrical and Electronic Engineers) ◆ An information exchange organization. Among other functions, it coordinates, develops, and publishes network standards for use in the United States, following ANSI rules.

IETF (Internet Engineering Task Force) ◆ Organization responsible for all Internet protocols (for example, IP, TCP, FTP).

ILMI (Integrated Local Management Interface) ◆ The ATM Forum standard, ILMI is used to manage the physical and logical interface between two ATM devices.

IME (Interface Management Entity) ◆ The logical management layer implementing ILMI.

IP (Internet Protocol) ◆ A networking protocol for providing a connectionless (datagram) service to the higher transport protocol. It is responsible for discovering and maintaining topology information and for routing packets across homogeneous or heterogeneous networks. Combined with TCP, it is commonly known as the TCP/IP platform.

IPX (Internetwork Packet Exchange Protocol) ◆ A connectionless Network layer protocol similar to IP.

ISDN (Integrated Services Digital Network) ◆ An early, CCITT-adopted protocol reference model intended to provide a ubiquitous, end-to-end, interactive digital service for data, audio, and video. Synonym: narrowband ISDN.

ISO (International Standards Organization) ◆ An international body that creates networking standards, including the OSI model.

ITU (International Telecommunication Union) ◆ The international standards organization for telecommunications, previously known as the CCITT (International Telephone and Telegraph Consultative Committee). For more information, see `http://www.itu.ch`

isochronous ◆ A time-slot protocol that allows delivery of realtime data by dividing a time slot into equal-size mini slots allocated to different channels for synchronous transmission of information.

jitter ◆ See *CDV (Cell Delay Variation)* on page 41.

KB (Kilobytes) ◆ One kilobyte is equivalent to 1024 bytes when referring to memory size, and 1000 bytes when referring to speed.

Artisan Technology Group - Quality Instrumentation ... Guaranteed | (888) 88-SOURCE | www.artisantg.com

Kbps (Kilobits per second)

KBps (Kilobytes per second)

LAN (Local Area Network) ◆ A data communications system designed to operate over a limited geographic distance, such as a single building.

LANE (LAN Emulation) ◆ An ATM Forum service specification that allows a connection-oriented ATM network to emulate legacy LAN (for example, Ethernet or Token Ring) services, such as broadcast.

LAP-D (Link Access Procedure-D) ◆ A Data Link layer procedure using D channel communications, typical of ISDN.

LE-ARP (LAN Emulation ARP) ◆ The ARP used in LAN emulation for binding a requested ATM address to the MAC address.

LEC (LAN Emulation Client) ◆ Typically located in an ATM end system (for example, an ATM host), its task is to maintain address resolution tables and forward data traffic. It is uniquely associated with an ATM address.

LES (LAN Emulation Server) ◆ A server which provides support for the LAN emulation address resolution protocol (LE-ARP). The LECs register their own ATM and MAC addresses with the LES. An LES is uniquely identified by an ATM address.

LECS (LAN Emulation Configuration Server) ◆ A server whose main function is to provide configuration information to an LEC (such as the ELAN it belongs to or its LES).

LLC (Logical Link Control) ◆ The upper half of the Data Link layer in LANs. Performs error control, broadcasting, multiplexing, and flow control functions. See also *MAC (Medium Access Control)* on page 45.

LLC/SNAP (Logical Link Control/SubNetwork Attachment Point)

local ◆ Describes files and devices, such as disk drives, that are attached to, or on, your machine.

MAC (Medium Access Control) ◆ A set of protocols that are the lower part of the Data Link layer and comprise the basis of the IEEE LAN specifications. In general, MAC determines the way devices can transmit in a broadcast network. See also *LLC (Logical Link Control)* on page 45.

Mbps (Megabits per second) ◆ Transmission speed or rate of one million bits per second.

MBps (Megabytes per second) ◆ Transmission speed or rate of one million bytes per second or 8 Mbps.

Artisan Technology Group - Quality Instrumentation ... Guaranteed | (888) 88-SOURCE | www.artisantg.com

MIB (Management Information Base) ◆ The specification that defines objects for referencing variables such as integers and strings. In general, it contains information about the network's management and performance (for example, traffic parameters). See also *ILMI (Integrated Local Management Interface)* on page 44.

MTU (Maximum Transmission Unit) ◆ The largest packet that can be sent over a given medium.

multicast ◆ A technique that allows copies of a single packet or cell to be passed to a set of destinations.

multimode fiber ◆ A large-core (62.5 micron) optical fiber through which multiple signals can propagate. Length constraint is 2 kilometers.

network ◆ An interconnection of multiple stations or systems that are able to send messages to and receive messages from one another.

NIC (Network Interface Card) ◆ A component that connects a station to a network (for example, a LAN). Synonym: adapter.

NMS (Network Management Station) ◆ The system responsible for managing a network or a portion of a network. The NMS communicates to network management agents (an agent resides in each managed node) using a network management protocol.

NNI (Network-to-Network Interface) ◆ The interface between two pieces of equipment on a public network.

node ◆ A device, such as a station or concentrator, connected to the network media, usually with an adapter.

NRZI (Non-Return to Zero Inverted) ◆ A data transmission technique where a polarity transition from low to high, or high to low, represents a logical 1. The absence of a polarity transition represents a 0.

NSAP (Network Services Access Point) ◆ In the OSI environment it is the SAP between the network and the transport layers. It identifies a Data Terminal Equipment by a unique address.

OAM (Operations and Maintenance) ◆ Set of administrative and supervisory actions regarding network performance monitoring, failure detection, and system protection.

OAM cell ◆ A cell that contains ATM layer management information. It does not form a part of the upper layer information transfer. Generated by hardware or network administrators. Cell header bits distinguish OAM cells from normal data cells.

Artisan Technology Group - Quality Instrumentation ... Guaranteed | (888) 88-SOURCE | www.artisantg.com

OC-3c (Optical Carrier level 3, concatenated) ◆ An optical signal defined with a base rate of 155.52 Mbps. The concatenated signal is indivisible, that is, it cannot be multiplexed and demultiplexed.

OSI (Open Systems Interconnection) Model ◆ The 7-layer protocol model defined by the ISO for data communications.

packet ◆ Data in a highly-structured format for the purpose of transmission. *Frame, packet,* and *PDU* are equivalent in most contexts.

packet buffer ◆ Memory used on the Interphase NIC to store data for fragmentation and reassembly. Synonym: Side RAM.

packet switching ◆ Statistical, connectionless switching based on information contained in variable-length packets.

payload ◆ Part of the ATM cell, it contains the actual information to be carried, and may also contain overhead. It occupies 48 bytes.

PCI (Peripheral Component Interconnect) bus ◆ A high-performance multiplexed address and data bus. Supporting 32-bit with optional 64-bit data transfers, the PCI bus is intended to be an interconnect between peripheral controllers, peripheral add-in boards, and processor/memory systems. The PCI bus operates at up to 33 MHz, providing burst transfer rates up to 132 MBps 32 bits wide, or up to 264 MBps 64 bits wide.

PDU (Protocol Data Unit) ◆ Data in a highly-structured format for the purpose of transmission. *Frame, packet,* and *PDU* are equivalent in most contexts.

PHY (Physical Layer) ◆ Layer 1 of the OSI model. Defines and handles the electrical and physical connections between systems. The Physical layer can also encode data in a form that is compatible with the medium (coaxial, twisted pair, fiber, and so on).

PING (Packet Internet Groper) ◆ An Internet protocol facility used to test the reachability of destinations by sending an ICMP echo request, and waiting for a reply.

PMC (PCI Mezzanine Card) ◆ A daughtercard form factor implementation of the PCI bus specification.

PMD (PHY Medium Dependent) ◆ A standard that defines the medium and protocols to transfer symbols between PHYs.

point-to-multipoint connection ◆ A unidirectional, one-to-many VC that allows one station to simultaneously send data to the connected end stations.

point-to-point connection ◆ A bidirectional VC between two end points.

Artisan Technology Group - Quality Instrumentation ... Guaranteed | (888) 88-SOURCE | www.artisantg.com

primitive ◆ Data and events passed between a layer service user and a layer service provider.

protocol ◆ A set of rules and conventions that govern the exchange of information between communicating parties.

PVC (Permanent/Provisioned Virtual Connection) ◆ A VC provisioned for indefinite use in an ATM network, established by the network management system (NMS). See also *SVC (Switched Virtual Circuit)* on page 50.

Q.93B ◆ Early draft of the signalling specification now known as Q.2931, on which UNI 3.0 was based.

Q.2110 ◆ ITU Recommendation for specifying the UNI SSCOP.

Q.2931 ◆ ITU Recommendation derived from both Q.931 and Q.933 to provide SVC specifications and standards.

QoS (Quality of Service) ◆ The set of ATM performance parameters that characterize the traffic over a given VC.

QoS classes ◆ Five service classes defined by the ATM Forum in terms of the QoS parameters.

reassembly ◆ The portion of the ATM SAR that reassembles an incoming multiplexed stream of ATM cells into packets.

RFC (Request for Comment) ◆ IETF documents that contain proposed standards and specifications. RFCs can be either approved, or simply archived as historical recommendations.

RFC-1577 ◆ IETF standard for running Layer 3 IP traffic directly over ATM. See also *CLIP (Classical IP)* on page 42.

RJ-45 connector ◆ Standard 8-wire connector for IEEE 802.3 networks and some telephone applications.

SAAL (Signalling AAL) ◆ Service-specific parts of the AAL protocol responsible for signalling. Its specifications, being developed by the ITU, were adopted from N-ISDN.

SAP (Service Access Point) ◆ Functional interface between the layers in the OSI model through which lower layers provide services to the higher layers along with PDUs.

SAR (Segmentation and Reassembly) ◆ The lower half of the AAL. The segmentation portion inserts data from packets into cells, adds any necessary header or trailer bits to the data, and passes the 48-octet payload to the ATM layer. Each AAL type has its own SAR format. At the destination, the reassembly portion extracts the cell payload and rebuilds the packet.

Artisan Technology Group - Quality Instrumentation ... Guaranteed | (888) 88-SOURCE | www.artisantg.com

SAR-PDU ◆ The 48-octet PDU that the SAR sublayer exchanges with the ATM layer. It is comprised of the SAR-PDU payload and any control information that the SAR sublayer adds.

SC (Subscriber Connector) ◆ A connector where the transmit and receive fibers are one keyed module plug that latches.

SDH (Synchronous Digital Hierarchy) ◆ A hierarchy that designates signal interfaces for very high-speed digital transmission over optical fiber links. See also *SONET (Synchronous Optical Network)* on page 49.

SDU (Service Data Unit) ◆ User data passed through a SAP between the layers of the OSI or a similar model.

signalling ◆ An ATM connection procedure that dynamically implements explicit routes through switches to establish a communication link with another station on the network.

single-mode fiber ◆ A small-core (9 micron) optical fiber through which only one signal can propagate. Length constraint for the device used in Interphase products is 20 kilometers.

SLIP (Serial Line Internet Protocol) ◆ A protocol for transmitting and receiving IP datagrams via a serial interface.

SNMP (Simple Network Management Protocol) ◆ A high-level, standards-based protocol for network management, usually used in TCP/IP networks. An SNMP manager controls and measures the activities of SNMP agents that are embedded in nodes and network devices on the network. SNMP relies on MIBs embedded in the network resources to monitor and control the network.

SONET (Synchronous Optical Network) ◆ An ANSI-defined standard for high-speed and high-quality digital optical transmission. It has been recognized as the North American standard for SDH.

SSCF (Service Specific Coordination Function) ◆ Part of the SSCS portion of the SAAL. Among other functions, it provides a clear interface for relaying user data and providing independence from the underlying sublayers. See also *SSCOP (Service Specific Connection-Oriented Protocol)* on page 49.

SSCOP (Service Specific Connection-Oriented Protocol) ◆ Part of the SSCS portion of the SAAL. SSCOP is an end-to-end protocol that provides error detection and correction by retransmission and status reporting between the sender and the receiver. It also guarantees delivery integrity. See also *SSCF (Service Specific Coordination Function)* on page 49.

Artisan Technology Group - Quality Instrumentation ... Guaranteed | (888) 88-SOURCE | www.artisantg.com

SSCS (Service Specific Convergence Sublayer) ◆ One of the two components of the Convergence Sublayer (CS) of the AAL. It supports the specific requirements of upper-layer protocols.

ST (Straight Through) connector ◆ A connector where the transmit and receive fibers have separate twist-on connections.

station ◆ An addressable node on the network capable of transmitting and receiving data.

STM (Synchronous Transfer Mode) ◆ A packet-switching approach where time is divided into time slots assigned to single channels during which users can transmit periodically. Basically, time slots denote allocated (fixed) parts of the total available bandwidth.

STM-1 (Synchronous Transport Module-1) ◆ An ITU-defined SDH physical interface for ATM digital transmission at the rate of 155.52 Mbps.

STM-n (Synchronous Transport Module-n) ◆ An ITU-defined SDH physical interface for ATM digital transmission at *n* times the basic STM-1 rate. STM-n and SONET STS-3n transmission rates are equivalent.

STS (Synchronous Transport Signal)

subnet address ◆ An extension of the Internet addressing scheme. Using this method, a site can use a single Internet address for multiple physical networks.

SVC (Switched Virtual Circuit) ◆ A software-created dynamic connection between two network nodes. SVCs are created “on demand” and torn down upon completion of the data transfer.

symbol ◆ The smallest signaling element used by the MAC sublayer. The symbol set consists of sixteen data symbols and sixteen nondata symbols. Each symbol corresponds to a specific sequence of code bits (code group) to be transmitted by the PHY.

synchronous transmission ◆ A data transmission scheme where the interval between transmitted characters is fixed so that start and stop bits are not required. As opposed to asynchronous transmissions, synchronous transmissions are guaranteed a specific percentage of bandwidth on the network medium.

TCP/IP (Transmission Control Protocol/Internet Protocol) ◆ A set of communications protocols that define how different types of computers talk to each other. It is the standard architecture for internetworking multiple organizations, and the common link that ties the huge Internet together.

Artisan Technology Group - Quality Instrumentation ... Guaranteed | (888) 88-SOURCE | www.artisantg.com

TELNET ◆ A TCP/IP protocol that supports remote terminal operations via a network.

Token Ring ◆ A 4 Mbps or 16 Mbps network that uses a ring topology and a token-passing access method.

UBR (Unspecified Bit Rate) ◆ With UBR, the source specifies no traffic parameters, and therefore the network does not guarantee transmission quality.

UNI (User-Network Interface) ◆ Definition of the interface between an end system and an ATM switch. Defines a set of specifications for signaling. Produced by the ATM Forum.

UNI 3.0 ◆ ATM Forum UNI specification for the physical (PHY) and ATM layers, the ILMI, OAM (traffic control), and PVC support.

UNI 3.1 ◆ A corrected version of UNI 3.0, this specification also includes SSCOP standards.

UNI 4.0 ◆ This UNI specification covers signalling issues in ABR and VP, as well as QoS negotiation.

UTP (Unshielded Twisted Pair) ◆ Type 3 cable with one or more twisted pairs where the wiring is not protected from electromagnetic and radio frequency interferences. There are two main categories of UTP used in ATM: category 3 for 25 Mbps, and category 5 for 155 Mbps. See also *CAT-3 (Category 3 UTP)* on page 41 and *CAT-5 (Category 5 UTP)* on page 41.

VBR (Variable Bit Rate) ◆ The bit rate available to a user for the transfer of user information that requires a guaranteed service for a bounded variable transmission rate.

VBR-RT (Variable Bit Rate—Real Time) ◆ One of the service types for transmitting traffic which is timing- and control-dependent and is characterized by having both average and peak cell rates. VBR-RT is suitable for carrying traffic such as packetized (compressed) video and audio.

VBR-NRT (Variable Bit Rate—Non-Real Time) ◆ One of the service types for transmitting traffic which is not timing-critical and is characterized by having both average and peak cell rates. VBR-NRT is well-suited to long data packet transfers.

VC (Virtual Channel/Connection/Circuit) ◆ A logical transmission path or connection between two network endpoints.

VCI (VC Identifier) ◆ A 16-bit identifier in an ATM cell header which, when combined with the VPI, identifies the VC to the next ATM device.

Artisan Technology Group - Quality Instrumentation ... Guaranteed | (888) 88-SOURCE | www.artisantg.com

VLAN (Virtual LAN) ◆ A networking environment where users on physically independent LANs are interconnected in such a way that it appears they are in the same LAN workgroup.

VP (Virtual Path) ◆ A logical pipe which can contain a group of VCs that connect network devices.

VPI (VP Identifier) ◆ A field in an ATM cell header which, when combined with the VCI, identifies the VC to the next ATM device.

WAN (Wide Area Network) ◆ A network spanning a large geographical area that provides communications among devices on a regional, national, or international basis.

workstation ◆ A networked computer typically reserved for end-user applications.

Artisan Technology Group - Quality Instrumentation ... Guaranteed | (888) 88-SOURCE | www.artisantg.com

Index

When using this index, keep in mind that a page number indicates only where referenced material begins. It may extend to the page or pages following the page referenced.

A

AF-PHY 13
ATM
  Switch 19, 20

C

caution
  handling adapter 3
  wiring connectors 15
Compu-shield connections 8, 14
connectors and cables
  installation 7, 8
  specifications 14
  UTP wiring diagrams 15

D

data rates 1

F

fiber connections 7
  specifications 14

G

grounding strap 4

H

Header, cell 18

I

interrupt pin, adapter 13

L

LED
  diagnostics 10
  faceplate 7, 8
  specification 13
  state and function 9
link LED 7, 9, 10, 13

M

mechanical specifications 14
motherboard removal 4

O

operating environment 14
Output Link (VPI/VCI) 20

P

PCI
  overview 37
pin assignments 15
power requirements 13
problems and solutions 10

S

SC Duplex connections 7, 14
SONET 13
status LED 7, 9, 10, 13
storage environment 14
Switch, ATM 19, 20
system requirements 2

T

tools required 3, 4
  warning 4
troubleshooting 9
TX/RX
  fiber connections 7
  UTP connectors 15

U

unpacking adapter 4
UTP connections 6
  specifications 14

Artisan Technology Group - Quality Instrumentation ... Guaranteed | (888) 88-SOURCE | www.artisantg.com

wiring diagrams 15

V

Virtual Circuit Connection 18
Virtual Path 19

W

warnings
electrical shock 4

Artisan Technology Group - Quality Instrumentation ... Guaranteed | (888) 88-SOURCE | www.artisantg.com

Product Registration Card

Please take a minute to register your Interphase product. This will enable us to notify you about software updates and product enhancements.

Name _____
Title _____
Company Name _____
Company Address _____
City _____
State _____ Zip _____ Country _____
Province _____
Telephone ( ) _____
Fax ( ) _____
E-mail Address _____

Which product did you purchase? _____
Serial Number _____
Where did you purchase this product (company name)? _____
Date Purchased _____

Number of client nodes at this site: _____
Operating System(s) being used with this product:

❑ Solaris ❑ SunOS ❑ AIX ❑ NetWare
❑ HP-UX ❑ IRIX ❑ Mac OS ❑ Windows NT
❑ PC NFS ❑ DEC Ultrix ❑ Other _____

Operating System Version: _____
Network Protocol(s) in use:

❑ TCP/IP ❑ IPX ❑ AppleTalk ❑ Other _____

We welcome your comments, ideas, and suggestions. You can fax additional comments to 214/654-5500, or send them to intouch@iphase.com

_____
_____
_____
_____

If you are interested in receiving information on other products from Interphase, please check the appropriate boxes:

❑ ATM ❑ FDDI ❑ SCSI ❑ Fibre Channel ❑ 100 BaseT

If you are mailing this card from outside the United States, please add postage.

11/96

Artisan Technology Group - Quality Instrumentation ... Guaranteed | (888) 88-SOURCE | www.artisantg.com

NO POSTAGE
NECESSARY
IF MAILED
IN THE
UNITED STATES

BUSINESS REPLY MAIL

FIRST-CLASS MAIL PERMIT NO. 5784 DALLAS TEXAS

POSTAGE WILL BE PAID BY ADDRESSEE

ATTN: WARRANTY DEPARTMENT
INTERPHASE CORPORATION
13800 SENLAC DR
DALLAS TX 75234-9600

4575.b : smlnrmrg.doc 56 Wed Aug 13 14:57:25 1997

Artisan Technology Group - Quality Instrumentation ... Guaranteed | (888) 88-SOURCE | www.artisantg.com

Artisan Technology Group

Artisan Technology Group is your source for quality new and certified-used/pre-owned equipment

- FAST SHIPPING AND DELIVERY
- TENS OF THOUSANDS OF IN-STOCK ITEMS
- EQUIPMENT DEMOS
- HUNDREDS OF MANUFACTURERS SUPPORTED
- LEASING/MONTHLY RENTALS
- ITAR CERTIFIED SECURE ASSET SOLUTIONS

SERVICE CENTER REPAIRS
Experienced engineers and technicians on staff at our full-service, in-house repair center

InstraView℠ REMOTE INSPECTION
Remotely inspect equipment before purchasing with our interactive website at ***www.instraview.com*** ↗

WE BUY USED EQUIPMENT
Sell your excess, underutilized, and idle used equipment
We also offer credit for buy-backs and trade-ins
www.artisantg.com/WeBuyEquipment ↗

LOOKING FOR MORE INFORMATION?
Visit us on the web at ***www.artisantg.com*** ↗ for more information on price quotations, drivers, technical specifications, manuals, and documentation

Contact us: (888) 88-SOURCE | sales@artisantg.com | www.artisantg.com