Artisan Technology Group

Artisan Technology Group is your source for quality new and certified-used/pre-owned equipment

- FAST SHIPPING AND DELIVERY
- TENS OF THOUSANDS OF IN-STOCK ITEMS
- EQUIPMENT DEMOS
- HUNDREDS OF MANUFACTURERS SUPPORTED
- LEASING/MONTHLY RENTALS
- ITAR CERTIFIED SECURE ASSET SOLUTIONS

SERVICE CENTER REPAIRS
Experienced engineers and technicians on staff at our full-service, in-house repair center

InstraView℠ REMOTE INSPECTION
Remotely inspect equipment before purchasing with our interactive website at ***www.instraview.com*** ↗

WE BUY USED EQUIPMENT
Sell your excess, underutilized, and idle used equipment
We also offer credit for buy-backs and trade-ins
www.artisantg.com/WeBuyEquipment ↗

LOOKING FOR MORE INFORMATION?
Visit us on the web at ***www.artisantg.com*** ↗ for more information on price quotations, drivers, technical specifications, manuals, and documentation

Contact us: (888) 88-SOURCE | sales@artisantg.com | www.artisantg.com

DARTControl

Software Manual

DART Ion Source
DART-100-CE
Version 2.03

Artisan Technology Group - Quality Instrumentation ... Guaranteed | (888) 88-SOURCE | www.artisantg.com

Artisan Technology Group - Quality Instrumentation ... Guaranteed | (888) 88-SOURCE | www.artisantg.com

Notice

Copyright © 2005-2007 by
IonSense, Inc.
All rights reserved.

The information in this document has been carefully checked and is believed to be reliable. Because of the innovative design of the Dart Ion Source System, specification and performance characteristics of the hardware and software described in this manual may be changed at any time without notice. Statements in this document are not intended to create any warranty, expressed or implied and any inaccurate provisions contained in this manual are inadvertent. IonSense, Inc. reserves the right to make changes in any product herein in order to improve reliability, design, or function. IonSense does not assume any liability arising from use or application of any product or circuit described within, nor does it grant any license to users under its patent rights or the rights extended to others by Ion Sense.

The apparatus and application of the apparatus described in this document is protected by US Patent Number 6,949,741 and used under license; additional patents pending.

All trademarks are properties of their respective owners.

IonSense Inc.
999 Broadway
Suite 404
Saugus, MA 01906

Artisan Technology Group - Quality Instrumentation ... Guaranteed | (888) 88-SOURCE | www.artisantg.com

Table of Contents

Introduction to the Manual....1
1. Installing DARTControl Software....1
2. Launching DARTControl Software....2
3. Operating the DART Ion Source....3
   3.1 Turning the DART Ion Source on and off....4
   3.2 Changing Electrode Polarity....4
   3.3 Opening and Editing Methods....4
      a. Opening a Method File....4
      b. Editing the Current Method File....5
      c. Saving the Current Method File....5
   3.2 Setting parameters for DART Ion Source Operation....6
      a. System Graphical Display....6
      b. Power Control....7
      c. Gas Control....7
      d. Heater Control....8
      e. System Status....8
   3.3 Running the DART Ion Source....8
4. Troubleshooting the DART Ion Source....9
   4.1 Needle Voltage Status....9
   4.2 Sparking the Needle....9
   4.3 Ion Source Message Log....9
   4.4 DART Ion Source System Status Indicators....11
Appendix....12
   A-1. Graphical Interface – the Toolbar....12
   A-2. Graphical Interface – the Menu Bar....13

Artisan Technology Group - Quality Instrumentation ... Guaranteed | (888) 88-SOURCE | www.artisantg.com

Introduction to the Manual

The ***DARTControl*** application provides full control of the IonSense DART Ion Source hardware, including method management, hardware state management, hardware status display and event logging.

This application was designed to be run on a PC equipped with a Microsoft Windows XP operating system.

This manual contains instructions for installing and operating the ***DARTControl*** software and explains in details the functions of the various software elements to assist the user in realizing the full potential of the DART Ion Source.

1. Installing DARTControl Software

Insert the IonSense CD into the computer's CD drive. If the ***DARTControl*** installer does not automatically start, click on the file **Installation.msi** in the CD directory to manually run the installer.

1. *Select the Local Power Frequency*
   The application currently supports either 60Hz. (USA) or 50Hz (Europe)

2. *Confirm the location to store Installation Files*
   The default folder assigned when downloading installation files is C:/Program Files/DARTControl. The user may choose an alternate location.

3. *Confirm the location to store Method Files*
   When saving methods, this folder will initially be selected: C:/Program Files/DARTControl/MethodFiles. The user may choose an alternate location.

4. *Confirm the location to store Log Files*
   When saving logs, this folder will initially be selected: C:/Program Files/DARTControl/LogFiles. The user may choose an alternate location.

Following completion of the installation sequence, the ***DARTControl*** application will be ready for use. A shortcut will be placed on the desktop and in the Start Menu. It is recommended that the user reboot the PC.

Artisan Technology Group - Quality Instrumentation ... Guaranteed | (888) 88-SOURCE | www.artisantg.com

2. *Launching DARTControl Software*

Double click the ***DARTControl*** software icon on the desktop to launch the ***DARTControl*** software

If the ***DARTControl*** software icon does not appear on the desktop, open the folder in which DART was installed (default C:/Program Files/DARTControl).

Click the right mouse button on the filename **DARTControl.exe**. Select *Send to Desktop* to create a desktop icon.

When launched, the ***DARTControl*** toolbar will open on your screen, as shown below. Numbered elements on the image refer to the button descriptions in Appendix A.

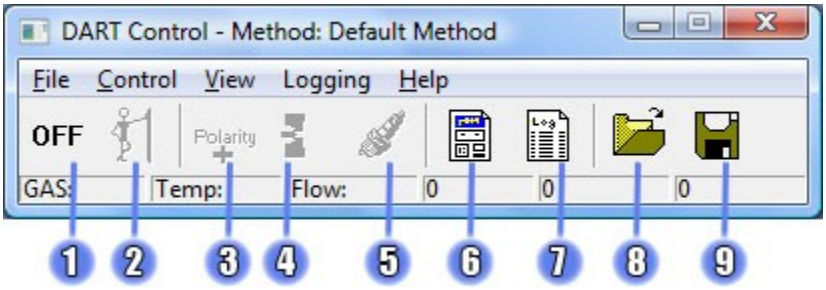

Artisan Technology Group - Quality Instrumentation ... Guaranteed | (888) 88-SOURCE | www.artisantg.com

3. *Operating the DART Ion Source*

The following flowchart describes the steps for operating and controlling the DART Ion Source. A detailed description of each of these steps is provided below.

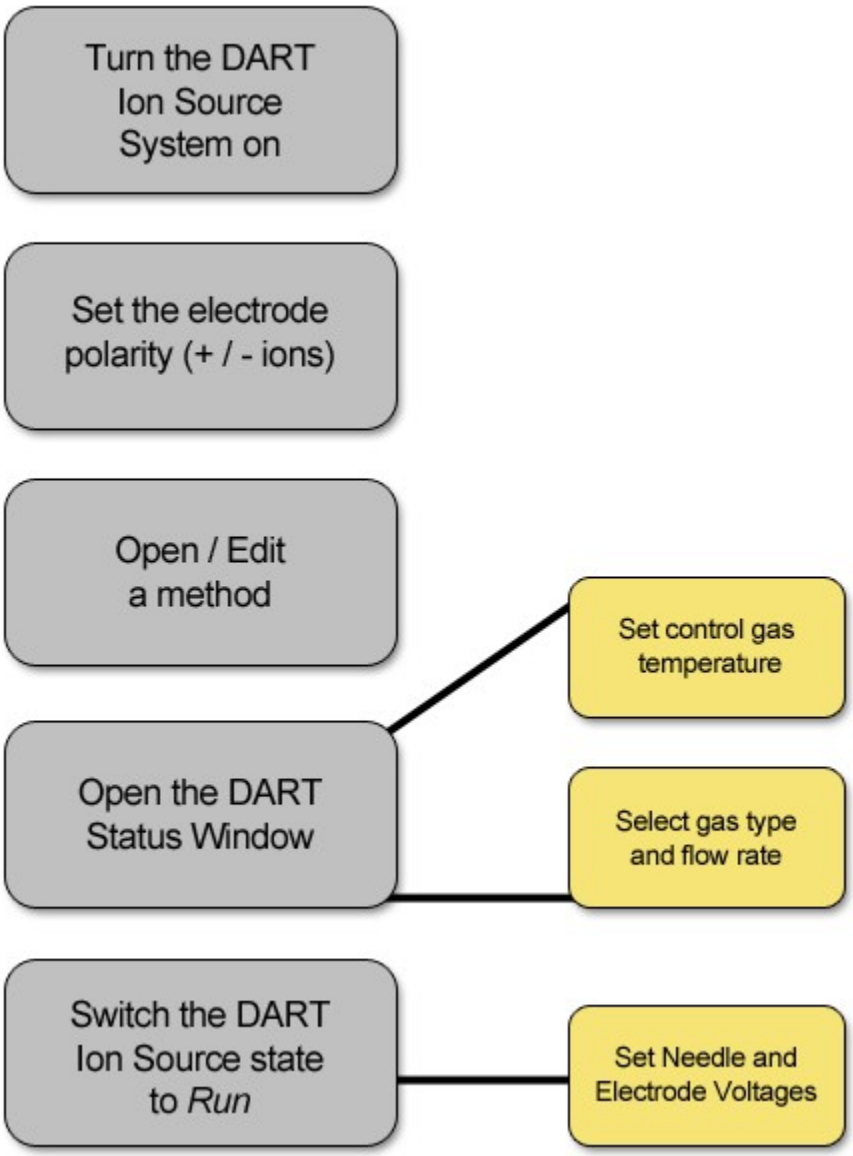

Artisan Technology Group - Quality Instrumentation ... Guaranteed | (888) 88-SOURCE | www.artisantg.com

3.1 Turning the DART Ion Source on and off

The DART Ion Source can be turned off and on by clicking the first button in the DARTControl toolbar or by selecting ***System On / Off*** in the ***Control*** menu. Turning off the system turns off and disables the voltages, heater, and gas. Turning off the system using the application **does not** power down the DART hardware.

3.2 Changing Electrode Polarity

Depending upon the desired mode of operation, while the system is on, the polarity of one or both electrodes can be reversed by clicking the polarity toolbar button. If both electrodes are positive, this button will make them both negative (and vise versa). If the grid is negative and the discharge is positive, the grid will become positive and the discharge will become negative. The polarity may also be set by entering a positive or negative number when setting the desired voltage in the **Method Editor**.

Setting both electrodes to positive is recommended for creating positive ions, while setting both to negative is recommended for creating negative ions.

3.3 Opening and Editing Methods

Methods contain predefined settings for the DART Ion Source. The method defines parameter values for operation of the DART Ion Source in both the *Standby* and *Run* states. Methods are created and modified using the Method Editor, pictured below.

a. Opening a Method File

The most recently used method opens when ***DARTControl*** launches; a new method can be created by clicking the toolbar button above or by selecting ***Load New Method*** in the ***File*** menu. When a previously saved method file is selected, it becomes the current method and the Method Editor opens to display the saved parameter values.

Artisan Technology Group - Quality Instrumentation ... Guaranteed | (888) 88-SOURCE | www.artisantg.com

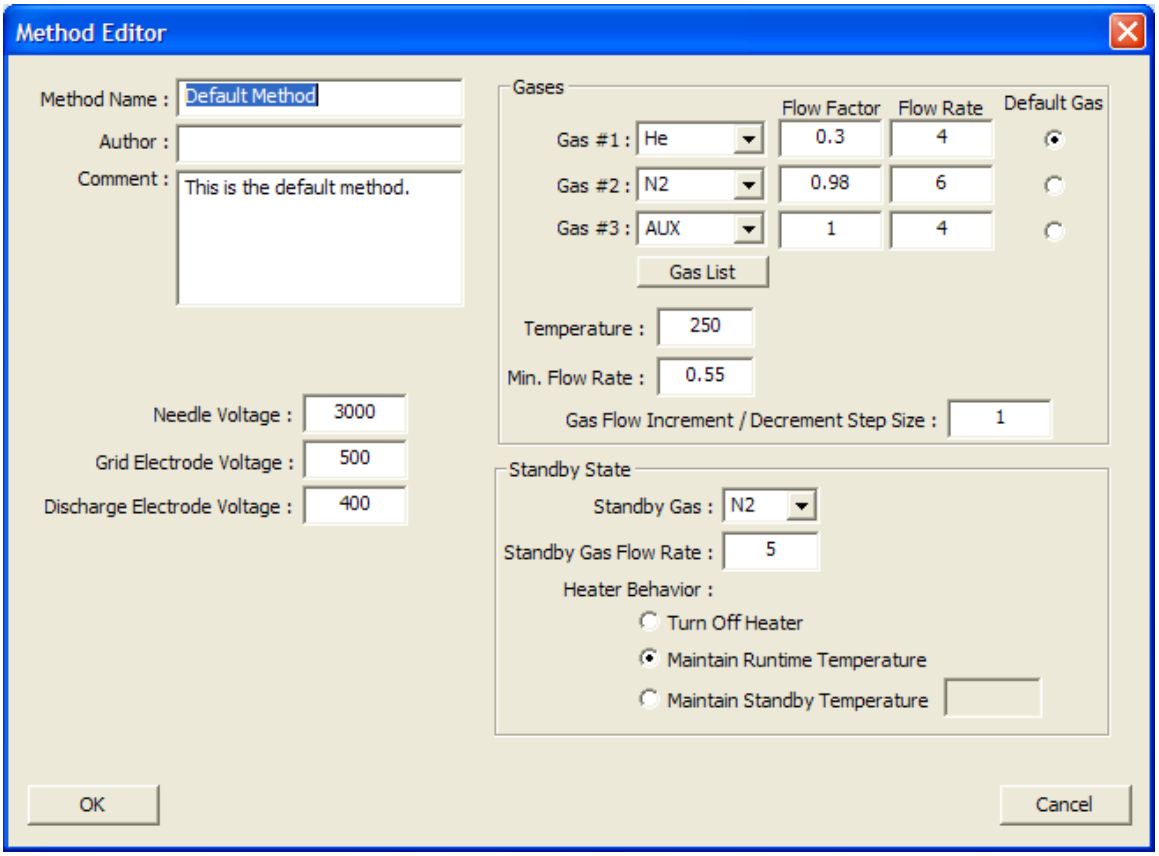

b. Editing the Current Method File

With the DART Ion Source hardware off, the current method can be edited by selecting ***Edit Current Method*** in the ***File*** menu. After changing values, click the ***OK*** button to save changes. If not saved, the changes will remain in effect until the application is closed or a different method is opened.

c. Saving the Current Method File

The current method can be saved to disk by clicking the ***Save Method*** toolbar button or selecting ***Save As…*** from the ***File*** menu if the user desires to assign a different name to the method file.

Artisan Technology Group - Quality Instrumentation ... Guaranteed | (888) 88-SOURCE | www.artisantg.com

3.2 Setting parameters for DART Ion Source Operation

The ***DART Status Window*** displays the real time status of the DART Ion Source hardware and allows the user to change some or all of the current method settings. This window can be opened or closed by clicking the **DART status** toolbar button, above, or by selecting ***DART Status*** in the ***View*** menu.

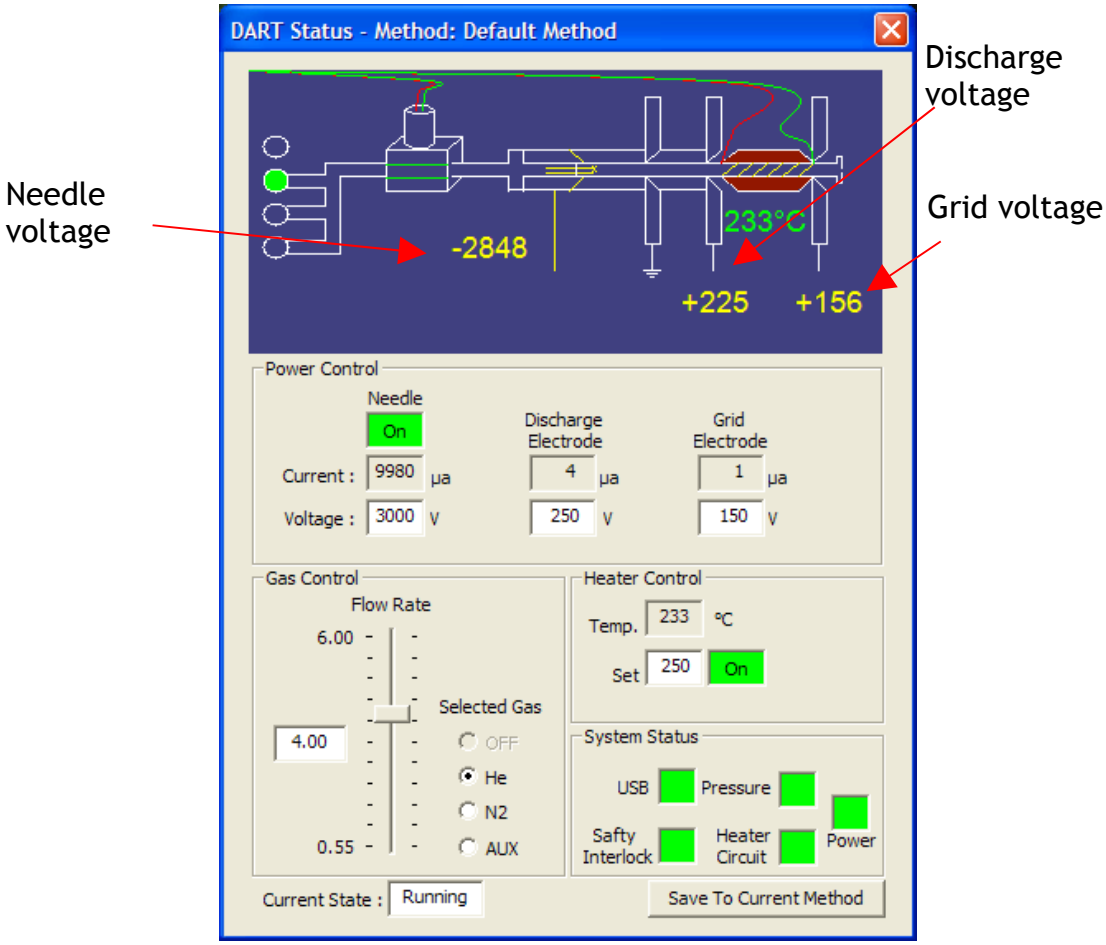

a. System Graphical Display

The upper most section of the status page contains a graphical representation of the current state and real time readings from the DART hardware. ***Note that the voltage and temperature values shown in this display are actual readings returned by the DART Controller sensors, which may not exactly correspond to the parameters defined by the current method or those entered by the user.***

Artisan Technology Group - Quality Instrumentation ... Guaranteed | (888) 88-SOURCE | www.artisantg.com

b. Power Control

●***Setting the Needle Voltage*** - If the DART Ion Source is in the *Run* state, the needle voltage can be set by entering a numeric value directly into the ***Needle Voltage*** text box. Although the number that is entered is positive, the needle voltage is actually always *negative*. The needle voltage feedback displayed in the system graphic may not exactly correspond to the voltage value entered into the edit box. The maximum voltage setting for the needle is 5,000V, but the actual voltage will typically not exceed 4,000V for N2 and 3,500 for He.

●***Enabling or Disabling the Needle Voltage*** - While in the *Run* state, the needle voltage can be turned on or off by clicking on the button located above the ***Needle Current*** display. ***Note that the needle can only be switched on if gas is flowing and no errors are detected***. If any status light is yellow or red, the needle can not be enabled until the problem is corrected.

●***Setting the Electrode Voltages*** – While the system is in the *RUN* state, the voltage for the discharge and grid electrodes can be set. These voltage values can be either positive or negative. As with the needle voltages, the electrode voltage feedback displayed in the system graphic reflects the actual sensor reading and may not exactly match the method value entered. The maximum voltage for the electrodes is +/- 650V.

c. Gas Control

When the system is in the *ON* state, the gas type and flow rate can be set. Whereas four choices (Off, He, N_2, and Aux) are available during *Standby*, an operating gas (He, N_2 or Aux) must be selected in the *Run* state. If the pressure of the selected gas source is below 35 PSI, the system will report an error, the gas will be turned off and the system will be placed in *Standby*.

The flow of the currently selected gas can be adjusted using the vertical slider or by directly entering a number. ***Note that the numbers indicated do not correspond to actual flowrate values, such as liters per minute, but rather a relative measure used by the DARTControl system***.

Artisan Technology Group - Quality Instrumentation ... Guaranteed | (888) 88-SOURCE | www.artisantg.com

d. Heater Control

When the system is in the *ON* state, the heater can be turned *ON* or *OFF* and a target temperature can be set. The maximum heater temperature is 500ºC. The *actual* gas temperature will be *lower* by the time that it comes in contact with a sample. Be advised that when switching between *Run* and *Standby*, the heater settings will be changed to those defined by the method currently in memory. If gas pressure or heater circuit errors are detected, the heater turns off.

e. System Status

The system status indicates if the DART Ion Source is functioning by monitoring five connections: USB, gas pressure, the safety interlock, the heater and the power. A green light means that the system is working normally, while a red or yellow light indicates an error. When an error occurs, high voltage turns off and cannot be turned on until the condition is corrected and all status lights return to green.

A detailed description of the *System Status* indicators is provided in the ***Troubleshooting*** section, below.

3.3 Running the DART Ion Source

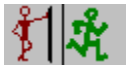

Standby | RUN

When the DART system is turned on, it is automatically put into the *Standby* state. While in *Standby*, the gas and heater settings may be changed, but the needle voltage cannot be enabled and the grid/discharge voltages cannot be set. Typically, the *Standby* state is used while preparing a sample and the *Run* state is used when analyzing the sample (primarily for the purpose of conserving gas).
Note that changing states will cause all settings to revert to those defined by the current method, for the given state.

Clicking the second button in the toolbar or selecting ***Standby / Run*** from the ***Control*** menu will put the system in the *Run* state. While running, all settings for the DART Ion Source can be controlled. The system can be returned to the *Standby* state by clicking the second toolbar button again or by selecting ***Standby / Run*** from the ***Control*** menu. If an error is detected, the system will automatically be placed into *Standby*.

Artisan Technology Group - Quality Instrumentation ... Guaranteed | (888) 88-SOURCE | www.artisantg.com

4. Troubleshooting the DART Ion Source

Status buttons in the ***DartControl*** toolbar, readouts in the ***DART Status Window*** and the ***Ion Source Message Log*** assist the user with troubleshooting problems with the DART Ion Source and the ***DARTControl*** operating software.

4.1 Needle Voltage Status

ON | OFF

This button, located on the ***DARTControl*** toolbar, is only a status indicator; it will **not** turn the needle voltage *ON* or *OFF*. The needle can only be turned *ON* and *OFF* in the ***DART Status Window*** or by selecting ***Toggle Needle Voltage*** from the ***Control*** menu. While the needle voltage is *ON* and the system is in the *Run* state, an image of the DART Ion Source with simulated "voltage" is displayed. While the needle voltage is *OFF*, an image of the DART Ion Source without the simulated voltage graphic is displayed. The actual voltage applied to the needle is displayed in the status bar. The needle voltage will turn off when an instrument error is detected. Check the ***Ion Source Message Log*** for additional information.

4.2 Sparking the Needle

Under certain circumstances, the needle may fail to respond to a command to set its voltage. In this case, the needle may need to be Sparked, which briefly applies the maximum voltage to the needle. Click on the ***DARTControl*** toolbar icon above to "Spark" the needle, which automatically ramps the voltage up to 5,000V and then back down to the current method setting.

4.3 Ion Source Message Log

As ***DARTControl*** runs, it alerts the user through a hierarchy of status messages. The three different levels are as follows:

Artisan Technology Group - Quality Instrumentation ... Guaranteed | (888) 88-SOURCE | www.artisantg.com

Error Messages generated when a critical error condition is sensed.

Warning Messages generated when something unusual occurs.

Informational Messages documenting changes under normal operations, which are hidden by default.

The *Message Log* dialog can be opened and closed by clicking the ***Message Log*** button, found in the ***DARTControl*** toolbar. The *Message Log* dialog can also be opened and closed by selecting the menu item ***Message Log*** in the ***View*** menu.

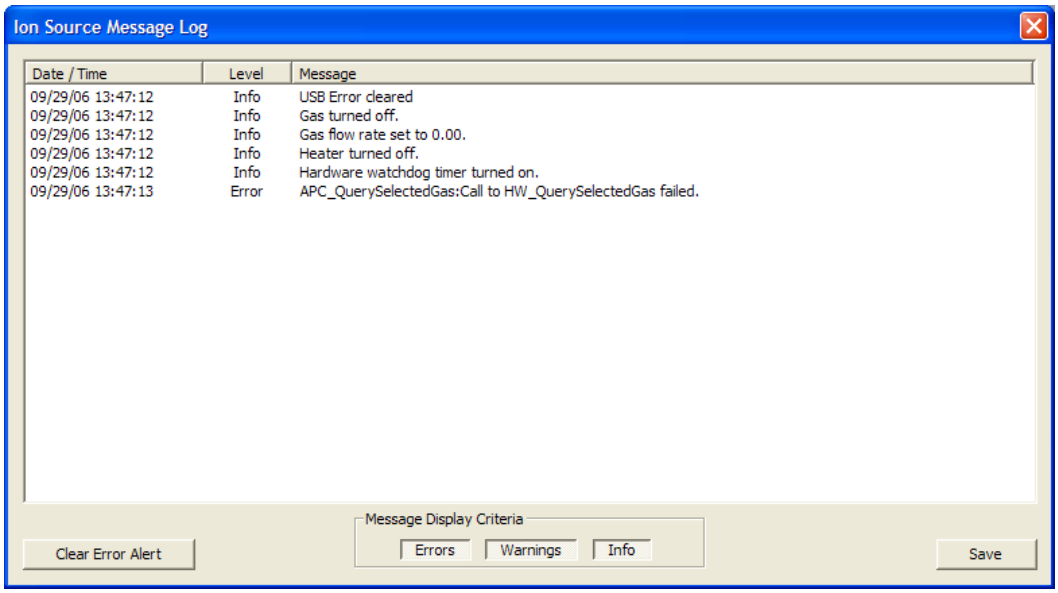

When an error occurs, the ***Message Log*** toolbar button will flash until the error condition is remedied. The error alert can be reset by opening the ***Message Log*** window and pressing the button in the bottom left corner labeled ***Clear Error Alert***.

Once opened, displayed messages can be filtered by type using the buttons in the bottom center of the window. The *Message Log* can be saved into a comma separated values (CSV) file by clicking the ***Save*** button located in the bottom right corner.

By default, the application automatically saves the *Message Log* to the local hard drive, enabling viewing of *Message Logs* from previous runs. This feature can be turned off by clearing the check box next to the ***Auto Write*** feature found under the ***Logging*** menu on the *Menu Bar*. The folder in which the files are saved is specified during the installation

Artisan Technology Group - Quality Instrumentation ... Guaranteed | (888) 88-SOURCE | www.artisantg.com

process, which by default is *C:/Program Files/DARTControl/LogFiles*. It is recommended that users keep auto-logging on and delete old log files occasionally to save disk space.

4.4 DART Ion Source System Status Indicators

The ***DART Status Window*** contains five indicators to monitor instrument function. A green light means the system is working normally, while red or yellow lights indicate an element of the DART Ion Source System is not operating properly. When an Error Message is generated, the system reverts to *Standby* mode until the error is corrected.

- **USB:** Turns **red** when the USB connection is lost. This error will cause all of the other connections to fail. Check to see that the USB cable is properly plugged into both the DART controller and the computer, and that the power is **on**. If the DART controller is turned on after the ***DARTControl*** application has started, close the program and restart.

- **Gas Pressure:** The pressure of the selected gas must be at least 35 PSI for the DART controller to operate properly. An error will be reported if the pressure drops below this value. Additionally, an error is generated when the selected gas is not connected to the back of the DART controller. A gas failure will turn off the heater. Check tank pressures and all connections between the gas tank and the DART Ion Source if this monitor indicates an error.

- **Safety Interlock:** Ensures that the DART Ion Source is properly connected and assembled. Removing the blue cover of the source will create this error. If the Safety Interlock indicator is **red**, verify that the DART Ion Source is correctly connected. Refer to the DART Ion Source Installation Manual for more information.

- **Heater Circuit:** Ensures that the heater is connected and functioning properly. If this error message appears, check that the DART Ion Source is correctly connected to the controller.

- **Power:** Makes sure that the DART controller is turned on. This error will also cause the other connections to fail. If the DART controller is turned on after the ***DARTControl*** application has started, close and restart the program.

Artisan Technology Group - Quality Instrumentation ... Guaranteed | (888) 88-SOURCE | www.artisantg.com

Appendix:

This Appendix provides a short description of menu and toolbar elements in the DartControl screen.

A-1. Graphical Interface – the Toolbar

1.Status Button

- Use this button to toggle the system status, *ON* or *OFF*.

2.Standby/Run Button

- This button changes the DART Ion Source system status between *Run* or *Standby*.

3.Anode Polarity

- This button allows for selecting positive or negative ion generation by switching polarity of the two electrodes within the DART Ion Source.

4.Needle Voltage

- Use this button to turn the needle voltage *ON* or *OFF*.

5.Spark Needle

- Click on this button to "Spark" the needle with maximum voltage.

6.DART Status

- View the status of the Dart Ion Source by using this button to open or close the ***Status Window***.

7.Message Log

- Click on this button to open the ***Message Log*** window.
- This button will flash when there is a new Error Alert. Opening the *Error Log* and clicking the ***Clear Eerror Alert*** button will stop the flashing.

8.Open Method

- Use this button to open a previously saved ***DARTControl*** method file.

9.Save Current Method

- Save the current ***DARTControl*** method settings to a file selected by the user by selecting this button.

Artisan Technology Group - Quality Instrumentation ... Guaranteed | (888) 88-SOURCE | www.artisantg.com

A-2. Graphical Interface – the Menu Bar

The ***DARTControl*** *Menu Bar* contains pulldown menus for **File**, **Control**, **View**, **Logging** and **Help** that facilitate operating the DART Ion Source. Brief descriptions of these options are provided below:

- **File Menu**
  - Edit Current Method
    - Opens the ***Method Editor***.
  - Load Method
    - Opens a previously saved method file.
  - Create New Method
    - Creates a new method file.
  - Save As...
    - Saves the current method to a user selected file.
  - Shutdown & Exit
    - Turns off voltages and exits the ***DARTControl*** program if the temperature of the DART heater is less than 200ºC.
- **Control Menu**
  - System On / Off
    - Sets system status to *ON* or *OFF*.
  - Standby / Run
    - Puts the system in *Standby* or *Run* state.
  - Toggle Needle Voltage
    - Turns the needle voltage *ON* or *OFF*.
  - Open DART Status
    - Opens the ***DART Status*** window.
  - Enable Watchdog
    - When enabled, the ***Watchdog*** continuously monitors the USB connection from the computer to the controller.
- **View**
  - DART Status
    - Opens the ***DART Status*** window.
  - Message Log
    - Opens the ***Message Log*** window.
- **Logging**
  - Auto Write
    - Enable or Disable automatic saving of log files.
- **Help**
  - About ***DARTControl***
    - Displays the version number.

Artisan Technology Group - Quality Instrumentation ... Guaranteed | (888) 88-SOURCE | www.artisantg.com

Artisan Technology Group

Artisan Technology Group is your source for quality new and certified-used/pre-owned equipment

- FAST SHIPPING AND DELIVERY
- TENS OF THOUSANDS OF IN-STOCK ITEMS
- EQUIPMENT DEMOS
- HUNDREDS OF MANUFACTURERS SUPPORTED
- LEASING/MONTHLY RENTALS
- ITAR CERTIFIED SECURE ASSET SOLUTIONS

SERVICE CENTER REPAIRS
Experienced engineers and technicians on staff at our full-service, in-house repair center

InstraView℠ REMOTE INSPECTION
Remotely inspect equipment before purchasing with our interactive website at ***www.instraview.com*** ↗

WE BUY USED EQUIPMENT
Sell your excess, underutilized, and idle used equipment
We also offer credit for buy-backs and trade-ins
www.artisantg.com/WeBuyEquipment ↗

LOOKING FOR MORE INFORMATION?
Visit us on the web at ***www.artisantg.com*** ↗ for more information on price quotations, drivers, technical specifications, manuals, and documentation

Contact us: (888) 88-SOURCE | sales@artisantg.com | www.artisantg.com