Artisan Technology Group

Artisan Technology Group is your source for quality new and certified-used/pre-owned equipment

- FAST SHIPPING AND DELIVERY
- TENS OF THOUSANDS OF IN-STOCK ITEMS
- EQUIPMENT DEMOS
- HUNDREDS OF MANUFACTURERS SUPPORTED
- LEASING/MONTHLY RENTALS
- ITAR CERTIFIED SECURE ASSET SOLUTIONS

SERVICE CENTER REPAIRS
Experienced engineers and technicians on staff at our full-service, in-house repair center

InstraView℠ REMOTE INSPECTION
Remotely inspect equipment before purchasing with our interactive website at ***www.instraview.com*** ↗

WE BUY USED EQUIPMENT
Sell your excess, underutilized, and idle used equipment
We also offer credit for buy-backs and trade-ins
www.artisantg.com/WeBuyEquipment ↗

LOOKING FOR MORE INFORMATION?
Visit us on the web at ***www.artisantg.com*** ↗ for more information on price quotations, drivers, technical specifications, manuals, and documentation

Contact us: (888) 88-SOURCE | sales@artisantg.com | www.artisantg.com

DAS-16 Series

Compatible with existing applications.
For new applications see the DAS-1600 Series.

50 to 100 Kilosample/Second
ISA-Bus Analog I/O Boards

FEATURES
- Up to 100 ksamples/s (DAS-16F)
- Up to 70 ksamples/s (DAS-16G)
- Up to 50 ksamples/s (DAS-16)
- Software-selectable input ranges (DAS-16G)
- 16 single-ended/8 differential analog inputs
- 2 channels of multiplying 12-bit D/A output
- 4 digital outputs, 4 digital inputs
- 16-bit DriverLINX software drivers for Windows 95/98—ActiveX and DLL based
- TestPoint drivers
- New start-up software included

APPLICATIONS
- Signal analysis
- FFT & frequency analysis
- Vibration analysis
- Transient analysis
- Production test
- Process control

Get "Up & Running" Quickly with Keithley's FREE Bundled Start-Up Software

up & running software

Functional Description

The DAS-16 Series consists of the DAS-16, DAS-16F, and DAS-16G high-speed analog and digital interface boards for ISA-bus compatible PCs. The boards install directly into a computer expansion slot, turning it into a high-speed, high-precision data acquisition instrument.

Each member of the DAS-16 Series has similar functionality with the following differences:
- The DAS-16 has switch selectable input ranges and a 50 ksamples/s maximum input rate.
- The DAS-16F has switch-selectable input ranges and a 100 ksamples/s maximum input rate.
- The DAS-16G1 and DAS-16G2 have software-programmable input ranges and a 70 ksamples/s maximum input rate.

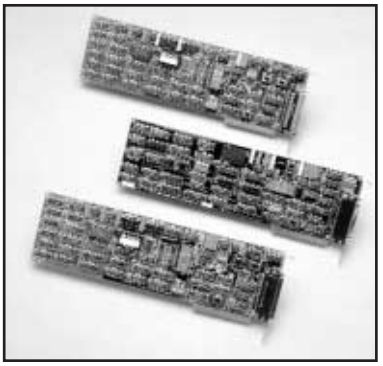

The DAS-16 Series offers 16 single-ended or 8 differential analog inputs with 12-bit resolution. The inputs are switch-selectable for unipolar (e.g., 0 to 10V) or bipolar (e.g., ±10V) input ranges.

A 3-channel programmable interval timer (Intel 8254) provides timing for the A/D or can be used for generating frequency outputs at any rate from 2.5MHz to 1 pulse/hr.

Two channels of multiplying 12-bit D/A converters provide analog outputs. The DAS-16 Series uses an onboard –5V reference for a 0 to +5V output range, or external references can be used to generate other output ranges.

Eight bits of digital I/O (4 input and 4 output) allow the DAS-16 Series to interface to a variety of digital signals. These digital bits can control multiplexers, read external status, gate the counter/timer, etc.

Software

The array of free software included with Keithley's data acquisition products helps developers get applications "Up and Running" quickly. For example, a new start-up software utility makes it possible to interact with a new board in a matter of minutes. Software drivers are provided on a CD for fast, uncomplicated installation. These 16-bit DriverLINX device drivers for Visual Basic, C/C++, and Delphi also help speed defining new applications by offering both DLL and ActiveX interfaces. A variety of useful examples and on-line help are provided with Keithley's software. Of course, Keithley's easy-to-use application development package, TestPoint, takes advantage of the DriverLINX feature set.

- FREE new bundled start-up software
- DriverLINX 16-bit Device Drivers—Visual Basic, C/C++, Delphi, TestPoint, DLL, and ActiveX
- Runs under Windows 95/98

Configuration Guide

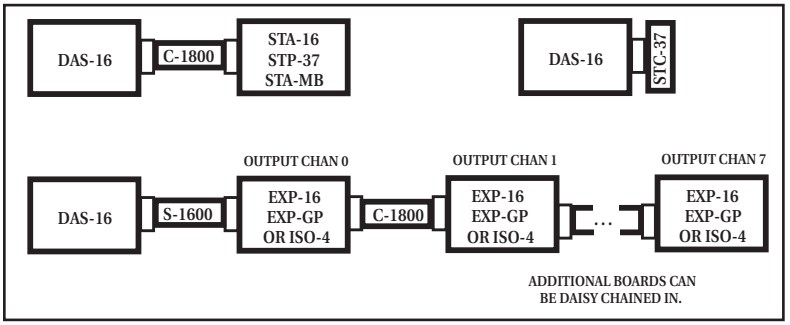

Connector Pin Assignments

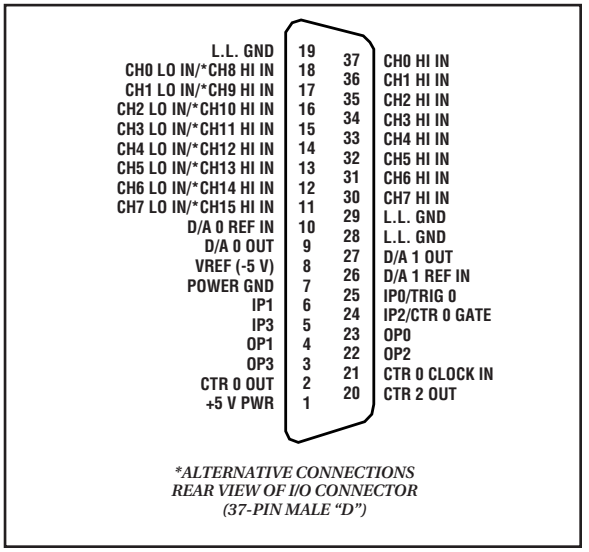

**ALTERNATIVE CONNECTIONS*
REAR VIEW OF I/O CONNECTOR
(37-PIN MALE "D")

QUESTIONS?
1-800-552-1115 (U.S. only)
Call toll free for technical assistance, product support or ordering information, or visit our website at **www.keithley.com**.

Artisan Technology Group - Quality Instrumentation ... Guaranteed | (888) 88-SOURCE | www.artisantg.com

Artisan Technology Group

Artisan Technology Group is your source for quality new and certified-used/pre-owned equipment

- FAST SHIPPING AND DELIVERY
- TENS OF THOUSANDS OF IN-STOCK ITEMS
- EQUIPMENT DEMOS
- HUNDREDS OF MANUFACTURERS SUPPORTED
- LEASING/MONTHLY RENTALS
- ITAR CERTIFIED SECURE ASSET SOLUTIONS

SERVICE CENTER REPAIRS
Experienced engineers and technicians on staff at our full-service, in-house repair center

InstraView℠ REMOTE INSPECTION
Remotely inspect equipment before purchasing with our interactive website at ***www.instraview.com*** ↗

WE BUY USED EQUIPMENT
Sell your excess, underutilized, and idle used equipment
We also offer credit for buy-backs and trade-ins
www.artisantg.com/WeBuyEquipment ↗

LOOKING FOR MORE INFORMATION?
Visit us on the web at ***www.artisantg.com*** ↗ for more information on price quotations, drivers, technical specifications, manuals, and documentation

Contact us: (888) 88-SOURCE | sales@artisantg.com | www.artisantg.com