Artisan Technology Group

Artisan Technology Group is your source for quality new and certified-used/pre-owned equipment

- FAST SHIPPING AND DELIVERY
- TENS OF THOUSANDS OF IN-STOCK ITEMS
- EQUIPMENT DEMOS
- HUNDREDS OF MANUFACTURERS SUPPORTED
- LEASING/MONTHLY RENTALS
- ITAR CERTIFIED SECURE ASSET SOLUTIONS

SERVICE CENTER REPAIRS
Experienced engineers and technicians on staff at our full-service, in-house repair center

InstraView℠ REMOTE INSPECTION
Remotely inspect equipment before purchasing with our interactive website at ***www.instraview.com*** ↗

WE BUY USED EQUIPMENT
Sell your excess, underutilized, and idle used equipment
We also offer credit for buy-backs and trade-ins
www.artisantg.com/WeBuyEquipment ↗

LOOKING FOR MORE INFORMATION?
Visit us on the web at ***www.artisantg.com*** ↗ for more information on price quotations, drivers, technical specifications, manuals, and documentation

Contact us: (888) 88-SOURCE | sales@artisantg.com | www.artisantg.com

FieldPoint™ Operating Instructions

FP-DI-330 and cFP-DI-330

Eight-Channel Universal Digital Input Module

These operating instructions describe how to install and use the National Instruments FP-DI-330 and cFP-DI-330 digital input modules (referred to inclusively as the [c]FP-DI-330). For information about configuring and accessing the [c]FP-DI-330 over a network, refer to the user manual for the FieldPoint network module you are using.

Features

The [c]FP-DI-330 is a FieldPoint digital input module with the following features:

- Eight digital input channels
- Universal inputs that work with any voltage from 5 V TTL level up to 250 VDC/VAC
- Compatibility with sourcing, sinking, or power-sensing applications
- On/Off LED indicators
- 250 V_{rms} CAT II continuous channel-to-ground isolation, verified by 2,300 V_{rms}, 1 minute dielectric withstand test
- –40 to 70 °C operation
- Hot swappable

Installing the FP-DI-330

The FP-DI-330 mounts on a FieldPoint terminal base (FP-TB-*x*), which provides operating power to the module. Installing the FP-DI-330 onto a powered terminal base does not disrupt the operation of the bank.

Artisan Technology Group - Quality Instrumentation ... Guaranteed | (888) 88-SOURCE | www.artisantg.com

To install the FP-DI-330, refer to Figure 1 and complete the following steps:

1. Slide the terminal base key to position X.
2. Align the FP-DI-330 alignment slots with the guide rails on the terminal base.
3. Press firmly to seat the FP-DI-330 on the terminal base. When the module is firmly seated, the terminal base latch locks it into place.

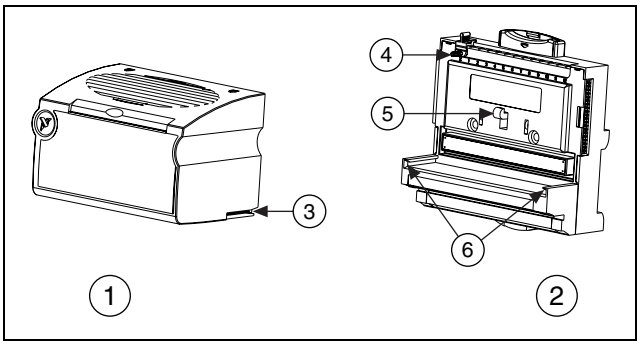

1	I/O Module	4	Key
2	Terminal Base	5	Latch
3	Alignment Slot	6	Guide Rails

Figure 1. Installing the FP-DI-330

Installing the cFP-DI-330

The cFP-DI-330 mounts on a Compact FieldPoint backplane (cFP-BP-*x*), which provides operating power to the module. Installing the cFP-DI-330 onto a powered backplane does not disrupt the operation of the bank.

To install the cFP-DI-330, refer to Figure 2 and complete the following steps:

1. Align the captive screws on the cFP-DI-330 with the holes on the backplane. The alignment keys on the cFP-DI-330 prevent backward insertion.
2. Press firmly to seat the cFP-DI-330 on the backplane.
3. Using a number 2 Phillips screwdriver with a shank of at least 64 mm (2.5 in.) length, tighten the captive screws to 1.1 N · m

Artisan Technology Group - Quality Instrumentation ... Guaranteed | (888) 88-SOURCE | www.artisantg.com

(10 lb · in.) of torque. The nylon coating on the screws prevents them from loosening.

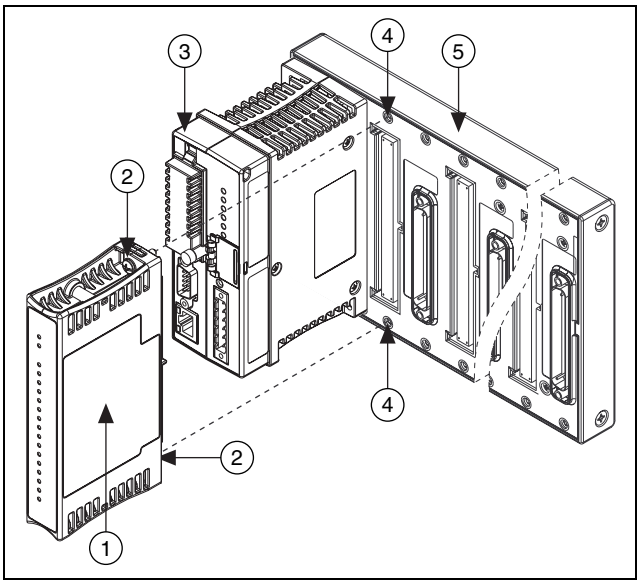

1	cFP I/O Module	4	Screw Holes
2	Captive Screws	5	cFP Backplane
3	cFP Controller Module		

Figure 2. Installing the cFP-DI-330

Wiring the [c]FP-DI-330

The FP-TB-*x* terminal base has connections for each FP-DI-330 input channel and for an external supply to power field devices. The cFP-CB-*x* connector block provides the same connections for the cFP-DI-330. You can wire each channel to a switch, a sourcing-output device, a sinking-output device, or a load.

Each channel has two input terminals, IN_a and IN_b; a supply terminal, V_{SUP}; and a common terminal, COM. All eight COM terminals are internally connected to each other and to the C terminals. All eight V_{SUP} terminals are internally connected to each other and to the V terminals.

Artisan Technology Group - Quality Instrumentation ... Guaranteed | (888) 88-SOURCE | www.artisantg.com

You can use a 5–250 VDC external power supply to power field devices. Connect the positive lead of the external power supply to both V terminals and the negative lead to both C terminals. Ensure that the current through both V terminals can never exceed 2 A.

Install 2 A maximum, fast-acting fuses between the external power supply and the V terminals. The wiring diagrams in this document show fuses where appropriate.

Table 1 lists the terminal assignments for the signals associated with each channel. The terminal assignments are the same for the FP-TB-*x* terminal bases and the cFP-CB-*x* connector blocks.

Table 1. Terminal Assignments

Channel	Terminal Numbers			
	IN_a	IN_b	V_{SUP}	COM
0	1	2	17	18
1	3	4	19	20
2	5	6	21	22
3	7	8	23	24
4	9	10	25	26
5	11	12	27	28
6	13	14	29	30
7	15	16	31	32

If you are using the cFP-DI-330 in a *hazardous voltage* application, you must use the cFP-CB-1 connector block or a suitable hazardous voltage cable. A hazardous voltage is a voltage greater than 42.4 V_{peak} or 60 VDC.

Caution Ensure that hazardous voltage wiring is performed only by qualified personnel adhering to local electrical standards.

Caution Do *not* mix circuits with hazardous voltages and human-accessible circuits on the same module.

Caution Cascading power between two modules defeats isolation between those modules. Cascading power from the network module defeats all isolation between modules in the FieldPoint bank.

Artisan Technology Group - Quality Instrumentation ... Guaranteed | (888) 88-SOURCE | www.artisantg.com

Connecting Devices to the [c]FP-DI-330

Figure 3 shows how to connect several types of devices to channels of the [c]FP-DI-330. Devices connected to V_{SUP} and COM share a common potential.

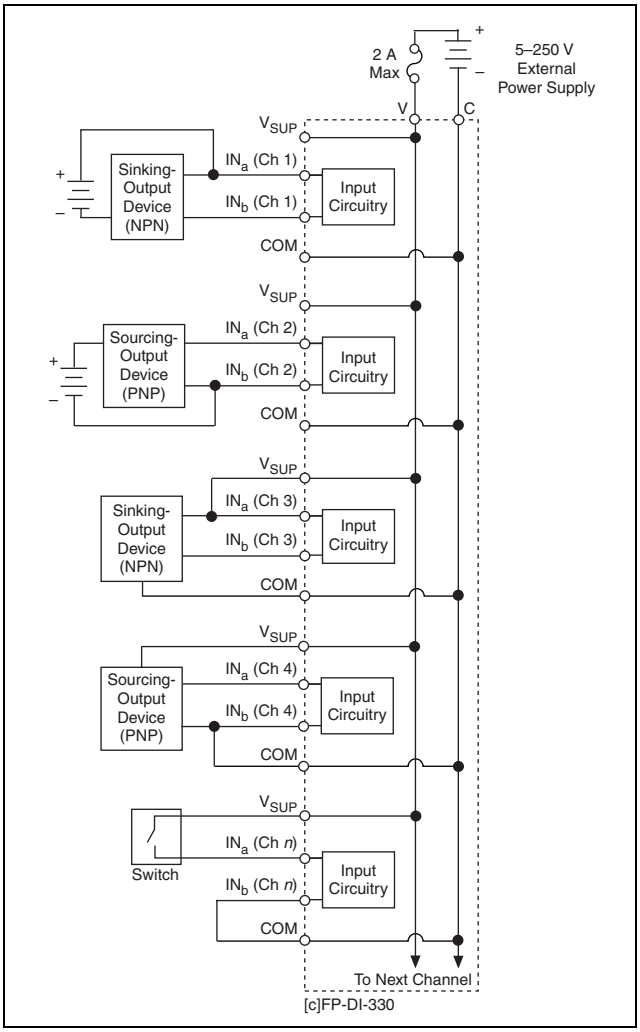

Figure 3. Connecting Devices to the [c]FP-DI-330

Artisan Technology Group - Quality Instrumentation ... Guaranteed | (888) 88-SOURCE | www.artisantg.com

Connecting a Switch to the [c]FP-DI-330

You can connect limit or control switches to the [c]FP-DI-330. Connect a power supply to the V and C terminals of the [c]FP-DI-330. Connect the IN_a and the V_{SUP} terminals to the switch.

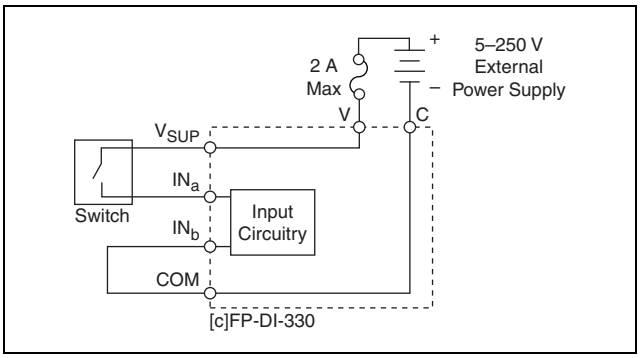

Figure 4. Wiring the [c]FP-DI-330 to a Switch

Connecting a Sourcing-Output Device to the [c]FP-DI-330

To connect a sourcing-output device to the [c]FP-DI-330, connect a power supply to the V and C terminals of the [c]FP-DI-330. Connect the V_{SUP}, IN_a, IN_b, and COM terminals to the sourcing-output device.

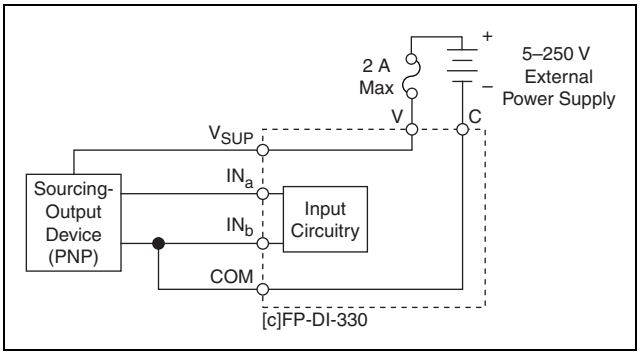

Figure 5. Wiring the [c]FP-DI-330 to a Sourcing-Output Device

Artisan Technology Group - Quality Instrumentation ... Guaranteed | (888) 88-SOURCE | www.artisantg.com

If the sourcing-output device is connected to a power supply, connect the power supply to the IN_b terminal of the [c]FP-DI-330.

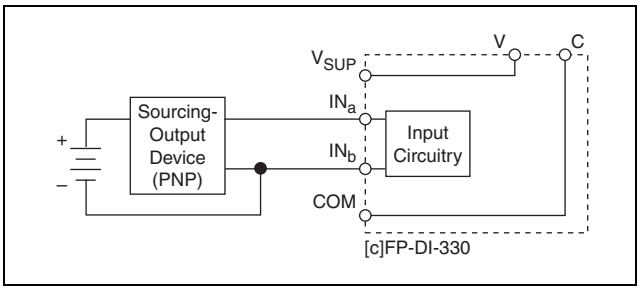

Figure 6. Wiring the [c]FP-DI-330 to an Externally Powered Sourcing-Output Device

Connecting a Sinking-Output Device to the [c]FP-DI-330

To connect a sinking-output device to the [c]FP-DI-330, connect a power supply to the V and C terminals of the [c]FP-DI-330. Connect the V_{SUP}, IN_a, IN_b, and COM terminals to the sinking-output device.

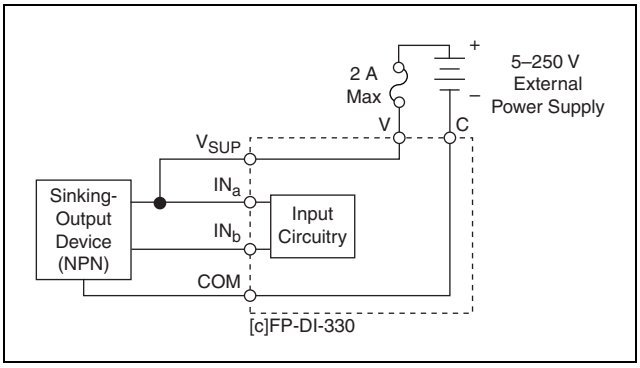

Figure 7. Wiring the [c]FP-DI-330 to a Sinking-Output Device

Artisan Technology Group - Quality Instrumentation ... Guaranteed | (888) 88-SOURCE | www.artisantg.com

If the sinking-output device is connected to a power supply, connect the power supply to the IN_a terminal of the [c]FP-DI-330.

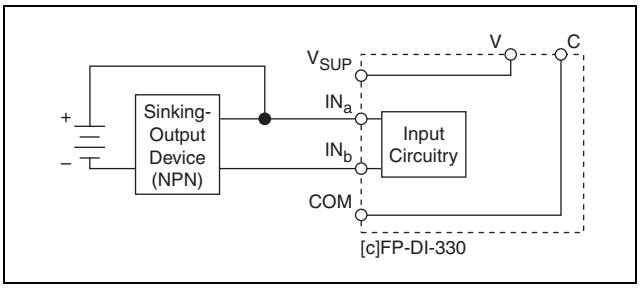

Figure 8. Wiring the [c]FP-DI-330 to an Externally Powered Sinking-Output Device

Connecting a Load to the [c]FP-DI-330

If you want to use the [c]FP-DI-330 to sense the power that is applied to a load, connect the IN_a and IN_b terminals to the load.

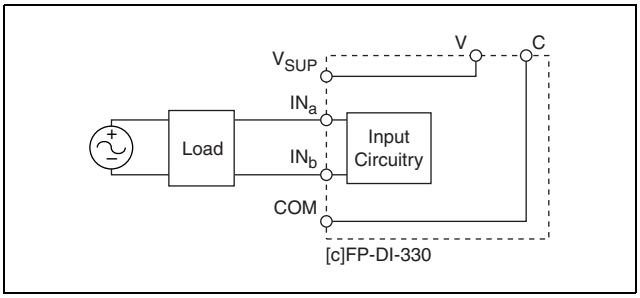

Figure 9. Wiring the [c]FP-DI-330 to a Load

Universal Input Circuit

The [c]FP-DI-330 has eight current-limited universal input channels with bi-directional optical isolators. Each channel has two interchangeable signal inputs, IN_a and IN_b. When you apply a voltage across the IN_a and IN_b terminals, signal current flows through the input circuitry and turns on the optical isolator, registering as an ON condition. The current-limiting circuitry limits the amount of current flow to 1.5 mA.

Artisan Technology Group - Quality Instrumentation ... Guaranteed | (888) 88-SOURCE | www.artisantg.com

Figure 10 shows the input circuitry for a single channel.

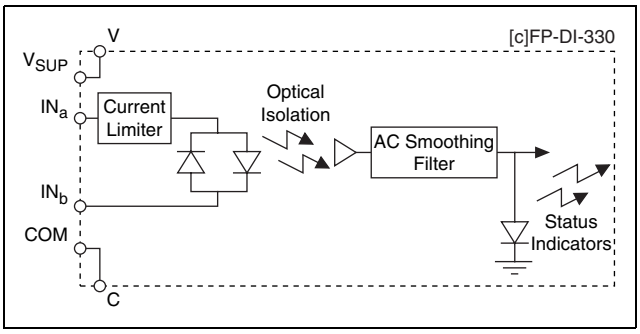

Figure 10. [c]FP-DI-330 Input Circuit

Sensing DC Voltages

When an external device applies a positive or negative DC voltage with a magnitude of at least 4 V across the IN_a and IN_b terminals, the [c]FP-DI-330 registers an ON condition. The [c]FP-DI-330 limits the current drawn by the input circuit to approximately 1.5 mA for voltages up to 250 V.

When an external device applies a voltage with a magnitude of less than 1 V to the IN_a and IN_b terminals, the [c]FP-DI-330 registers an OFF condition. When the external device applies a voltage between –4 and –1 V or between 1 and 4 V, the [c]FP-DI-330 may or may not register an ON condition.

Ensure that the devices you connect to the [c]FP-DI-330 have OFF-state leakage currents lower than 350 µA. Higher leakage currents can cause false ON readings.

The filter on the [c]FP-DI-330 inputs cause a delay of approximately 1.2 ms between the time a voltage changes from the ON state to the OFF state and the time the [c]FP-DI-330 recognizes the change. The delay for a transition from an OFF to an ON state is approximately 0.2 µs.

Sensing AC Voltages

The [c]FP-DI-330 senses a wide range of AC signals. The minimum ON-state voltage for an AC signal depends on the frequency of the signal. When an external device applies a voltage between 1 V and the minimum ON-state voltage across the input terminals, the channel may or may not register an ON condition.

Artisan Technology Group - Quality Instrumentation ... Guaranteed | (888) 88-SOURCE | www.artisantg.com

The AC smoothing filter shown in Figure 10 ensures that the channel remains ON if the signal frequency is higher than 50 Hz and the signal voltage is higher than the minimum ON state. Refer to the *Specifications* section for more information about minimum ON-state voltages and digital logic levels.

Status Indicators

Figure 11 shows the status indicator LEDs on the [c]FP-DI-330.

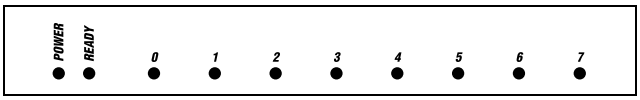

Figure 11. Status Indicators

The [c]FP-DI-330 has two green status LEDs, **POWER** and **READY**. After you insert the [c]FP-DI-330 into a terminal base or backplane and apply power to the connected network module, the green **POWER** indicator lights and the [c]FP-DI-330 informs the network module of its presence. When the network module recognizes the [c]FP-DI-330, it sends initial configuration information to the [c]FP-DI-330. After the [c]FP-DI-330 receives this initial information, the green **READY** indicator lights and the module is in normal operating mode.

In addition to the green **POWER** and **READY** indicators, each channel has a numbered green status indicator that lights when the channel is in the ON state.

Isolation and Safety Guidelines

Caution Read the following information before attempting to connect the [c]FP-DI-330 to any circuits that may contain hazardous voltages.

This section describes the isolation of the [c]FP-DI-330 and its compliance with international safety standards. The field wiring connections are isolated from the backplane and the inter-module communication bus. The isolation barriers in the module provide 250 V_{rms} Installation Category II continuous isolation, verified by 2,300 V_{rms}, 1 minute dielectric withstand test. The [c]FP-DI-330 provides *double insulation* (compliant with IEC 61010-1) for

Artisan Technology Group - Quality Instrumentation ... Guaranteed | (888) 88-SOURCE | www.artisantg.com

working voltages of 250 V_{rms}[1]. Safety standards (such as those published by UL and IEC) require the use of double insulation between hazardous voltages and any human-accessible parts or circuits.

Never try to use any isolation product between human-accessible parts (such as DIN rails or monitoring stations) and circuits that can be at hazardous potentials under normal conditions, unless the product is specifically designed for such an application, as is the [c]FP-DI-330.

Even though the [c]FP-DI-330 is designed to handle applications with hazardous potentials, follow these guidelines to ensure a safe total system:

- There is no safety isolation between channels on the [c]FP-DI-330. If a hazardous voltage is present on any channel, all channels are considered hazardous. Make sure that all other devices and circuits connected to the module are properly insulated from human contact.
- Do *not* share the external supply voltages (the V and C terminals) with other devices (including other FieldPoint devices), unless those devices are isolated from human contact.
- For Compact FieldPoint, you *must* connect the protective earth (PE) ground terminal on the cFP-BP-*x* backplane to the system safety ground. The backplane PE ground terminal has the following symbol stamped beside it: ⏚. Connect the backplane PE ground terminal to the system safety ground using 14 AWG (1.6 mm) wire with a ring lug. Use the 5/16 in. panhead screw shipped with the backplane to secure the ring lug to the backplane PE ground terminal.
- As with any hazardous voltage wiring, make sure that all wiring and connections meet applicable electrical codes and commonsense practices. Mount terminal bases and backplanes in an area, position, or cabinet that prevents accidental or unauthorized access to wiring that carries hazardous voltages.
- Do *not* use the [c]FP-DI-330 as the only isolating barrier between human contact and working voltages higher than 250 V_{rms}.

[1] *Working voltage* is defined as the signal voltage plus the common-mode voltage. *Common-mode voltage* is the voltage of the module with respect to ground.

Artisan Technology Group - Quality Instrumentation ... Guaranteed | (888) 88-SOURCE | www.artisantg.com

- Operate the [c]FP-DI-330 only at or below Pollution Degree 2. Pollution Degree 2 means that only nonconductive pollution occurs in most cases. Occasionally, however, a temporary conductivity caused by condensation must be expected.
- Do *not* operate FieldPoint products in an explosive atmosphere or where there may be flammable gases or fumes. If you need to operate FieldPoint products in such an environment, the FieldPoint products *must* be in a suitably rated enclosure.
- Operate the [c]FP-DI-330 at or below Installation Category II. Installation Category II is for measurements performed on circuits directly connected to the low-voltage installation. This category refers to local-level distribution, such as that provided by a standard wall outlet.

Specifications

The following specifications are typical for the range –40 to 70 °C unless otherwise noted. Specifications are subject to change without notice.

Input Characteristics

Number of channels 8

Compatibility ..... TTL, CMOS, 24 VDC, 48 VDC, 120/240 VAC

Maximum input voltage..... 250 VAC or 250 VDC

Digital logic levels

Logic Level	Minimum	Maximum
OFF state		
DC	—	±1 V
peak AC	—	±1 V
ON state		
DC	±4 VDC	±250 VDC
50/60 Hz AC	15 VAC	250 VAC
1 kHz AC	3 VAC	250 VAC

Artisan Technology Group - Quality Instrumentation ... Guaranteed | (888) 88-SOURCE | www.artisantg.com

Input current limiting ..... 1.5 mA

Input delay time ..... 1.2 ms

Physical Characteristics

Indicators ..... Green **POWER** and **READY** indicators, 8 green input state indicators

Weight

FP-DI-330..... 130 g (4.5 oz)

cFP-DI-330..... 100 g (3.4 oz)

Power Requirements

Power from network module ..... 200 mW

Isolation Voltage

Channel-to-ground isolation

Continuous ..... 250 V_{rms}, Installation Category II

Dielectric withstand..... 2,300 V_{rms}, 1 minute

Channel-to-channel isolation ..... None

Environmental

FieldPoint modules are intended for indoor use only. For outdoor use, they must be mounted inside a sealed enclosure.

Operating temperature ..... –40 to 70 °C

Storage temperature ..... –55 to 85 °C

Humidity ..... 10 to 90% RH, noncondensing

Maximum altitude..... 2,000 m; at higher altitudes the isolation voltage ratings must be lowered

Pollution Degree 2

Artisan Technology Group - Quality Instrumentation ... Guaranteed | (888) 88-SOURCE | www.artisantg.com

Shock and Vibration

These specifications apply only to the cFP-DI-330. NI recommends Compact FieldPoint if your application is subject to shock and vibration.

Operating vibration, random (IEC 60068-2-64)..... 10–500 Hz, 5 g_{rms}

Operating vibration, sinusoidal (IEC 60068-2-6)..... 10–500 Hz, 5 g

Operating shock (IEC 60068-2-27)..... 50 g, 3 ms half sine, 18 shocks at 6 orientations; 30 g, 11 ms half sine, 18 shocks at 6 orientations

Safety

This product is designed to meet the requirements of the following standards of safety for electrical equipment for measurement, control, and laboratory use:

- IEC 61010-1, EN 61010-1
- UL 3121-1, UL 61010C-1
- CAN/CSA C22.2 No. 1010.1

For UL, hazardous location, and other safety certifications, refer to the product label or visit `ni.com/hardref.nsf`, search by model number or product line, and click the appropriate link in the Certification column.

Electromagnetic Compatibility

CE, C-Tick, and FCC Part 15 (Class A) Compliant

Emissions..... EN 55011 Class A at 10 m
FCC Part 15A above 1 GHz

Immunity..... EN 61326-1:1997 + A2:2001, Table 1

Note For EMC compliance, operate this device with shielded cabling.

Artisan Technology Group - Quality Instrumentation ... Guaranteed | (888) 88-SOURCE | www.artisantg.com

CE Compliance

This product meets the essential requirements of applicable European Directives, as amended for CE marking, as follows:

Low-Voltage Directive (safety)..... 73/23/EEC

Electromagnetic Compatibility
Directive (EMC) 89/336/EEC

Note Refer to the Declaration of Conformity (DoC) for this product for any additional regulatory compliance information. To obtain the DoC for this product, visit `ni.com/hardref.nsf`, search by model number or product line, and click the appropriate link in the Certification column.

Mechanical Dimensions

Figure 12 shows the mechanical dimensions of the FP-DI-330 installed on a terminal base. If you are using the cFP-DI-330, refer to your Compact FieldPoint controller user manual for the dimensions and cabling clearance requirements of the Compact FieldPoint system.

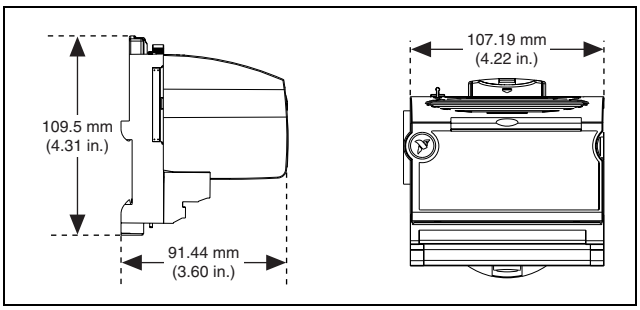

Figure 12. FP-DI-330 Mechanical Dimensions

Artisan Technology Group - Quality Instrumentation ... Guaranteed | (888) 88-SOURCE | www.artisantg.com

Where to Go for Support

For more information about setting up the FieldPoint system, refer to these National Instruments documents:

- FieldPoint network module user manual
- Other FieldPoint I/O module operating instructions
- FieldPoint terminal base and connector block operating instructions

Go to `ni.com/support` for the most current manuals, examples, and troubleshooting information.

National Instruments corporate headquarters is located at 11500 North Mopac Expressway, Austin, Texas, 78759-3504. National Instruments also has offices located around the world to help address your support needs. For telephone support in the United States, create your service request at `ni.com/support` and follow the calling instructions or dial 512 795 8248. For telephone support outside the United States, contact your local branch office:

Australia 1800 300 800, Austria 43 0 662 45 79 90 0,
Belgium 32 0 2 757 00 20, Brazil 55 11 3262 3599,
Canada (Calgary) 403 274 9391, Canada (Ottawa) 613 233 5949,
Canada (Québec) 450 510 3055, Canada (Toronto) 905 785 0085,
Canada (Vancouver) 514 685 7530, China 86 21 6555 7838,
Czech Republic 420 224 235 774, Denmark 45 45 76 26 00,
Finland 385 0 9 725 725 11, France 33 0 1 48 14 24 24,
Germany 49 0 89 741 31 30, Greece 30 2 10 42 96 427,
India 91 80 51190000, Israel 972 0 3 6393737,
Italy 39 02 413091, Japan 81 3 5472 2970,
Korea 82 02 3451 3400, Malaysia 603 9131 0918,
Mexico 001 800 010 0793, Netherlands 31 0 348 433 466,
New Zealand 0800 553 322, Norway 47 0 66 90 76 60,
Poland 48 22 3390150, Portugal 351 210 311 210,
Russia 7 095 783 68 51, Singapore 65 6226 5886,
Slovenia 386 3 425 4200, South Africa 27 0 11 805 8197,
Spain 34 91 640 0085, Sweden 46 0 8 587 895 00,
Switzerland 41 56 200 51 51, Taiwan 886 2 2528 7227,
Thailand 662 992 7519, United Kingdom 44 0 1635 523545

FieldPoint™, National Instruments™, NI™, and ni.com™ are trademarks of National Instruments Corporation. Product and company names mentioned herein are trademarks or trade names of their respective companies. For patents covering National Instruments products, refer to the appropriate location: **Help»Patents** in your software, the `patents.txt` file on your CD, or `ni.com/patents`.

© 2002–2004 National Instruments Corp. All rights reserved.

323301C-01 May04

Artisan Technology Group - Quality Instrumentation ... Guaranteed | (888) 88-SOURCE | www.artisantg.com

Artisan Technology Group

Artisan Technology Group is your source for quality new and certified-used/pre-owned equipment

- FAST SHIPPING AND DELIVERY
- TENS OF THOUSANDS OF IN-STOCK ITEMS
- EQUIPMENT DEMOS
- HUNDREDS OF MANUFACTURERS SUPPORTED
- LEASING/MONTHLY RENTALS
- ITAR CERTIFIED SECURE ASSET SOLUTIONS

SERVICE CENTER REPAIRS
Experienced engineers and technicians on staff at our full-service, in-house repair center

InstraView℠ REMOTE INSPECTION
Remotely inspect equipment before purchasing with our interactive website at ***www.instraview.com*** ↗

WE BUY USED EQUIPMENT
Sell your excess, underutilized, and idle used equipment
We also offer credit for buy-backs and trade-ins
www.artisantg.com/WeBuyEquipment ↗

LOOKING FOR MORE INFORMATION?
Visit us on the web at ***www.artisantg.com*** ↗ for more information on price quotations, drivers, technical specifications, manuals, and documentation

Contact us: (888) 88-SOURCE | sales@artisantg.com | www.artisantg.com