Artisan Technology Group

Artisan Technology Group is your source for quality new and certified-used/pre-owned equipment

- FAST SHIPPING AND DELIVERY
- TENS OF THOUSANDS OF IN-STOCK ITEMS
- EQUIPMENT DEMOS
- HUNDREDS OF MANUFACTURERS SUPPORTED
- LEASING/MONTHLY RENTALS
- ITAR CERTIFIED SECURE ASSET SOLUTIONS

SERVICE CENTER REPAIRS
Experienced engineers and technicians on staff at our full-service, in-house repair center

InstraView℠ REMOTE INSPECTION
Remotely inspect equipment before purchasing with our interactive website at ***www.instraview.com*** ↗

WE BUY USED EQUIPMENT
Sell your excess, underutilized, and idle used equipment
We also offer credit for buy-backs and trade-ins
www.artisantg.com/WeBuyEquipment ↗

LOOKING FOR MORE INFORMATION?
Visit us on the web at ***www.artisantg.com*** ↗ for more information on price quotations, drivers, technical specifications, manuals, and documentation

Contact us: (888) 88-SOURCE | sales@artisantg.com | www.artisantg.com

S Series Multifunction DAQ – up to 16-Bit, up to 3 MS/s per Channel, up to 8 Analog Inputs

NI 6123, NI 6122, NI 6133, NI 6132

- 4 or 8 simultaneous-sampling differential analog inputs
- 14- or 16-bit resolution
- 3 MS/s[1] or 500 kS/s per channel maximum sampling rate
- 4 analog input ranges
- Deep onboard memory – 16 or 32 MS
- 8 digital I/O lines (5 V/TTL/CMOS); two 24-bit counter/timers
- Digital and analog triggering
- Measurement services that simplify configuration and measurements

Operating Systems

- Windows 2000/NT/XP

Recommended NI Software

- LabVIEW 7.x or higher
- LabWindows/CVI 7.x or higher
- Measurement Studio 7.x or higher
- Digital Waveform Editor
- SignalExpress 1.x or higher

Other Compatible Software

- VI Logger 2.x or higher
- Visual Studio .NET
- Visual Basic, C/C++, and C#

Measurement Services Software (included)

- NI-DAQmx driver
- Measurement & Automation Explorer configuration utility
- VI Logger Lite data-logging software

Calibration Certificate Available

Family	Bus	Analog Inputs	Input Resolution (bits)	Sampling Rate	Input Ranges	Digital I/O	Counter/Timers	Trigger
NI 6123	PCI, PXI	8	16	500 kS/s per channel	4	8 @ 10 MHz	2, 24-bit	Analog, digital
NI 6122	PCI, PXI	4	16	500 kS/s per channel	4	8 @ 10 MHz	2, 24-bit	Analog, digital
NI 6133	PCI, PXI	8	14	3 MS/s per channel[1]	4	8 @ 10 MHz	2, 24-bit	Analog, digital
NI 6132	PCI, PXI	4	14	3 MS/s per channel[1]	4	8 @ 10 MHz	2, 24-bit	Analog, digital

[1]2.5 MS/s with NI-DAQmx; 3 MS/s with additional download. Special conditions apply.

Table 1. Channel, Speed, and Resolution Specifications

Overview and Applications

National Instruments 612x and 613x devices combine the latest in PC technologies to deliver simultaneous sampling for high-channel-count, high-speed applications. Use these modules in a variety of applications, including:

- IF digitization
- Transient recording
- ISDN, ADSL, and POTS manufacturing test in the telecom industry
- Ultrasound and sonar testing
- High-energy physics

Features

These devices fall under the NI S Series product family. The "S" stands for simultaneous sampling, as this is the most apparent benefit of the dedicated analog-to-digital (A/D) converter per channel architecture. However, the architecture has other less obvious but very important advantages.

More Data Throughput – The dedicated A/D converter per channel architecture provides a much higher aggregate sampling rate compared to traditional multiplexed data acquisition devices. Traditional multiplexed data acquisition devices share one A/D converter among multiple channels, keeping the aggregate data throughput constant, regardless of the number of active channels. S Series aggregate data throughput increases linearly with the number of active channels.

Better Dynamic Specifications – The analog input path on S Series devices is tuned for both accurate DC and dynamic measurements, compared to traditional multiplexed data acquisition devices that suffer from settling time and distortion error created by switching the input channel. Traditional multiplexed data acquisition devices are ideal for DC measurements, but are not the best solution for dynamic measurements.

Many Input Ranges – You can configure each analog input channel to use one of several voltage ranges. Make the most of your input resolution by selecting among the four voltage ranges offered by the NI 612x and 613x devices.

Large Onboard Memory – NI 6123 and NI 6133 devices feature a 16 or 32 MS onboard memory while the NI 6122 and NI 6132 devices feature a 16 MS memory. With deep onboard memory, capture high-bandwidth signals over long periods of time, regardless of bus limitations.

Artisan Technology Group - Quality Instrumentation ... Guaranteed | (888) 88-SOURCE | www.artisantg.com

S Series Multifunction DAQ – up to 16-Bit, up to 3 MS/s per Channel, up to 8 Analog Inputs

Professional Analysis and Presentation Toolkits

There are several analysis and presentation add-on toolkits available from National Instruments that help make you more productive when developing custom applications with your S Series devices. Turn your S Series device into a transient recorder, spectrum analyzer, or one of several other instruments with these toolkits.

NI LabVIEW Sound and Vibration Toolkit

This toolkit includes a full set of frequency-domain analysis and presentation tools required for sound and vibration applications. These tools include:

- Distortion, gain, phase, cross-talk, and dynamic range measurements
- Octave analysis
- Swept-sine analysis
- Linear, exponential, and peak hold measurements
- Baseband and zoom FFT, power, FFT, power spectral density (PSD)
- Limit testing
- Short-time Fourier transform and shock response spectrum
- Weighting filters
- System calibration
- Waterfall/colormap display

NI LabVIEW Signal Processing Toolkit

This toolkit is a suite of software tools, example programs, and utilities for time-frequency analysis and digital filter design. The toolkit includes:

- Wavelet and filter-bank design
- Digital filter design of FIR and IIR filters
- Joint time-frequency analysis (JTFA) with the Gabor spectrograph
- High-frequency resolution model-based spectral estimation for small datasets

NI Spectral Measurements Toolkit

This toolkit includes all of the analysis and presentation tools to convert your S Series device into a full-featured spectrum analyzer. The toolkit includes:

- Measurements such as in-band power and adjacent-channel power
- 3D spectrogram
- Analog modulation and demodulation
- I-Q data for digital demodulation
- Highly optimized FFT processing

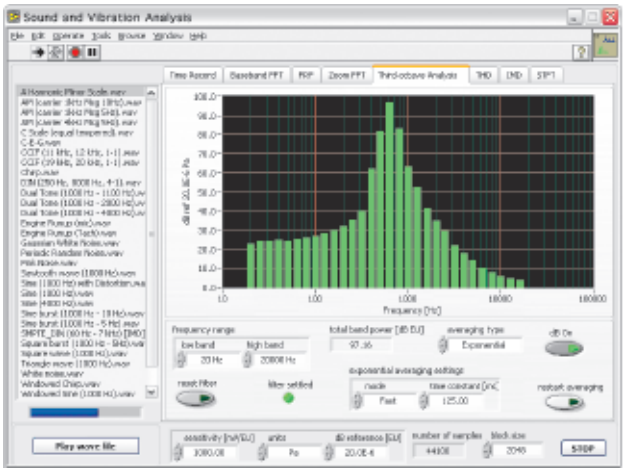

Figure 1. Sound and Vibration Toolkit

High-Performance Data Throughput

Using NI-DAQmx driver software and S Series, you can take full advantage of your PC's throughput potential, which is useful in many applications including transient recording.

Flexible Data Transfer

With NI-DAQmx, you can choose where to accumulate data – on the onboard memory, PC RAM memory, or PC hard drive memory. Thus, you can balance your PC application requirements and stream-to-disk/memory capabilities. In any case, NI-DAQmx optimizes data transfers by using DMA (direct memory access) and transferring large chunks of data, while ensuring no data loss. You can also choose the format of your data, further optimizing throughput. Choices include raw (binary), scaled, or the high-level waveform data type. Using these techniques, you can achieve rates of more than 40 MS/s sustained over the PCI/PXI bus to hard drive (depending on the PC).

Artisan Technology Group - Quality Instrumentation ... Guaranteed | (888) 88-SOURCE | www.artisantg.com

S Series Multifunction DAQ – up to 16-Bit, up to 3 MS/s per Channel, up to 8 Analog Inputs

Data Compaction

With the release of NI-DAQmx 7.4 or later, data compaction is available for stream-to-disk applications. The NI-DAQmx compaction feature strips unused or unwanted bits of data from each sample taken from your S Series device before it is permanently recorded to hard disk. This is helpful because hard drives are typically the throughput bottleneck compared to the PCI/PXI bus and PC RAM memory read/write speed. Using data compression, users with standard hard drives can see up to 20 percent higher throughput when streaming-to-disk.

Signal Conditioning

With the release of NI-DAQmx 7.4 or later, all S Series devices are compatible with parallel mode SCXI modules.

Model	Description	Channels
SCXI-1520	Universal Strain Gage Input	8
SCXI-1125	Isolation Amplifier	8
SCXI-1141/2/3	8-Pole Lowpass Filters	8

Table 2. Most Popular Parallel-Mode SCXI Modules

SCXI is limited to 100 kS/s for 16-bit accuracy and 333 kS/s for 12-bit accuracy when used in multiplexed mode. However, in parallel mode, the sample rate is limited by the maximum scan rate of the data acquisition device. When SCXI is used in parallel mode with S Series, all channels are simultaneously sampled and the sample rate is limited by the S Series device, from 250 kS/s per channel to 10 MS/s per channel.

Measurement Services Software

National Instruments measurement services software, built around NI-DAQmx driver software, includes intuitive application programming interfaces, configuration tools, I/O assistants, and other tools designed to reduce system setup, configuration, and development time. This software is included with your data acquisition purchase. Helpful features include:

Automatic Code Generation – DAQ Assistant is an interactive guide that helps you navigate through configuring, testing, and programming measurement tasks and generates the necessary code automatically for LabVIEW, LabWindows/CVI, or Measurement Studio.

Cleaner Code Development – Basic and advanced software functions have been combined into one easy-to-use yet powerful set to help you build cleaner code and move from basic to advanced applications without replacing functions.

High-Performance Driver Engine – NI-DAQmx delivers maximum I/O system throughput with a multithreaded driver.

Test Panels – With the Measurement & Automation Explorer configuration utility, you can test all of your module functionality before you begin development.

Scaled Channels – Easily scale your voltage data into the proper engineering units using the NI-DAQmx Measurement Ready virtual channels by choosing from a list of common sensors and signals or creating your own custom scale.

Data-Logging Software – VI Logger Lite is configuration-based software designed specifically for data logging. Features include easy logging and viewing of data, data extraction to Microsoft Excel, and code generation in LabVIEW.

LabVIEW Integration – All NI-DAQmx functions create the waveform data type, which carries acquired data and timing information directly into more than 400 LabVIEW built-in analysis routines for display of results in engineering units on a graph.

Ordering Information

PCI

NI PCI-6123 with
- 16 MS 779409-01
- 32 MS 779408-01

NI PCI-6122 779407-01

NI PCI-6133 with
- 16 MS 779420-01
- 32 MS 779421-01

NI PCI-6132 779422-01

PXI

NI PXI-6123 with
- 16 MS 779181-01
- 32 MS 779180-01

NI PXI-6122 779179-01

NI PXI-6133 with
- 16 MS 778771-01
- 32 MS 779129-01

NI PXI-6132 779127-01

Includes data acquisition driver software.

BUY NOW!

For complete product specifications, pricing, and accessory information, call (800) 813 3693 (U.S. only) or go to **ni.com/dataacquisition**.

Artisan Technology Group - Quality Instrumentation ... Guaranteed | (888) 88-SOURCE | www.artisantg.com

S Series Multifunction DAQ – up to 16-Bit, up to 3 MS/s per Channel, up to 8 Analog Inputs

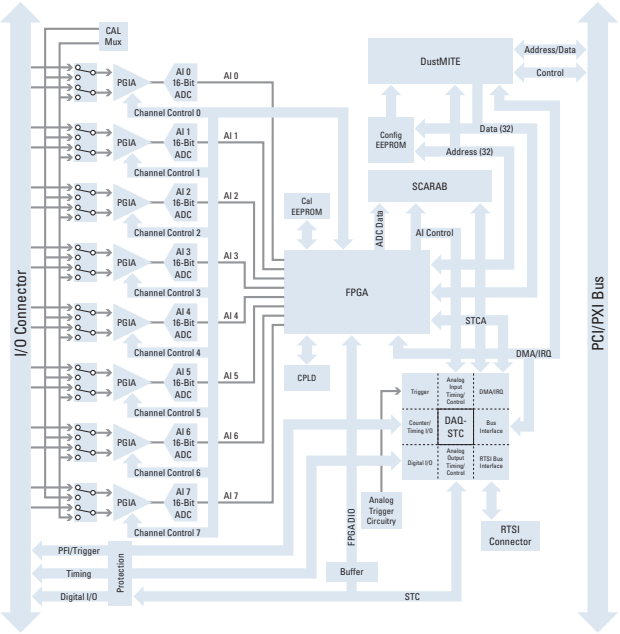

Figure 2. PXI-6123 and PXI-6122 Block Diagram (channels 4-7 do not apply to NI 6122)

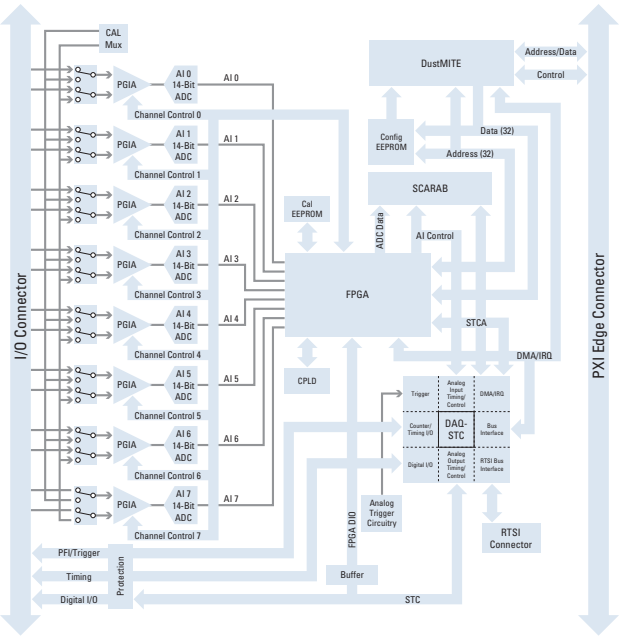

Figure 3. PXI-6133 and PXI-6132 Block Diagram (channels 4-7 do not apply to NI 6132)

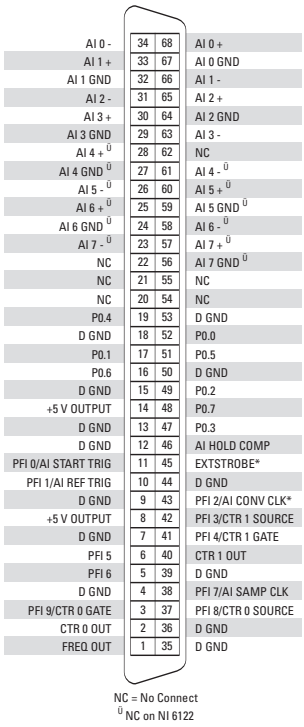

Figure 4. PXI-6123, PXI-6122, PXI-6133, and PXI-6132 Pinout

Artisan Technology Group - Quality Instrumentation ... Guaranteed | (888) 88-SOURCE | www.artisantg.com

S Series Multifunction DAQ – up to 16-Bit, up to 3 MS/s per Channel, up to 8 Analog Inputs

Specifications

These specifications are typical at 25 °C unless otherwise noted.

Analog

Input Characteristics

Number of channels	
NI 6123	8
NI 6122	4
NI 6133	8
NI 6132	4
ADC Resolution	
NI 6122, 6123	16 bits, 1 in 65,536
NI 6132, 6133	14 bits, 1 in 16,384
Sampling rate	
Maximum (NI 6133, 6132)	3.0 MS/s per channel[1]
Maximum (NI 6123, NI 6122)	500 kS/s per channel
Minimum	No minimum
Input signal ranges (selectable by channel)	±10, ±5, ±2.5, ±1.25 V
Input coupling	DC
Input FIFO size	
NI 6123	16 or 32 MS
NI 6122	16 MS
NI 6133	16 or 32 MS
NI 6132	16 MS

[1]2.5 MS/s with NI-DAQmx; 3 MS/s with additional download. Special conditions apply.

Calibration

Calibration interval	2 years

Digital I/O

Number of channels	8 input/output
Compatibility	TTL/CMOS
Power-on state	Input (high-impedance)
Input buffer	2,044 B
Output buffer	2,044 B
Transfer rate (1 word = 8 bits)	10 Mwords/s

Timing I/O

Number of channels	2 up/down counter/timers, 1 frequency scaler
Resolution	
Counter/timers	24 bits
Frequency scaler	4 bits
Compatibility	TTL/CMOS
Base clocks available	
Counter/timers	20 MHz, 100 kHz
Frequency scaler	10 MHz, 100 kHz
Max source frequency	20 MHz

Triggers

Analog Trigger

Source	All analog input channels
Level	± Full-scale
Slope	Positive or negative (software selectable)
Resolution	8 bits, 1 in 256
Hysteresis	Programmable

Digital Trigger

Compatibility	TTL
Response	Rising or falling edge

For detailed specifications, please refer to the NI 612x and NI 613x specifications document.

Artisan Technology Group - Quality Instrumentation ... Guaranteed | (888) 88-SOURCE | www.artisantg.com

S Series Multifunction DAQ Cables and Accessories

SH68-68-EP Shielded Cable

R6868 Ribbon Cable

BNC-2110 I/O Connector Block

TB-2705 Terminal Block

SCB-68 Shielded I/O Connector Block

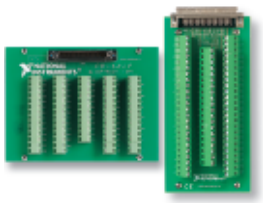

CB-68LP and CB-68LPR I/O Connector Blocks

Recommended Configurations

I/O Configuration	Accessory	Cable
BNC shielded	BNC-2110 (777643-01)	SH68-68-EP (184749-01)
Front-mount shielded screw terminals (PXI only)	TB-2705 (778241-01)	–
Noise-rejecting shielded screw terminals	SCB-68 (776844-01)	SH68-68-EP (184749-01)
Low-cost unshielded screw terminals	CB-68LPR (777145-02)	R6868 (777643-01)

SH68-68-EP Noise-Rejecting Shielded Cable

The SH68-68-EP is a shielded 68-conductor cable terminated with two 68-pin female 0.050 series D-type connectors. It features individually shielded analog twisted pairs for reduced cross-talk with high-speed devices.

1 m 184749-01
2 m 184749-02

R6868 Low-Cost Ribbon Cable

The R6868 is a 68-conductor flat ribbon cable terminated with two 68-pin female 0.050 series D-type connectors.

1 m 182482-01

BNC-2110 Noise-Rejecting BNC I/O Connector Block

The BNC-2110 is a shielded connector block with signal-labeled BNC connectors for easy connectivity of your analog input, digital I/O, and counter/timer signals.

BNC-2110 777643-01
Dimensions – 20.3 by 11.2 by 5.5 cm (8.0 by 4.4 by 2.2 in.)

TB-2705 Noise-Rejecting Front-Mount I/O Connector Block

The TB-2705 is a screw terminal block for your PXI DAQ devices. It latches to the front of your PXI modules with locking screws and provides strain relief and easy access to your analog, digital, trigger, and counter/timer signals through screw terminals.

TB-2705 778241-01
Dimensions – 8.43 by 10.41 by 2.03 cm (3.32 by 4.1 by 0.8 in.)

SCB-68 Noise-Rejecting Shielded I/O Connector Block

The SCB-68 is a shielded I/O connector block for rugged, very-low-noise signal termination for connecting 68-pin DAQ devices. Silk-screened component locations provide an easy addition of simple signal-conditioning circuitry for your analog input channels. It also includes a general-purpose breadboard area as well as an IC temperature sensor for cold-junction compensation in temperature measurements.

SCB-68 776844-01
Dimensions – 19.5 by 15.2 by 4.5 cm (7.7 by 6.0 by 1.8 in.)

CB-68LP and CB-68LPR Low-Cost I/O Connector Blocks

The CB-68 and CB-68LP are low-cost termination accessories with 68 screw terminals for easy connector of field I/O signals to 68-pin DAQ devices. The connector blocks include standoffs for use on a desktop or for mounting in a custom panel. The CB-68LP has a vertical-mounted 68-pin connector. The CB-68LPR has a right-angle mounted connector, and it is used with the CA-1000.

CB-68LP 777145-01
Dimensions – 14.35 by 10.74 cm (5.65 by 4.23 in.)
CB-68LPR 777145-02
Dimensions – 7.62 by 16.19 cm (3.00 by 6.36 in.)

Artisan Technology Group - Quality Instrumentation ... Guaranteed | (888) 88-SOURCE | www.artisantg.com

NI Services and Support

NI has the services and support to meet your needs around the globe and through the application life cycle – from planning and development through deployment and ongoing maintenance. We offer services and service levels to meet customer requirements in research, design, validation, and manufacturing. Visit ni.com/services.

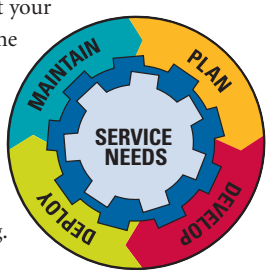

Training and Certification

NI training is the fastest, most certain route to productivity with our products. NI training can shorten your learning curve, save development time, and reduce maintenance costs over the application life cycle. We schedule instructor-led courses in cities worldwide, or we can hold a course at your facility. We also offer a professional certification program that identifies individuals who have high levels of skill and knowledge on using NI products. Visit ni.com/training.

Professional Services

Our Professional Services Team is comprised of NI applications engineers, NI Consulting Services, and a worldwide National Instruments Alliance Partner program of more than 600 independent consultants and integrators. Services range from start-up assistance to turnkey system integration. Visit ni.com/alliance.

NATIONAL INSTRUMENTS™
Certified Alliance Partner

OEM Support

We offer design-in consulting and product integration assistance if you want to use our products for OEM applications. For information about special pricing and services for OEM customers, visit ni.com/oem.

Local Sales and Technical Support

In offices worldwide, our staff is local to the country, giving you access to engineers who speak your language. NI delivers industry-leading technical support through online knowledge bases, our applications engineers, and access to 14,000 measurement and automation professionals within NI Developer Exchange forums. Find immediate answers to your questions at ni.com/support.

We also offer service programs that provide automatic upgrades to your application development environment and higher levels of technical support. Visit ni.com/ssp.

Hardware Services

NI Factory Installation Services

NI Factory Installation Services (FIS) is the fastest and easiest way to use your PXI or PXI/SCXI combination systems right out of the box. Trained NI technicians install the software and hardware and configure the system to your specifications. NI extends the standard warranty by one year on hardware components (controllers, chassis, modules) purchased with FIS. To use FIS, simply configure your system online with ni.com/pxiadvisor.

Calibration Services

NI recognizes the need to maintain properly calibrated devices for high-accuracy measurements. We provide manual calibration procedures, services to recalibrate your products, and automated calibration software specifically designed for use by metrology laboratories. Visit ni.com/calibration.

Repair and Extended Warranty

NI provides complete repair services for our products. Express repair and advance replacement services are also available. We offer extended warranties to help you meet project life-cycle requirements. Visit ni.com/services.

NATIONAL INSTRUMENTS™

ni.com • (800) 813 3693

National Instruments • info@ni.com

© 2005 National Instruments Corporation. All rights reserved. CVI, DAQ-STC, LabVIEW, Measurement Studio, MITE, National Instruments, National Instruments Alliance Partner, NI, ni.com, NI-DAQ, SCXI, and SignalExpress are trademarks of National Instruments. Other product and company names listed are trademarks or trade names of their respective companies. A National Instruments Alliance Partner is a business entity independent from NI and has no agency, partnership, or joint-venture relationship with NI.

2005_4961_301_101_D_612x_613x

Artisan Technology Group - Quality Instrumentation ... Guaranteed | (888) 88-SOURCE | www.artisantg.com

Artisan Technology Group

Artisan Technology Group is your source for quality new and certified-used/pre-owned equipment

- FAST SHIPPING AND DELIVERY
- TENS OF THOUSANDS OF IN-STOCK ITEMS
- EQUIPMENT DEMOS
- HUNDREDS OF MANUFACTURERS SUPPORTED
- LEASING/MONTHLY RENTALS
- ITAR CERTIFIED SECURE ASSET SOLUTIONS

SERVICE CENTER REPAIRS
Experienced engineers and technicians on staff at our full-service, in-house repair center

InstraView℠ REMOTE INSPECTION
Remotely inspect equipment before purchasing with our interactive website at ***www.instraview.com*** ↗

WE BUY USED EQUIPMENT
Sell your excess, underutilized, and idle used equipment
We also offer credit for buy-backs and trade-ins
www.artisantg.com/WeBuyEquipment ↗

LOOKING FOR MORE INFORMATION?
Visit us on the web at ***www.artisantg.com*** ↗ for more information on price quotations, drivers, technical specifications, manuals, and documentation

Contact us: (888) 88-SOURCE | sales@artisantg.com | www.artisantg.com