SCXI™

SCXI-1190/1191/1192
User Manual

NATIONAL INSTRUMENTS™

February 2001 Edition
Part Number 322610B-01

Worldwide Technical Support and Product Information

ni.com

National Instruments Corporate Headquarters

11500 North Mopac Expressway Austin, Texas 78759-3504 USA Tel: 512 794 0100

Worldwide Offices

Australia 03 9879 5166, Austria 0662 45 79 90 0, Belgium 02 757 00 20, Brazil 011 284 5011,
Canada (Calgary) 403 274 9391, Canada (Ottawa) 613 233 5949, Canada (Québec) 514 694 8521,
China (Shanghai) 021 6555 7838, China (ShenZhen) 0755 3904939, Denmark 45 76 26 00,
Finland 09 725 725 11, France 01 48 14 24 24, Germany 089 741 31 30, Greece 30 1 42 96 427,
Hong Kong 2645 3186, India 91805275406, Israel 03 6120092, Italy 02 413091, Japan 03 5472 2970,
Korea 02 596 7456, Mexico 5 280 7625, Netherlands 0348 433466, New Zealand 09 914 0488,
Norway 32 27 73 00, Poland 0 22 528 94 06, Portugal 351 1 726 9011, Singapore 2265886, Spain 91 640 0085,
Sweden 08 587 895 00, Switzerland 056 200 51 51, Taiwan 02 2528 7227, United Kingdom 01635 523545

For further support information, see the *Technical Support Resources* appendix. To comment on the documentation, send e-mail to `techpubs@ni.com`

© Copyright 2000, 2001 National Instruments Corporation. All rights reserved.

Important Information

Warranty

The SCXI-1190, SCXI-1191, and SCXI-1192 are warranted against defects in materials and workmanship for a period of one year from the date of shipment, as evidenced by receipts or other documentation. National Instruments will, at its option, repair or replace equipment that proves to be defective during the warranty period. This warranty includes parts and labor.

The media on which you receive National Instruments software are warranted not to fail to execute programming instructions, due to defects in materials and workmanship, for a period of 90 days from date of shipment, as evidenced by receipts or other documentation. National Instruments will, at its option, repair or replace software media that do not execute programming instructions if National Instruments receives notice of such defects during the warranty period. National Instruments does not warrant that the operation of the software shall be uninterrupted or error free.

A Return Material Authorization (RMA) number must be obtained from the factory and clearly marked on the outside of the package before any equipment will be accepted for warranty work. National Instruments will pay the shipping costs of returning to the owner parts which are covered by warranty.

National Instruments believes that the information in this document is accurate. The document has been carefully reviewed for technical accuracy. In the event that technical or typographical errors exist, National Instruments reserves the right to make changes to subsequent editions of this document without prior notice to holders of this edition. The reader should consult National Instruments if errors are suspected. In no event shall National Instruments be liable for any damages arising out of or related to this document or the information contained in it.

EXCEPT AS SPECIFIED HEREIN, NATIONAL INSTRUMENTS MAKES NO WARRANTIES, EXPRESS OR IMPLIED, AND SPECIFICALLY DISCLAIMS ANY WARRANTY OF MERCHANTABILITY OR FITNESS FOR A PARTICULAR PURPOSE. CUSTOMER'S RIGHT TO RECOVER DAMAGES CAUSED BY FAULT OR NEGLIGENCE ON THE PART OF NATIONAL INSTRUMENTS SHALL BE LIMITED TO THE AMOUNT THERETOFORE PAID BY THE CUSTOMER. NATIONAL INSTRUMENTS WILL NOT BE LIABLE FOR DAMAGES RESULTING FROM LOSS OF DATA, PROFITS, USE OF PRODUCTS, OR INCIDENTAL OR CONSEQUENTIAL DAMAGES, EVEN IF ADVISED OF THE POSSIBILITY THEREOF. This limitation of the liability of National Instruments will apply regardless of the form of action, whether in contract or tort, including negligence. Any action against National Instruments must be brought within one year after the cause of action accrues. National Instruments shall not be liable for any delay in performance due to causes beyond its reasonable control. The warranty provided herein does not cover damages, defects, malfunctions, or service failures caused by owner's failure to follow the National Instruments installation, operation, or maintenance instructions; owner's modification of the product; owner's abuse, misuse, or negligent acts; and power failure or surges, fire, flood, accident, actions of third parties, or other events outside reasonable control.

Copyright

Under the copyright laws, this publication may not be reproduced or transmitted in any form, electronic or mechanical, including photocopying, recording, storing in an information retrieval system, or translating, in whole or in part, without the prior written consent of National Instruments Corporation.

Trademarks

CVI™, LabVIEW™, National Instruments™, ni.com™, NI-DAQ™, PXI™, SCXI™, and VirtualBench™ are trademarks of National Instruments Corporation.

Product and company names mentioned herein are trademarks or trade names of their respective companies.

WARNING REGARDING USE OF NATIONAL INSTRUMENTS PRODUCTS

(1) NATIONAL INSTRUMENTS PRODUCTS ARE NOT DESIGNED WITH COMPONENTS AND TESTING FOR A LEVEL OF RELIABILITY SUITABLE FOR USE IN OR IN CONNECTION WITH SURGICAL IMPLANTS OR AS CRITICAL COMPONENTS IN ANY LIFE SUPPORT SYSTEMS WHOSE FAILURE TO PERFORM CAN REASONABLY BE EXPECTED TO CAUSE SIGNIFICANT INJURY TO A HUMAN.

(2) IN ANY APPLICATION, INCLUDING THE ABOVE, RELIABILITY OF OPERATION OF THE SOFTWARE PRODUCTS CAN BE IMPAIRED BY ADVERSE FACTORS, INCLUDING BUT NOT LIMITED TO FLUCTUATIONS IN ELECTRICAL POWER SUPPLY, COMPUTER HARDWARE MALFUNCTIONS, COMPUTER OPERATING SYSTEM SOFTWARE FITNESS, FITNESS OF COMPILERS AND DEVELOPMENT SOFTWARE USED TO DEVELOP AN APPLICATION, INSTALLATION ERRORS, SOFTWARE AND HARDWARE COMPATIBILITY PROBLEMS, MALFUNCTIONS OR FAILURES OF ELECTRONIC MONITORING OR CONTROL DEVICES, TRANSIENT FAILURES OF ELECTRONIC SYSTEMS (HARDWARE AND/OR SOFTWARE), UNANTICIPATED USES OR MISUSES, OR ERRORS ON THE PART OF THE USER OR APPLICATIONS DESIGNER (ADVERSE FACTORS SUCH AS THESE ARE HEREAFTER COLLECTIVELY TERMED "SYSTEM FAILURES"). ANY APPLICATION WHERE A SYSTEM FAILURE WOULD CREATE A RISK OF HARM TO PROPERTY OR PERSONS (INCLUDING THE RISK OF BODILY INJURY AND DEATH) SHOULD NOT BE RELIANT SOLELY UPON ONE FORM OF ELECTRONIC SYSTEM DUE TO THE RISK OF SYSTEM FAILURE. TO AVOID DAMAGE, INJURY, OR DEATH, THE USER OR APPLICATION DESIGNER MUST TAKE REASONABLY PRUDENT STEPS TO PROTECT AGAINST SYSTEM FAILURES, INCLUDING BUT NOT LIMITED TO BACK-UP OR SHUT DOWN MECHANISMS. BECAUSE EACH END-USER SYSTEM IS CUSTOMIZED AND DIFFERS FROM NATIONAL INSTRUMENTS' TESTING PLATFORMS AND BECAUSE A USER OR APPLICATION DESIGNER MAY USE NATIONAL INSTRUMENTS PRODUCTS IN COMBINATION WITH OTHER PRODUCTS IN A MANNER NOT EVALUATED OR CONTEMPLATED BY NATIONAL INSTRUMENTS, THE USER OR APPLICATION DESIGNER IS ULTIMATELY RESPONSIBLE FOR VERIFYING AND VALIDATING THE SUITABILITY OF NATIONAL INSTRUMENTS PRODUCTS WHENEVER NATIONAL INSTRUMENTS PRODUCTS ARE INCORPORATED IN A SYSTEM OR APPLICATION, INCLUDING, WITHOUT LIMITATION, THE APPROPRIATE DESIGN, PROCESS AND SAFETY LEVEL OF SUCH SYSTEM OR APPLICATION.

Compliance

FCC/Canada Radio Frequency Interference Compliance*

Determining FCC Class

The Federal Communications Commission (FCC) has rules to protect wireless communications from interference. The FCC places digital electronics into two classes. These classes are known as Class A (for use in industrial-commercial locations only) or Class B (for use in residential or commercial locations). Depending on where it is operated, this product could be subject to restrictions in the FCC rules. (In Canada, the Department of Communications (DOC), of Industry Canada, regulates wireless interference in much the same way.)

Digital electronics emit weak signals during normal operation that can affect radio, television, or other wireless products. By examining the product you purchased, you can determine the FCC Class and therefore which of the two FCC/DOC Warnings apply in the following sections. (Some products may not be labeled at all for FCC; if so, the reader should then assume these are Class A devices.)

FCC Class A products only display a simple warning statement of one paragraph in length regarding interference and undesired operation. Most of our products are FCC Class A. The FCC rules have restrictions regarding the locations where FCC Class A products can be operated.

FCC Class B products display either a FCC ID code, starting with the letters **EXN**, or the FCC Class B compliance mark that appears as shown here on the right.

Consult the FCC web site `http://www.fcc.gov` for more information.

Trade Name Model Number
Tested to Comply with FCC Standards
FOR HOME OR OFFICE USE

FCC/DOC Warnings

This equipment generates and uses radio frequency energy and, if not installed and used in strict accordance with the instructions in this manual and the CE Mark Declaration of Conformity**, may cause interference to radio and television reception. Classification requirements are the same for the Federal Communications Commission (FCC) and the Canadian Department of Communications (DOC).

Changes or modifications not expressly approved by National Instruments could void the user's authority to operate the equipment under the FCC Rules.

Class A

Federal Communications Commission

This equipment has been tested and found to comply with the limits for a Class A digital device, pursuant to part 15 of the FCC Rules. These limits are designed to provide reasonable protection against harmful interference when the equipment is operated in a commercial environment. This equipment generates, uses, and can radiate radio frequency energy and, if not installed and used in accordance with the instruction manual, may cause harmful interference to radio communications. Operation of this equipment in a residential area is likely to cause harmful interference in which case the user will be required to correct the interference at his own expense.

Canadian Department of Communications

This Class A digital apparatus meets all requirements of the Canadian Interference-Causing Equipment Regulations.

Cet appareil numérique de la classe A respecte toutes les exigences du Règlement sur le matériel brouilleur du Canada.

Class B

Federal Communications Commission

This equipment has been tested and found to comply with the limits for a Class B digital device, pursuant to part 15 of the FCC Rules. These limits are designed to provide reasonable protection against harmful interference in a residential installation. This equipment generates, uses and can radiate radio frequency energy and, if not installed and used in accordance with the instructions, may cause harmful interference to radio communications. However, there is no guarantee that interference will not occur in a particular installation. If this equipment does cause harmful interference to radio or television reception, which can be determined by turning the equipment off and on, the user is encouraged to try to correct the interference by one or more of the following measures:

- Reorient or relocate the receiving antenna.
- Increase the separation between the equipment and receiver.
- Connect the equipment into an outlet on a circuit different from that to which the receiver is connected.
- Consult the dealer or an experienced radio/TV technician for help.

Canadian Department of Communications

This Class B digital apparatus meets all requirements of the Canadian Interference-Causing Equipment Regulations.

Cet appareil numérique de la classe B respecte toutes les exigences du Règlement sur le matériel brouilleur du Canada.

European Union - Compliance to EEC Directives

Readers in the EU/EEC/EEA must refer to the Manufacturer's Declaration of Conformity (DoC) for information** pertaining to the CE Mark compliance scheme. The Manufacturer includes a DoC for most every hardware product except for those bought for OEMs, if also available from an original manufacturer that also markets in the EU, or where compliance is not required as for electrically benign apparatus or cables.

* Certain exemptions may apply in the USA, see FCC Rules §15.103 **Exempted devices**, and §15.105(c). Also available in sections of CFR 47.

** The CE Mark Declaration of Conformity will contain important supplementary information and instructions for the user or installer.

Conventions

The following conventions are used in this manual:

» — The » symbol leads you through nested menu items and dialog box options to a final action. The sequence **File»Page Setup»Options** directs you to pull down the **File** menu, select the **Page Setup** item, and select **Options** from the last dialog box.

— This icon denotes a note, which alerts you to important information.

— This icon denotes a caution, which advises you of precautions to take to avoid injury, data loss, or a system crash.

— This icon denotes a warning, which advises you of precautions to take to avoid being electrically shocked.

bold — Bold text denotes items that you must select or click on in the software, such as menu items and dialog box options. Bold text also denotes parameter names.

italic — Italic text denotes variables, emphasis, a cross reference, or an introduction to a key concept. This font also denotes text that is a placeholder for a word or value that you must supply.

`monospace` — Text in this font denotes text or characters that you should enter from the keyboard, sections of code, programming examples, and syntax examples. This font is also used for the proper names of disk drives, paths, directories, programs, subprograms, subroutines, device names, functions, operations, variables, filenames and extensions, and code excerpts.

`monospace bold` — Bold text in this font denotes the messages and responses that the computer automatically prints to the screen. This font also emphasizes lines of code that are different from the other examples.

SCXI-119*X* — Refers to the SCXI-1190 module, the SCXI-1191 module, and the SCXI-1192 module.

Contents

Chapter 1
Installing and Configuring the SCXI-119*X*

About the SCXI-119*X* 1-1
Installing the Software 1-2
Safety Instructions 1-3
Installing the Hardware 1-3
Unpacking 1-4
Installing the SCXI-119*X* Module into an SCXI Chassis 1-4
Connecting the SCXI-119*X* to a DAQ Device or Computer-Based Instrument 1-6
Connecting the SCXI-119*X* to a DAQ Device in a PXI Combination Chassis 1-8
Configuring and Self-Testing the SCXI-119*X* 1-9
Auto-Detecting Modules 1-9
Manually Adding Modules 1-10
Self-Test Verification 1-11
Troubleshooting Self-Test Verification 1-11
Removing the SCXI-119*X* 1-13
Removing the SCXI-119*X* from an SCXI Chassis 1-13
Removing the SCXI-119*X* from MAX 1-14

Chapter 2
Using the SCXI-119*X*

Functional Overview 2-1
RF Switching Precautions 2-3
Contact Protection 2-4
Connecting Signals 2-5
Multiplexing to RF Sources 2-6
Expanding the RF Multiplexer 2-8

Appendix A
Specifications

Appendix B
Common Questions

Appendix C
Technical Support Resources

Glossary

Index

1

Installing and Configuring the SCXI-119*X*

This manual describes the electrical and mechanical characteristics of the SCXI-1190 (quad 1 × 4, 50 Ω, 1.3 GHz bandwidth) and SCXI-1191 (quad 1 × 4, 50 Ω, 4 GHz bandwidth) multiplexer modules, and the SCXI-1192 (8-channel, SPDT, 50 Ω, 18 GHz bandwidth) relay module for the SCXI bus. It also contains information concerning their installation, operation, and safety instructions.

About the SCXI-119*X*

This section summarizes the features and operation of the SCXI-119*X* switch modules. In addition, refer to Appendix A, *Specifications*, for detailed specifications of the switch modules.

The SCXI-1190/1191 modules are general-purpose, quad 4-channel, high-bandwidth multiplexing switches. The SCXI-1192 module is a general-purpose, 8-channel, SPDT, high-bandwidth relay module.

The SCXI-119*X* modules use single-pole double-throw, high-bandwidth relays capable of switching signals from DC to 1.3 GHz bandwidth (SCXI-1190), from DC to 4 GHz bandwidth (SCXI-1191), and from DC to 18 GHz bandwidth (SCXI-1192). The characteristic impedance of the channels is 50 Ω.

For the SCXI-1190, the maximum rated voltage of the switch is 24 V, and the maximum rated current is 1 A at 24 V. For the SCXI-1191, the maximum rated voltage of the switch is 30 V, and the maximum rated current is 0.33 A at 30 V. For the SCXI-1192, the maximum rated voltage of the switch is 30 V, and the maximum rated current is 2 A at 30 V.

See Appendix A, *Specifications*, for full specifications.

Installing the Software

You can control the SCXI-119*X* programmatically in an application development environment (ADE) using NI-SWITCH. The supported ADEs include LabVIEW, LabWindows/CVI, Visual Basic, and C or C++ environments. To install software for the SCXI-119*X*, complete the following:

1. Insert your NI-SWITCH software CD into your CD-ROM drive. The installation window should appear automatically.

Note If the installation window does not appear, double-click the **My Computer** icon on your PC desktop. Find the CD drive, and double-click it. In the CD directory, double-click `setup.exe`.

The NI-SWITCH and NI-DMM installation window offers three choices:

- **Install NI-DMM**—Choose this selection if you want to install only the DMM software.
- **Install NI-SWITCH**—Choose this selection if you want to install only the switches software.
- **Install NI-SWITCH and NI-DMM**—Choose this selection if you want to install both the DMM and switches software.

2. Click the **Install NI-SWITCH** option.
3. To install the instrument driver, VirtualBench, and application development examples, choose **Programmatic and Interactive Support**. To install only the instrument driver files for VirtualBench, choose **Interactive Support Only**.

Note Choosing **Interactive Support Only** does *not* allow you to program the instrument with any programming languages.

4. When installing NI-SWITCH, look at the **Development Environments** panel.
   - If you click the **Advanced** button on this panel, you can custom install National Instruments drivers such as NI-DAQ, NI-IVI, and NI-VISA.
   - If you do *not* want to install certain drivers, click **Advanced** and uncheck the driver(s) you do not want installed.

   If a driver is already unchecked, your computer has the same driver or a newer version of the driver already installed.

Note If a newer version of a driver is present on your PC, the installer will *not* overwrite the driver.

Safety Instructions

Cautions Do *not* operate damaged equipment. The safety protection features built into this instrument can become impaired if the instrument becomes damaged in any way. If the instrument is damaged, do *not* use it until service-trained personnel can check its safety. If necessary, return the instrument to National Instruments for service and repair to ensure that its safety is not compromised.

Do *not* operate this instrument in a manner that contradicts the information specified in this document. Misuse of this instrument could result in a shock hazard.

Do *not* substitute parts or modify equipment. Because of the danger of introducing additional hazards, do *not* install unauthorized parts or modify the instrument. Return the instrument to National Instruments for service and repair to ensure that its safety is not compromised.

Connections that exceed any of the maximum signal ratings on the SCXI-119*X* can create a shock or fire hazard or can damage any or all of the devices connected to the SCXI-119*X*. National Instruments is *not* liable for any damages or injuries resulting from incorrect signal connections.

Clean the instrument and accessories by brushing off light dust with a soft, nonmetallic brush. Remove other contaminants with a stiff nonmetallic brush. The unit must be completely dry and free from contaminants before returning to service.

Installing the Hardware

The following section describes how to unpack, install, and connect your SCXI-119*X* for use with an SCXI chassis.

Caution Make sure you read and understand all the safety information in this manual before you install an SCXI module.

Unpacking

Your SCXI-119*X* module is shipped in an antistatic package to prevent electrostatic damage to the module. Electrostatic discharge can damage several components on the module. To avoid such damage in handling the module, take the following precautions:

- Ground yourself using a grounding strap or by holding a grounded object.
- Touch the antistatic package to a metal part of your computer chassis before removing the module from the package.

Caution *Never* touch the exposed pins of connectors.

Remove the module from the package and inspect the module for loose components or any sign of damage. Notify National Instruments if the module appears damaged in any way. Do *not* install a damaged module into your computer.

Store your SCXI-119*X* module in the antistatic envelope when not in use.

Installing the SCXI-119*X* Module into an SCXI Chassis

You need the following items to complete the installation:

- SCXI-119*X* module
- SCXI chassis

Follow these steps to install your SCXI-119*X* module into an SCXI chassis while referring to Figure 1-1 and your chassis documentation:

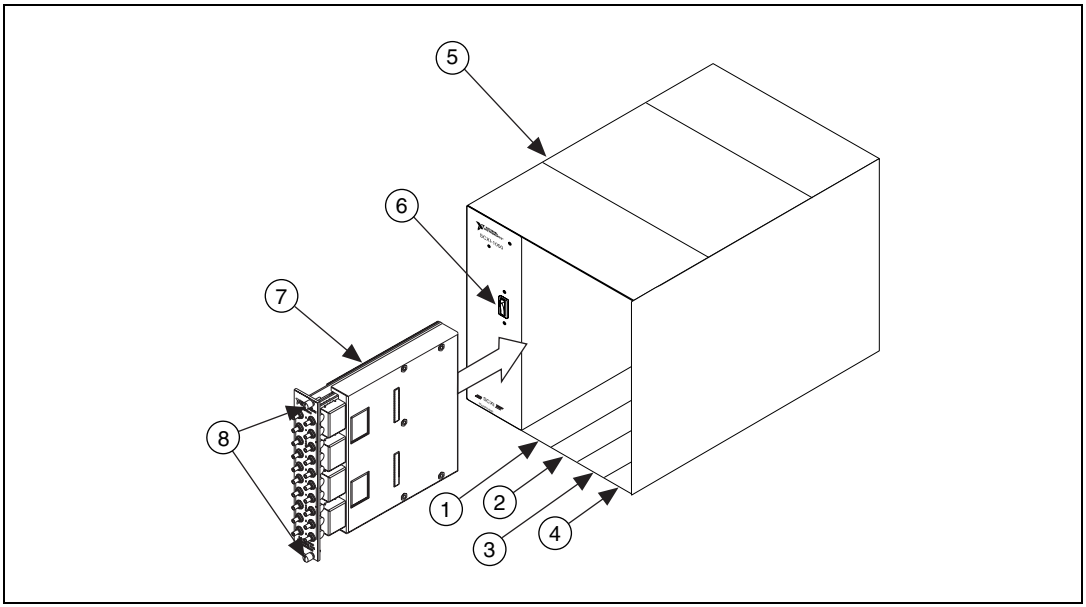

1	Slot 1	5	SCXI Chassis (SCXI-1000 Shown)
2	Slot 2	6	SCXI Chassis Power Switch
3	Slot 3	7	SCXI-119*X* (SCXI-1190 Shown)
4	Slot 4	8	SCXI Module Thumbscrews

Figure 1-1. Installing the SCXI-119*X* into an SCXI Chassis

1. Turn off the computer that contains the DAQ device or computer-based instrument, or disconnect the computer from your SCXI chassis.
2. Turn off the SCXI chassis.

Caution Do *not* insert the SCXI-119*X* module into a chassis that is powered on because doing so could damage the module.

3. Remove the protective plastic caps from the thumbscrews of the module so that the module will insert correctly.
4. Insert the SCXI-119*X* module into slot 1. Gently guide the module into the module guides and push it to the back of the slot until the connectors make good contact. The module must be firmly engaged; however, do *not* force the module into place. If the module is not sliding easily into the chassis, check for correct insertion into the module guides.

Note When installing the SCXI-119*X* module in an SCXI chassis, fill slot 1 first, then fill slot 2 with the next SCXI-119*X*.

5. Insert any other SCXI modules into the remaining slots in the same manner as described in step 4.
6. Secure all the SCXI-119*X* modules to the SCXI chassis by tightening both module thumbscrews.

Connecting the SCXI-119*X* to a DAQ Device or Computer-Based Instrument

You need the following items:

- SCXI chassis with the SCXI modules installed (Refer to the *Installing the SCXI-119X Module into an SCXI Chassis* section for more information.)
- SCXI cable assembly, which consists of a cable adapter and a cable
- An installed National Instruments DAQ device or computer-based instrument, such as the NI 4060, that is able to control the SCXI chassis
- 1/4 in. flathead screwdriver

Consult your SCXI chassis documentation, other SCXI module documentation, and DAQ device or computer-based instrument documentation for additional instructions and warnings. Your SCXI-119*X* module and any other SCXI modules should already be installed in the chassis according to their installation instructions.

You must select one of the modules in the chassis as the cabled module—the module to which the SCXI cable assembly connects. If the chassis contains at least one SCXI-1140 module, select an SCXI-1140 as the cabled module; otherwise, select one of the remaining modules.

Note The SCXI-119*X* modules operate only in multiplexed mode.

To connect the chassis to a DAQ device, complete the following steps while referring to Figure 1-2:

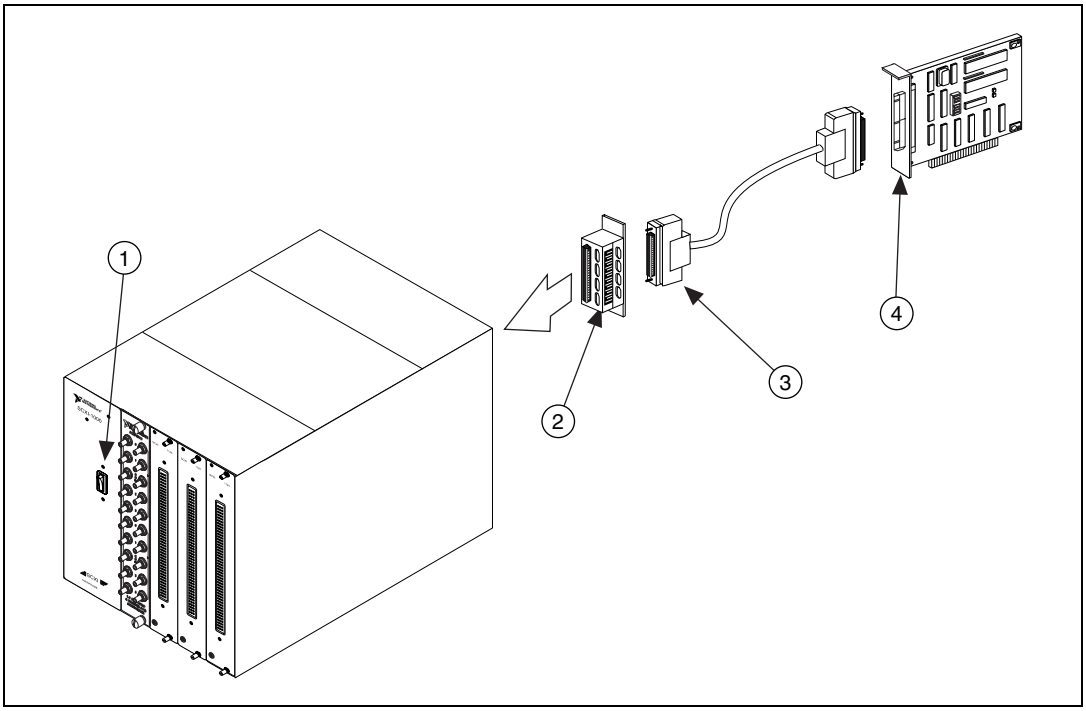

1	SCXI Chassis Power Switch	3	Cable
2	Cable Adapter	4	DAQ Device or Computer-Based Instrument

Figure 1-2. Connecting an SCXI Chassis to a DAQ Device or Computer-Based Instrument

1. Power off both the SCXI chassis and the computer that contains the DAQ device or computer-based instrument.
2. Insert the cable adapter into the back of the SCXI chassis aligned with the module that is to be connected to the DAQ device or computer-based instrument. See your cable assembly installation guide for more specific information.
3. Connect the cable to the back of the cable adapter, ensuring that the cable fits securely.
4. Connect the other end of the cable to the DAQ device or computer-based instrument that you will use to control the SCXI system.

5. Check the cable installation, making sure the connectors are securely fastened at both ends.
6. Power on the SCXI chassis.
7. Power on the computer.
8. If you have already installed the appropriate software, you are ready to configure the SCXI-119*X*. If you have not installed the appropriate software, refer to the *Installing the Software* section.

Connecting the SCXI-119*X* to a DAQ Device in a PXI Combination Chassis

To connect the SCXI-119*X* to a DAQ device in a PXI combination chassis, such as the PXI-1010 or PXI-1011, you need the following items:

- PXI combination chassis with the SCXI modules installed
- National Instruments PXI MIO DAQ device, or a computer-based instrument that is capable of controlling SCXI, installed in the right most slot of the PXI section of the combination chassis

A PXI combination chassis can use both SCXI and PXI modules at the same time. Because the connection between the SCXI backplane and the PXI backplane is made through a local bus interface to a PXI multifunction I/O module installed in the right most slot, no external cabling is needed to connect one PXI multifunction I/O module to the SCXI bus.

You should have already installed your SCXI-119*X* module and any other SCXI modules in the chassis according to their installation instructions. To use the SCXI-119*X* module with a DAQ device or computer-based instrument in a PXI combination chassis, turn on the SCXI chassis.

Consult your PXI chassis documentation, other SCXI module documentation, and DAQ device or computer-based instrument documentation for additional instructions and warnings.

If you have already installed the appropriate software, you are ready to configure the SCXI-119*X*. If you have not installed the appropriate software, refer to the *Installing the Software* section.

Configuring and Self-Testing the SCXI-119*X*

Run Measurement & Automation Explorer (MAX) to configure and test your SCXI-119X. If you need help during the configuration process, open the Measurement & Automation Help file by selecting **Help»Help Topics**.

1. Double-click the **Measurement & Automation Explorer** icon on your desktop.
2. To add a new chassis, right-click **Devices and Interfaces** and select **Create New**.
3. Select the appropriate chassis from the list box and click **Finish**.
4. To configure the chassis, select the **Chassis ID**. The chassis ID is an arbitrary number that you choose for use by the software to uniquely specify the chassis.
5. Select the **Chassis Address** (refer to your SCXI Chassis User Manual for further information).

   For the SCXI-2000, you also need to select the **Baud Rate** and **COM Port**.

You now have the choice of auto-detecting your modules or manually adding them depending on your application.

Auto-Detecting Modules

If you selected auto-detect and the chassis is not an SCXI-2000 remote chassis, you must have your chassis connected to your National Instruments device.

Note Make sure you have your chassis powered on.

1. Click **Next**.
2. Select your communication path, except in the case of the SCXI-2000, and click **Next**.
3. Select the module cabled to your communication path, except in the case of the SCXI-2000 or if your module supports Auto Cable Detect, and click **Finish**.

Your SCXI chassis and SCXI-119*X* modules are now configured in the software with your modules. To configure the properties for a particular module, perform the following steps:

1. Expand **Devices and Interfaces**. You can see the chassis selected in the list.
2. Expand **Chassis**.
3. Right-click the module you want to configure and select **Properties**. Tabs are displayed containing attributes for different properties of the module. You can select any tab to see and/or change any attributes.

Manually Adding Modules

If you selected not to auto-detect your SCXI modules, you must add each of your modules separately.

1. Click **Finish** in the SCXI Auto-Detect window.
2. Expand **Devices and Interfaces**. You will see the chassis you selected in the list.
3. Expand **Chassis**.
4. Right-click the slot that is cabled to your device and select **Insert**. For DAQ devices this slot is the slot cabled to the DAQ device. Select the module that is intended for that slot and click **Next**.
5. You are now given the option to make this the module that controls the chassis. Select the DAQ device or computer-based instrument you cabled to the chassis using the **Connected to:** control. Confirm that there is a check in the checkbox labeled **This device will control the chassis** and click **Next**.
6. You are presented with a series of properties for the module. Select the appropriate values for the attributes and click **Next**. After making your selections, click **Finish**.

You are now finished configuring the slot. Configure the rest of your modules in the same manner.

To remove a module or chassis, right-click on the chassis or module you want to remove and select **Delete**.

To test the chassis configuration, right-click on the chassis and select **Test**.

Self-Test Verification

To test the successful configuration of your system, complete the following steps:

1. Double-click the **Measurement & Automation Explorer** icon on your PC desktop.
2. Verify that the chassis power is on and that the chassis is correctly connected to a DAQ device or computer-based instrument.
3. Expand **Devices and Interfaces**.
4. From the list of devices and interfaces that appears, locate the chassis you want to test. Right-click on the chassis and select **Test**. If the communication test is successful, a message **`The chassis has been verified`** appears.
5. Click **OK**.

Note If the communication test is unsuccessful, refer to the *Troubleshooting Self-Test Verification* section.

Your SCXI system should now operate properly with your ADE software. If you experience problems between your SCXI system and your ADE, refer to the *Troubleshooting Self-Test Verification* section. Additionally, you may find it helpful to refer to your NI-SWITCH documentation, your ADE software documentation, and your chassis documentation. National Instruments documentation is available to download free at `ni.com/manuals`

Troubleshooting Self-Test Verification

If the preceding test did not verify your chassis configuration, take the following steps to successfully complete system configuration:

- If you get the warning message **`Unable to test chassis at this time`**, verify that you have designated a module as being connected to a DAQ device or computer-based instrument. Take the following troubleshooting actions:
    a. Double-click the **Measurement & Automation Explorer** icon on your PC desktop.
    b. Expand **Devices and Interfaces**.
    c. Expand your SCXI chassis to show all the SCXI modules.
    d. Right-click the module that is connected to your DAQ device or computer-based instrument and select **Properties**.

e. Change the **Connected to** selection from **None** to **Connected to: Device *x***.

- If you get the warning message **`Failed to find`** followed by the module codes and the message **`Unable to communicate with chassis`**, take the following troubleshooting actions:
  a. Make sure that the SCXI chassis is powered on.
  b. Make sure the cable between the SCXI chassis and DAQ device or computer-based instrument is properly connected.
  c. Inspect the cable and the connectors for any bent pins.
  d. Make sure you are using the correct National Instruments cable assembly.
  e. Test your DAQ device or computer-based instrument to verify it is working properly. Refer to your DAQ device or computer-based instrument user manual for more information.
- If you get the warning message **`Failed to find`**, followed by module codes and then the message **`Instead found: module with ID 0Xxx`**:
  a. Return to the *Connecting the SCXI-119X to a DAQ Device or Computer-Based Instrument* section and make sure the correct module is in the specified slot.
  b. Delete the incorrect module as described in the *Removing the SCXI-119X from an SCXI Chassis* section.
  c. Add the correct module as described in the *Manually Adding Modules* section.
- If you get the warning message **`Failed to find`**, followed by a module code and then the message **`Slot x is empty`**:
  a. Check to see if the configured module is installed in the specified slot. If not, install the module by referring to the *Installing the Hardware* section.
  b. If the module is installed in the correct slot, turn off the chassis, and remove the module as specified in the *Removing the SCXI-119X from an SCXI Chassis* section. Verify that no connector pins are bent on the rear signal connector. Reinstall the module, ensuring the module is fully inserted and properly aligned in the slot.
- After checking the preceding items, return to the *Self-Test Verification* section and retest your SCXI chassis.

Removing the SCXI-119*X*

This section describes how to remove the SCXI-119*X* from an SCXI chassis.

Removing the SCXI-119*X* from an SCXI Chassis

Make sure you read and understand all the safety information in this manual before you remove an SCXI module.

Consult the documentation for your SCXI or PXI (if you are using a combination chassis) chassis and accessories for additional instructions and warnings.

To remove the SCXI-119*X* module from an SCXI chassis, complete the following steps while referring to Figure 1-3:

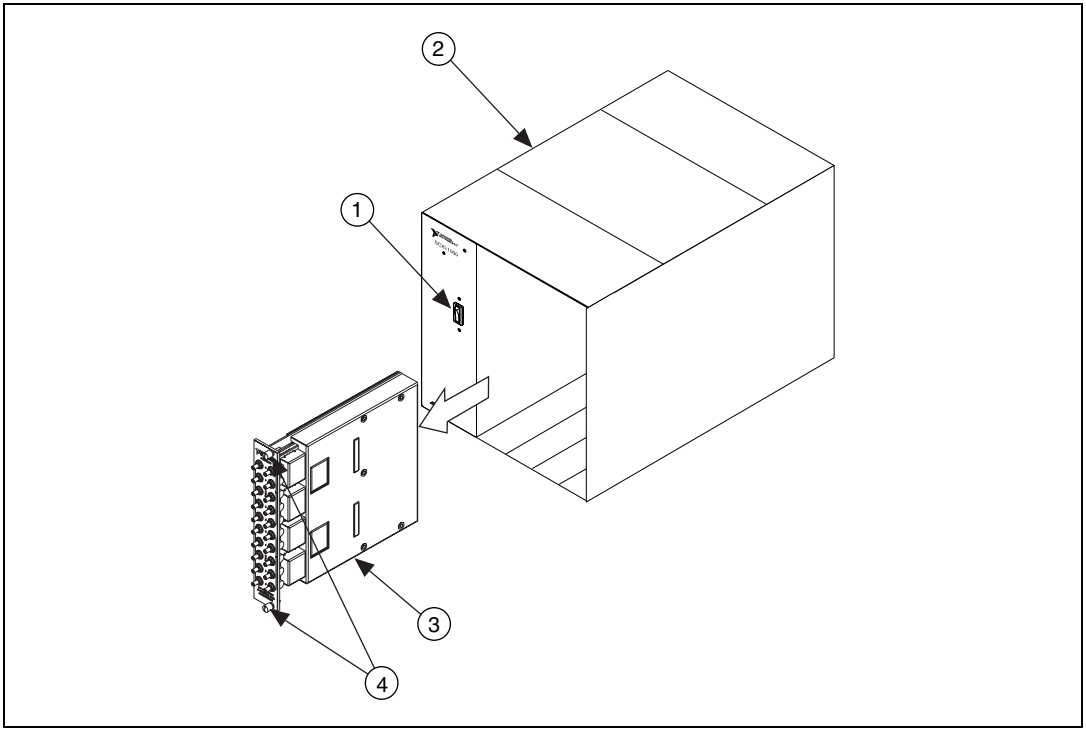

1	SCXI Chassis Power Switch	3	SCXI-119*X* (SCXI-1190 Shown)
2	SCXI Chassis (SCXI-1000 Shown)	4	SCXI Module Thumbscrews

Figure 1-3. Removing the SCXI-119*X*

1. Turn off the SCXI chassis power.
2. Remove all signals connected to the SCXI-119*X*.

Caution Do *not* remove the SCXI-119*X* module from a chassis that is turned on because doing so could damage the module.

3. Rotate the thumbscrews securing the SCXI-119*X* to the chassis counter-clockwise until they are loose, but do not completely remove the thumbscrews.
4. Remove the SCXI-119*X* by pulling steadily on both thumbscrews until the module slides completely out.

Removing the SCXI-119*X* from Measurement & Automation Explorer

To remove a module from MAX, complete the following steps:

1. Double-click the **Measurement & Automation Explorer** icon on your PC desktop.
2. Expand **Devices and Interfaces**. Locate the chassis in the list of installed devices.
3. Expand **Chassis**.
4. Right-click on the module or chassis you want to delete and select **Delete**.
5. You are presented a confirmation window. Click **Yes** to continue deleting the module or chassis or click **No** to cancel this action.

Note Deleting an SCXI chassis deletes all modules in the chassis. All configuration information for these modules is also lost.

Your SCXI chassis and/or SCXI module(s) should now be removed from the list of installed devices in MAX.

2

Using the SCXI-119*X*

This chapter contains a functional overview and connection possibilities of the SCXI-119*X* modules.

Functional Overview

The SCXI-1190 uses single-pole double-throw, high-bandwidth relays capable of switching signals from DC to 1.3 GHz. Functionally identical, the SCXI-1191 has a bandwidth of DC to 4 GHz. The SCXI-1192 module is a general-purpose, 8-channel, high-bandwidth relay module; it uses single-pole double-throw, high-bandwidth relays capable of switching signals from DC to 18 GHz.

Figure 2-1 illustrates the key functional components of the SCXI-1190/1191 multiplexer modules.

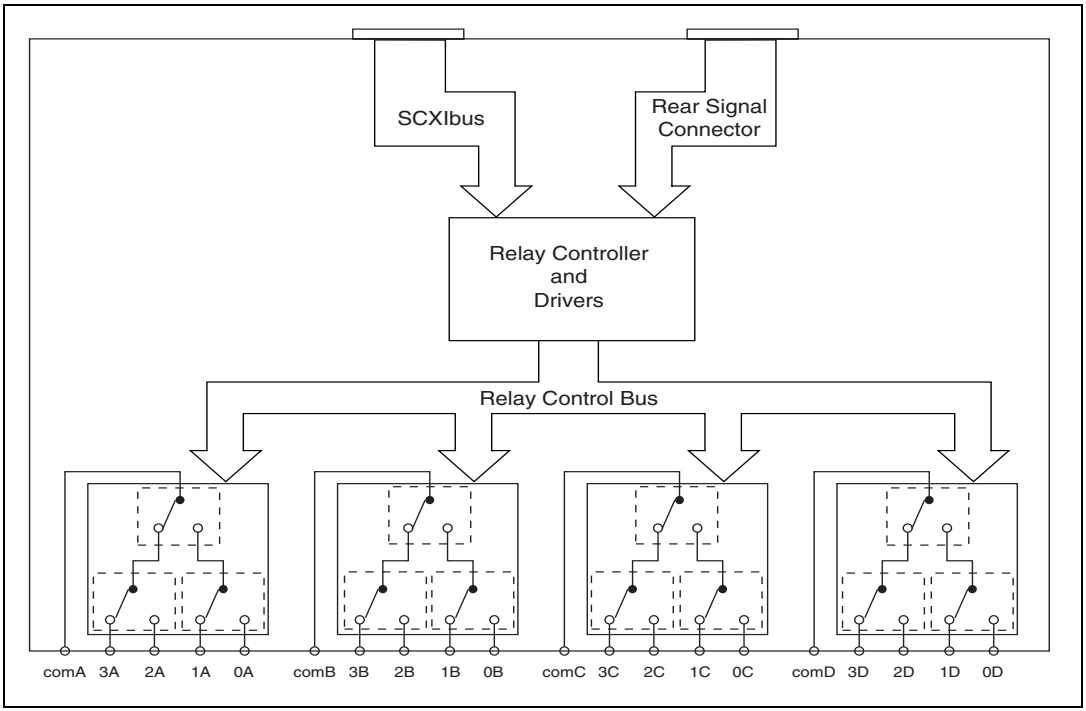

Figure 2-1. SCXI-1190/1191 Modules Block Diagram

Figure 2-2 illustrates the key functional components of the SCXI-1192 relay module.

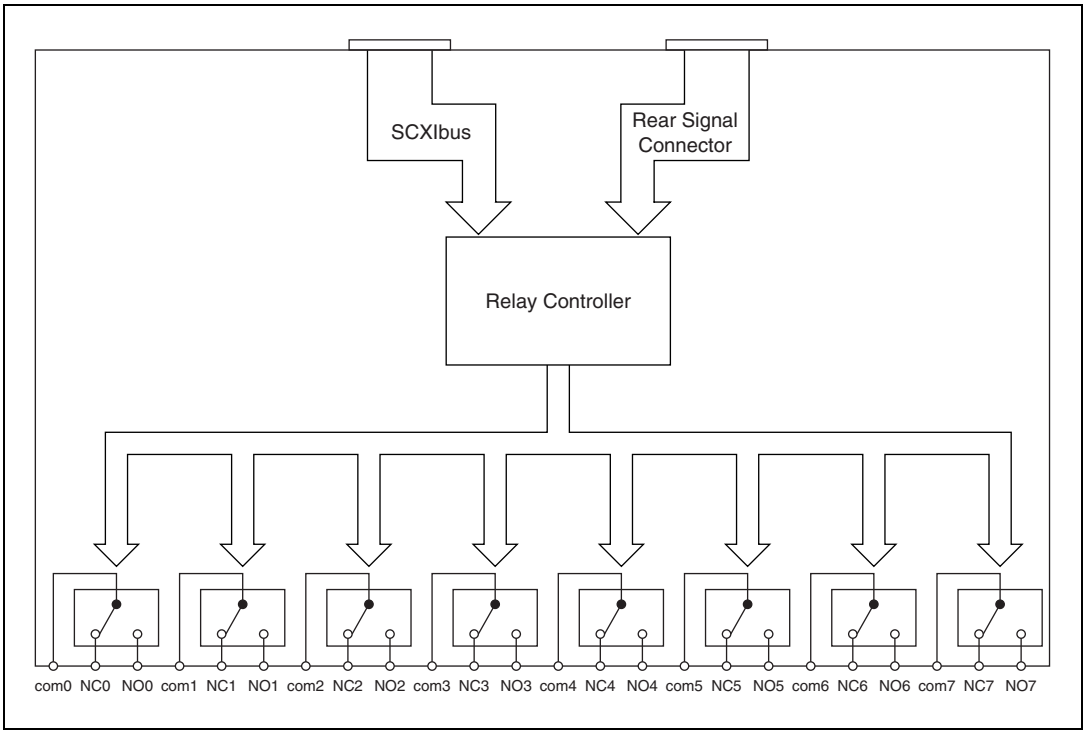

Figure 2-2. SCXI-1192 Module Block Diagram

RF Switching Precautions

The SCXI-119*X* are *reflective switches*, meaning that any channels not switched to the common channel are unterminated, and any signal on an unterminated channel is reflected to its source. For most low-power switching applications, this reflection is not a problem. However, operation with an unterminated output can damage some high-power RF sources. Consult your RF source documentation for more information about connecting to unterminated channels.

Warning Do *not* exceed the channel-to-ground rating of 24 V_{rms} or DC on the SCXI-1190, 30 V_{rms} or DC for the SCXI-1191, or 30 V_{rms} or DC for the SCXI-1192. Any connections that exceed the maximum voltage for the SCXI-119*X* can result in an electrical shock hazard and damage to the switch module and any or all of the modules connected to the

SCXI backplane. National Instruments is *not* liable for any damages or injuries resulting from exceeding maximum voltage ratings. Refer to Appendix A, *Specifications*, for specific information.

Caution Always disconnect all signals from the front connectors and power off the SCXI chassis before removing the SCXI-119*X* from the chassis. Observe electrostatic discharge handling precautions during and after removal of the module, or when connecting and disconnecting signals on the front panel.

Contact Protection

Caution The contacts of the relays are rated for a life of 5×10^6 mechanical operations when operated with no signal or a very small signal present. When high-power loads are switched, arcing can occur across the relay contacts that will reduce their useful life. See Appendix A, *Specifications*, for lifetime ratings for each module. If your setup allows, it is always best to turn off the input signals connected to the switch module during the switching operation to avoid contact arcing within the switch. Switching large inductive loads can also cause contact arcing. In such instances, install a flyback diode or varistor across the inductance to protect the switch.

Connecting Signals

The SCXI-1190 has push-on SMB connectors, and the SCXI-1191/1192 have screw-on SMA connectors as shown in Figure 2-3.

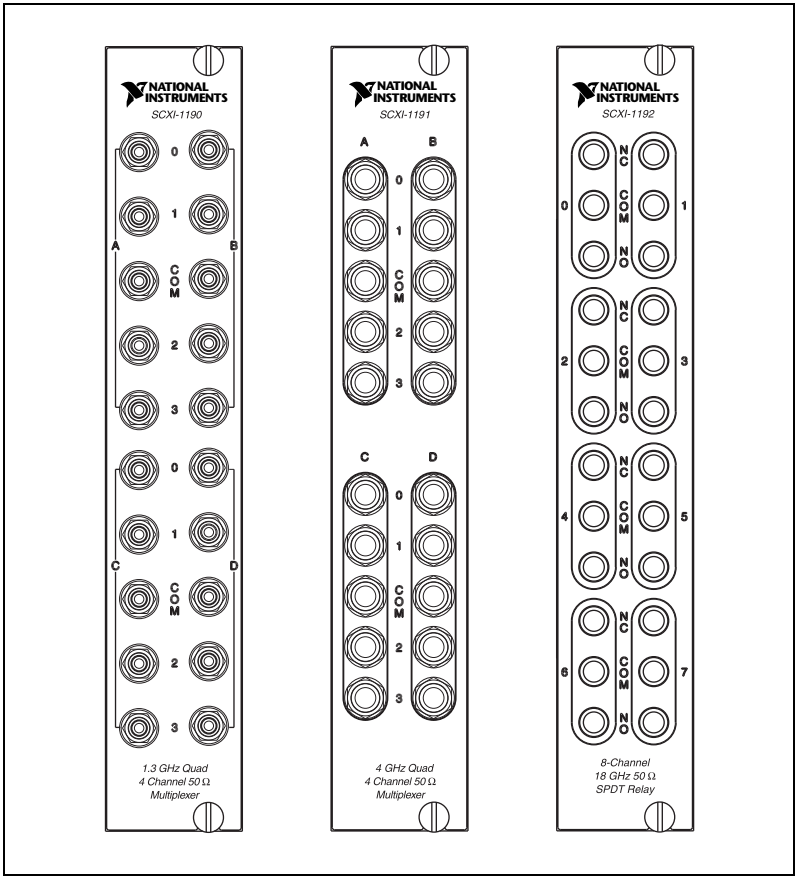

Figure 2-3. SCXI-1190 SMB Connectors, SCXI-1191/1192 SMA Connectors

Note The power-up and reset state of the different multiplexer banks on the SCXI-1190/1191 are as follows: banks A and C, channel 0 is connected to the COM terminal; banks B and D, channel 3 is connected is connected to the COM terminal. The reset mode of the SCXI-1192 connects NC to COM for all relays. Because it uses latching relays, the SCXI-1192 does not have a specific power-up state. Its relays will retain their state if they lose power.

Multiplexing to RF Sources

Figure 2-4 shows how to use the SCXI-1190/1191 to select one of four RF sources to be routed to a RF measurement device.

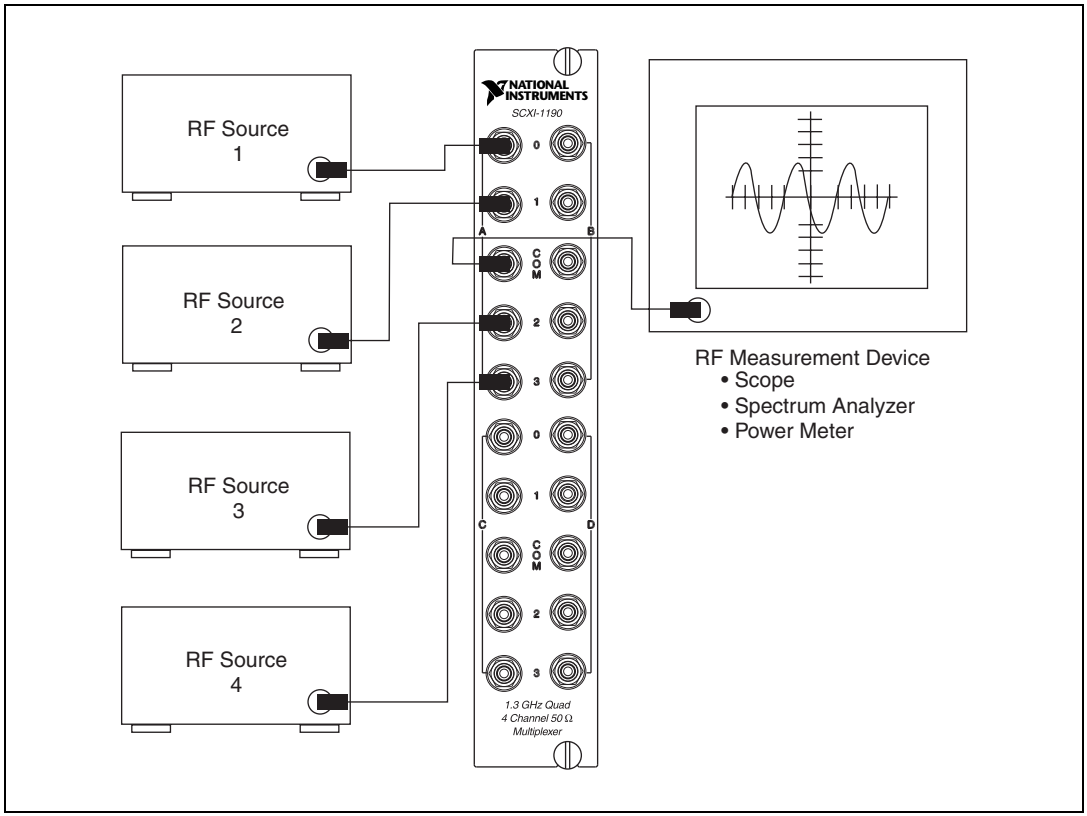

Figure 2-4. Connecting the SCXI-1190/1191

Figure 2-5 shows how to use the SCXI-1192 to route signals from two RF sources to one RF measurement device.

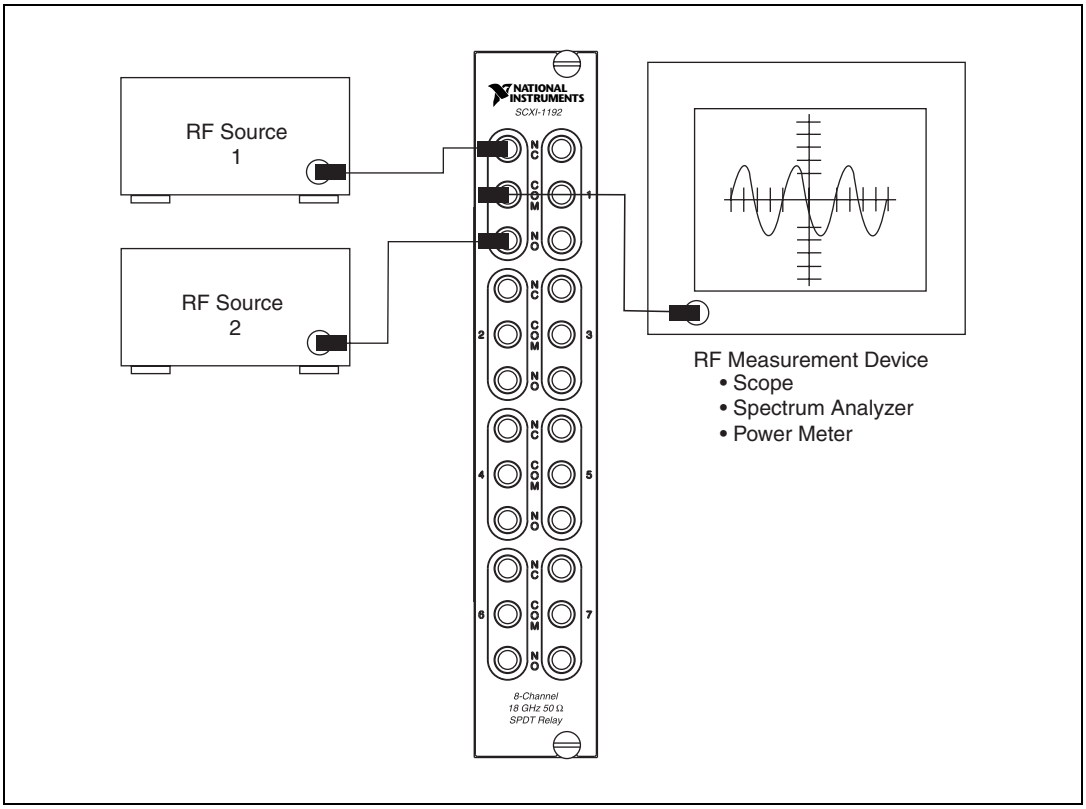

Figure 2-5. Connecting the SCXI-1192

Expanding the RF Multiplexer

Figure 2-6 shows how to expand the SCXI-1190/1191 by cascading stages together. In the specific case of Figure 2-6, the module is used to create a 13-to-1 multiplexer with a two-stage architecture. You can cascade several modules to provide even larger multiplexers.

Note Cascading multiplexers increases insertion loss, creates propagation delays, and can have other RF effects.

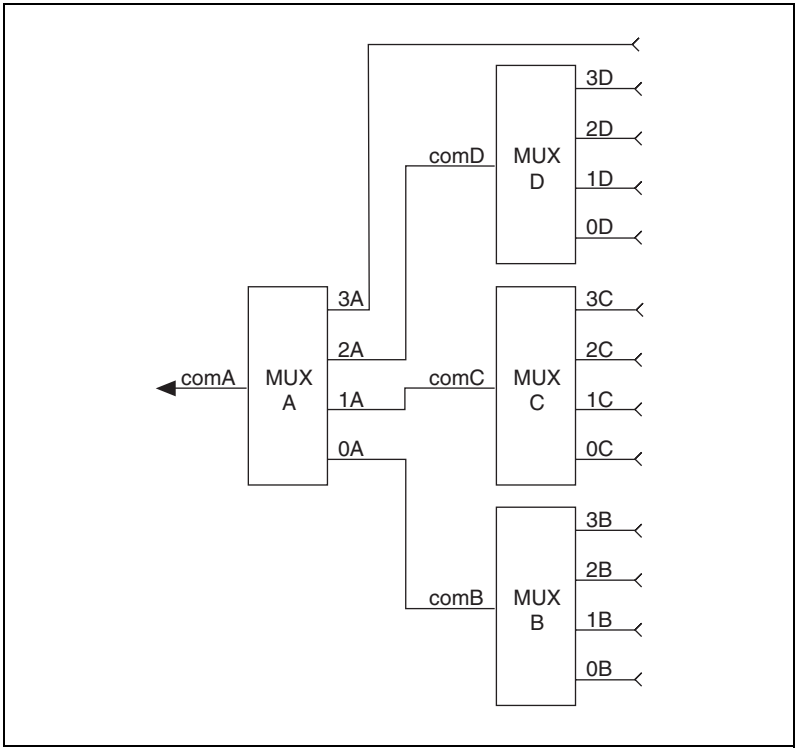

Figure 2-6. Expanding the SCXI-1190/1191

Figure 2-7 shows one possible expansion using two SCXI-1192 modules. In this case, the switches on two SCXI-1192 modules are interconnected to create a 2 × 4 matrix. Multiple configurations are possible using one or more SCXI-1192 modules.

Note Cascading switches increases insertion loss, creates propagations delays, and can have other RF effects.

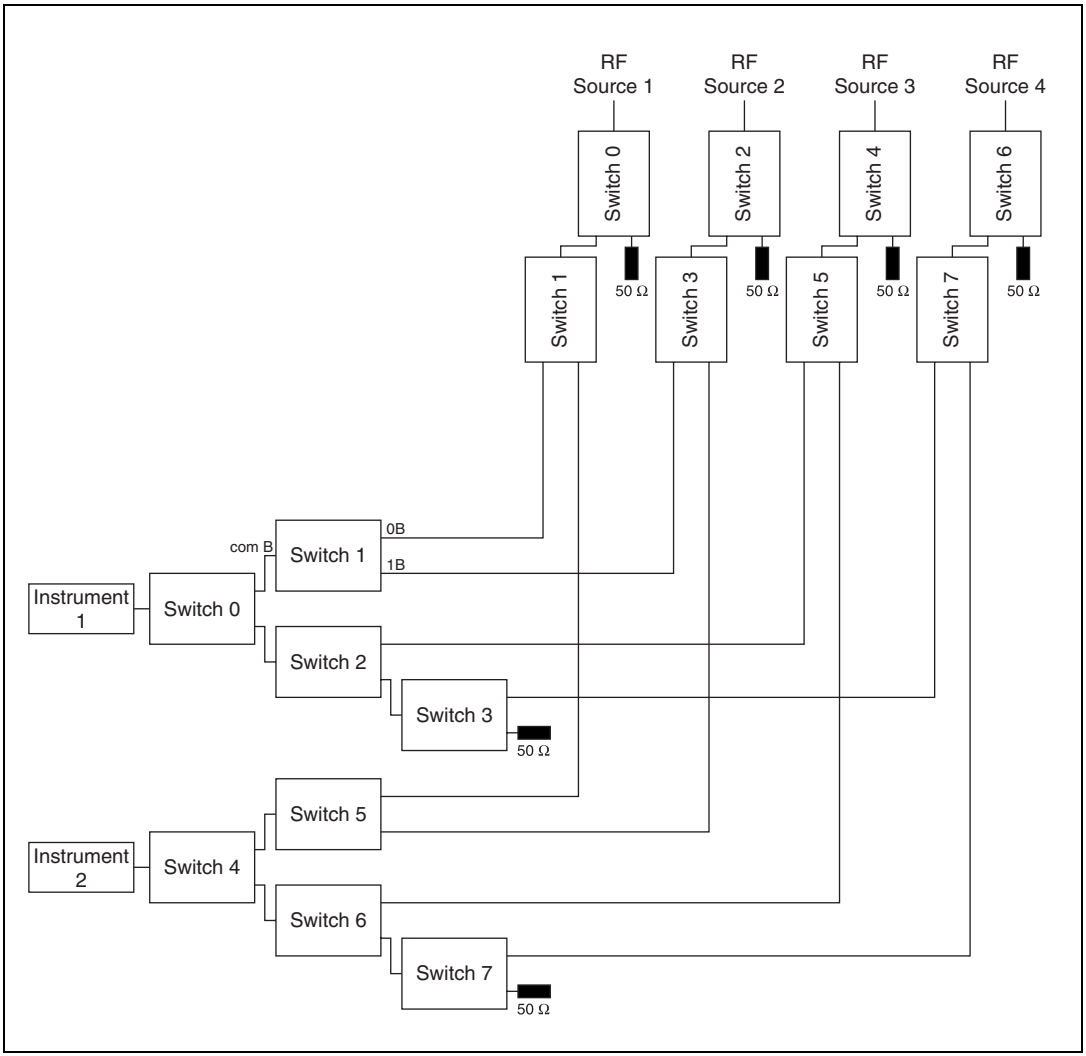

Figure 2-7. Expanding the SCXI-1192

A

Specifications

This appendix lists the specifications for the SCXI-1190, the SCXI-1191, and the SCXI-1192 multiplexer modules. These specifications are typical at 25 °C unless otherwise noted.

SCXI-1190

Input Characteristics

Number of banks 4

Number of channels per bank 4

Common-mode voltage

Channel to earth ..... 24 V_{rms} or DC

Maximum switching voltage

AC ..... 24 V_{rms}

DC ..... 24 VDC

Maximum switching capacity per channel

AC ..... 1 A_{rms} at 24 V_{rms}

DC ..... 1 ADC at 24 VDC

Maximum switching
power per channel ..... 24 W

Contact on resistance (initial) ..... 100 mΩ max

Contact material ..... Gold-clad silver

RF Performance Characteristics

Characteristic impedance (Z_0) .....50 Ω

Insertion loss at:

≤100 MHz.....<0.4 dB

≤500 MHz.....<0.9 dB

≤1.3 GHz .....<1.5 dB

≤2 GHz .....<3 dB

VSWR at:

≤100 MHz.....<1.15

≤500 MHz.....<1.35

≤1.3 GHz .....<1.5

≤2 GHz .....<2.5

Isolation:

≤500 MHz.....<–62 dB

≤1.3 GHz .....<–50 dB

≤2 GHz .....<–30 dB

Rise time .....<300 ps

Signal delay .....<3 ns

Maximum RF carry power
at 900 MHz .....10 W

Note Refer to the cautions and warning in Chapter 2, *Using the SCXI-119X*, for important information about using your SCXI-1190 with high-power signals.

Dynamic Characteristics

Relay operate time (at 20 °C)

Typical.....15 ms

Relay release time (at 20 °C)

Typical.....15 ms

Expected life

Mechanical (no load) ..... 5×10^6 operations

Electrical at maximum switching capacity..... 10^5 operations

Caution Exceeding the maximum switching capability decreases the expected life of the SCXI-1190.

Power Requirement

+5 VDC

Maximum (all relays closed) ..... 600 mA

Physical

Dimensions..... 17.30 by 19.56 by 3.02 cm (6.81 by 7.70 by 1.19 in.)

I/O connectors ..... 5 SMB male per bank; 4 banks

Environment

Operating temperature .....0 to 50 °C

Storage temperature.....–20 to 70 °C

Relative humidity ..... 10% to 90% noncondensing

Electromagnetic Compatibility

EMC/EMI..... CE, C-Tick, and FCC Part 15 (Class A) Compliant

Electrical emissions..... EN 55011 Class A at 10 m FCC Part 15A above 1 GHz

Electrical immunity..... Evaluated to EN 61326-1:1997 A1:1998, Table 1

Note For full EMC and EMI compliance, you must operate this device with shielded cabling. See the Declaration of Conformity (DoC) for this product for any additional regulatory compliance information. To obtain the DoC for this product, click **Declaration of Conformity** at `http://www.ni.com/hardref.nsf/`. This website lists the DoCs by product family. Select the appropriate product family, followed by your

product, and a link to the DoC (in Adobe Acrobat format) appears. Click the Acrobat icon to download or read the DoC.

Safety

Designed in accordance with IEC 61010-1, UL 3111-1, and CAN/CSA C22.2 No. 1010.1 for electrical measuring and test equipment.
Installation category II[1]
Pollution degree 2

Certifications and Compliances

CE Mark Compliance CE

See the Declaration of Conformity sheet accompanying product.

[1] Category II refers to local-level power distribution, such as that provided by a standard wall outlet.

SCXI-1191

Input Characteristics

Number of banks 4

Number of channels per bank 4

Common-mode voltage
- Channel to earth ..... 30 V_{rms} or DC

Maximum switching voltage
- AC ..... 30 V_{rms}
- DC ..... 30 VDC

Maximum switching capacity per channel
- AC ..... 0.33 A_{rms} at 30 V_{rms}
- DC ..... 0.33 ADC at 30 VDC

Maximum switching power per channel ..... 10 W

Contact on resistance (initial) ..... 200 mΩ max

Contact material ..... Gold

RF Performance Characteristics

Characteristic impedance (Z_0)..... 50 Ω

Insertion loss at:
- < 2.5 GHz..... < 0.6 dB
- < 4 GHz..... < 0.9 dB

VSWR at:
- < 2.5 GHz..... < 1.3
- < 4 GHz..... < 1.5

Isolation:

< 2.5 GHz .....< –60 dB

< 4 GHz .....< –55 dB

Maximum RF carry power
at 900 MHz .....10 W

Note Refer to the warning and cautions in Chapter 2, *Using the SCXI-119X*, for important information about using your SCXI-1191 with high-power signals.

Dynamic Characteristics

Relay operate time (at 20 °C)

Typical.....15 ms

Relay release time (at 20 °C)

Typical.....15 ms

Expected life

Mechanical (no load).....5×10^6 operations

Electrical at maximum
switching capacity .....10^5 operations

Caution Exceeding the maximum switching capability decreases the expected life of the SCXI-1191.

Power Requirement

+5 VDC

Maximum (all relays closed).....950 mW

Physical

Dimensions .....17.30 by 19.56 by 3.02 cm
(6.81 by 7.70 by 1.19 in.)

I/O connector .....5 SMA female per bank
4 banks

Environment

Operating temperature .....0 to 50 °C

Storage temperature.....–20 to 70 °C

Relative humidity ..... 10% to 90% noncondensing

Electromagnetic Compatibility

EMC/EMI..... CE, C-Tick, and FCC Part 15 (Class A) Compliant

Electrical emissions..... EN 55011 Class A at 10 m
FCC Part 15A above 1 GHz

Electrical immunity..... Evaluated to EN 61326-1:1997 A1:1998, Table 1

Note For full EMC and EMI compliance, you must operate this device with shielded cabling. See the Declaration of Conformity (DoC) for this product for any additional regulatory compliance information. To obtain the DoC for this product, click **Declaration of Conformity** at `http://www.ni.com/hardref.nsf/`. This website lists the DoCs by product family. Select the appropriate product family, followed by your product, and a link to the DoC (in Adobe Acrobat format) appears. Click the Acrobat icon to download or read the DoC.

Safety

Designed in accordance with IEC 61010-1, UL 3111-1, and CAN/CSA C22.2 No. 1010.1 for electrical measuring and test equipment.
Installation category II[1]
Pollution degree 2

Certifications and Compliances

CE Mark Compliance CE

See the Declaration of Conformity sheet accompanying product.

[1] Category II refers to local-level power distribution, such as that provided by a standard wall outlet.

SCXI-1192

Input Characteristics

Number of relays 8

Number of channels per relay.....2

Common-mode voltage

Channel to earth.....30 V_{rms} or DC

Maximum switching voltage

DC.....30 VDC

Maximum carry current per channel

DC.....2 A

Maximum continuous input power per channel (continuous wave)

1–3 GHz.....120 W

3–8 GHz.....80 W

8–12.4 GHz.....60 W

12.4–18 GHz.....50 W

Contact on resistance (initial).....100 mΩ max

Contact material.....Gold plate

RF Performance Characteristics

Characteristic impedance (Z_0) .....50 Ω

Insertion loss at:

≤4 GHz .....≤0.2 dB

4 to 8 GHz .....≤0.3 dB

8 to 12.4 GHz .....≤0.4 dB

12.4 to 18 GHz .....≤0.5 dB

VSWR at:

≤1 GHz .....≤1.1

1 to 4 GHz .....≤1.15

4 to 8 GHz .....≤1.25

8 to 12.4 GHz..... ≤1.35
12.4 to 18 GHz..... ≤1.5

Isolation:
≤1 GHz..... ≤–85 dB
1 to 4 GHz..... ≤–80 dB
4 to 8 GHz..... ≤–70 dB
8 to 12.4 GHz..... ≤–65 dB
12.4 to 18 GHz..... ≤–60 dB

Note Refer to the cautions and warning in Chapter 2, *Using the SCXI-119X*, for important information about using your SCXI-1192 with high-power signals.

Dynamic Characteristics

Relay operate time (at 20 °C)
Typical ..... 15 ms

Relay release time (at 20 °C)
Typical ..... 15 ms

Expected life
Mechanical (no load) ..... 5×10^6 operations
Electrical at 5 W ..... 5×10^6 operations (to 3 GHz, 50 Ω, VSWR max 1.2)

Caution Exceeding these electrical parameters decreases the expected life of the SCXI-1192.

Power Requirement

+5 VDC
Maximum (simultaneous transition of all relays) ..... 800 mA

Physical

Dimensions..... 17.30 by 19.56 by 3.02 cm (6.81 by 7.70 by 1.19 in.)

I/O connector..... 3 SMA female per relay
8 relays

Environment

Operating temperature ..... 0 to 50 °C

Storage temperature ..... –20 to 70 °C

Relative humidity .....10% to 90% noncondensing

Electromagnetic Compatibility

EMC/EMI .....CE, C-Tick, and FCC Part 15 (Class A) Compliant

Electrical emissions .....EN 55011 Class A at 10 m
FCC Part 15A above 1 GHz

Electrical immunity .....Evaluated to EN 61326-1:1997 A1:1998, Table 1

Note For full EMC and EMI compliance, you must operate this device with shielded cabling. See the Declaration of Conformity (DoC) for this product for any additional regulatory compliance information. To obtain the DoC for this product, click **Declaration of Conformity** at `http://www.ni.com/hardref.nsf/`. This website lists the DoCs by product family. Select the appropriate product family, followed by your product, and a link to the DoC (in Adobe Acrobat format) appears. Click the Acrobat icon to download or read the DoC.

Safety

Designed in accordance with IEC 61010-1, UL 3111-1, and CAN/CSA C22.2 No. 1010.1 for electrical measuring and test equipment.
Installation category II[1]
Pollution degree 2

[1] Category II refers to local-level power distribution, such as that provided by a standard wall outlet.

B

Common Questions

This appendix addresses common questions you may have while using your SCXI-119*X* switching module.

The SCXI-1190 is listed to have a 1.3 GHz bandwidth. Can I use it at 2 GHz bandwidth?

The SCXI-1190 can definitely be used at 2 GHz, as long as the isolation, VSWR, and attenuation levels are acceptable for your particular application. Refer to Appendix A, *Specifications*, for a complete list of the parameters at 2 GHz.

What should I do if the software detects the module but the switches do not switch?

- Verify that the switches do not switch by trying to close and open the switches. You can verify the switches functionality by using the NI-SWITCH Soft Front Panel.
- Also be sure to check the return codes of the NI-SWITCH operation to ensure that there are no errors (negative value) or warnings (positive value).
- Finally, verify that your code is correct. For reference, see the examples described in the *NI-SWITCH Software User Manual*. The NI-SWITCH driver ships with several examples in source code. Compare your algorithm to those in the examples.

Do I need to program the switch module myself?

The SCXI-119*X* comes with the NI-SWITCH driver software, which exports the full functionality of the module. NI-SWITCH handles the complex issues of direct memory access, interrupts, and operating system interfacing for you. All you need to do is make high-level calls to these functions from your ADE.

One of my modules doesn't switch properly anymore. What's wrong?

One of the relays may have worn out. Relays are mechanical devices and have a limited switching lifetime. Call National Instruments for information on replacing your relays.

What is VSWR, and how does it affect my system?

VSWR stands for Voltage Standing Wave Ratio; it is a measure of the reflection on a transmission line. The percentage of a signal reflected back to the source is equal to (VSWR-1)/(VSWR+1). This means that a VSWR of 1 is optimum, with no reflected signal. On higher power applications, a large VSWR can damage the output stage of the source. High VSWR also means that a large percentage of the power from the source cannot be delivered to the load.

What is isolation, and why is it important?

Isolation is a measure of the amount of crosstalk between channels in a bank. For example, if a 1 Vp-p signal is isolated by 40 dB to another channel, then 10 mVp-p will be seen on the adjacent channel (in addition to the signal already on the channel). Higher channel-to-channel isolation results in lower crosstalk.

C

Technical Support Resources

Web Support

National Instruments Web support is your first stop for help in solving installation, configuration, and application problems and questions. Online problem-solving and diagnostic resources include frequently asked questions, knowledge bases, product-specific troubleshooting wizards, manuals, drivers, software updates, and more. Web support is available through the Technical Support section of `ni.com`

NI Developer Zone

The NI Developer Zone at `ni.com/zone` is the essential resource for building measurement and automation systems. At the NI Developer Zone, you can easily access the latest example programs, system configurators, tutorials, technical news, as well as a community of developers ready to share their own techniques.

Customer Education

National Instruments provides a number of alternatives to satisfy your training needs, from self-paced tutorials, videos, and interactive CDs to instructor-led hands-on courses at locations around the world. Visit the Customer Education section of `ni.com` for online course schedules, syllabi, training centers, and class registration.

System Integration

If you have time constraints, limited in-house technical resources, or other dilemmas, you may prefer to employ consulting or system integration services. You can rely on the expertise available through our worldwide network of Alliance Program members. To find out more about our Alliance system integration solutions, visit the System Integration section of `ni.com`

Worldwide Support

National Instruments has offices located around the world to help address your support needs. You can access our branch office Web sites from the Worldwide Offices section of `ni.com`. Branch office Web sites provide up-to-date contact information, support phone numbers, e-mail addresses, and current events.

If you have searched the technical support resources on our Web site and still cannot find the answers you need, contact your local office or National Instruments corporate. Phone numbers for our worldwide offices are listed at the front of this manual.

Glossary

Prefix	Meanings	Value
n-	nano-	10^{-9}
m-	milli-	10^{-3}
M-	mega-	10^{6}
G-	giga-	10^{9}

Symbols

°	degrees
Ω	ohms
%	percent

A

A	amperes
AC	alternating current
ADC	amperes, direct current
ADE	application development environment such as LabVIEW, LabWindows/CVI, Visual Basic, and C or C++
A_{rms}	amperes, root-mean-square

C

C	Celsius
channel	pin or wire lead on the switch to which you apply or from which you read the analog or digital signal. Signals can be single-ended or differential.

D

DAQ	data acquisition
dB	decibel
DC	direct current
device	a plug-in board, card, or pad that can contain multiple channels and conversion devices. Some examples of devices are computers, multimeters, multiplexers, oscillators, operator interfaces, and counters.
digital multimeter	a multifunction meter used to make measurements such as voltage, current, resistance frequency, temperature, and so on
DMM	*See* digital multimeter
drivers/driver software	software that controls a specific hardware device such as a switch card

H

Hz	hertz—the number of scans read or updates written per second

I

isolation	a measure of the amount of cross-talk between channels
IVI	Interchangeable Virtual Instrument
in.	inches

M

MB	megabytes of memory
multiplexer	a switching device with multiple inputs that sequentially connects each of its inputs to its output, typically at high speeds, in order to measure several signals with a single analog input channel

N

NI-SWITCH	an IVI-based instrument driver that supports the National Instruments line of switch cards

P

PXI	PCI with eXtensions for Instrumentation

R

RF	radio frequency
relay	a switch that connects or disconnects the signal to a common through the physical movement of a metal arm
rms	root mean square—the square root of the average value of the square of the instantaneous signal amplitude; a measure of signal amplitude

S

s	seconds
SCXI	Signal Conditioning eXtensions for Instrumentation—the National Instruments product line for conditioning low-level signals within an external chassis near sensors so only high-level signals are sent to DAQ boards in the noisy PC environment

V

V	volts
VDC	volts, direct current
Vp-P	volts peak to peak

V_{rms}	volts, root-mean-square
VSWR	Voltage Standing Wave Ratio

W

W	watts

Index

A

auto-detection of modules, 1-9 to 1-10

B

block diagrams
    SCXI-1190/1191, 2-2
    SCXI-1192, 2-2

C

certifications and compliances
    SCXI-1190, A-4
    SCXI-1191, A-7
common questions, B-1 to B-2
configuration, 1-9 to 1-12
    auto-detecting modules, 1-9 to 1-10
    manually adding modules, 1-10
    procedure for, 1-9
    self-test verification, 1-11
    troubleshooting self-test verification, 1-11 to 1-12
connecting SCXI-119*X* to DAQ device
    DAQ device or computer-based instrument, 1-6 to 1-8
    in PXI combination chassis, 1-8
connecting signals, 2-5 to 2-9
    expanding RF multiplexer, 2-8 to 2-9
    multiplexing to RF sources, 2-6 to 2-7
    SMA and SMB connectors (figure), 2-5
contact protection, 2-4
conventions used in manual, *vi*
customer education, C-1

D

DAQ device. *See* connecting SCXI-119*X* to DAQ device.
dynamic characteristics
    SCXI-1190, A-2 to A-3
    SCXI-1191, A-6
    SCXI-1192, A-9

E

electromagnetic compatibility
    SCXI-1190, A-3
    SCXI-1191, A-7
    SCXI-1192, A-10
environment specifications
    SCXI-1190, A-3
    SCXI-1191, A-7
    SCXI-1192, A-10
expanding RF multiplexer, 2-8 to 2-9

F

functional overview, 2-1 to 2-3

H

hardware installation. *See* installation.

I

input characteristics
    SCXI-1190, A-1
    SCXI-1191, A-5
    SCXI-1192, A-8

installation, 1-2 to 1-8
connecting SCXI-119*X* to DAQ device
DAQ device or computer-based instrument, 1-6 to 1-8
in PXI combination chassis, 1-8
removing SCXI-119*X,* 1-13 to 1-14
from Measurement & Automation Explorer, 1-14
from SCXI chassis, 1-13 to 1-14
into SCXI chassis, 1-4 to 1-6
software installation, 1-2 to 1-3
unpacking, 1-4
isolation, defined, B-2

M

Measurement & Automation Explorer (MAX)
auto-detecting modules, 1-9 to 1-10
configuration procedure, 1-9
manually adding modules, 1-10
removing SCXI-119*X,* 1-14
self-test verification, 1-11
troubleshooting, 1-11 to 1-12
multiplexing
expanding RF multiplexer, 2-8 to 2-9
multiplexing to RF sources, 2-6 to 2-7

N

NI Developer Zone, C-1
NI-SWITCH software, 1-2

P

physical specifications
SCXI-1190, A-3
SCXI-1191, A-6
SCXI-1192, A-9
power requirement specifications
SCXI-1190, A-3
SCXI-1191, A-6
SCXI-1192, A-9
PXI combination chassis, connecting with SCXI-119*X,* 1-8

Q

questions and answers, B-1 to B-2

R

reflective switch, 2-3
removing SCXI-119*X,* 1-13 to 1-14
from Measurement & Automation Explorer, 1-14
from SCXI chassis, 1-13 to 1-14
RF multiplexer, expanding, 2-8 to 2-9
RF performance characteristics
SCXI-1190, A-2
SCXI-1191, A-5 to A-6
SCXI-1192, A-8 to A-9
RF sources
multiplexing to, 2-6 to 2-7
RF switching precautions, 2-3 to 2-4

S

safety
contact protection, 2-4
RF switching precautions, 2-3 to 2-4
safety instructions, 1-3
safety specifications
SCXI-1190, A-4
SCXI-1191, A-7
SCXI-1192, A-10
SCXI chassis
installing SCXI-119*X* into, 1-4 to 1-6
removing SCXI-119*X* from, 1-13 to 1-14

SCXI-119*X*
block diagrams, 2-2 to 2-3
common questions, B-1 to B-2
configuration and self-test, 1-9 to 1-12
connecting signals, 2-5 to 2-9
contact protection, 2-4
functional overview, 2-1 to 2-3
installation, 1-2 to 1-8
overview, 1-1
RF switching precautions, 2-3 to 2-4
safety instructions, 1-3
specifications
SCXI-1190, A-1 to A-4
SCXI-1191, A-5 to A-7
SCXI-1192, A-8 to A-10
self-test verification
procedure for, 1-11
troubleshooting, 1-11 to 1-12
signal connections, 2-5 to 2-9
expanding RF multiplexer, 2-8 to 2-9
multiplexing to RF sources, 2-6 to 2-7
SMA and SMB connectors (figure), 2-5
software installation, 1-2 to 1-3
specifications
SCXI-1190, A-1 to A-4
certifications and compliances, A-4
dynamic characteristics, A-2 to A-3
electromagnetic compatibility, A-3
environment, A-3
input characteristics, A-1
physical, A-3
power requirement, A-3
RF performance characteristics, A-2
safety, A-4
SCXI-1191, A-5 to A-7
certifications and compliances, A-7
dynamic characteristics, A-6
electromagnetic compatibility, A-7
environment, A-7
input characteristics, A-5
physical, A-6
power requirement, A-6
RF performance characteristics, A-5 to A-6
safety, A-7
SCXI-1192, A-8 to A-10
dynamic characteristics, A-9
electromagnetic compatibility, A-10
environment, A-10
input characteristics, A-8
physical, A-9
power requirements, A-9
RF performance characteristics, A-8 to A-9
safety, A-10
system integration, by National Instruments, C-1

T

technical support resources, C-1 to C-2
troubleshooting common problems, B-1 to B-2

V

Voltage Standing Wave Ratio (VSWR), B-2

W

Web support from National Instruments, C-1
Worldwide technical support, C-2