Artisan Technology Group

Artisan Technology Group is your source for quality new and certified-used/pre-owned equipment

- FAST SHIPPING AND DELIVERY
- TENS OF THOUSANDS OF IN-STOCK ITEMS
- EQUIPMENT DEMOS
- HUNDREDS OF MANUFACTURERS SUPPORTED
- LEASING/MONTHLY RENTALS
- ITAR CERTIFIED SECURE ASSET SOLUTIONS

SERVICE CENTER REPAIRS
Experienced engineers and technicians on staff at our full-service, in-house repair center

InstraView℠ REMOTE INSPECTION
Remotely inspect equipment before purchasing with our interactive website at ***www.instraview.com*** ↗

WE BUY USED EQUIPMENT
Sell your excess, underutilized, and idle used equipment
We also offer credit for buy-backs and trade-ins
www.artisantg.com/WeBuyEquipment ↗

LOOKING FOR MORE INFORMATION?
Visit us on the web at ***www.artisantg.com*** ↗ for more information on price quotations, drivers, technical specifications, manuals, and documentation

Contact us: (888) 88-SOURCE | sales@artisantg.com | www.artisantg.com

A/D & D/A Module with Digital I/O Models 6060/6061

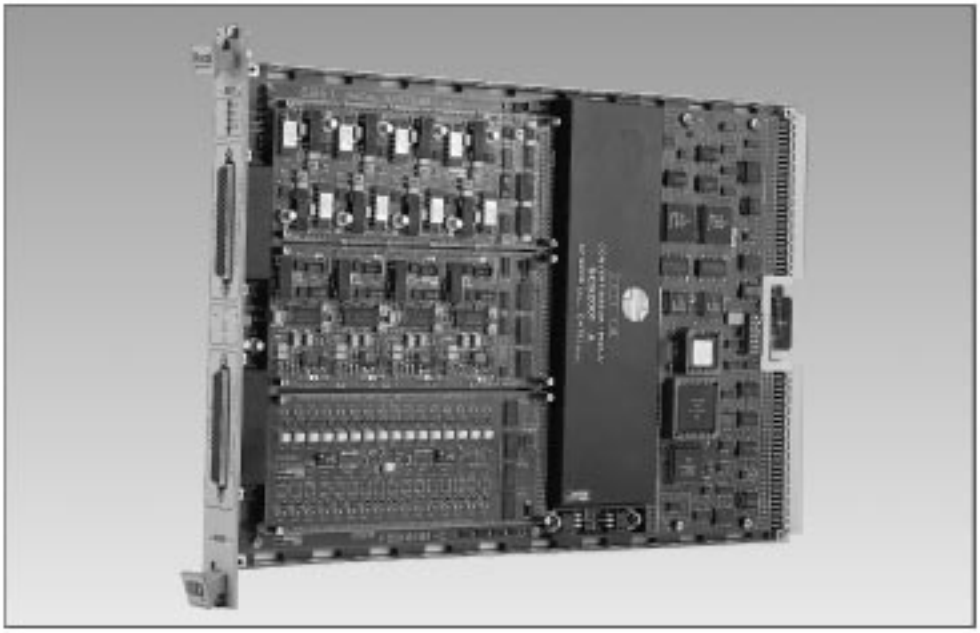

- **Unique Combinations of Analog and Digital Channels**
- **12 Bit Resolution on Analog Channels**
- **16 Isolated or Non-isolated Input/Output Channels**
- **32 Digital Channels**
- **Message-based, SCPI Compatible**
- **Internal Trace Memory for Data Storage and Waveform Output**

The 6060 and 6061 modules provide a unique combination of analog and digital channels in a single-slot, C-size VXIbus module. A number of configurations of inputs and outputs, either isolated or non-isolated, are available optimizing the modules for each application.

Multiple Configurations
The modular design concept of the 6060/6061 Series gives a choice of eight different configurations with different types of inputs and outputs, analog or digital, enabling them to cover a wide range of applications.

Triggering Capability
Triggering can be accomplished via the VXIbus TTLTRG lines, two external trigger lines, SCPI command or by an internal timer.

The internal programmable timer is used to control the timing on each channel. Additional triggering capability allows the module to be used as a multi-channel low frequency, arbitrary waveform generator.

Isolated Channels
Model 6061 provides analog channels with 750 Volts of isolation between channels and between each channel and ground.

Powerful Waveform Memory Capability
The internal memory with trace mode capability allows the user to replace several low frequency arbitrary function generators.

For your local Racal Instruments Sales Office see page 173.

Artisan Technology Group - Quality Instrumentation ... Guaranteed | (888) 88-SOURCE | www.artisantg.com

The module's 256 kBytes of internal memory can be used to generate signals on the analog or digital outputs or to store measured data from the analog or digital inputs. The user can easily define the size and name for each channel using the SCPI commands. As an option, the memory can be extended to 512 kBytes. The memory can program the outputs to fluctuate, simulating voltage ripple. This is useful when testing power supplies for line regulation.

The 6060/6061A versions include 8 analog output channels, 8 analog input channels and 32 digital input/output channels. Other configurations provide either 16 analog inputs or 16 analog outputs rather than 8 of each.

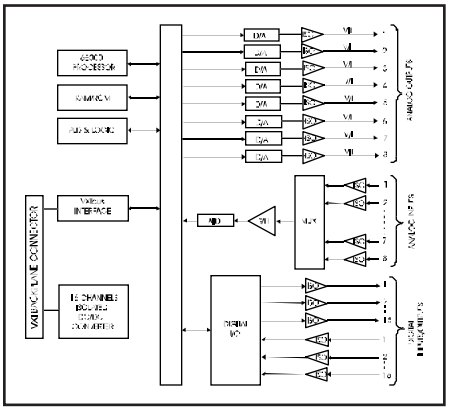

6061A Block Diagram

Self Test

An internal self-test gives the user a high level of confidence that the module is completely functional. The self-test covers all channels, analog and digital. This feature is very important for test system applications.

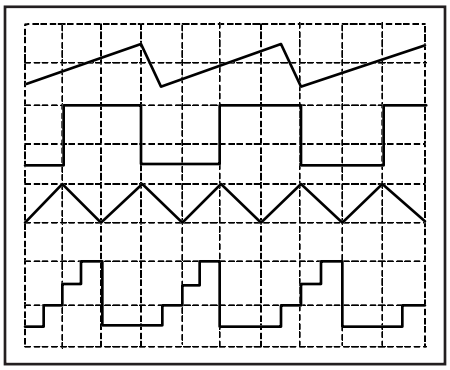

Example Output Waveforms

SCPI Capability

The 6060 and 6061 are message-based VXIbus modules, fully compatible with Revision 1.4 of the VXIbus Specification. In addition, these modules can be programmed using SCPI compatible commands.

Example Signal Generation Screen from the VXIplug&play Driver Soft Front Panel

Automotive Industry Applications

The combination of digital and analog channels in one module make the Models 6060 and 6061 useful for the production test of automotive components and related equipment.

An important application uses the 6060/6061 to simulate inputs and outputs of automotive engine control units (ECU's) where the analog outputs are used as multiple low-frequency and DC function generators. The analog inputs provide verification of control signals. The digital I/O channels control the ECU and read back status. For example, a fuel injection computer must control the opening of the mixing chamber, engine rotation, oil pressure, temperature and battery voltage. To simulate these signals, D/A outputs are used, and the A/D inputs are used to store the signals generated by the unit under test.

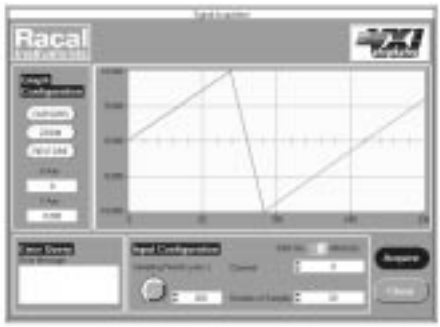

Example Signal Acquisition Screen from the VXIplug&play Driver Soft Front Panel

Model	Isolated Inputs/Outputs	Digital Channels Inputs/Outputs	Analog Inputs	Analog Outputs
6060A	No	32	8	8
6060B	No	32	-	16
6060C	No	32	16	-
6060D	No	32	-	-
6061A	Yes	32	8	8
6061B	Yes	32	-	16
6061C	Yes	32	16	-
6061PS	Yes	32	8	8

For your local Racal Instruments Sales Office see page 173.
Artisan Technology Group - Quality Instrumentation ... Guaranteed | (888) 88-SOURCE | www.artisantg.com

6060/6061 Specifications

ANALOG OUTPUT CHARACTERISTICS

Number of Channels
A Model: 8
B Model: 16
C or D Model: 0

Scan Rate
16 Channels: >2.7kHz
8 Channels: >4.7kHz
1 Channel: >14kHz

Resolution
12 bits

Accuracy (23°C ± 5°C)
Standard: ±(0.1% FSR + 0.3mV)
Opt. 01: ±(0.1% FSR + 0.5mV)
Opt. 03: ±(0.2% FSR + 2µA)

Linearity
0.1%FSR

Ranges
Standard: 1V, 5V, 10V, ±1V, ±5V, ±10V
Option 1: 1.6V, 8V, 16V, ±1.6V, ±8V, ±16V
Option 3: 2mA, 10mA, 20mA

Temperature Coefficient
Standard: (0.02%FSR + 0.2mV)/°C
Option 1: (0.03%FSR + 0.3mV)/°C
Option 3: (0.04%FSR + 0.4µA)/°C

AC Rejection
80dB (50/60Hz)

Peak Noise (20Hz to 20MHz)
Standard: 10mV
Option 1: 20mV
Option 3: 100µA

Leakage Current
$10\mu A_{rms}$

Slew Rate
0.1V/µs

Settling Time (±1% of setting)
Standard, Option 3: 50µs
Option 1: 80µs

Maximum Output Loading
Standard, Option 1: 20mA (35°C)
Option 3: 300Ω

Output Impedance
Standard, Option 1: <2Ω
Option 3: 50kΩ

Isolation Voltage (6061 Models)
750Vrms (50/60Hz)

ANALOG INPUT CHARACTERISTICS

Number of Channels
A Model: 8
C Model: 16
B or D Model: 0

Scan Rate
16 Channels: >2.5kHz
8 Channels: >4.3kHz
1 Channel: >11kHz

Resolution
12 bits

Accuracy (23°C ± 5°C)
±10V (or ±16V) Range: ±0.1% FSR
All Other Ranges: ±0.15% FSR

Ranges
Standard: 1V, 5V, 10V, ±1V, ±5V, ±10V
Option 1: 1.6V, 8V, 16V, ±1.6V, ±8V, ±16V

Temperature Coefficient
Standard: (0.02%FSR + 0.5mV)/°C
Option 1: (0.03%FSR + 1mV)/°C

Linearity
±10V, 10V (or ±16V, 16V) Ranges: 0.03% FSR
All Other Ranges: 0.05% FSR

AC Rejection
70dB (50/60Hz)

Digitization Noise
Standard: ±(0.05%+5mV)
Option 1: ±(0.05%+8mV)

Overvoltage Protection
250Vrms (50/60Hz)

Leakage Current
$10\mu A_{rms}$

Slew Rate
0.1V/µs

Input Impedance
1MΩ || 1nF

Isolation Voltage (6061 Models)
750Vrms (50/60Hz)

DIGITAL I/O CHARACTERISTICS

Types
Standard: Current Receiver Inputs, Open Collector Outputs
Option 2: TTL Inputs/Outputs

Number of Channels
Standard: 16 Input, 16 Output
Option 2: 32 Input/Output (Software Configurable)

Scan Rate
16 Channels: >2.7kHz
8 Channels: >5kHz
1 Channel: >16.6kHz

Open Collector Outputs
I_{sink} (max): 50mA
V_{pullup} Range: 3V to 35V
Slew Rate: >0.5V/µs

Current Receiver Inputs
V_{pullup} Range: 3V to 35V
I_{in} (max): 5mA (regulated)
V_{IL} (max): 2V

TTL Outputs (Option 2)
I_{OH} (max): -0.1mA
I_{OL} (max): +20mA
V_{OL}: 0.6V (I_{OL} = +5mA)
V_{OH}: 2.4V (I_{OH} = -50µA)
Fanout: 10ALS TTL Loads
Transition Time: <50ns

TTL Inputs (Option 2)
V_{in} (max): 5.5V
V_{th}: >2V
V_{IL}: <0.8V
I_{OH}: 20µA (Vin = 2.7V)
I_{OL}: -0.1mA (Vin = 0.4V)

Isolation Voltage
Standard: 750Vrms (50/60Hz)
Option 2: Ground Referenced

TRIGGERING CHARACTERISTICS

Sources
TTLTrg0-7
*TRG (Word Serial)
Trigger Timer
External Trigger (2)

Modes
IMMediate: Trigger immediately.
ECOunt: Number of trigger events to be counted before a cycle occurs.
COUNt: Number of cycles to occur per trigger event.

Trigger Timer Period Range
8µs to 2.2min.

WAVEFORM MEMORY

Access Formats
ASCII, Hexadecimal, Binary

Channel Memory
Standard: 256kB
Option 4: Additional 256kB

Memory Format
Segmentable
Linkable to Each Output
User Defined Length

FRONT PANEL I/O

Analog I/O
78 Pin Hi-Density D-sub, female
32 Analog Input and/or Analog Output Pins

Digital I/O
78 Pin Hi-Density D-sub, female
32 Digital I/O Channels
External Trigger Inputs (2)
Trigger Output (TTL)

Artisan Technology Group - Quality Instrumentation ... Guaranteed | (888) 88-SOURCE | www.artisantg.com

6060/6061 Specifications Continued

VXIbus INTERFACE DATA
(Single-slot, C-sized, VXIbus Rev. 1.4)

Drivers
LabVIEW, LabWindows/CVI, VXI*plug&play* (WIN, WIN95, WINNT)

Native Language
SCPI

Backplane Signal Support
TTLTrg0-7: Trigger Event Input, Sync Output

Self-Test
65% @ 25°C

Status Lights
Red: Failed
Green: Analog I/O Board #1 Enabled
Yellow: Analog I/O Board #2 Enabled
Green: Digital I/O Enabled

Cooling (10°C Rise)
4.0l/s @0.5mm H_2O

Peak Current & Power Consumption

		+24	+5	-24
6060:	I_{Pm} (A)	1.0	1.99	0.80
	I_{Dm} (A)	0.31	0.38	0.19
6061:	I_{Pm} (A)	1.67	1.85	0.33
	I_{Dm} (A)	0.38	0.41	0.19

Total Power (6060): 53Watts
Total Power (6061): 57Watts

ENVIRONMENTAL

Temperature
Operating: 0°C-50°C

Weight
5.5lb. (2.5kg)

MTBF (@ 25°C)
56,000hours

EMC (Council Directive 89/336/EEC)
EN55022-B, EN50082-1

Safety (Low Voltage Directive 73/23/EEC)
EN6010-1, IEC1010-1, UL3111-1, CSA 22.2#1010

CE The CE Mark indicates that the product has completed and passed rigorous testing in the area of RF Emissions, Immunity to Electromagnetic Disturbances and complies with European electrical safety standards.

ORDERING INFORMATION

Model	Description	Part Number
6060A	8 Ch. A/D,8 Ch. D/A,32 Ch. Digital I/O	33-1010-WXYZ
6060B	16 Ch. D/A, 32 Ch. Digital I/O	33-1011-WXYZ
6060C	16 Ch. A/D, 32 Ch. Digital I/O	33-1012-WXYZ
6060D	32 Ch. Digital I/O	33-1013-WXYZ
6061A	8 Ch. A/D,8 Ch. D/A,32 Ch. Digital I/O, Isolated	33-1020-WXYZ
6061B	16 Ch. D/A, 32 Ch. Digital I/O, Isolated	33-1021-WXYZ
6061C	16 Ch. A/D, 32 Ch. Digital I/O, Isolated	33-1022-WXYZ
OPT. 01	Change Analog Input or Output Ranges (Max 16V)	1 (added to P/N)
OPT. 02	TTL Digital I/O (open collector)	2 (added to P/N)
OPT. 03	Current D/A Outputs (A/B models only)	3 (added to P/N)
OPT. 04	Additional 256kB of Trace Memory	4 (added to P/N)

where WXYZ are the options in ascending numerical order. Unused digits are zero.

WORLDWIDE SUPPORT

http://www.racalinst.com

LLOYD'S REGISTER QUALITY ASSURANCE ISO9001

VXI plug&play

For your local Racal Instruments Sales Office see page 173.

Artisan Technology Group - Quality Instrumentation ... Guaranteed | (888) 88-SOURCE | www.artisantg.com

Artisan Technology Group

Artisan Technology Group is your source for quality new and certified-used/pre-owned equipment

- FAST SHIPPING AND DELIVERY
- TENS OF THOUSANDS OF IN-STOCK ITEMS
- EQUIPMENT DEMOS
- HUNDREDS OF MANUFACTURERS SUPPORTED
- LEASING/MONTHLY RENTALS
- ITAR CERTIFIED SECURE ASSET SOLUTIONS

SERVICE CENTER REPAIRS
Experienced engineers and technicians on staff at our full-service, in-house repair center

InstraView℠ REMOTE INSPECTION
Remotely inspect equipment before purchasing with our interactive website at ***www.instraview.com*** ↗

WE BUY USED EQUIPMENT
Sell your excess, underutilized, and idle used equipment
We also offer credit for buy-backs and trade-ins
www.artisantg.com/WeBuyEquipment ↗

LOOKING FOR MORE INFORMATION?
Visit us on the web at ***www.artisantg.com*** ↗ for more information on price quotations, drivers, technical specifications, manuals, and documentation

Contact us: (888) 88-SOURCE | sales@artisantg.com | www.artisantg.com